AUTHENTICATED
U.S. GOVERNMENT
INFORMATION
GPO

Code of Federal Regulations

49

Parts 200 to 299

Revised as of October 1, 2008

Transportation

Containing a codification of documents of general applicability and future effect

As of October 1, 2008

With Ancillaries

Published by
Office of the Federal Register
National Archives and Records
Administration

A Special Edition of the Federal Register

U.S. GOVERNMENT OFFICIAL EDITION NOTICE

Legal Status and Use of Seals and Logos

The seal of the National Archives and Records Administration (NARA) authenticates the Code of Federal Regulations (CFR) as the official codification of Federal regulations established under the Federal Register Act. Under the provisions of 44 U.S.C. 1507, the contents of the CFR, a special edition of the Federal Register, shall be judicially noticed. The CFR is prima facie evidence of the original documents published in the Federal Register (44 U.S.C. 1510).

It is prohibited to use NARA's official seal and the stylized Code of Federal Regulations logo on any republication of this material without the express, written permission of the Archivist of the United States or the Archivist's designee. Any person using NARA's official seals and logos in a manner inconsistent with the provisions of 36 CFR part 1200 is subject to the penalties specified in 18 U.S.C. 506, 701, and 1017.

Use of ISBN Prefix

This is the Official U.S. Government edition of this publication and is herein identified to certify its authenticity. Use of the 0–16 ISBN prefix is for U.S. Government Printing Office Official Editions only. The Superintendent of Documents of the U.S. Government Printing Office requests that any reprinted edition clearly be labeled as a copy of the authentic work with a new ISBN.

U.S. GOVERNMENT PRINTING OFFICE

U.S. Superintendent of Documents • Washington, DC 20402–0001

http://bookstore.gpo.gov

Phone: toll-free (866) 512-1800; DC area (202) 512-1800

Table of Contents

	Page
Explanation	v
Title 49:	
Subtitle B—Other Regulations Relating to Transportation (Continued)	
Chapter II—Federal Railroad Administration, Department of Transportation	5
Finding Aids:	
Material Approved for Incorporation by Reference	947
Table of CFR Titles and Chapters	951
Alphabetical List of Agencies Appearing in the CFR	971
List of CFR Sections Affected	981

Cite this Code: CFR

To cite the regulations in this volume use title, part and section number. Thus, 49 CFR 200.1 *refers to title 49, part 200, section 1.*

Explanation

The Code of Federal Regulations is a codification of the general and permanent rules published in the Federal Register by the Executive departments and agencies of the Federal Government. The Code is divided into 50 titles which represent broad areas subject to Federal regulation. Each title is divided into chapters which usually bear the name of the issuing agency. Each chapter is further subdivided into parts covering specific regulatory areas.

Each volume of the Code is revised at least once each calendar year and issued on a quarterly basis approximately as follows:

Title 1 through Title 16.....as of January 1
Title 17 through Title 27.....as of April 1
Title 28 through Title 41.....as of July 1
Title 42 through Title 50.....as of October 1

The appropriate revision date is printed on the cover of each volume.

LEGAL STATUS

The contents of the Federal Register are required to be judicially noticed (44 U.S.C. 1507). The Code of Federal Regulations is prima facie evidence of the text of the original documents (44 U.S.C. 1510).

HOW TO USE THE CODE OF FEDERAL REGULATIONS

The Code of Federal Regulations is kept up to date by the individual issues of the Federal Register. These two publications must be used together to determine the latest version of any given rule.

To determine whether a Code volume has been amended since its revision date (in this case, October 1, 2008), consult the ''List of CFR Sections Affected (LSA),'' which is issued monthly, and the ''Cumulative List of Parts Affected,'' which appears in the Reader Aids section of the daily Federal Register. These two lists will identify the Federal Register page number of the latest amendment of any given rule.

EFFECTIVE AND EXPIRATION DATES

Each volume of the Code contains amendments published in the Federal Register since the last revision of that volume of the Code. Source citations for the regulations are referred to by volume number and page number of the Federal Register and date of publication. Publication dates and effective dates are usually not the same and care must be exercised by the user in determining the actual effective date. In instances where the effective date is beyond the cutoff date for the Code a note has been inserted to reflect the future effective date. In those instances where a regulation published in the Federal Register states a date certain for expiration, an appropriate note will be inserted following the text.

OMB CONTROL NUMBERS

The Paperwork Reduction Act of 1980 (Pub. L. 96–511) requires Federal agencies to display an OMB control number with their information collection request.

Many agencies have begun publishing numerous OMB control numbers as amendments to existing regulations in the CFR. These OMB numbers are placed as close as possible to the applicable recordkeeping or reporting requirements.

OBSOLETE PROVISIONS

Provisions that become obsolete before the revision date stated on the cover of each volume are not carried. Code users may find the text of provisions in effect on a given date in the past by using the appropriate numerical list of sections affected. For the period before January 1, 1986, consult either the List of CFR Sections Affected, 1949–1963, 1964–1972, or 1973–1985, published in seven separate volumes. For the period beginning January 1, 1986, a ''List of CFR Sections Affected'' is published at the end of each CFR volume.

INCORPORATION BY REFERENCE

What is incorporation by reference? Incorporation by reference was established by statute and allows Federal agencies to meet the requirement to publish regulations in the Federal Register by referring to materials already published elsewhere. For an incorporation to be valid, the Director of the Federal Register must approve it. The legal effect of incorporation by reference is that the material is treated as if it were published in full in the Federal Register (5 U.S.C. 552(a)). This material, like any other properly issued regulation, has the force of law.

What is a proper incorporation by reference? The Director of the Federal Register will approve an incorporation by reference only when the requirements of 1 CFR part 51 are met. Some of the elements on which approval is based are:

(a) The incorporation will substantially reduce the volume of material published in the Federal Register.

(b) The matter incorporated is in fact available to the extent necessary to afford fairness and uniformity in the administrative process.

(c) The incorporating document is drafted and submitted for publication in accordance with 1 CFR part 51.

Properly approved incorporations by reference in this volume are listed in the Finding Aids at the end of this volume.

What if the material incorporated by reference cannot be found? If you have any problem locating or obtaining a copy of material listed in the Finding Aids of this volume as an approved incorporation by reference, please contact the agency that issued the regulation containing that incorporation. If, after contacting the agency, you find the material is not available, please notify the Director of the Federal Register, National Archives and Records Administration, Washington DC 20408, or call 202-741-6010.

CFR INDEXES AND TABULAR GUIDES

A subject index to the Code of Federal Regulations is contained in a separate volume, revised annually as of January 1, entitled CFR INDEX AND FINDING AIDS. This volume contains the Parallel Table of Statutory Authorities and Agency Rules (Table I). A list of CFR titles, chapters, and parts and an alphabetical list of agencies publishing in the CFR are also included in this volume.

An index to the text of ''Title 3—The President'' is carried within that volume.

The Federal Register Index is issued monthly in cumulative form. This index is based on a consolidation of the ''Contents'' entries in the daily Federal Register.

A List of CFR Sections Affected (LSA) is published monthly, keyed to the revision dates of the 50 CFR titles.

REPUBLICATION OF MATERIAL

There are no restrictions on the republication of material appearing in the Code of Federal Regulations.

INQUIRIES

For a legal interpretation or explanation of any regulation in this volume, contact the issuing agency. The issuing agency's name appears at the top of odd-numbered pages.

For inquiries concerning CFR reference assistance, call 202–741–6000 or write to the Director, Office of the Federal Register, National Archives and Records Administration, Washington, DC 20408 or e-mail fedreg.info@nara.gov.

SALES

The Government Printing Office (GPO) processes all sales and distribution of the CFR. For payment by credit card, call toll-free, 866-512-1800, or DC area, 202-512-1800, M-F 8 a.m. to 4 p.m. e.s.t. or fax your order to 202-512-2250, 24 hours a day. For payment by check, write to: US Government Printing Office – New Orders, P.O. Box 979050, St. Louis, MO 63197-9000. For GPO Customer Service call 202-512-1803.

ELECTRONIC SERVICES

The full text of the Code of Federal Regulations, the LSA (List of CFR Sections Affected), The United States Government Manual, the Federal Register, Public Laws, Public Papers, Weekly Compilation of Presidential Documents and the Privacy Act Compilation are available in electronic format at *www.gpoaccess.gov/nara* (''GPO Access''). For more information, contact Electronic Information Dissemination Services, U.S. Government Printing Office. Phone 202-512-1530, or 888-293-6498 (toll-free). E-mail, *gpoaccess@gpo.gov*.

The Office of the Federal Register also offers a free service on the National Archives and Records Administration's (NARA) World Wide Web site for public law numbers, Federal Register finding aids, and related information. Connect to NARA's web site at *www.archives.gov/federal-register*. The NARA site also contains links to GPO Access.

RAYMOND A. MOSLEY,
Director,
Office of the Federal Register.
October 1, 2008.

THIS TITLE

Title 49—TRANSPORTATION is composed of nine volumes. The parts in these volumes are arranged in the following order: Parts 1–99, parts 100–185, parts 186–199, parts 200–299, parts 300–399, parts 400–599, parts 600–999, parts 1000–1199, part 1200 to End. The first volume (parts 1–99) contains current regulations issued under subtitle A—Office of the Secretary of Transportation; the second volume (parts 100–185) and the third volume (parts 186–199) contain the current regulations issued under chapter I—Pipeline and Hazardous Materials Safety Administration (DOT); the fourth volume (parts 200–299) contains the current regulations issued under chapter II—Federal Railroad Administration (DOT); the fifth volume (parts 300–399) contains the current regulations issued under chapter III—Federal Motor Carrier Safety Administration (DOT); the sixth volume (parts 400–599) contains the current regulations issued under chapter IV—Coast Guard (DHS), chapter V—National Highway Traffic Safety Administration (DOT); the seventh volume (parts 600–999) contains the current regulations issued under chapter VI—Federal Transit Administration (DOT), chapter VII—National Railroad Passenger Corporation (AMTRAK), and chapter VIII—National Transportation Safety Board; the eighth volume (parts 1000–1199) contains the current regulations issued under chapter X—Surface Transportation Board and the ninth volume (part 1200 to End) contains the current regulations issued under chapter X—Surface Transportation Board, chapter XI—Research and Innovative Technology Administration, and chapter XII—Transportation Security Administration, Department of Transportation. The contents of these volumes represent all current regulations codified under this title of the CFR as of October 1, 2008.

In the volume containing parts 100–185, see §172.101 for the Hazardous Materials Table. The Federal Motor Vehicle Safety Standards appear in part 571.

Redesignation tables for chapter III—Federal Motor Carrier Safety Administration, Department of Transportation and chapter XII—Transportation Security Administration, Department of Transportation appear in the Finding Aids section of the fifth and ninth volumes.

For this volume Rob Sheehan, was Chief Editor. The Code of Federal Regulations publication program is under the direction of Michael L. White, assisted by Ann Worley.

Title 49—Transportation

(This book contains parts 200 to 299)

Part

SUBTITLE B—OTHER REGULATIONS RELATING TO TRANSPORTATION (CONTINUED)

CHAPTER II—Federal Railroad Administration, Department of Transportation 200

Subtitle B—Other Regulations Relating to Transportation (Continued)

CHAPTER II—FEDERAL RAILROAD ADMINISTRATION, DEPARTMENT OF TRANSPORTATION

EDITORIAL NOTE: Nomenclature changes to chapter II appear at 69 FR 18803, Apr. 9, 2004.

Part		*Page*
200	Informal rules of practice for passenger service	7
201	Formal rules of practice for passenger service	9
207	Railroad police officers	15
209	Railroad safety enforcement procedures	16
210	Railroad noise emission compliance regulations	67
211	Rules of practice	73
212	State safety participation regulations	94
213	Track safety standards	104
214	Railroad workplace safety	158
215	Railroad freight car safety standards	187
216	Special notice and emergency order procedures: Railroad track, locomotive and equipment	202
217	Railroad operating rules	206
218	Railroad operating practices	212
219	Control of alcohol and drug use	238
220	Railroad communications	279
221	Rear end marking device—passenger, commuter and freight trains	287
222	Use of locomotive horns at public highway-rail grade crossings	292
223	Safety glazing standards—locomotives, passenger cars and cabooses	346
224	Reflectorization of rail freight rolling stock	352
225	Railroad accidents/incidents: Reports classification, and investigations	377
227	Occupational noise exposure	398
228	Hours of service of railroad employees	418
229	Railroad locomotive safety standards	431
230	Steam locomotive inspection and maintenance standards	478
231	Railroad safety appliance standards	543

Part		Page
232	Brake system safety standards for freight and other non-passenger trains and equipment; end-of-train devices	586
233	Signal systems reporting requirements	630
234	Grade crossing signal system safety	631
235	Instructions governing applications for approval of a discontinuance or material modification of a signal system or relief from the requirements of part 236	643
236	Rules, standards, and instructions governing the installation, inspection, maintenance, and repair of signal and train control systems, devices, and appliances	648
238	Passenger equipment safety standards	706
239	Passenger train emergency preparedness	802
240	Qualification and certification of locomotive engineers	813
241	United States locational requirement for dispatching of United States rail operations	861
244	Regulations on safety integration plans governing railroad consolidations, mergers, and acquisitions of control	868
245	Railroad user fees	874
250	Guarantee of certificates of trustees of railroads in reorganization	879
256	Financial assistance for railroad passenger terminals	884
260	Regulations governing loans and loan guarantees under the railroad rehabilitation and improvement financing program	894
261	Credit assistance for surface transportation projects	907
262	Implementation of program for capital grants for rail line relocation and improvement projects	907
265	Nondiscrimination in federally assisted railroad programs	911
266	Assistance to States for local rail service under section 5 of the Department of Transportation Act	922
268	Magnetic levitation transportation technology deployment program	937
269–299	[Reserved]	

PART 200—INFORMAL RULES OF PRACTICE FOR PASSENGER SERVICE

Sec.
200.1 General.
200.3 Definitions.
200.5 Applications.
200.7 Objections.
200.9 Hearings.
200.11 Orders, approvals, and determinations.
200.13 Publication.

AUTHORITY: Secs. 402(e) and 406 of Pub. L. 91–518, 84 Stat. 1327, as amended by sec. 10(2) of Pub. L. 93–146, 87 Stat. 548 and sec. 121 of Pub. L. 96–73, 93 Stat. 537 (45 U.S.C. 562(e), 566); 49 CFR 1.49.

SOURCE: 45 FR 64192, Sept. 29, 1980, unless otherwise noted.

§ 200.1 General.

This part prescribes procedures under which applications will be received and heard and by which rules and orders will be issued under subsection 402(e) and section 406 of the Rail Passenger Service Act (45 U.S.C. 562(e) and 566).

§ 200.3 Definitions.

(a) *Act* means the Rail Passenger Service Act (45 U.S.C. 500 *et seq.*).

(b) *Administrator* means the Federal Railroad Administrator, the Deputy Administrator of FRA, or the delegate of either.

(c) *Amtrak* means the National Railroad Passenger Corporation.

(d) *Amtrak trains* means trains operated by or on behalf of Amtrak.

(e) *Chief Counsel* means the Chief Counsel or Acting Chief Counsel of the FRA.

(f) *Downgrading of a facility* means a reduction in track classification as specified in FRA track safety standards (49 CFR part 213), or any other change in facilities which may increase the time required for a passenger train to operate over the route on which such facility is located.

(g) *Facility* means railroad tracks, right-of-way, fixed equipment and facilities, real-property appurtenant thereto, and includes signal systems, passenger station and repair tracks, station buildings, platforms, and adjunct facilities such as water, fuel, steam, electric, and air lines.

(h) *FRA* means the Federal Railroad Administration.

(i) *Railroad* means a person providing railroad transportation for compensation.

(j) *Shipper* means a person contracting with one or more railroads for freight transportation.

§ 200.5 Applications.

(a) Each application and objection under this part shall be submitted in writing to: Docket Clerk, Office of the Chief Counsel, Federal Railroad Administration, 400 7th Street, SW., Washington, DC 20590.

(b) Any procedural issues arising from the submission or consideration of applications under this part, such as timeliness and adequacy, shall be heard and decided by the Administration's panel established under § 200.9.

(c) Any railroad adversely affected by the preference requirement of subsection 402(e) of the Act may apply to the Administrator for an order altering that requirement. Each application shall:

(1) List by endpoints the routes that are so affected; and

(2) Explain for every route listed how the preference requirement of subsection 402(e) will materially lessen the quality of freight service afforded by the applicant to its shippers, including information, data or documents sufficient to support that explanation; and

(3) Include an analysis of whether and by how much Amtrak's compensation to the railroad should be reduced if the preference requirement is altered.

(d) In accordance with section 406 of the Act, any railroad may apply to the Administrator for approval to downgrade or dispose of its facilities. Each application shall:

(1) List the facilities for proposed downgrading or disposal;

(2) Describe and give the location of each such facility and identify the most recent passenger service that made use of such facilities; and

(3) Contain for each facility an analysis of the costs the railroad could avoid if it were not required to maintain or retain the facility in the condition requested by Amtrak, including

information, data and documents sufficient to support the analysis.

(e) In addition to the data provided with their applications, applicants shall furnish the Administrator with any other information that the Administrator finds necessary in order to make the determinations required by the Act.

(f) Each applicant shall promptly notify, by registered or certified mail, any party affected by any application, whether Amtrak or a railroad, of the submission of such application under this part, and shall provide a copy of the application with such notice. An official United States Postal Service receipt from the registered or certified mailing constitutes prima facie evidence of notice.

§ 200.7 Objections.

(a) Amtrak or any other party shall have 30 days from the date an application is received by FRA pursuant to section 402(e) of the Act to object to the proposed alteration of the preference requirement. Such objections shall be in writing and shall reference, by date, railroad, and former passenger routes, the application to which it pertains.

(b) Amtrak shall have 30 days from the date an application is received by FRA pursuant to section 406 of the Act to object to any or all of the facility downgradings or disposals proposed in such application. Such objections shall be in writing and shall reference, by date, railroad, and former passenger routes, the application to which it pertains and shall list, by facility description and location, the specific downgradings or disposals to which Amtrak objects.

§ 200.9 Hearings.

(a) Pursuant to any application under this part, a prehearing conference will be held if found necessary or desirable by the Administrator.

(b) Pursuant to any application under this part, an oral hearing will be held if required by statute or if found necessary or desirable by the Administrator.

(c) Hearings shall be conducted by a panel designated by the Administrator, consisting of three FRA employees, including the Chief Counsel or a member of his or her staff who shall serve as chairman of the panel and the Associate Administrator for Intercity Programs or his or her delegate.

(d) Hearings shall be informal fact-finding proceedings, limited to the issues identified by the panel. Sections 556 and 557 of title 5, U.S.C., shall not apply.

(e) All direct evidence shall be reduced to writing and submitted to the Docket Clerk thirty days in advance of the hearing unless this requirement is expressly waived by the panel. Copies shall be furnished to all parties concurrently with the submission to the Docket Clerk.

(f) The panel may provide for oral presentations and cross-examination, and shall apply rules of evidence as it finds necessary.

(g) To the extent deemed appropriate by the panel, interested persons, including members of the public, may participate in the hearings through the submission of written data, oral presentations, or arguments.

§ 200.11 Orders, approvals, and determinations.

(a) The Administrator shall promptly approve the downgrading or disposal of any facility to which Amtrak does not submit a timely objection under this part.

(b) Orders, approvals, and determinations issued by the Administrator's panel under this part constitute the Administrator's action and shall be final.

(c) Determinations under this part are not required to be based exclusively on the record of a hearing.

§ 200.13 Publication.

(a) General notice of any hearing under this subpart shall be published in the FEDERAL REGISTER not less than 10 days before the hearing, and shall include (1) a statement of the time, place, and nature of the hearing, (2) a reference to the legal authority under which the hearing is being held and (3) a description of the subject and issues involved.

(b) Any order, approval, or determination resulting from any hearing

held under this part shall be published in the FEDERAL REGISTER.

PART 201—FORMAL RULES OF PRACTICE FOR PASSENGER SERVICE

Sec.
201.1 General.
201.3 Definitions.
201.4 Scope of regulations.
201.5 Applications.
201.6 Notice of hearing.
201.7 Notification by interested persons.
201.8 Presiding officer.
201.9 Direct testimony submitted as written documents.
201.10 Mailing address.
201.11 Inspection and copying of documents.
201.12 Ex parte communications.
201.13 Prehearing conference.
201.14 Final agenda of the hearing.
201.15 Determination to cancel the hearing.
201.16 Rebuttal testimony and new issues of fact in final agenda.
201.17 Waiver of right to participate.
201.18 Conduct of the hearing.
201.19 Direct testimony.
201.20 Cross-examination.
201.21 Oral and written arguments.
201.22 Recommended decision, certification of the transcript, and submission of comments on the recommended decision.
201.23 Administrator's decision.

AUTHORITY: Secs. 402(f) and (h) of Pub. L. 91–518, 84 Stat. 1327, as amended by sec. 10(2) of Pub. L. 93–146, 87 Stat. 548 and sec. 216 of Pub. L 96–254, 94 Stat. 418 (45 U.S.C. 562 (f) and (h)); sec. 1.49 of Title 49, Code of Federal Regulations.

SOURCE: 46 FR 2614, Jan. 12, 1981, unless otherwise noted.

§ 201.1 General.

This part prescribes procedures under which applications will be received and heard and by which rules and orders will be issued under subsections 402(f) and (h) of the Rail Passenger Service Act (45 U.S.C. 562 (f) and (h)).

§ 201.3 Definitions.

(a) The definitions set forth in § 200.3 shall apply to this part.

(b) The following definitions shall also apply to this part:

(1) *Party* means—

(i) The Administrator or his representative; or

(ii) A person who has notified the Administrator by specified dates of his or her intent to participate in the hearing pursuant to §§ 201.7 and 201.16(b).

(2) *Witness* means any person who submits written direct testimony on an application to the Secretary under this part. A person may be both a party and a witness.

§ 201.4 Scope of regulations.

The procedural regulations in this part govern the practice and procedure in hearings held under subsections 402(f) and (h) of the Act. These hearings will be governed by the provisions of 5 U.S.C. 556 and 557 of the Administrative Procedure Act. The regulations shall be construed to secure the just, speedy, and inexpensive determination of all issues raised with respect to any proposal to increase speeds or to add trains pursuant to subsections 402(f) and (h) of the Act with full protection for the rights of all persons affected thereby.

§ 201.5 Applications.

(a) Each application and objection under this part shall be submitted in writing to: Docket Clerk, Office of the Chief Counsel, Federal Railroad Administration, 400 7th Street, SW., Washington, DC 20590.

(b) Any procedural issues arising from the submission or consideration of applications under this part, such as timeliness and adequacy, shall be heard and decided by the presiding officer appointed under § 201.8.

(c) In accordance with subsection 402(f) of the Act, Amtrak may apply to the Administrator for an order requiring a railroad to permit accelerated speeds by Amtrak trains. Each application shall:

(1) List by endpoints the routes for which Amtrak desires such acceleration;

(2) Not list routes of more than one railroad;

(3) Indicate by route and train the maximum speeds for Amtrak trains permitted by the railroad and the maximum speeds desired by Amtrak;

(4) Indicate for each route listed the track classification as specified in FRA track safety standards (49 CFR part 213); and

(5) Explain why the maximum speeds Amtrak desires are safe and practicable, or what track, signal system, or other facility improvements would make such speeds safe and practicable.

(d) In accordance with subsection 402(h) of the Act, Amtrak may apply to the Administrator for an order to require a railroad to permit or provide the operation of additional passenger trains on its rail lines. Each application shall:

(1) List the railroad, the endpoints of the proposed additional train or trains, and the proposed schedule for such additional train or trains, and

(2) Describe and give the background of all prior efforts and negotiations to obtain a satisfactory voluntary agreement with the railroad for the operation of the proposed additional train or trains.

(e) In addition to the data provided with their applications, applicants shall furnish the Administrator with any other information that the Administrator finds necessary in order to make the determinations required by the Act.

(f) Each applicant shall promptly notify, by registered or certified mail, any party affected by any application, whether Amtrak or a railroad, of the submission of each application under this part, and shall provide a copy of the application with such notice. An official U. S. Postal Service return receipt from the registered or certified mailing constitutes prima facie evidence of notice.

§ 201.6 Notice of hearing.

(a) A notice of hearing on an application shall be published in the FEDERAL REGISTER.

(b) The notice shall state:

(1) The nature of the hearing;

(2) The place and date of the hearing. The date shall not be less than 60 days after publication of notice of the hearing;

(3) The legal authority under which the hearing is to be held;

(4) Issues of fact which may be involved in the hearing;

(5) If a draft Environmental Impact Statement is required, the date of publication of the draft and the place(s) where the draft and comments thereon may be viewed and copied;

(6) The place(s) where records and submitted direct testimony will be kept for public inspection;

(7) The final date for filing a notice of intent to participate in the hearing;

(8) The final date for submission of direct testimony on the application, and the number of copies required;

(9) The docket number assigned to the case, which shall be used in all subsequent proceedings; and

(10) The place and date of the prehearing conference.

§ 201.7 Notification by interested persons.

Any person desiring to participate as a party shall notify the Administrator, by registered or certified mail, on or before the date specified in the notice.

§ 201.8 Presiding officer.

(a) Upon publication of the notice of hearing pursuant to § 201.6, the Administrator shall appoint a presiding officer pursuant to 5 U.S.C. 3105. No individual who has any conflict of interest, financial or otherwise, shall serve as presiding officer in such proceeding.

(b) The presiding officer, in any proceeding under this part, shall have power to:

(1) Change the time and place of the hearing and adjourn the hearing;

(2) Evaluate direct testimony submitted pursuant to these regulations, make a preliminary determination of the issues, conduct a prehearing conference to determine the issues for the hearing agenda, and cause to be published in the FEDERAL REGISTER a final hearing agenda;

(3) Rule upon motions, requests, and admissibility of direct testimony;

(4) Administer oaths and affirmations, question witnesses, and direct witnesses to testify;

(5) Modify or waive any rule (after notice) upon determining that no party will be prejudiced;

(6) Receive written comments and hear oral agruments;

(7) Render a recommended decision; and

(8) Do all acts and take all measures, including regulation of media coverage, for the maintenance of order at

and the efficient conduct of the proceeding.

(c) In case of the absence of the original presiding officer or his inability to act, the Administrator may assign to a successor the powers and duties of the original presiding officer without abatement of the proceeding unless otherwise ordered by the Administrator.

(d) The presiding officer may upon his own motion withdraw as presiding officer in a proceeding if he deems himself to be disqualified.

(e) A presiding officer may be requested to withdraw at any time prior to the recommended decision. Upon the filing by an interested person in good faith of a timely and sufficient affidavit alleging the presiding officer's personal bias, malice, conflict of interest, or other basis which might result in prejudice to a party, the hearing shall recess. The Administrator shall immediately act upon such allegation as a part of the record and decision in the proceeding, after making such investigation or holding such hearings, or both, as he may deem appropriate in the circumstances.

§ 201.9 Direct testimony submitted as written documents.

(a) Unless otherwise specified, all direct testimony, including accompanying exhibits, shall be submitted to the presiding officer in writing no later than the dates specified in the notice of the hearing, the final hearing agenda, or within 15 days after the conclusion of the prehearing conference, as the case may be. All direct testimony shall be in affidavit form, and exhibits constituting part of such testimony, referred to in the affidavit and made a part thereof, shall be attached to the affidavit. Direct testimony submitted with exhibits shall state the issue to which the exhibit relates; if no such statement is made, the presiding officer shall determine the relevance of the exhibit to the issues published in the FEDERAL REGISTER.

(b) The direct testimony submitted shall contain:

(1) A concise statement of the witness' interest in the proceeding and his position regarding the issues presented. If the direct testimony is presented by a witness who is not a party, the witness shall state his relationship to the party;

(2) Facts that are relevant and material; and

(3) Any proposed issues of fact not stated in the notice of the hearing and the reason(s) why such issues should be considered at the hearing.

(c) Ten copies of all direct testimony shall be submitted unless the notice of the hearing specifies otherwise.

(d) Upon receipt, direct testimony shall be assigned a number and stamped with that number and the docket number.

(e) Contemporaneous with the publication of the notice of hearing, Amtrak's direct testimony in support of its application shall be available for public inspection as specified in the notice of hearing. Amtrak may submit additional direct testimony during the time periods allowed for submission of such testimony by witnesses.

§ 201.10 Mailing address.

Unless otherwise specified in the notice of hearing, all direct testimony shall be addressed to the Docket Clerk, Office of the Chief Counsel, Federal Railroad Administration, 400 7th Street, SW., Washington, DC 20590. All affidavits and exhibits shall be clearly marked with the docket number of the proceeding.

§ 201.11 Inspection and copying of documents.

(a) If confidential financial information is not involved, any document in a file pertaining to any hearing authorized by this part or any document forming part of the record of such a hearing may be inspected or copied in the Office of the Chief Counsel, Federal Railroad Administration, 400 7th Street, SW., Washington, DC 20590, unless the file is in the care and custody of the presiding officer in which case he shall notify the parties as to where and when the record may be inspected.

(b) If confidential financial information is involved, the presiding officer, at his discretion, upon the request of any party, may deny the public inspection and copying of such information.

§ 201.12 Ex parte communications.

(a) After notice of a hearing is published in the FEDERAL REGISTER, all communications, whether oral or written, involving any substantive or procedural issue and directed either to the presiding officer or to the Administrator, without reference to these rules of procedure, shall be deemed ex parte communications and shall not be considered part of the record for decision. A record of oral ex parte communications shall be made by the persons contacted. All written ex parte communications shall be available for public viewing at the places(s) specified in the notice of hearing.

(b) The presiding officer shall not consult any person or party on any fact in issue or on the merits of the matter unless notice and opportunity is given for all parties to participate.

§ 201.13 Prehearing conference.

(a) After an examination of all the direct testimony submitted, the presiding officer shall make a preliminary determination of issues of fact to be addressed at the hearing.

(b) The presiding officer's preliminary determination shall be made available at the place or places provided in the notice of the hearing at least five days before the prehearing conference is held.

(c) The purpose of the prehearing conference shall be to enable the presiding officer to determine, on the basis of the direct testimony submitted and prehearing discussions:

(1) Whether the presiding officer's preliminary determination of issues of fact for the hearing has omitted or misconstrued any significant issues, and

(2) The nature of the interest of each party and which parties' interests are adverse.

(d) Only parties may participate in the prehearing conference. A party may appear in person or be represented by counsel.

(e) Parties who do not appear at the prehearing conference shall be bound by the conference's determinations.

§ 201.14 Final agenda of the hearing.

(a) After the prehearing conference, the presiding officer shall prepare a final agenda which shall be published in the FEDERAL REGISTER within ten days after the conclusion of the conference. A copy of the final agenda shall be mailed to all parties.

(b) The final agenda shall list:

(1) All the issues the hearing shall address, the order in which those issues shall be presented, and the direct testimony submitted on those issues; and

(2) A final date for submission of direct testimony on issues of fact not included in the notice of hearing if such issues are presented.

The final agenda may also specify a final date for submission of direct testimony to rebut testimony previously submitted during the time specified in the notice of the hearing.

(c) The presiding officer shall publish with the final agenda a list of witnesses who may appear at the hearing, a list of parties, the nature of the interest of each party, and which parties' interests are adverse on the issues presented.

§ 201.15 Determination to cancel the hearing.

(a) If the presiding officer concludes that no issues of fact are presented by the direct testimony submitted, he shall publish such conclusion in the FEDERAL REGISTER with a notice that a hearing shall not be held. The notice shall set forth a date for filing written comments on the proposed recommended decision. Written comments may include proposed findings and conclusions, arguments, or briefs.

(b) A person need not be a party to submit written comments.

(c) Promptly after expiration of the period for receiving written comments, the presiding officer shall make a recommended decision based on the record, which in this case shall consist of the testimony, exhibits, and written comments submitted. He shall transfer to the Administrator his recommended decision, the record, and a certificate stating that the record contains all the written direct testimony and comments submitted. The Administrator shall then make a final decision in accordance with these regulations.

§ 201.16 Rebuttal testimony and new issues of fact in final agenda.

(a) Direct testimony to rebut testimony offered during the time period specified in the notice of hearing may be submitted pursuant to these regulations within fifteen days after the conclusion of the prehearing conference unless the presiding officer otherwise specifies in the final agenda.

(b) If the final agenda presents issues not included in the notice of the hearing published pursuant to § 201.6,

(1) Any person interested in participating at the hearing on such issues presented shall notify the Administrator by certified mail of an intent to participate not later than ten days after publication of the final agenda. Such person may present direct testimony or cross-examine witnesses only on such issues presented unless he previously notified the Administrator pursuant to § 201.7, and

(2) Additional written direct testimony concerning such issues may be submitted within the time provided in the final agenda. Such direct testimony will comply with the requirements of § 201.9.

§ 201.17 Waiver of right to participate.

Persons who fail to notify the Administrator pursuant to §§ 201.7 and 201.16 shall be deemed to have waived their right to participate as parties in any part of the hearing.

§ 201.18 Conduct of the hearing.

(a) The hearing shall be held at the time and place fixed in the notice of hearing, unless the presiding officer changes the time or place. If a change occurs, the presiding officer shall publish the change in the FEDERAL REGISTER and shall expeditiously notify all parties by telephone or by mail; *provided*, that if the change in time or place of hearing is made less than five days before the date previously fixed for the hearing, the presiding officer shall also announce, or cause to be announced, the change at the time and place previously fixed for the hearing.

(b) The presiding officer shall, at the commencement of the hearing, introduce into the record. The notice of hearing as published in the FEDERAL REGISTER; all subsequent notices published in the FEDERAL REGISTER; the draft Environmental Impact Statement if it is required, and the comments thereon and agency responses to the comments; and a list of all parties. Direct testimony shall then be received with respect to the matters specified in the final agenda in such order as the presiding officer shall announce. With respect to direct testimony submitted as rebuttal testimony or in response to new issues presented by the prehearing conference, the presiding officer shall determine the relevance of such testimony.

(c) The hearing shall be publicly conducted and reported verbatim by an offical reporter.

(d) If a party objects to the admission or rejection of any direct testimony or to any other ruling of the presiding officer during the hearing, he shall state briefly the grounds of such objection, whereupon an automatic exception will follow if the objection is overruled by the presiding officer. The transcript shall not include argument or debate thereon except as ordered by the presiding officer. The ruling of the presiding officer on any objection shall be a part of the transcript and shall be subject to review at the same time and in the same manner as the Administrator's final decision. Only objections made before the presiding officer may subsequently be relied upon in the proceedings.

(e) All motions and requests shall be addressed to, and ruled on by, the presiding officer if made prior to his certification of the transcript, or by the Administrator if made thereafter.

§ 201.19 Direct testimony.

(a) Direct testimony shall be submitted by affidavit as provided in these regulations and introduced at the hearing by a witness in order to be considered part of the record. Such direct testimony shall not be read into evidence but shall become a part of the record subject to exclusion of irrelevant and immaterial parts thereof.

(b) The witness introducing direct testimony shall:

(1) State his name, address, and occupation;

(2) State his qualifications for introducing the direct testimony. If an expert, the witness shall briefly state the scientific or technical training that qualifies him as an expert;

(3) Identify the direct testimony previously submitted in accordance with these regulations; and

(4) Submit to appropriate direct and cross examination. Cross-examination shall be by a party whose interests are adverse to those of the witness on the issue presented if the witness is a party, or adverse to the interests of the party who presented the witness if the witness is not a party.

(c) A party shall be deemed to have waived the right to introduce direct testimony if such party fails to present a witness to introduce the direct testimony.

(d) Offical notice may be taken of such matters as are judicially noticed by the courts of the United States, *provided*, that parties shall be given adequate notice by the presiding officer at the hearing of matters so noticed and shall be given adequate opportunity to show that such facts are inaccurate or are erroneously noticed.

§ 201.20 Cross-examination.

(a) The presiding officer may:

(1) Require the cross-examiner to outline the intended scope of the cross-examination;

(2) Prohibit parties from cross-examining witnesses unless the presiding officer has determined that the cross-examiner has an adverse interest on the facts at issue to the party-witness. For the purposes of this subsection, the Administrator's or his representative's interest shall be considered adverse to all parties;

(3) Limit the number of times any party or parties having a common interest may cross-examine an ''adverse'' witness on the same matter; and

(4) Exclude cross-examination questions that are immaterial, irrelevant, or unduly repetitious.

(b) Any party shall be given an opportunity to appear, either in person or through an authorized counsel or representative, to cross-examine witnesses. Before cross-examining a witness, the party or counsel shall state his name, address, and occupation. If counsel cross-examines the witness, counsel shall state for the record the authority to act as counsel. Cross-examiners shall be assumed to be familiar with the direct testimony.

(c) Any party or party's counsel who fails to appear at the hearing to cross-examine an ''adverse'' witness shall be deemed to have waived the right to cross-examine that witness.

(d) Scientific, technical, or commercial publications may be used only for the limited purpose of impeaching witnesses under cross-examination unless previously submitted and introduced in accordance with these regulations.

§ 201.21 Oral and written arguments.

(a) The presiding officer may, in his discretion, provide for oral argument at the end of the hearing. Such argument, when permitted, may be limited by the presiding officer to the extent necessary for the expeditious disposition of the proceeding.

(b) The presiding officer shall announce at the hearing a reasonable period of time within which any interested person may file with the presiding officer any written comments on the application, including proposed findings and conclusions or written arguments or brief based upon the record, citing where practicable the relevant page or pages of the transcript. If a party filing a brief desires the presiding officer to reconsider any objection made by such party to a ruling of the presiding officer, he shall specifically identify such rulings by reference to the pertinent pages of the transcript and shall state his arguments thereon as a part of the brief.

(c) Oral or written arguments shall be limited to issues arising from direct testimony on the record.

§ 201.22 Recommended decision, certification of the transcript, and submission of comments on the recommended decision.

(a) Promptly after expiration of the period for receiving written briefs, the presiding officer shall make a recommended decision based on the record and transmit the decision to the Administrator. The recommended decision shall include:

(1) A statement containing a description of the history of the proceedings;

(2) Findings on issues of fact with the reasons therefor; and

(3) Rulings on issues of law.

(b) The presiding officer shall also transmit to the Administrator the transcript of the hearing, the original and all copies of the direct testimony, and written comments. The presiding officer shall attach to the original transcript of the hearing a certificate stating that, to the best of his knowledge and belief, the transcript is a true transcript of the testimony given at the hearing except in such particulars as are specified.

(c) Immediately after receipt of the recommended decision, the Administrator shall give notice thereof in the FEDERAL REGISTER, send copies of the recommended decision to all parties, and provide opportunity for the submission of comments. The recommended decision may be reviewed and/or copied in the Office of the Chief Counsel, Federal Railroad Administration, 400 7th Street, SW., Washington, DC 20590.

(d) Within twenty days after the notice of receipt of the recommended decision has been published in the FEDERAL REGISTER, any interested person may file with the Administrator any written comments on the recommended decision. All comments shall be submitted during the twenty-day period to the Administrator at the above address.

§ 201.23 Administrator's decision.

(a) Upon receipt of the recommended decision and transcript and after the twenty-day period for receiving written comments on the recommended decision has passed, the Administrator's decision may affirm, modify, or set aside, in whole or in part, the recommended findings, conclusions, and decision of the presiding officer. The Administrator may also remand the hearing record to the presiding officer for a fuller development of the record.

(b) The Administrator's decision shall include:

(1) A statement containing a description of the history of the proceeding;

(2) Findings on issues of fact with the reasons therefor; and

(3) Rulings on issues of law.

(c) The Administrator's decision shall be published in the FEDERAL REGISTER. If the Amtrak application is approved in whole or in part, the final order shall be promulgated with the decision.

PART 207—RAILROAD POLICE OFFICERS

Sec.

207.1 Application.
207.2 Definitions.
207.3 Designation and commissioning.
207.4 Notice to State officials.
207.5 Authority in States where officer not commissioned.

AUTHORITY: 45 U.S.C. 446; 49 CFR 1.49(ff).

SOURCE: 59 FR 6587, Feb. 11, 1994, unless otherwise noted.

§ 207.1 Application.

This part applies to all railroads, as such term is defined in section 202(e) of the Federal Railroad Safety Act of 1970, as amended, Public Law 91–458 (45 U.S.C. 431(e)).

§ 207.2 Definitions.

As used in this part:

(a) *Railroad police officer* means a peace officer who is commissioned in his or her state of legal residence or state of primary employment and employed by a railroad to enforce state laws for the protection of railroad property, personnel, passengers, and/or cargo.

(b) *Commissioned* means that a state official has certified or otherwise designated a railroad employee as qualified under the licensing requirements of that state to act as a railroad police officer in that state.

(c) *Property* means rights-of-way, easements, appurtenant property, equipment, cargo, facilities, and buildings and other structures owned, leased, operated, maintained, or transported by a railroad.

§ 207.3 Designation and commissioning.

(a) A railroad may designate employees to be commissioned by a state authority as railroad police officers to serve in the states in which the railroad owns property.

(b) The designated railroad police officer shall be commissioned by the railroad police officer's state of legal residence or the railroad police officer's state of primary employment.

§ 207.4 Notice to State officials.

(a) After the designated railroad police officer is commissioned by a state or states, the railroad shall send, by certified mail, written notice to appropriate officials of every other state in which the railroad police officer shall protect the railroad's property, personnel, passengers, and cargo. The notice of commission shall contain the following information:

(1) The name of the railroad police officer;

(2) The badge number, identification number, rank, code, or other identifying information assigned to the railroad police officer;

(3) The date of commission;

(4) The state or states where the railroad police officer is commissioned;

(5) The date the railroad police officer received training or retraining regarding the laws of such state or states;

(6) The name of the railroad official who designated the employee as a railroad police officer; and

(7) Color photographs of the types of badges, identification cards, and other identifying materials the railroad uses to identify its railroad police officers.

(b) The railroad shall keep copies of all such notices at a central location.

(c) The authority set forth in § 207.5 shall be effective upon receipt by such state(s) of written notice conforming to the requirements of this section.

§ 207.5 Authority in States where officer not commissioned.

(a) A railroad police officer who is designated by a railroad and commissioned under the laws of any state is authorized to enforce the laws (as specified in paragraph (b) of this section) of any state in which the railroad owns property and to which the railroad has provided notice in accordance with § 207.4.

(b) Under the authority of paragraph (a) of this section, a railroad police officer may enforce only relevant laws for the protection of—

(1) The railroad's employees, passengers, or patrons;

(2) The railroad's property or property entrusted to the railroad for transportation purposes;

(3) The intrastate, interstate, or foreign movement of cargo in the railroad's possession or in possession of another railroad or non-rail carrier while on the railroad property; and

(4) The railroad movement of personnel, equipment, and materials vital to the national defense.

(c) The authority exercised under this part by an officer for whom the railroad has provided notice in accordance with § 207.4 shall be the same as that of a railroad police officer commissioned under the laws of that state.

(d) The railroad police officer's law enforcement powers shall apply only on railroad property, except that an officer may pursue off railroad property a person suspected of violating the law on railroad property, and an officer may engage off railroad property in law enforcement activities, including, without limitation, investigation and arrest, if permissible under state law.

PART 209—RAILROAD SAFETY ENFORCEMENT PROCEDURES

Subpart A—General

Sec.
209.1 Purpose.
209.3 Definitions.
209.5 Service.
209.6 Requests for admission.
209.7 Subpoenas; witness fees.
209.8 Depositions in formal proceedings.
209.9 Filing.
209.11 Request for confidential treatment.
209.13 Consolidation.
209.15 Rules of evidence.
209.17 Motions.

Subpart B—Hazardous Materials Penalties

CIVIL PENALTIES

209.101 Civil penalties generally.
209.103 Minimum and maximum penalties.
209.105 Notice of probable violation.
209.107 Reply.
209.109 Payment of penalty; compromise.
209.111 Informal response and assessment.
209.113 Request for hearing.
209.115 Hearing.
209.117 Presiding officer's decision.
209.119 Assessment considerations.
209.121 Appeal.

CRIMINAL PENALTIES

209.131 Criminal penalties generally.
209.133 Referral for prosecution.

Subpart C—Compliance Orders

209.201 Compliance orders generally.
209.203 Notice of investigation.
209.205 Reply.
209.207 Consent order.
209.209 Hearing.
209.211 Presiding officer's decision.
209.213 Appeal.
209.215 Time limitation.

Subpart D—Disqualification Procedures

209.301 Purpose and scope.
209.303 Coverage.
209.305 Notice of proposed disqualification.
209.307 Reply.
209.309 Informal response.
209.311 Request for hearing.
209.313 Discovery.
209.315 Subpoenas.
209.317 Official record.
209.319 Prehearing conference.
209.321 Hearing.
209.323 Initial decision.
209.325 Finality of decision.
209.327 Appeal.
209.329 Assessment considerations.
209.331 Enforcement of disqualification order.
209.333 Prohibitions.
209.335 Penalties.
209.337 Information collection.

Subpart E—Reporting of Remedial Actions

209.401 Purpose and scope.
209.403 Applicability.
209.405 Reporting of remedial actions.
209.407 Delayed reports.
209.409 Penalties.

APPENDIX A TO PART 209—STATEMENT OF AGENCY POLICY CONCERNING ENFORCEMENT OF THE FEDERAL RAILROAD SAFETY LAWS

APPENDIX B TO PART 209—FEDERAL RAILROAD ADMINISTRATION GUIDELINES FOR INITIAL HAZARDOUS MATERIALS ASSESSMENTS

APPENDIX C TO PART 209—FRA'S POLICY STATEMENT CONCERNING SMALL ENTITIES

AUTHORITY: 49 U.S.C. 5123, 5124, 20103, 20107, 20111, 20112, 20114; 28 U.S.C. 2461, note; and 49 CFR 1.49.

SOURCE: 42 FR 56742, Oct. 28, 1977, unless otherwise noted.

Subpart A—General

§ 209.1 Purpose.

Appendix A to this part contains a statement of agency policy concerning enforcement of those laws. This part describes certain procedures employed by the Federal Railroad Administration in its enforcement of statutes and regulations related to railroad safety. By delegation from the Secretary of Transportation, the Administrator has responsibility for:

(a) Enforcement of subchapters B and C of chapter I, subtitle B, title 49, CFR, with respect to the transportation or shipment of hazardous materials by railroad (49 CFR 1.49(s));

(b) Exercise of the authority vested in the Secretary by the Federal Railroad Safety Act of 1970, 45 U.S.C. 421, 431–441, as amended by the Rail Safety Improvement Act of 1988, Public Law 100–342 (June 22, 1988) (49 CFR 1.49(m)); and

(c) Exercise of the authority vested in the Secretary pertaining to railroad safety as set forth in the statutes transferred to the Secretary by section 6(e) of the Department of Transportation Act, 49 App. U.S.C. 1655(e) (49 CFR 1.49 (c), (d), (f), and (g)).

[42 FR 56742, Oct. 28, 1977, as amended at 53 FR 52920, Dec. 29, 1988; 54 FR 42905, Oct. 18, 1989]

§ 209.3 Definitions.

As used in this part—

Administrator means the Administrator of FRA, the Deputy Administrator of FRA, or the delegate of either.

Chief Counsel means the Chief Counsel of FRA or his or her delegate.

Day means calendar day.

Federal hazardous material transportation law means 49 U.S.C. 5101 *et seq.*

Federal railroad safety laws means the provisions of law generally at 49 U.S.C. subtitle V, part A or 49 U.S.C. chap. 51 or 57 and the rules, regulations, orders, and standards issued under any of those provisions. See Pub. L. 103–272 (1994). Before recodification, these statutory provisions were contained in the following statutes: (i) the Federal Railroad Safety Act of 1970 (Safety Act) (49 U.S.C. 20101–20117, 20131, 20133–20141, 20143, 21301, 21302, 21304, 21311, 24902, and 24905, and sections 4(b)(1), (i), and (t) of Pub. L. 103–272, formerly codified at 45 U.S.C. 421, 431 *et seq.*); (ii) the Hazardous Materials Transportation Act

(Hazmat Act) (49 U.S.C. 5101 *et seq.*, formerly codified at 49 App. U.S.C. 1801 *et seq.*); (iii) the Sanitary Food Transportation Act of 1990 (SFTA) (49 U.S.C. 5713, formerly codified at 49 App. U.S.C. 2801 (note)); and those laws transferred to the jurisdiction of the Secretary of Transportation by subsection (e)(1), (2), and (6)(A) of section 6 of the Department of Transportation Act (DOT Act), as in effect on June 1, 1994 (49 U.S.C. 20302, 21302, 20701–20703, 20305, 20502–20505, 20901, 20902, and 80504, formerly codified at 49 App. U.S.C. 1655(e)(1), (2), and (6)(A)). 49 U.S.C. 20111 and 20109, formerly codified at 45 U.S.C. 437 (note) and 441(e). Those laws transferred by the DOT Act include, but are not limited to, the following statutes: (i) the Safety Appliance Acts (49 U.S.C. 20102, 20301, 20302, 20304, 21302, and 21304, formerly codified at 45 U.S.C. 1–14, 16); (ii) the Locomotive Inspection Act (49 U.S.C. 20102, 20701–20703, 21302, and 21304, formerly codified at 45 U.S.C. 22–34); (iii) the Accident Reports Act (49 U.S.C. 20102, 20701, 20702, 20901–20903, 21302, 21304, and 21311, formerly codified at 45 U.S.C. 38–43); (iv) the Hours of Service Act (49 U.S.C. 20102, 21101–21107, 21303, and 21304, formerly codified at 45 U.S.C. 61–64b); and (v) the Signal Inspection Act (49 U.S.C. 20102, 20502–20505, 20902, 21302, and 21304, formerly codified at 49 App. U.S.C. 26).

FRA means the Federal Railroad Administration, U.S. Department of Transportation.

FRA Safety Inspector means an FRA safety inspector, a state inspector participating in railroad safety investigative and surveillance activities under part 212 of this chapter, or any other official duly authorized by FRA.

Motion means a request to a presiding officer to take a particular action.

Person generally includes all categories of entities covered under 1 U.S.C. 1, including but not limited to the following: a railroad; any manager, supervisor, official, or other employee or agent of a railroad; any owner, manufacturer, lessor, or lessee of railroad equipment, track, or facilities; any independent contractor providing goods or services to a railroad; and any employee of such owner, manufacturer, lessor, lessee, or independent contractor; however, *person,* when used to describe an entity that FRA alleges to have committed a violation of the provisions of law formerly contained in the Hazardous Materials Transportation Act or contained in the Hazardous Materials Regulations, has the same meaning as in 49 U.S.C. 5102(9) (formerly codified at 49 App. U.S.C. 1802(11)), *i.e.*, an individual, firm, copartnership, corporation, company, association, joint-stock association, including any trustee, receiver, assignee, or similar representative thereof, or government, Indian tribe, or authority of a government or tribe when offering hazardous material for transportation in commerce or transporting hazardous material to further a commercial enterprise, but such term does not include the United States Postal Service or, for the purposes of 49 U.S.C. 5123–5124 (formerly contained in sections 110 and 111 of the Hazardous Materials Transportation Act and formerly codified at 49 App. U.S.C. 1809–1810), a department, agency, or instrumentality of the Federal Government.

Pleading means any written submission setting forth claims, allegations, arguments, or evidence.

Presiding Officer means any person authorized to preside over any hearing or to make a decision on the record, including an administrative law judge.

Railroad means any form of nonhighway ground transportation that runs on rails or electro-magnetic guideways, including (i) commuter or other short-haul railroad passenger service in a metropolitan or suburban area and commuter railroad service that was operated by the Consolidated Rail Corporation on January 1, 1979; and (ii) high speed ground transportation systems that connect metropolitan areas, without regard to whether those systems use new technologies not associated with traditional railroads; but does not include rapid transit operations in an urban area that are not connected to the general railroad system of transportation.

Respondent means a person upon whom FRA has served a notice of probable violation, notice of investigation, or notice of proposed disqualification.

[59 FR 43676, Aug. 24, 1994, as amended at 71 FR 77294, Dec. 26, 2006]

§ 209.5 Service.

(a) Each order, notice, or other document required to be served under this part shall be served personally or by registered or certified mail, except as otherwise provided herein.

(b) Service upon a person's duly authorized representative constitutes service upon that person.

(c) Service by registered or certified mail is complete upon mailing. An official United States Postal Service receipt from the registered or certified mailing constitutes prima facie evidence of service.

(d) Service of requests for admission and motions may be made by first-class mail, postage prepaid.

(e) Each pleading must be accompanied by a certificate of service specifying how and when service was made.

[42 FR 56742, Oct. 28, 1977, as amended at 54 FR 42906, Oct. 18, 1989]

§ 209.6 Requests for admission.

(a) A party to any proceeding under subpart B, C, or D of this part may serve upon any other party written requests for the admission of the genuineness of any relevant documents identified within the request, the truth of any relevant matters of fact, and the application of law to the facts as set forth in the request.

(b) Each matter of which an admission is requested shall be deemed to be admitted unless, within 30 days after receipt of the request, the party to whom the request is directed serves upon the party requesting the admission a written answer under oath or objection addressed to the matter, signed by the party.

(c) The sworn answer shall specifically admit or deny the matter or set forth in detail the reasons why the answering party cannot truthfully admit or deny the matter. If an objection is made, the reasons therefor shall be stated.

(d) Any matter admitted under this section is conclusively established unless the presiding official permits withdrawal or amendment of the admission for good cause shown.

(e) Upon motion, the presiding officer may order any party to respond to a request for admission.

[54 FR 42906, Oct. 18, 1989]

§ 209.7 Subpoenas; witness fees.

(a) The Chief Counsel may issue a subpoena on his or her own initiative in any matter related to enforcement of the railroad safety laws. However, where a proceeding under subpart B, C, or D of this part has been initiated, only the presiding officer may issue subpoenas, and only upon the written request of any party to the proceeding who makes an adequate showing that the information sought will materially advance the proceeding.

(b) A subpoena may require attendance of a witness at a deposition or hearing or the production of documentary or other tangible evidence in the possession or control of the person served, or both.

(c) A subpoena may be served personally by any person who is not an interested person and is not less than eighteen (18) years of age, or by certified or registered mail.

(d) Service of a subpoena shall be made by delivering a copy of the subpoena in the appropriate manner, as set forth below. Service of a subpoena requiring attendance of a person is not complete unless delivery is accompanied by tender of fees for one day's attendance and mileage as specified by paragraph (f) of this section. However, when a subpoena is issued upon the request of any officer or agency of the United States, fees and mileage need not be tendered at the time of service but will be paid by FRA at the place and time specified in the subpoena for attendance.

Delivery of a copy of the subpoena may be made:

(1) To a natural person by:

(i) Handing it to the person;

(ii) Leaving it at his or her office with the person in charge thereof;

(iii) Leaving it at his or her dwelling place or usual place of abode with some person of suitable age and discretion then residing therein;

(iv) Mailing it by registered or certified mail to him or her at his or her last known address; or

(v) Any method whereby actual notice of the issuance and content is given (and the fees are made available) prior to the return date.

(2) To an entity other than a natural person by:

(i) Handing a copy of the subpoena to a registered agent for service or to any officer, director, or agent in charge of any office of the person;

(ii) Mailing it by registered or certified mail to any representative listed in paragraph (d)(2)(i) of this section at his or her last known address; or

(iii) Any method whereby actual notice is given to such representative (and the fees are made available) prior to the return date.

(e) The original subpoena bearing a certificate of service shall be filed in accordance with § 209.9.

(f) A witness subpoenaed by the FRA shall be entitled to the same fees and mileage as would be paid to a witness in a proceeding in the district courts of the United States. See 28 U.S.C. 1821. The witness fees and mileage shall be paid by the person requesting that the subpoena be issued. In an appropriate case, the Chief Counsel or the hearing officer may direct the person requesting issuance of a subpoena for the production of documentary or other tangible evidence to reimburse the responding person for actual costs of producing and/or transporting such evidence.

(g) Notwithstanding the provisions of paragraph (f) of this section, and upon request, witness fees and mileage or the costs of producing other evidence may be paid by the FRA if the official who issued the subpoena determines on the basis of good cause shown that:

(1) The presence of the subpoenaed witness or evidence will materially advance the proceedings; and

(2) The party at whose instance the subpoena was issued would suffer a serious financial hardship if required to pay the witness fees and mileage.

(h) Any person to whom a subpoena is directed may, prior to the time specified therein for compliance, but in no event more than ten (10) days after the date of service of such subpoena, apply in writing to the official who issued the subpoena, or if that person is unavailable, to the Chief Counsel, to quash or modify the subpoena. The application shall contain a brief statement of the reasons relied upon in support of the action sought therein. The issuing official or the Chief Counsel, as the case may be, may:

(1) Deny the application;

(2) Quash or modify the subpoena; or

(3) In the case of subpoena to produce documentary or other tangible evidence, condition denial of the application upon the advancement by the party in whose behalf the subpoena is issued of the reasonable cost of producing the evidence.

(i) If there is a refusal to obey a subpoena served upon any person under the provisions of this section, the FRA may request the Attorney General to seek the aid of the United States District Court for any district in which the person is found to compel that person, after notice, to appear and give testimony, or to appear and produce the subpoenaed documents before the FRA, or both.

(j) Attendance of any FRA employee engaged in an investigation which gave rise to a proceeding under subpart B or C of this part for the purpose of eliciting factual testimony may be assured by filing a request with the Chief Counsel at least fifteen (15) days before the date of the hearing. The request must indicate the present intent of the requesting person to call the employee as a witness and state generally why the witness will be required.

[42 FR 56742, Oct. 28, 1977, as amended at 54 FR 42906, Oct. 18, 1989]

§ 209.8 Depositions in formal proceedings.

(a) Any party to a proceeding under subpart B, C, or D of this part may take the testimony of any person, including a party, by deposition upon oral examination on order of the presiding officer following the granting of a motion under paragraph (b) of this section. Depositions may be taken before any disinterested person who is authorized by law to administer oaths. The attendance of witnesses may be compelled by subpoena as provided in § 209.7 and, for proceedings under subpart D of this part, § 209.315.

(b) Any party desiring to take the deposition of a witness shall file and

serve a written motion setting forth the name of the witness; the date, time, and place of the deposition; the subject matter of the witness' expected testimony; whether any party objects to the taking of the deposition; and the reasons for taking such deposition. Such motion shall be granted only upon a showing of good cause. Good cause exists to take a person's deposition when the information sought is relevant to the subject matter involved in the proceeding and:

(1) The information is not obtainable from some other source that is more convenient, less burdensome, and less expensive; or

(2) The request is not unreasonably cumulative, unduly burdensome, or unduly expensive, taking into account the needs of the case, limitations on the parties' resources, and the importance of the issues in the case.

(c) Such notice as the presiding officer shall order will be given for the taking of a deposition, but this shall not be less than 10 days' written notice unless the parties agree to a shorter period.

(d) Each witness testifying upon deposition shall be sworn and the adverse party shall have the right to cross-examine. The questions propounded and the answers thereto, together with all objections made, shall be reduced to writing, subscribed by the witness, and certified by the reporter.

(e) Depositions taken under this section may be used for discovery, to contradict or impeach the testimony of the deponent as a witness, or as evidence in the proceeding as permitted by paragraph (f) of this section and in accordance with the limitations of Fed. R. Civ. Pro. 32 as though it were applicable to these proceedings.

(f) Subject to such objections to the questions and answers as were noted at the time of taking the deposition and as would be valid were the witness personally present and testifying, such deposition may be offered in evidence by any party to the proceeding.

[54 FR 42906, Oct. 18, 1989]

§ 209.9 Filing.

All materials filed with FRA or any FRA officer in connection with a proceeding under subpart B, C, or D of this part shall be submitted in duplicate to the Assistant Chief Counsel for Safety, (RCC–30), Office of Chief Counsel, Federal Railroad Administration, 400 Seventh Street, SW., Washington, DC 20590, except that documents produced in accordance with a subpoena shall be presented at the place and time specified by the subpoena.

[54 FR 42906, Oct. 18, 1989]

§ 209.11 Request for confidential treatment.

(a) This section governs the procedures for requesting confidential treatment of any document filed with or otherwise provided to FRA in connection with its enforcement of statutes or FRA regulations related to railroad safety. For purposes of this section, ''enforcement'' shall include receipt of documents required to be submitted by FRA regulations, and all investigative and compliance activities, in addition to the development of violation reports and recommendations for prosecution.

(b) A request for confidential treatment with respect to a document or portion thereof may be made on the basis that the information is—

(1) Exempt from the mandatory disclosure requirements of the Freedom of Information Act (5 U.S.C. 552);

(2) Required to be held in confidence by 18 U.S.C. 1905; or

(3) Otherwise exempt by law from public disclosure.

(c) Any document containing information for which confidential treatment is requested shall be accompanied at the time of filing by a statement justifying nondisclosure and referring to the specific legal authority claimed.

(d) Any document containing any information for which confidential treatment is requested shall be marked ''CONFIDENTIAL'' or ''CONTAINS CONFIDENTIAL INFORMATION'' in bold letters. If confidentiality is requested as to the entire document, or if it is claimed that nonconfidential information in the document is not reasonably segregable from confidential information, the accompanying statement of justification shall so indicate. If confidentiality is requested as to a portion of the document, then the person filing the document shall file together with the document a second

copy of the document from which the information for which confidential treatment is requested has been deleted. If the person filing a document of which only a portion is requested to be held in confidence does not submit a second copy of the document with the confidential information deleted. FRA may assume that there is no objection to public disclosure of the document in its entirety.

(e) FRA retains the right to make its own determination with regard to any claim of confidentiality. Notice of a decision by the FRA to deny a claim, in whole or in part, and an opportunity to respond shall be given to a person claiming confidentiality of information no less than five days prior to its public disclosure.

[42 FR 56742, Oct. 28, 1977, as amended at 70 FR 11094, Mar. 7, 2005]

§ 209.13 Consolidation.

At the time a matter is set for hearing under subpart B, C, or D of this part, the Chief Counsel may consolidate the matter with any similar matter(s) pending against the same respondent or with any related matter(s) pending against other respondent(s) under the same subpart. However, on certification by the presiding officer that a consolidated proceeding is unmanageable or otherwise undesirable, the Chief Counsel will rescind or modify the consolidation.

[54 FR 42906, Oct. 18, 1989]

§ 209.15 Rules of evidence.

The Federal Rules of Evidence for United States Courts and Magistrates shall be employed as general guidelines for proceedings under subparts B, C, and D of this part. However, all relevant and material evidence shall be received into the record.

[54 FR 42907, Oct. 18, 1989]

§ 209.17 Motions.

Motions shall be in writing, filed with the presiding officer, and copies served upon the parties in accordance with § 209.5, except that oral motions may be made during the course of any hearing or appearance before the presiding officer. Each motion shall state the particular order, ruling, or action desired and the grounds therefor. Unless otherwise specified by the presiding officer, any objection to a written motion must be filed within 10 days after receipt of the motion.

[54 FR 42907, Oct. 18, 1989]

Subpart B—Hazardous Materials Penalties

CIVIL PENALTIES

§ 209.101 Civil penalties generally.

(a) Sections 209.101 through 209.121 prescribe rules of procedure for the assessment of civil penalties pursuant to the Federal hazardous materials transportation safety law, 49 U.S.C. Chapter 51.

(b) When the FRA has reason to believe that a person has knowingly committed an act which is a violation of any provision of subchapter B or C of chapter I, subtitle B of this title for which the FRA exercises enforcement responsibility or any waiver or order issued thereunder, it may conduct a proceeding to assess a civil penalty.

[42 FR 56742, Oct. 28, 1977, as amended at 61 FR 38646, July 25, 1996]

§ 209.103 Minimum and maximum penalties.

(a) A person who knowingly violates a requirement of the Federal hazardous material transportation law, an order issued thereunder, subchapter A or C of Chapter I, subtitle B, of this title, or a special permit or approval issued under subchapter A or C of Chapter I, subtitle B, of this title is liable for a civil penalty of at least $250 but not more than $50,000 for each violation, except that—

(1) The maximum civil penalty for a violation is $100,000 if the violation results in death, serious illness or severe injury to any person, or substantial destruction of property and

(2) A minimum $450 civil penalty applies to a violation related to training.

(b) When the violation is a continuing one, each day of the violation constitutes a separate offense. 49 U.S.C. 5123.

(c) The maximum and minimum civil penalties described in paragraph (a)

above apply to violations occurring on or after August 10, 2005.

[71 FR 77294, Dec. 26, 2006]

§ 209.105 Notice of probable violation.

(a) FRA, through the Chief Counsel, begins a civil penalty proceeding by serving a notice of probable violation on a person charging him or her with having violated one or more provisions of subchapter A or C of chapter I, subtitle B of this title. Appendix B to this part contains guidelines used by the chief counsel in making initial penalty assessments.

(b) A notice of probable violation issued under this section includes:

(1) A statement of the provision(s) which the respondent is believed to have violated;

(2) A statement of the factual allegations upon which the proposed civil penalty is being sought;

(3) Notice of the maximum amount of civil penalty for which the respondent may be liable;

(4) Notice of the amount of the civil penalty proposed to be assessed;

(5) A description of the manner in which the respondent should make payment of any money to the United States;

(6) A statement of the respondent's right to present written explanations, information or any materials in answer to the charges or in mitigation of the penalty; and

(7) A statement of the respondent's right to request a hearing and the procedures for requesting a hearing.

(c) The FRA may amend the notice of probable violation at any time prior to the entry of an order assessing a civil penalty. If the amendment contains any new material allegation of fact, the respondant is given an opportunity to respond. In an amended notice, FRA may change the civil penalty amount proposed to be assessed up to and including the maximum penalty amount of $50,000 for each violation, except that if the violation results in death, serious illness or severe injury to any person, or substantial destruction of property, FRA may change the penalty amount proposed to be assessed up to and including the maximum penalty amount of $100,000.

[42 FR 56742, Oct. 28, 1977, as amended at 61 FR 38646, July 25, 1996; 69 FR 30591, May 28, 2004; 71 FR 77295, Dec. 26, 2006]

§ 209.107 Reply.

(a) Within thirty (30) days of the service of a notice of probable violation issued under § 209.105, the respondent may—

(1) Pay as provided in § 209.109(a) and thereby close the case;

(2) Make an informal response as provided in § 209.111; or

(3) Request a hearing as provided in § 209.113.

(b) The Chief Counsel may extend the thirty (30) days period for good cause shown.

(c) Failure of the respondent to reply by taking one of the three actions described in paragraph (a) of this section within the period provided constitutes a waiver of his or her right to appear and contest the allegations and authorizes the Chief Counsel, without further notice to the respondent, to find the facts to be as alleged in the notice of probable violation and to assess an appropriate civil penalty.

§ 209.109 Payment of penalty; compromise.

(a) Payment of a civil penalty may be made by certified check, money order, or credit card. Payments made by certified check or money order should be made payable to the Federal Railroad Administration and sent to DOT/FRA, Mike Monroney Aero Center, General Accounting Division, AMZ–300, P.O. Box 25082, Oklahoma City, OK 73125. Overnight express payments may be sent to DOT/FRA, Mike Monroney Aero Center, General Accounting Division, AMZ–300, 6500 South MacArthur Blvd. Headquarters Building, Room 176, Oklahoma City, OK 73169. Payment by credit card must be made via the Internet at *https://www.pay.gov/paygov/*. Instructions for online payment are found on the Web site.

(b) At any time before an order assessing a penalty is referred to the Attorney General for collection, the respondent may offer to compromise for

a specific amount by contracting the Chief Counsel.

[42 FR 56742, Oct. 28, 1977, as amended at 71 FR 77295, Dec. 26, 2006]

§ 209.111 Informal response and assessment.

(a) If a respondent elects to make an informal response to a notice of probable violation, respondent shall submit to the Chief Counsel such written explanations, information or other materials as respondent may desire in answer to the charges or in mitigation of the proposed penalty.

(b) The respondent may include in his or her informal written response a request for a conference. Upon receipt of such a request, the Chief Counsel arranges for a conference as soon as practicable at a time and place of mutual convenience.

(c) Written explanations, information or materials, submitted by the respondent and relevant information presented during any conference held under this section are considered by the Chief Counsel in reviewing the notice of proposed violation and determining the fact of violation and the amount of any penalty to be assessed.

(d) After consideration of an informal response, including any relevant information presented at a conference, the Chief Counsel may dismiss the notice of probable violation in whole or in part. If he or she does not dismiss it in whole, he or she may issue an order assessing a civil penalty.

§ 209.113 Request for hearing.

(a) If a respondent elects to request a hearing, he or she must submit a written request to the Chief Counsel referring to the case number which appeared on the notice of the probable violation. The request must—

(1) State the name and address of the respondent and of the person signing the request if different from the respondent;

(2) State with respect to each allegation whether it is admitted or denied; and

(3) State with particularity the issues to be raised by the respondent at the hearing.

(b) After a request for hearing which complies with the requirements of paragraph (a) of this section, the Chief Counsel schedules a hearing for the earliest practicable date.

(c) The Chief Counsel or the hearing officer appointed under § 209.115 may grant extensions of the time of the commencement of the hearing for good cause shown.

§ 209.115 Hearing.

(a) When a hearing is requested and scheduled under § 209.113, a hearing officer designated by the Chief Counsel convenes and presides over the hearing. If requested by respondent and if practicable, the hearing is held in the general vicinity of the place where the alleged violation occurred, or at a place convenient to the respondent. Testimony by witnesses shall be given under oath and the hearing shall be recorded verbatim.

(b) The presiding official may:

(1) Administer oaths and affirmations;

(2) Issue subpoenas as provided by § 209.7;

(3) Adopt procedures for the submission of evidence in written form;

(4) Take or cause depositions to be taken;

(5) Rule on offers of proof and receive relevant evidence;

(6) Examine witnesses at the hearing;

(7) Convene, recess, reconvene, and adjourn and otherwise regulate the course of the hearing;

(8) Hold conferences for settlement, simplification of the issues or any other proper purpose; and

(9) Take any other action authorized by or consistent with the provisions of this subpart pertaining to civil penalties and permitted by law which may expedite the hearing or aid in the disposition of an issue raised, therein.

(c) The Chief Counsel has the burden of providing the facts alleged in the notice of proposed violation and may offer such relevant information as may be necessary fully to inform the presiding officer as to the matter concerned.

(d) The respondent may appear and be heard on his or her own behalf or through counsel of his or her choice. The respondent or his or her counsel may offer relevant information including testimony which he or she believes

should be considered in defense of the allegations or which may bear on the penalty proposed to be assessed and conduct such cross-examination as may be required for a full disclosure of the material facts.

(e) At the conclusion of the hearing or as soon thereafter as the hearing officer shall provide, the parties may file proposed findings and conclusions, together with supporting reasons.

[42 FR 56742, Oct. 28, 1977; 42 FR 59755, Nov. 21, 1977]

§ 209.117 Presiding officer's decision.

(a) After consideration of the evidence of record, the presiding officer may dismiss the notice of probable violation in whole or in part. If the presiding officer does not dismiss it in whole, he or she will issue and serve on the respondent an order assessing a civil penalty. The decision of the presiding officer will include a statement of findings and conclusions as well as the reasons therefor on all material issues of fact, law, and discretion.

(b) If, within twenty (20) days after service of an order assessing a civil penalty, the respondent does not pay the civil penalty or file an appeal as provided in § 209.121, the case may be referred to the Attorney General with a request that an action to collect the penalty be brought in the appropriate United States District Court.

§ 209.119 Assessment considerations.

The assessment of a civil penalty under § 209.117 is made only after considering:

(a) The nature and circumstances of the violation;

(b) The extent and gravity of the violation;

(c) The degree of the respondent's culpabilty;

(d) The respondent's history of prior offenses;

(e) The respondent's ability to pay;

(f) The effect on the respondent's ability to continue in business; and

(g) Such other matters as justice may require.

§ 209.121 Appeal.

(a) Any party aggrieved by a presiding officer's decision or order issued under § 209.117 assessing a civil penalty may file an appeal with the Administrator. The appeal must be filed within twenty (20) days of service of the presiding officer's order.

(b) Prior to rendering a final determination on an appeal, the Administrator may remand the case for further proceedings before the hearing officer.

(c) In the case of an appeal by a respondent, if the Administrator affirms the assessment and the respondent does not pay the civil penalty within twenty (20) days after service of the Administrator's decision on appeal, the matter may be referred to the Attorney General with a request that an action to collect the penalty be brought in the appropriate United States District Court.

CRIMINAL PENALTIES

§ 209.131 Criminal penalties generally.

A person who knowingly violates 49 U.S.C. 5104(b) or § 171.2(l) of this title or willfully or recklessly violates a requirement of the Federal hazardous material transportation law or a regulation, order, special permit, or approval issued thereunder shall be fined under title 18, United States Code, or imprisoned for not more than 5 years, or both, except the maximum amount of imprisonment shall be 10 years in any case in which the violation involves the release of a hazardous material which results in death or bodily injury to any person.

[71 FR 77295, Dec. 26, 2006]

§ 209.133 Referral for prosecution.

If an inspector, including a certified state inspector under part 212 of this chapter, or another employee of FRA becomes aware of a possible knowing violation of 49 U.S.C. 5104(b) or a willful or reckless violation of the Federal hazardous materials transportation law or a regulation issued under those laws for which FRA exercises enforcement responsibility, he or she shall report it to the Chief Counsel. If evidence exists tending to establish a prima facie case, and if it appears that assessment of a civil penalty would not be an

adequate deterrent to future violations, the Chief Counsel refers the report to the Department of Justice for criminal prosecution of the offender.

[61 FR 38647, July 25, 1996, as amended at 71 FR 77295, Dec. 26, 2006]

Subpart C—Compliance Orders

§ 209.201 Compliance orders generally.

(a) This subpart prescribes rules of procedure leading to the issuance of compliance orders pursuant to the Federal railroad safety laws at 49 U.S.C. 5121(a) and/or 20111(b).

(b) The FRA may commence a proceeding under this subpart when FRA has reason to believe that a person is engaging in conduct or a pattern of conduct that involves one or more violations of the Federal railroad safety laws or any regulation or order issued under those laws for which FRA exercises enforcement authority.

[61 FR 38647, July 25, 1996]

§ 209.203 Notice of investigation.

(a) FRA begins a compliance order proceeding by serving a notice of investigation on the respondent.

(b) The notice of investigation contains:

(1) A statement of the legal authority for the proceeding;

(2) A statement of the factual allegations upon which the remedial action is being sought; and

(3) A statement of the remedial action being sought in the form of a proposed compliance order.

(c) The FRA may amend the notice of investigation at any time prior to the entry of a final compliance order. If an amendment includes any new material allegation of fact or seeks new or additional remedial action, the respondent is given an opportunity to respond.

§ 209.205 Reply.

(a) Within thirty (30) days of service of a notice of investigation, the respondent may file a reply with the FRA. The Chief Counsel may extend the time for filing for good cause shown.

(b) The reply must be in writing, signed by the person filing it, and state with respect to each factual allegation whether it is admitted or denied. Even though formally denied, a factual allegation set forth in a notice of investigation is considered to be admitted for purposes of the proceeding unless:

(1) Opposed by the affidavit of an individual having personal knowledge of the subject matter;

(2) Challenged as defective on its face together with a supporting explanation as to why it is believed to be defective; or

(3) Otherwise actively put at issue through the submission of relevant evidence.

(c) The reply must set forth any affirmative defenses and include a statement of the form and nature of proof by which those defenses are to be established.

(d) If it is necessary to respond to an amendment to the notice of investigation, the respondent may amend the reply concerning the substance of matters contained in the amendment to the notice at any time before the issuance of an order under § 209.211.

(e) If the respondent elects not to contest one or more factual allegations, he or she should so state in the reply. An election not to contest a factual allegation is an admission of that allegation solely for the purpose of issuing a compliance order. That election constitutes a waiver of hearing as to that allegation but does not, by itself, constitute a waiver of the right to be heard on other issues. In connection with a statement of election not to contest a factual allegation, the respondent may propose an appropriate order for issuance by the Administrator or propose the negotiation of a consent order.

(f) Failure of the respondent to file a reply within the period provided constitutes a waiver of his or her right to appear and contest the allegation and authorizes the Administrator, without further notice to the respondent, to find the facts to be as alleged in the notice of proposed violation and to issue an appropriate order directing compliance.

§ 209.207 Consent order.

(a) At any time before the issuance of an order under § 209.211, the Chief Counsel and the respondent may execute an

agreement proposing the entry by consent of an order directing compliance. The Administrator may accept the proposed order by signing it. If the Administrator rejects the proposed order, he or she directs that the proceeding continue.

(b) An agreement submitted to the Administrator under this section must include:

(1) A proposed compliance order suitable for the Administrator's signature;

(2) An admission of all jurisdictional facts;

(3) An express waiver of further procedural steps and of all right to seek judicial review or otherwise challenge or contest the validity of the order; and

(4) An acknowledgment that the notice of investigation may be used to construe the terms of the order.

§ 209.209 Hearing.

(a) When a respondent files a reply contesting allegations in a notice of investigation issued under § 209.203 or when the FRA and the respondent fail to agree upon an acceptable consent order, the hearing officer designated by the Chief Counsel convenes and presides over a hearing on the proposed compliance order.

(b) The presiding official may:

(1) Administer oaths and affirmations;

(2) Issue subpoenas as provided by § 209.7;

(3) Adopt procedures for the submission of evidence;

(4) Take or cause depositions to be taken;

(5) Rule on offers of proof and receive relevant evidence;

(6) Examine witnesses at the hearing;

(7) Convene, recess, reconvene, adjourn and otherwise regulate the course of the hearing;

(8) Hold conferences for settlement, simplification of the issues or any other proper purpose; and

(9) Take any other action authorized by or consistent with the provisions of this subpart pertaining to compliance orders and permitted by law which may expedite the hearing or aid in the disposition of an issue raised therein.

(c) The Chief Counsel has the burden of providing the facts alleged in the notice of investigation and may offer such relevant information as may be necessary fully to inform the presiding officer as to the matter concerned.

(d) The respondent may appear and be heard on his or her own behalf or through counsel of his or her choice. The respondent or his or her counsel may offer relevant information, including testimony which he or she believes should be considered in defense of the allegations or which may bear on the remedial action being sought, and conduct such cross-examination as may be required for a full disclosure of the material facts.

(e) At the conclusion of the hearing or as soon thereafter as the hearing officer shall provide, the parties may file proposed findings and conclusions, together with supporting reasons therefor.

§ 209.211 Presiding officer's decision.

(a) After consideration of evidence, the presiding officer may dismiss the notice of investigation or issue a compliance order. The decision of the presiding officer will include a statement of findings and conclusions as well as the reasons therefor on all material issues of fact, law, and discretion.

(b) A compliance order issued under this section is effective twenty (20) days from service on the respondent unless otherwise provided therein.

§ 209.213 Appeal.

(a) Any party aggrieved by a presiding officer's decision may file an appeal with the Administrator. The appeal must be filed within twenty (20) days after service of the presiding officer's decision.

(b) Prior to rendering a final determination on an appeal, the Administrator may remand the case for further proceedings before the hearing officer.

(c) The filing of an appeal does not stay the effectiveness of a compliance order unless the Administrator expressly so provides.

§ 209.215 Time limitation.

A proceeding for the issuance of a compliance order under the Federal Railroad Safety Act of 1970, as amended, shall be completed within twelve

(12) months after issuance of the notice of investigation.

Subpart D—Disqualification Procedures

SOURCE: 54 FR 42907, Oct. 18, 1989, unless otherwise noted.

§ 209.301 Purpose and scope.

(a) This subpart prescribes the rules of practice for administrative proceedings relating to the determination of an individual's fitness for performing safety-sensitive functions under section 209(f) of the Federal Railroad Safety Act of 1970 (45 U.S.C. 438(f)).

(b) The purpose of this subpart is to prevent accidents and casualties in railroad operations that result from the presence in the work force of railroad employees, including managers and supervisors, and agents of railroads who have demonstrated their unfitness to perform the safety-sensitive functions described in § 209.303 by violating any rule, regulation, order or standard prescribed by FRA. Employees and agents who evidence such unfitness may be disqualified, under specified terms and conditions, temporarily or permanently, from performing such safety-sensitive functions.

(c) This subpart does not preempt a railroad from initiating disciplinary proceedings and imposing disciplinary sanctions against its employees, including managers and supervisors, under its collective bargaining agreements or in the normal and customary manner. Disqualification determinations made under this subpart shall have no effect on prior or subsequent disciplinary actions taken against such employees by railroads.

§ 209.303 Coverage.

This subpart applies to the following individuals:

(a) Railroad employees who are assigned to perform service subject to the Hours of Service Act (45 U.S.C. 61–64b) during a duty tour, whether or not the person has performed or is currently performing such service, and any person who performs such service.

(b) Railroad employees or agents who:

(1) Inspect, install, repair, or maintain track and roadbed;

(2) Inspect, repair or maintain, locomotives, passenger cars, and freight cars;

(3) Conduct training and testing of employees when the training or testing is required by the FRA's safety regulations; or

(c) Railroad managers, supervisors, or agents when they:

(1) Perform the safety-sensitive functions listed in paragraphs (a) and (b) of this section;

(2) Supervise and otherwise direct the performance of the safety-sensitive functions listed in paragraphs (a) and (b) of this section; or

(3) Are in a position to direct the commission of violations of any of the requirements of parts 213 through 236 of this title.

§ 209.305 Notice of proposed disqualification.

(a) FRA, through the Chief Counsel, begins a disqualification proceeding by serving a notice of proposed disqualification on the respondent charging him or her with having violated one or more rules, regulations, orders, or standards promulgated by FRA, which render the respondent unfit to perform safety-sensitive functions described in § 209.303.

(b) The notice of proposed disqualification issued under this section shall contain:

(1) A statement of the rule(s), regulation(s), order(s), or standard(s) that the respondent is alleged to have violated;

(2) A statement of the factual allegations that form the basis of the initial determination that the respondent is not fit to perform safety-sensitive functions;

(3) A statement of the effective date, duration, and other conditions, if any, of the disqualification order;

(4) A statement of the respondent's right to answer the charges in writing and furnish affidavits and any other documentary evidence in support of the answer;

(5) A statement of the respondent's right to make an informal response to the Chief Counsel;

(6) A statement of the respondent's right to request a hearing and the procedures for requesting a hearing;

(7) A statement of the respondent's right to counsel or other designated representative; and

(8) Notice of the consequences of the respondent's failure to take any of the actions described in § 209.307(a).

(c) The Chief Counsel shall enclose with the notice of proposed disqualification a copy of the material that is relied on in support of the charges. Nothing in this section precludes the Chief Counsel from presenting at a subsequent hearing under § 209.321 any evidence of the charges set forth in the notice that the Chief Counsel acquires after service thereof on the respondent. The Chief Counsel, however, shall serve a copy of any such evidence on the respondent at or before the prehearing conference required under § 209.319. Failure to furnish such evidence to respondent at or before the prehearing conference bars its introduction at the hearing.

(d) The Chief Counsel shall provide a copy of the notice of proposed disqualification to the railroad that employs the respondent.

§ 209.307 Reply.

(a) Within 30 days after receipt of the notice of proposed disqualification issued under § 209.305, the respondent shall reply in writing to the charges. The respondent may furnish affidavits and any other documentary evidence in support of the reply. Further, the respondent may elect to—

(1) Stipulate to the charges and consent to the imposition of the disqualification order under the conditions set forth in the notice;

(2) Make an informal response as provided in § 209.309; or

(3) Request a hearing as provided in § 209.311.

(b) The Chief Counsel may extend the reply period for good cause shown, provided the request for extension is served before the expiration of the period provided in paragraph (a) of this section.

(c) Failure of the respondent to reply to the notice of proposed disqualification within the period provided in paragraph (a) of this section or an extension thereto provided under paragraph (b) of this section constitutes a waiver of the respondent's right to appear and contest the charges or the proposed disqualification. Respondent's failure to reply authorizes the Chief Counsel, without further notice to the respondent, to find the respondent unfit for the performance of the safety-sensitive functions described in § 209.303 and to order the respondent disqualified from performing them for the period and under the other conditions described in the notice of proposed disqualification. The Chief Counsel shall serve respondent with the disqualification order and provide a copy of the order to the railroad by which the respondent is employed.

§ 209.309 Informal response.

(a) If the respondent elects to make an informal response to a notice of proposed disqualification, he or she shall submit to the Chief Counsel such written explanations, information, or other materials as respondent may desire in answer to the charges or in mitigation of the proposed disqualification.

(b) The respondent may include in an informal written response a request for a conference. Upon receipt of such a request, the Chief Counsel shall arrange for a conference at a time and place designated by the Chief Counsel.

(c) Written explanations, information, or materials submitted by the respondent and relevant information presented during any conference held under this section shall be considered by the Chief Counsel in reviewing the notice of proposed disqualification, including the question of the respondent's fitness and the conditions of any disqualification that may be imposed.

(d) After consideration of an informal response, including any relevant information presented at a conference, the Chief Counsel shall take one of the following actions:

(1) Dismiss all the charges and terminate the notice of proposed disqualification;

(2) Dismiss some of the charges and mitigate the proposed disqualification;

(3) Mitigate the proposed disqualification; or

(4) Sustain the charges and proposed disqualification.

(e) Should the Chief Counsel sustain, in whole or in part, the charges and proposed disqualification and reach settlement with the respondent, the Chief Counsel shall issue an appropriate disqualification order reflecting the settlement and shall provide a copy of that order to the railroad by which the respondent is employed. The duration of the disqualification period may be less than, but shall be no greater than, the period set forth in the notice. Any settlement reached shall be evidenced by a written agreement, which shall include declarations from the respondent stipulating to the charges contained in the disqualification order, consenting to the imposition of the disqualification under the conditions set forth in the disqualification order, and waiving his or her right to a hearing.

(f) If settlement of the charges against the respondent is not achieved, the Chief Counsel shall terminate settlement discussions no later than 30 days from service of the informal response upon the Chief Counsel by serving respondent written notice of termination of settlement negotiations.

(g) By electing to make an informal response to a notice of proposed disqualification, the respondent does not waive the right to a hearing. However, the respondent must submit the hearing request required by § 209.311(a) within 10 days after receipt of the notice of termination of settlement negotiations from the Chief Counsel. Failure to submit such a request constitutes a waiver of the respondent's right to appear and contest the charges or the proposed disqualification.

(h) The Chief Counsel may extend the period for requesting a hearing for good cause shown, provided the request for extension is served before the expiration of the period provided in paragraph (g) of this section.

§ 209.311 Request for hearing.

(a) If the respondent elects to request a hearing, he or she must submit a written request within the time periods specified in § 209.307(a) or § 209.309(g) to the Chief Counsel referring to the case number that appears on the notice of proposed disqualification. The request must contain the following:

(1) The name, address, and telephone number of the respondent and of the respondent's designated representative, if any;

(2) A specific response admitting, denying, or explaining each allegation of the notice of disqualification order.

(3) A description of the claims and defenses to be raised by the respondent at the hearing; and

(4) The signature of the respondent or the representative, if any.

(b) Upon receipt of a request for a hearing complying with the requirements of paragraph (a) of this section, the Chief Counsel shall arrange for the appointment of a presiding officer and transmit the disqualification file to the presiding officer, who shall schedule the hearing for the earliest practicable date within the time period set by § 209.321(a) of this subpart.

(c) Upon assignment of a presiding officer, further matters in the proceeding generally are conducted by and through the presiding officer, except that the Chief Counsel and respondent may settle or voluntarily dismiss the case without order of the presiding officer. The Chief Counsel shall promptly notify the presiding officer of any settlement or dismissal of the case.

§ 209.313 Discovery.

(a) Disqualification proceedings shall be conducted as expeditiously as possible with due regard to the rights of the parties. Discovery is designed to enable a party to obtain relevant information needed for preparation of the party's case. These regulations are intended to provide a simple, timely, and relatively economical system for discovery. They shall be interpreted and applied so as to avoid delay and facilitate adjudication of the case.

(b) Discovery may be obtained by requests for admission under § 209.6, requests for production of documentary or other tangible evidence under § 209.7, and depositions under § 209.8.

(c) A party may initiate the methods of discovery permitted under paragraph (b) of this section at any time after respondent requests a hearing under § 209.311.

(d) Discovery shall be completed within 90 days after receipt of respondent's request for a hearing under

§ 209.311. Upon motion for good cause shown, the presiding officer may extend this time period for an additional 30 days. The presiding officer may grant an additional 30 day extension only when the party requesting the extension shows by clear and convincing evidence that the party was unable to complete discovery within the prescribed time period through no fault or lack of due diligence of such party, and that denial of the request would result in irreparable prejudice.

(e) If a party fails to comply with a discovery order or an order to compel, the presiding officer may:

(1) Strike any appropriate part of the pleadings or other submissions of the party failing to comply with such order;

(2) Prohibit the party failing to comply with such order from introducing evidence relating to the information sought;

(3) Draw an inference in favor of the requesting party with regard to the information sought; and

(4) Permit the requesting party to introduce secondary evidence concerning the information sought.

§ 209.315 Subpoenas.

Once a notice of proposed disqualification has been issued in a particular matter, only the presiding officer may issue, deny, quash, or modify subpoenas under this subpart in accordance with § 209.7.

§ 209.317 Official record.

The notice of proposed disqualification, respondent's reply, exhibits, and verbatim record of testimony, if a hearing is held, and all pleadings, stipulations, and admissions filed and rulings and orders entered in the course of the proceeding shall constitute the exclusive and official record.

§ 209.319 Prehearing conference.

(a) The parties shall confer with the presiding officer, either in person or by telephone, for a conference at least 10 days before the hearing to consider:

(1) Formulation and simplification of the issues;

(2) Stipulations, admissions of fact, and admissions of the contents and authenticity of documents;

(3) Advance rulings from the presiding officer on the admissibility of evidence;

(4) Identification of witnesses, including the scope of their testimony, and of hearing exhibits;

(5) Possibility of settlement; and

(6) Such other matters as the presiding officer deems necessary to expedite the disposition of the proceeding.

(b) The record shall show the matters disposed of by order and by agreement in such a prehearing conference. The subsequent course of the hearing shall be controlled by such action.

(c) The prehearing conference shall be held within 150 days after receipt of respondent's request for a hearing under § 209.311.

§ 209.321 Hearing.

(a) Upon receipt of a hearing request complying with § 209.311, an administrative hearing for review of a notice of proposed disqualification shall be conducted by a presiding officer, who can be any person authorized by the FRA Administrator, including an administrative law judge. The hearing shall begin within 180 days from receipt of respondent's hearing request. Notice of the time and place of the hearing shall be given to the parties at least 20 days before the hearing. Testimony by witnesses shall be given under oath and the hearing shall be recorded verbatim. The hearing shall be open to the public, unless the presiding official determines that it would be in the best interests of the respondent, a witness, or other affected persons, to close all or any part of it. If the presiding official makes such a determination, an appropriate order, which sets forth the reasons therefor, shall be entered.

(b) The presiding officer may:

(1) Administer oaths and affirmations;

(2) Issue subpoenas as provided by § 209.7;

(3) Adopt procedures for the submission of evidence in written form;

(4) Take or cause depositions to be taken as provided in § 209.8;

(5) Rule on offers of proof and receive relevant evidence;

(6) Examine witnesses at the hearing;

(7) Convene, recess, reconvene, adjourn, and otherwise regulate the course of the hearing;

(8) Hold conferences for settlement, simplification of the issues, or any other proper purpose; and

(9) Take any other action authorized by or consistent with the provisions of this subpart and permitted by law that may expedite the hearing or aid in the disposition of an issue raised therein.

(c) FRA has the burden of proof, by a preponderance of the evidence, as to the facts alleged in the notice of proposed disqualification, the reasonableness of the conditions of the qualification proposed, and, except as provided in § 209.329(a), the respondent's lack of fitness to perform safety-sensitive functions. The Chief Counsel may offer relevant evidence, including testimony, in support of the allegations contained in the notice of proposed disqualification and conduct such cross-examination as may be required for a full disclosure of the material facts.

(d) The respondent may appear and be heard on respondent's own behalf or through respondent's designated representative. The respondent may offer relevant evidence, including testimony, in defense of the allegations or in mitigation of the proposed disqualification and conduct such cross-examination as may be required for a full disclosure of the material facts. Respondent has the burden of proof, by a preponderance of the evidence, as to any affirmative defense, including that respondent's actions were in obedience to the direct order of a railroad supervisor or higher level official.

(e) The record shall be closed at the conclusion of the hearing, unless the parties request the opportunity to submit proposed findings and conclusions. When the presiding officer allows the parties to submit proposed findings and conclusions, documents previously identified for introduction into evidence, briefs, or other posthearing submissions the record shall be left open for such time as the presiding officer grants for that purpose.

[54 FR 42907, Oct. 18, 1989, as amended at 60 FR 53136, Oct. 12, 1995]

§ 209.323 Initial decision.

(a) The presiding officer shall prepare an initial decision after the closing of the record. The initial decision may dismiss the notice of proposed disqualification, in whole or in part, sustain the charges and proposed disqualification, or sustain the charges and mitigate the proposed disqualification.

(b) If the presiding officer sustains the charges and the proposed disqualification, dismisses some of the charges, or mitigates the proposed disqualification, the presiding officer shall issue and serve an appropriate order disqualifying respondent from engaging in the safety-sensitive functions described in § 209.303. If the presiding officer dismisses all of the charges set forth in notice of proposed disqualification, a dismissal order shall be issued and served.

(c) Each initial decision shall contain:

(1) Findings of fact and conclusions of law, as well as the reasons or bases therefor, upon all the material issues of fact and law presented on the record;

(2) An order, as described in paragraph (b) of this section;

(3) The dates any disqualification is to begin and end and other conditions, if any, that the respondent must satisfy before the disqualification order is discharged;

(4) The date upon which the decision will become final, as prescribed in § 209.325; and

(5) Notice of the parties' appeal rights, as prescribed in § 209.327.

(d) The decision shall be served upon the FRA Chief Counsel and the respondent. The Chief Counsel shall provide a copy of the disqualification order to the railroad by which the respondent is employed.

§ 209.325 Finality of decision.

(a) The initial decision of the presiding officer shall become final 35 days after issuance. Such decisions are not precedent.

(b) *Exception.* The initial decision shall not become final if, within 35 days after issuance of the decision, any party files an appeal under § 209.327. The timely filing of such an appeal shall stay the order in the initial decision.

§ 209.327 Appeal.

(a) Any party aggrieved by an initial decision issued under § 209.323 may file an appeal. The appeal must be filed within 35 days of issuance of the initial decision with the Federal Railroad Administrator, 400 Seventh Street, SW., Washington, DC 20590. A copy of the appeal shall be served on each party. The appeal shall set forth objections to the initial decision, supported by reference to applicable laws and regulations, and with specific reference to the record. If the Administrator has played any role in investigating, prosecuting, or deciding to prosecute the particular case, the Administrator shall recuse him or herself and delegate his or her authority under this section to a person not so involved.

(b) A party may file a reply to an appeal within 25 days of service of the appeal. If the party relies on evidence contained in the record for the reply, the party shall specifically refer to the pertinent evidence in the record.

(c) The Administrator may extend the period for filing an appeal or a response for good cause shown, provided the written request for extension is served before the expiration of the applicable period provided in paragraph (c) or (d) of this section.

(d) The Administrator has sole discretion to permit oral argument on the appeal. On the Administrator's own initiative or upon written motion by any party, the Administrator may determine that oral argument will contribute substantially to the development of the issues on appeal and may grant the parties an opportunity for oral argument.

(e) The Administrator may affirm, reverse, alter, or modify the decision of the presiding officer, or may remand the case for further proceedings before the presiding officer. The Administrator shall inform the parties and the presiding officer of his or her decision.

(f) The decision of the Administrator is final, constitutes final agency action, and is not subject to further administrative review.

§ 209.329 Assessment considerations.

(a) Proof of a respondent's willful violation of one of the requirements of parts 213 through 236 (excluding parts 225, 228, and 233) of this title establishes a rebuttable presumption that the respondent is unfit to perform the safety-sensitive functions described in § 209.303. Where such presumption arises, the respondent has the burden of establishing that, taking account of the factors in paragraph (b) of this section, he or she is fit to perform the foregoing safety-sensitive functions for the period and under the other conditions, if any, proposed in the notice of proposed disqualification.

(b) In determining respondent's lack of fitness to perform safety-sensitive functions and the duration and other conditions, if any, of appropriate disqualification orders under §§ 209.309, 209.323, and 209.327, the factors to be considered, to the extent: Each is pertinent to the respondent's case, include but are not limited to the following:

(1) The nature and circumstances of the violation, including whether the violation was intentional, technical, or inadvertent, was committed willfully, or was frequently repeated;

(2) The adverse impact or the potentially adverse impact of the violation on the health and safety of persons and the safety of property;

(3) The railroad's operating rules, safety rules, and repair and maintenance standards;

(4) Repair and maintenance standards adopted by the industry;

(5) The consistency of the conditions of the proposed disqualification with disqualification orders issued against other employees for the same or similar violations;

(6) Whether the respondent was on notice of any safety regulations that were violated or whether the respondent had been warned about the conduct in question;

(7) The respondent's past record of committing violations of safety regulations, including previous FRA warnings issued, disqualifications imposed, civil penalties assessed, railroad disciplinary actions, and criminal convictions therefor;

(8) The civil penalty scheduled for the violation of the safety regulation in question;

(9) Mitigating circumstances surrounding the violation, such as the existence of an emergency situation endangering persons or property and the need for the respondent to take immediate action; and

(10) Such other factors as may be warranted in the public interest.

§ 209.331 Enforcement of disqualification order.

(a) A railroad that employs or formerly employed an individual serving under a disqualification order shall inform prospective or actual employers of the terms and conditions of the order upon receiving notice that the disqualified employee is being considered for employment with or is employed by another railroad to perform any of the safety-sensitive functions described in § 209.303.

(b) A railroad that is considering hiring an individual to perform the safety-sensitive functions described in § 209.303 shall ascertain from the individual's previous employer, if such employer was a railroad, whether the individual is subject to a disqualification order.

(c) An individual subject to a disqualification order shall inform his or her employer of the order and provide a copy thereof within 5 days after receipt of the order. Such an individual shall likewise inform any prospective employer who is considering hiring the individual to perform any of the safety-sensitive functions described in § 209.303 of the order and provide a copy thereof within 5 days after receipt of the order or upon application for the position, whichever first occurs.

§ 209.333 Prohibitions.

(a) An individual subject to a disqualification order shall not work for any railroad in any manner inconsistent with the order.

(b) A railroad shall not employ any individual subject to a disqualification order in any manner inconsistent with the order.

§ 209.335 Penalties.

(a) Any individual who violates § 209.331(c) or § 209.333(a) may be permanently disqualified from performing the safety-sensitive functions described in § 209.303. Any individual who willfully violates § 209.331(c) or § 209.333(a) may also be assessed a civil penalty of at least $1,000 and not more than $5,000 per violation.

(b) Any railroad that violates § 209.331 (a) or (b) or § 209.333(b) may be assessed a civil penalty of at least $5,000 and not more than $11,000 per violation.

(c) Each day a violation continues shall constitute a separate offense.

[54 FR 42907, Oct. 18, 1989, as amended at 63 FR 11619, Mar. 10, 1998]

§ 209.337 Information collection.

The information collection requirements in § 209.331 of this part have been reviewed by the Office of Management and Budget pursuant to the Paperwork Reduction Act of 1980, (44 U.S.C. 3501 *et seq.*) and have been assigned OMB control number 2130–0529.

[56 FR 66791, Dec. 26, 1991]

Subpart E—Reporting of Remedial Actions

SOURCE: 59 FR 43676, Aug. 24, 1994, unless otherwise noted.

§ 209.401 Purpose and scope.

(a) The purpose of this subpart is to prevent accidents and casualties arising from the operation of a railroad that result from a railroad's failure to remedy certain violations of the Federal railroad safety laws for which assessment of a civil penalty has been recommended.

(b) To achieve this purpose, this subpart requires that if an FRA Safety Inspector notifies a railroad both that assessment of a civil penalty will be recommended for its failure to comply with a provision of the Federal railroad safety laws and that a remedial actions report must be submitted, the railroad shall report to the FRA Safety Inspector, within 30 days after the end of the calendar month in which such notification is received, actions taken to remedy that failure.

(c) This subpart does not relieve the railroad of the underlying responsibility to comply with a provision of the Federal railroad safety laws. The 30-day period after the end of the calendar month in which notification is received

is intended merely to provide the railroad with an opportunity to prepare its report to FRA, and does not excuse continued noncompliance.

(d) This subpart requires the submission of remedial actions reports for the general categories of physical defects, recordkeeping and reporting violations, and filing violations, where the railroad can literally and specifically correct a failure to comply with a provision of the Federal railroad safety laws, as reasonably determined by the FRA Safety Inspector. No railroad is required to submit a report for a failure involving either a completed or past transaction or a transaction that it can no longer remedy.

§ 209.403 Applicability.

This subpart applies to any railroad that receives written notification from an FRA Safety Inspector both (i) that assessment of a civil penalty will be recommended for its failure to comply with a provision of the Federal railroad safety laws and (ii) that it must submit a remedial actions report.

§ 209.405 Reporting of remedial actions.

(a) Except as provided in § 209.407, each railroad that has received written notification on Form FRA F 6180.96 from an FRA Safety Inspector both that assessment of a civil penalty will be recommended for the railroad's failure to comply with a provision of the Federal railroad safety laws and that it must submit a remedial actions report, shall report on this form all actions that it takes to remedy that failure. The railroad shall submit the completed form to the FRA Safety Inspector within 30 days after the end of the calendar month in which the notification is received.

(1) *Date of receipt of notification.* If the FRA Safety Inspector provides written notification to the railroad by first class mail, then for purposes of determining the calendar month in which notification is received, the railroad shall be presumed to have received the notification five business days following the date of mailing.

(2) *Completion of Form FRA F 6180.96, including selection of railroad remedial action code.* Each railroad shall complete the remedial actions report in the manner prescribed on the report form. The railroad shall select the one remedial action code on the reporting form that most accurately reflects the action or actions that it took to remedy the failure, such as, repair or replacement of a defective component without movement, movement of a locomotive or car for repair (where permitted) and its subsequent repair, completion of a required test or inspection, removal of a noncomplying item from service but not for repair (where permitted), reduction of operating speed (where sufficient to achieve compliance), or any combination of actions appropriate to remedy the noncompliance cited. Any railroad selecting the remedial action code ''other remedial actions'' shall also furnish FRA with a brief narrative description of the action or actions taken.

(3) *Submission of Form FRA F 6180.96.* The railroad shall return the form by first class mail to the FRA Safety Inspector whose name and address appear on the form.

(b) Any railroad concluding that the violation alleged on the inspection report may not have occurred may submit the remedial actions report with an appropriate written explanation. Failure to raise all pertinent defenses does not foreclose the railroad from doing so in response to a penalty demand.

§ 209.407 Delayed reports.

(a) If a railroad cannot initiate or complete remedial actions within 30 days after the end of the calendar month in which the notification is received, it shall—

(1) Prepare, in writing, an explanation of the reasons for such delay and a good faith estimate of the date by which it will complete the remedial actions, stating the name and job title of the preparer and including either:

(i) A photocopy of both sides of the Form FRA F 6180.96 on which the railroad received notification; or

(ii) The following information:

(A) The inspection report number;

(B) The inspection date; and

(C) The item number; and

(2) Sign, date, and submit such written explanation and estimate, by first

class mail, to the FRA Safety Inspector whose name and address appear on the notification, within 30 days after the end of the calendar month in which the notification is received.

(b) Within 30 days after the end of the calendar month in which all such remedial actions are completed, the railroad shall report in accordance with the remedial action code procedures referenced in § 209.405(a). The additional time provided by this section for a railroad to submit a delayed report shall not excuse it from liability for any continuing violation of a provision of the Federal railroad safety laws.

§ 209.409 Penalties.

Any person who violates any requirement of this subpart or causes the violation of any such requirement is subject to a civil penalty of at least $500 and not more than $16,000 per violation, except that: Penalties may be assessed against individuals only for willful violations, and, where a grossly negligent violation or a pattern of repeated violations has created an imminent hazard of death or injury to persons, or has caused death or injury, a penalty not to exceed $27,000 per violation may be assessed. Each day a violation continues shall constitute a separate offense. A person may also be subject to the criminal penalties provided for in 49 U.S.C. 21311 (formerly codified in 45 U.S.C. 438(e)) for knowingly and willfully falsifying reports required by this subpart.

[59 FR 43676, Aug. 24, 1994, as amended at 63 FR 11619, Mar. 10, 1998; 69 FR 30592, May 28, 2004; 72 FR 51196, Sept. 6, 2007]

APPENDIX A TO PART 209—STATEMENT OF AGENCY POLICY CONCERNING ENFORCEMENT OF THE FEDERAL RAILROAD SAFETY LAWS

The Federal Railroad Administration (''fra'') enforces the federal railroad safety statutes under delegation from the Secretary of Transportation. See 49 CFR 1.49 (c), (d), (f), (g), and (m). Those statutes include the Federal Railroad Safety Act of 1970 (''Safety Act''), 45 U.S.C. 421 *et seq.*, and a group of statutes enacted prior to 1970 referred to collectively herein as the ''older safety statutes'': The Safety Appliance Acts, 45 U.S.C. 1–16; the Locomotive Inspection Act, 45 U.S.C. 22–34; the Accident Reports Act, 45 U.S.C. 38–43; the Hours of Service Act, 45 U.S.C. 61–64b; and the Signal Inspection Act, 49 App. U.S.C. 26. Regulations implementing those statutes are found at 49 CFR parts 213 through 236. The Rail Safety Improvement Act of 1988 (Pub. L. No. 100–342, enacted June 22, 1988) (''RSIA'') raised the maximum civil penalties available under the railroad safety laws and made individuals liable for willful violations of those laws. FRA also enforces the Hazardous Materials Transportation Act, 49 App. U.S.C. 1801 *et seq.*, as it pertains to the shipment or transportation of hazardous materials by rail.

THE CIVIL PENALTY PROCESS

The front lines in the civil penalty process are the FRA safety inspectors: FRA employs over 300 inspectors, and their work is supplemented by approximately 100 inspectors from states participating in enforcement of the federal rail safety laws. These inspectors routinely inspect the equipment, track, and signal systems and observe the operations of the nation's railroads. They also investigate hundreds of complaints filed annually by those alleging noncompliance with the laws. When inspection or complaint investigation reveals noncompliance with the laws, each noncomplying condition or action is listed on an inspection report. Where the inspector determines that the best method of promoting compliance is to assess a civil penalty, he or she prepares a violation report, which is essentially a recommendation to the FRA Office of Chief Counsel to assess a penalty based on the evidence provided in or with the report.

In determining which instances of noncompliance merit penalty recommendations, the inspector considers:

(1) The inherent seriousness of the condition or action;

(2) The kind and degree of potential safety hazard the condition or action poses in light of the immediate factual situation;

(3) Any actual harm to persons or property already caused by the condition or action;

(4) The offending person's (*i.e.*, railroad's or individual's) general level of current compliance as revealed by the inspection as a whole;

(5) The person's recent history of compliance with the relevant set of regulations, especially at the specific location or division of the railroad involved;

(6) Whether a remedy other than a civil penalty (ranging from a warning on up to an emergency order) is more appropriate under all of the facts; and

(7) Such other factors as the immediate circumstances make relevant.

The civil penalty recommendation is reviewed at the regional level by a specialist in the subject matter involved, who requires correction of any technical flaws and determines whether the recommendation is consistent with national enforcement policy in

similar circumstances. Guidance on that policy in close cases is sometimes sought from Office of Safety headquarters. Violation reports that are technically and legally sufficient and in accord with FRA policy are sent from the regional office to the Office of Chief Counsel.

The exercise of this discretion at the field and regional levels is a vital part of the enforcement process, ensuring that the exacting and time-consuming civil penalty process is used to address those situations most in need of the deterrent effect of penalties. FRA exercises that discretion with regard to individual violators in the same manner it does with respect to railroads.

The Office of Chief Counsel's Safety Division reviews each violation report it receives from the regional offices for legal sufficiency and assesses penalties based on those allegations that survive that review. Historically, the Division has returned to the regional offices less than five percent of the reports submitted in a given year, often with a request for further work and resubmission.

Where the violation was committed by a railroad, penalties are assessed by issuance of a penalty demand letter that summarizes the claims, encloses the violation report with a copy of all evidence on which FRA is relying in making its initial charge, and explains that the railroad may pay in full or submit, orally or in writing, information concerning any defenses or mitigating factors. The railroad safety statutes, in conjunction with the Federal Claims Collection Act, authorize FRA to adjust or compromise the initial penalty claims based on a wide variety of mitigating factors. This system permits the efficient collection of civil penalties in amounts that fit the actual offense without resort to time-consuming and expensive litigation. Over its history, FRA has had to request that the Attorney General bring suit to collect a penalty on only a very few occasions.

Once penalties have been assessed, the railroad is given a reasonable amount of time to investigate the charges. Larger railroads usually make their case before FRA in an informal conference covering a number of case files that have been issued and investigated since the previous conference. Thus, in terms of the negotiating time of both sides, economies of scale are achieved that would be impossible if each case were negotiated separately. The settlement conferences, held either in Washington or another mutually agreed on location, include technical experts from both FRA and the railroad as well as lawyers for both parties. In addition to allowing the two sides to make their cases for the relative merits of the various claims, these conferences also provide a forum for addressing current compliance problems. Smaller railroads usually prefer to handle negotiations through the mail or over the telephone, often on a single case at a time. Once the two sides have agreed to an amount on each case, that agreement is put in writing and a check is submitted to FRA's accounting division covering the full amount agreed on.

Cases brought under the Hazardous Materials Transportation Act, 49 App. U.S.C. 1801 *et seq.*, are, due to certain statutory requirements, handled under more formal administrative procedures. *See* 49 CFR part 209, subpart B.

CIVIL PENALTIES AGAINST INDIVIDUALS

The RSIA amended the penalty provisions of the railroad safety statutes to make them applicable to any ''person (including a railroad and any manager, supervisor, official, or other employee or agent of a railroad)'' who fails to comply with the regulations or statutes. *E.g.*, section 3 of the RSIA, amending section 209 of the Safety Act. However, the RSIA also provided that civil penalties may be assessed against individuals ''only for willful violations.''

Thus, any individual meeting the statutory description of ''person'' is liable for a civil penalty for a willful violation of, or for willfully causing the violation of, the safety statutes or regulations. Of course, as has traditionally been the case with respect to acts of noncompliance by railroads, the FRA field inspector exercises discretion in deciding which situations call for a civil penalty assessment as the best method of ensuring compliance. The inspector has a range of options, including an informal warning, a more formal warning letter issued by the Safety Division of the Office of Chief Counsel, recommendation of a civil penalty assessment, recommendation of disqualification or suspension from safety-sensitive service, or, under the most extreme circumstances, recommendation of emergency action.

The threshold question in any alleged violation by an individual will be whether that violation was ''willful.'' (Note that section 3(a) of the RSIA, which authorizes suspension or disqualification of a person whose violation of the safety laws has shown him or her to be unfit for safety-sensitive service, does not require a showing of willfulness. Regulations implementing that provision are found at 49 CFR part 209, subpart D.) FRA proposed this standard of liability when, in 1987, it originally proposed a statutory revision authorizing civil penalties against individuals. FRA believed then that it would be too harsh a system to collect fines from individuals on a strict liability basis, as the safety statutes permit FRA to do with respect to railroads. FRA also believed that even a reasonable care standard (*e.g.*, the Hazardous Materials Transportation Act's standard for civil penalty liability, 49 U.S.C. 1809(a)) would subject individuals to civil penalties

in more situations than the record warranted. Instead, FRA wanted the authority to penalize those who violate the safety laws through a purposeful act of free will.

Thus, FRA considers a ''willful'' violation to be one that is an intentional, voluntary act committed either with knowledge of the relevant law or reckless disregard for whether the act violated the requirements of the law. Accordingly, neither a showing of evil purpose (as is sometimes required in certain criminal cases) nor actual knowledge of the law is necessary to prove a willful violation, but a level of culpability higher than negligence must be demonstrated. *See Trans World Airlines, Inc.* v. *Thurston,* 469 U.S. 111 (1985); *Brock* v. *Morello Bros. Constr., Inc.* 809 F.2d 161 (1st Cir. 1987); and *Donovan* v. *Williams Enterprises, Inc.,* 744 F.2d 170 (D.C. Cir. 1984).

Reckless disregard for the requirements of the law can be demonstrated in many ways. Evidence that a person was trained on or made aware of the specific rule involved—or, as is more likely, its corresponding industry equivalent—would suffice. Moreover, certain requirements are so obviously fundamental to safe railroading (*e.g.,* the prohibition against disabling an automatic train control device) that any violation of them, regardless of whether the person was actually aware of the prohibition, should be seen as reckless disregard of the law. *See Brock, supra,* 809 F.2d 164. Thus, a lack of subjective knowledge of the law is no impediment to a finding of willfulness. If it were, a mere denial of the content of the particular regulation would provide a defense. Having proposed use of the word ''willful,'' FRA believes it was not intended to insulate from liability those who simply claim—contrary to the established facts of the case—they had no reason to believe their conduct was wrongful.

A willful violation entails knowledge of the facts constituting the violation, but actual, subjective knowledge need not be demonstrated. It will suffice to show objectively what the alleged violator must have known of the facts based on reasonable inferences drawn from the circumstances. For example, a person shown to have been responsible for performing an initial terminal air brake test that was not in fact performed would not be able to defend against a charge of a willful violation simply by claiming subjective ignorance of the fact that the test was not performed. If the facts, taken as a whole, demonstrated that the person was responsible for doing the test and had no reason to believe it was performed by others, and if that person was shown to have acted with actual knowledge of or reckless disregard for the law requiring such a test, he or she would be subject to a civil penalty.

This definition of ''willful'' fits squarely within the parameters for willful acts laid out by Congress in the RSIA and its legislative history. Section 3(a) of the RSIA amends the Safety Act to provide:

For purposes of this section, an individual shall be deemed not to have committed a willful violation where such individual has acted pursuant to the direct order of a railroad official or supervisor, under protest communicated to the supervisor. Such individual shall have the right to document such protest.

As FRA made clear when it recommended legislation granting individual penalty authority, a railroad employee should not have to choose between liability for a civil penalty or insubordination charges by the railroad. Where an employee (or even a supervisor) violates the law under a direct order from a supervisor, he or she does not do so of his or her free will. Thus, the act is not a voluntary one and, therefore, not willful under FRA's definition of the word. Instead, the action of the person who has directly ordered the commission of the violation is itself a willful violation subjecting that person to a civil penalty. As one of the primary sponsors of the RSIA said on the Senate floor:

This amendment also seeks to clarify that the purpose of imposing civil penalties against individuals is to deter those who, of their free will, decide to violate the safety laws. The purpose is not to penalize those who are ordered to commit violations by those above them in the railroad chain of command. Rather, in such cases, the railroad official or supervisor who orders the others to violate the law would be liable for any violations his order caused to occur. One example is the movement of railroad cars or locomotives that are actually known to contain certain defective conditions. A train crew member who was ordered to move such equipment would not be liable for a civil penalty, and his participation in such movements could not be used against him in any disqualification proceeding brought by FRA.

133 Cong. Rec. S.15899 (daily ed. Nov. 5, 1987) (remarks of Senator Exon).

It should be noted that FRA will apply the same definition of ''willful'' to corporate acts as is set out here with regard to individual violations. Although railroads are strictly liable for violations of the railroad safety laws and deemed to have knowledge of those laws, FRA's penalty schedules contain, for each regulation, a separate amount earmarked as the initial assessment for willful violations. Where FRA seeks such an extraordinary penalty from a railroad, it will apply the definition of ''willful'' set forth above. In such cases—as in all civil penalty cases brought by FRA—the aggregate knowledge and actions of the railroad's managers, supervisors, employees, and other agents will

be imputed to the railroad. Thus, in situations that FRA decides warrant a civil penalty based on a willful violation, FRA will have the option of citing the railroad and/or one or more of the individuals involved. In cases against railroads other than those in which FRA alleges willfulness or in which a particular regulation imposes a special standard, the principles of strict liability and presumed knowledge of the law will continue to apply.

The RSIA gives individuals the right to protest a direct order to violate the law and to document the protest. FRA will consider such protests and supporting documentation in deciding whether and against whom to cite civil penalties in a particular situation. Where such a direct order has been shown to have been given as alleged, and where such a protest is shown to have been communicated to the supervisor, the person or persons communicating it will have demonstrated their lack of willfulness. Any documentation of the protest will be considered along with all other evidence in determining whether the alleged order to violate was in fact given.

However, the absence of such a protest will not be viewed as warranting a presumption of willfulness on the part of the employee who might have communicated it. The statute says that a person who communicates such a protest shall be deemed not to have acted willfully; it does not say that a person who does not communicate such a protest will be deemed to have acted willfully. FRA would have to prove from all the pertinent facts that the employee willfully violated the law. Moreover, the absence of a protest would not be dispositive with regard to the willfulness of a supervisor who issued a direct order to violate the law. That is, the supervisor who allegedly issued an order to violate will not be able to rely on the employee's failure to protest the order as a complete defense. Rather, the issue will be whether, in view of all pertinent facts, the supervisor intentionally and voluntarily ordered the employee to commit an act that the supervisor knew would violate the law or acted with reckless disregard for whether it violated the law.

FRA exercises the civil penalty authority over individuals through informal procedures very similar to those used with respect to railroad violations. However, FRA varies those procedures somewhat to account for differences that may exist between the railroad's ability to defend itself against a civil penalty charge and an individual's ability to do so. First, when the field inspector decides that an individual's actions warrant a civil penalty recommendation and drafts a violation report, the inspector or the regional director informs the individual in writing of his or her intention to seek assessment of a civil penalty and the fact that a violation report has been transmitted to the Office of Chief Counsel. This ensures that the individual has the opportunity to seek counsel, preserve documents, or take any other necessary steps to aid his or her defense at the earliest possible time.

Second, if the Office of Chief Counsel concludes that the case is meritorious and issues a penalty demand letter, that letter makes clear that FRA encourages discussion, through the mail, over the telephone or in person, of any defenses or mitigating factors the individual may wish to raise. That letter also advises the individual that he or she may wish to obtain representation by an attorney and/or labor representative. During the negotiation stage, FRA considers each case individually on its merits and gives due weight to whatever information the alleged violator provides.

Finally, in the unlikely event that a settlement cannot be reached, FRA sends the individual a letter warning of its intention to request that the Attorney General sue for the initially proposed amount and giving the person a sufficient interval (*e.g.*, 30 days) to decide if that is the only alternative.

FRA believes that the intent of Congress would be violated if individuals who agree to pay a civil penalty or are ordered to do so by a court are indemnified for that penalty by the railroad or another institution (such as a labor organization). Congress intended that the penalties have a deterrent effect on individual behavior that would be lessened, if not eliminated, by such indemnification.

Although informal, face-to-face meetings are encouraged during the negotiation of a civil penalty charge, the RSIA does not require that FRA give individuals or railroads the opportunity for a formal, trial-type administrative hearing as part of the civil penalty process. FRA does not provide that opportunity because such administrative hearings would be likely to add significantly to the costs an individual would have to bear in defense of a safety claim (and also to FRA's enforcement expenses) without shedding any more light on what resolution of the matter is fair than would the informal procedures set forth here. Of course, should an individual or railroad decide not to settle, that person would be entitled to a trial *de novo* when FRA, through the Attorney General, sued to collect the penalty in the appropriate United States district court.

PENALTY SCHEDULES; ASSESSMENT OF MAXIMUM PENALTIES

As recommended by the Department of Transportation in its initial proposal for rail safety legislative revisions in 1987, the RSIA raised the maximum civil penalties for violations of the safety regulations. Under the Hours of Service Act, the penalty was changed from a flat $500 to a penalty of ''up to $1,000, as the Secretary of Transportation

deems reasonable.'' Under all the other statutes, the maximum penalty was raised from $2,500 to $10,000 per violation, except that ''where a grossly negligent violation or pattern of repeated violations has created an imminent hazard of death or injury to persons, or has caused death or injury,'' a penalty of up to $20,000 per violation may be assessed.

The Rail Safety Enforcement and Review Act of 1992 (RSERA) increased the maximum penalty from $1,000 to $10,000 and in some cases, $20,000 for a violation of the Hours of Service Laws, making these penalty amounts uniform with those of FRA's other regulatory provisions. RSERA also increased the minimum civil monetary penalty from $250 to $500 for all of FRA's regulatory provisions. The Federal Civil Penalties Inflation Adjustment Act of 1990, Public Law 101–410, 104 Stat. 890, note, as amended by Section 31001(s)(1) of the Debt Collection Improvement Act of 1996 Public Law 104–134, 110 Stat. 1321–373, April 26, 1996 required that agencies adjust by regulation each maximum civil monetary penalty within the agency's jurisdiction for inflation and make subsequent adjustments once every four years after the initial adjustment. Accordingly, FRA's maximum civil monetary penalties have been adjusted.

FRA's traditional practice has been to issue penalty schedules assigning to each particular regulation specific dollar amounts for initial penalty assessments. The schedule (except where issued after notice and an opportunity for comment) constitutes a statement of agency policy, and is ordinarily issued as an appendix to the relevant part of the Code of Federal Regulations. For each regulation, the schedule shows two amounts within the $550 to $16,000 range in separate columns, the first for ordinary violations, the second for willful violations (whether committed by railroads or individuals). In one instance—part 231—the schedule refers to sections of the relevant FRA defect code rather than to sections of the CFR text. Of course, the defect code, which is simply a reorganized version of the CFR text used by FRA to facilitate computerization of inspection data, is substantively identical to the CFR text.

The schedule amounts are meant to provide guidance as to FRA's policy in predictable situations, not to bind FRA from using the full range of penalty authority where extraordinary circumstances warrant. The Senate report on the bill that became the RSIA stated:

It is expected that the Secretary would act expeditiously to set penalty levels commensurate with the severity of the violations, with imposition of the maximum penalty reserved for violation of any regulation where warranted by exceptional circumstances. S. Rep. No. 100–153, 10th Cong., 2d Sess. 8 (1987).

Accordingly, under each of the schedules (ordinarily in a footnote), and regardless of the fact that a lesser amount might be shown in both columns of the schedule, FRA reserves the right to assess the statutory maximum penalty of up to $27,000 per violation where a grossly negligent violation has created an imminent hazard of death or injury. This authority to assess a penalty for a single violation above $11,000 and up to $27,000 is used only in very exceptional cases to penalize egregious behavior. Where FRA avails itself of this right to use the higher penalties in place of the schedule amount it so indicates in its penalty demand letter.

THE EXTENT AND EXERCISE OF FRA'S SAFETY JURISDICTION

The Safety Act and, as amended by the RSIA, the older safety statutes apply to ''railroads.'' Section 202(e) of the Safety Act defines railroad as follows:

The term ''railroad'' as used in this title means all forms of non-highway ground transportation that run on rails or electromagnetic guideways, including (1) commuter or other short-haul rail passenger service in a metropolitan or suburban area, as well as any commuter rail service which was operated by the Consolidated Rail Corporation as of January 1, 1979, and (2) high speed ground transportation systems that connect metropolitan areas, without regard to whether they use new technologies not associated with traditional railroads. Such term does not include rapid transit operations within an urban area that are not connected to the general railroad system of transportation.

Prior to 1988, the older safety statutes had applied only to common carriers engaged in interstate or foreign commerce by rail. The Safety Act, by contrast, was intended to reach as far as the Commerce Clause of the Constitution (i.e., to all railroads that affect interstate commerce) rather than be limited to common carriers actually engaged in interstate commerce. In reporting out the bill that became the 1970 Safety Act, the House Committee on Interstate and Foreign Commerce stated:

The Secretary's authority to regulate extends to all areas of railroad safety. This legislation is intended to encompass all those means of rail transportation as are commonly included within the term. Thus, ''railroad'' is not limited to the confines of ''common carrier by railroad'' as that language is defined in the Interstate Commerce Act.

H.R. Rep. No. 91–1194, 91st Cong., 2d Sess. at 16 (1970).

FRA's jurisdiction was bifurcated until, in 1988, the RSIA amended the older safety statutes to make them coextensive with the Safety Act by making them applicable to railroads and incorporating the Safety Act's

definition of the term (*e.g.*, 45 U.S.C. 16, as amended). The RSIA also made clear that FRA's safety jurisdiction is not confined to entities using traditional railroad technology. The new definition of ''railroad'' emphasized that all non-highway high speed ground transportation systems—regardless of technology used—would be considered railroads.

Thus, with the exception of self-contained urban rapid transit systems, FRA's statutory jurisdiction extends to all entities that can be construed as railroads by virtue of their providing non-highway ground transportation over rails or electromagnetic guideways, and will extend to future railroads using other technologies not yet in use. For policy reasons, however, FRA does not exercise jurisdiction under all of its regulations to the full extent permitted by statute. Based on its knowledge of where the safety problems were occurring at the time of its regulatory action and its assessment of the practical limitations on its role, FRA has, in each regulatory context, decided that the best option was to regulate something less than the total universe of railroads.

For example, all of FRA's regulations exclude from their reach railroads whose entire operations are confined to an industrial installation (i.e., ''plant railroads''), such as those in steel mills that do not go beyond the plant's boundaries. E.g., 49 CFR 225.3(a)(1) (accident reporting regulations). Some rules exclude passenger operations that are not part of the general railroad system (such as some tourist railroads) only if they meet the definition of ''insular.'' E.g., 49 CFR 225.3(a)(3) (accident reporting) and 234.3(c) (grade crossing signal safety). Other regulations exclude not only plant railroads but all other railroads that are not operated as a part of, or over the lines of, the general railroad system of transportation. E.g., 49 CFR 214.3 (railroad workplace safety).

By ''general railroad system of transportation,'' FRA refers to the network of standard gage track over which goods may be transported throughout the nation and passengers may travel between cities and within metropolitan and suburban areas. Much of this network is interconnected, so that a rail vehicle can travel across the nation without leaving the system. However, mere physical connection to the system does not bring trackage within it. For example, trackage within an industrial installation that is connected to the network only by a switch for the receipt of shipments over the system is not a part of the system.

Moreover, portions of the network may lack a physical connection but still be part of the system by virtue of the nature of operations that take place there. For example, the Alaska Railroad is not physically connected to the rest of the general system but is part of it. The Alaska Railroad exchanges freight cars with other railroads by car float and exchanges passengers with interstate carriers as part of the general flow of interstate commerce. Similarly, an intercity high speed rail system with its own right of way would be part of the general system although not physically connected to it. The presence on a rail line of any of these types of railroad operations is a sure indication that such trackage is part of the general system: the movement of freight cars in trains outside the confines of an industrial installation, the movement of intercity passenger trains, or the movement of commuter trains within a metropolitan or suburban area. Urban rapid transit operations are ordinarily not part of the general system, but may have sufficient connections to that system to warrant exercise of FRA's jurisdiction (*see* discussion of passenger operations, below). Tourist railroad operations are not inherently part of the general system and, unless operated over the lines of that system, are subject to few of FRA's regulations.

The boundaries of the general system are not static. For example, a portion of the system may be purchased for the exclusive use of a single private entity and all connections, save perhaps a switch for receiving shipments, severed. Depending on the nature of the operations, this could remove that portion from the general system. The system may also grow, as with the establishment of intercity service on a brand new line. However, the same trackage cannot be both inside and outside of the general system depending upon the time of day. If trackage is part of the general system, restricting a certain type of traffic over that trackage to a particular portion of the day does not change the nature of the line—it remains the general system.

Of course, even where a railroad operates outside the general system, other railroads that are definitely part of that system may have occasion to enter the first railroad's property (*e.g.*, a major railroad goes into a chemical or auto plant to pick up or set out cars). In such cases, the railroad that is part of the general system remains part of that system while inside the installation; thus, all of its activities are covered by FRA's regulations during that period. The plant railroad itself, however, does not get swept into the general system by virtue of the other railroad's activity, except to the extent it is liable, as the track owner, for the condition of its track over which the other railroad operates during its incursion into the plant. Of course, in the opposite situation, where the plant railroad itself operates beyond the plant boundaries on the general system, it becomes a railroad with respect to those particular operations, during which its equipment, crew, and practices would be subject to FRA's regulations.

In some cases, the plant railroad leases track immediately adjacent to its plant from the general system railroad. Assuming such a lease provides for, and actual practice entails, the exclusive use of that trackage by the plant railroad and the general system railroad for purposes of moving only cars shipped to or from the plant, the lease would remove the plant railroad's operations on that trackage from the general system for purposes of FRA's regulations, as it would make that trackage part and parcel of the industrial installation. (As explained above, however, the track itself would have to meet FRA's standards if a general system railroad operated over it. *See* 49 CFR 213.5 for the rules on how an owner of track may assign responsibility for it.) A lease or practice that permitted other types of movements by general system railroads on that trackage would, of course, bring it back into the general system, as would operations by the plant railroad indicating it was moving cars on such trackage for other than its own purposes (*e.g.*, moving cars to neighboring industries for hire).

FRA exercises jurisdiction over tourist, scenic, and excursion railroad operations whether or not they are conducted on the general railroad system. There are two exceptions: (1) operations of less than 24-inch gage (which, historically, have never been considered railroads under the Federal railroad safety laws); and (2) operations that are off the general system and ''insular'' (defined below).

Insularity is an issue only with regard to tourist operations over trackage outside of the general system used exclusively for such operations. FRA considers a tourist operation to be insular if its operations are limited to a separate enclave in such a way that there is no reasonable expectation that the safety of any member of the public'except a business guest, a licensee of the tourist operation or an affiliated entity, or a trespasser'would be affected by the operation. A tourist operation will not be considered insular if one or more of the following exists on its line:

•A public highway-rail crossing that is in use;

•An at-grade rail crossing that is in use;

•A bridge over a public road or waters used for commercial navigation; or

•A common corridor with a railroad, *i.e.*, its operations are within 30 feet of those of any railroad.

When tourist operations are conducted on the general system, FRA exercises jurisdiction over them, and all of FRA's pertinent regulations apply to those operations unless a waiver is granted or a rule specifically excepts such operations (*e.g.*, the passenger equipment safety standards contain an exception for these operations, 49 CFR 238.3(c)(3), even if conducted on the general system). When a tourist operation is conducted only on track used exclusively for that purpose it is not part of the general system. The fact that a tourist operation has a switch that connects it to the general system does not make the tourist operation part of the general system if the tourist trains do not enter the general system and the general system railroad does not use the tourist operation's trackage for any purpose other than delivering or picking up shipments to or from the tourist operation itself.

If a tourist operation off the general system is insular, FRA does not exercise jurisdiction over it, and none of FRA's rules apply. If, however, such an operation is not insular, FRA exercises jurisdiction over the operation, and some of FRA's rules (*i.e.*, those that specifically apply beyond the general system to such operations) will apply. For example, FRA's rules on accident reporting, steam locomotives, and grade crossing signals apply to these non-insular tourist operations (*see* 49 CFR 225.3, 230.2 amd 234.3), as do all of FRA's procedural rules (49 CFR parts 209, 211, and 216) and the Federal railroad safety statutes themselves.

In drafting safety rules, FRA has a specific obligation to consider financial, operational, or other factors that may be unique to tourist operations. 49 U.S.C. 20103(f). Accordingly, FRA is careful to consider those factors in determining whether any particular rule will apply to tourist operations. Therefore, although FRA asserts jurisdiction quite broadly over these operations, we work to ensure that the rules we issue are appropriate to their somewhat special circumstances.

It is important to note that FRA's exercise of its regulatory authority on a given matter does not preclude it from subsequently amending its regulations on that subject to bring in railroads originally excluded. More important, the self-imposed restrictions on FRA's exercise of regulatory authority in no way constrain its exercise of emergency order authority under section 203 of the Safety Act. That authority was designed to deal with imminent hazards not dealt with by existing regulations and/or so dangerous as to require immediate, *ex parte* action on the government's part. Thus, a railroad excluded from the reach of any of FRA's regulations is fully within the reach of FRA's emergency order authority, which is coextensive with FRA's statutory jurisdiction over all railroads.

FRA'S POLICY ON JURISDICTION OVER PASSENGER OPERATIONS

Under the Federal railroad safety laws, FRA has jurisdiction over all railroads except ''rapid transit operations in an urban area that are not connected to the general railroad system of transportation.'' 49 U.S.C.

20102. Within the limits imposed by this authority, FRA exercises jurisdiction over all railroad passenger operations, regardless of the equipment they use, unless FRA has specifically stated below an exception to its exercise of jurisdiction for a particular type of operation. This policy is stated in general terms and does not change the reach of any particular regulation under its applicability section. That is, while FRA may generally assert jurisdiction over a type of operation here, a particular regulation may exclude that kind of operation from its reach. Therefore, this statement should be read in conjunction with the applicability sections of all of FRA's regulations.

INTERCITY PASSENGER OPERATIONS

FRA exercises jurisdiction over all intercity passenger operations. Because of the nature of the service they provide, standard gage intercity operations are all considered part of the general railroad system, even if not physically connected to other portions of the system. Other intercity passenger operations that are not standard gage (such as a magnetic levitation system) are within FRA's jurisdiction even though not part of the general system.

COMMUTER OPERATIONS

FRA exercises jurisdiction over all commuter operations. Congress apparently intended that FRA do so when it enacted the Federal Railroad Safety Act of 1970, and made that intention very clear in the 1982 and 1988 amendments to that act. FRA has attempted to follow that mandate consistently. A commuter system's connection to other railroads is not relevant under the rail safety statutes. In fact, FRA considers commuter railroads to be part of the general railroad system regardless of such connections.

FRA will presume that an operation is a commuter railroad if there is a statutory determination that Congress considers a particular service to be commuter rail. For example, in the Northeast Rail Service Act of 1981, 45 U.S.C. 1104(3), Congress listed specific commuter authorities. If that presumption does not apply, and the operation does not meet the description of a system that is presumptively urban rapid transit (see below), FRA will determine whether a system is commuter or urban rapid transit by analyzing all of the system's pertinent facts. FRA is likely to consider an operation to be a commuter railroad if:

•The system serves an urban area, its suburbs, and more distant outlying communities in the greater metropolitan area,

•The system's primary function is moving passengers back and forth between their places of employment in the city and their homes within the greater metropolitan area, and moving passengers from station to station within the immediate urban area is, at most, an incidental function, and

•The vast bulk of the system's trains are operated in the morning and evening peak periods with few trains at other hours.

Examples of commuter railroads include Metra and the Northern Indiana Commuter Transportation District in the Chicago area; Virginia Railway Express and MARC in the Washington area; and Metro-North, the Long Island Railroad, New Jersey Transit, and the Port Authority Trans Hudson (PATH) in the New York area.

OTHER SHORT HAUL PASSENGER SERVICE

The federal railroad safety statutes give FRA authority over ''commuter or other short-haul railroad passenger service in a metropolitan or suburban area.'' 49 U.S.C. 20102. This means that, in addition to commuter service, there are other short-haul types of service that Congress intended that FRA reach. For example, a passenger system designed primarily to move intercity travelers from a downtown area to an airport, or from an airport to a resort area, would be one that does not have the transportation of commuters within a metropolitan area as its primary purpose. FRA would ordinarily exercise jurisdiction over such a system as ''other short-haul service'' unless it meets the definition of urban rapid transit and is not connected in a significant way to the general system.

URBAN RAPID TRANSIT OPERATIONS

One type of short-haul passenger service requires special treatment under the safety statutes: ''rapid transit operations in an urban area.'' Only these operations are excluded from FRA's jurisdiction, and only if they are ''not connected to the general railroad system.'' FRA will presume that an operation is an urban rapid transit operation if the system is not presumptively a commuter railroad (see discussion above) the operation is a subway or elevated operation with its own track system on which no other railroad may operate, has no highway-rail crossings at grade, operates within an urban area, and moves passengers from station to station within the urban area as one of its major functions.

Where neither the commuter railroad nor urban rapid transit presumptions applies, FRA will look at all of the facts pertinent to a particular operation to determine its proper characterization. FRA is likely to consider an operation to be urban rapid transit if:

•The operation serves an urban area (and may also serve its suburbs),

•Moving passengers from station to station within the urban boundaries is a major function of the system and there are multiple

station stops within the city for that purpose (such an operation could still have the transportation of commuters as one of its major functions without being considered a commuter railroad), and

•The system provides frequent train service even outside the morning and evening peak periods.

Examples of urban rapid transit systems include the Metro in the Washington, D.C. area, CTA in Chicago, and the subway systems in New York, Boston, and Philadelphia. The type of equipment used by such a system is not determinative of its status. However, the kinds of vehicles ordinarily associated with street railways, trolleys, subways, and elevated railways are the types of vehicles most often used for urban rapid transit operations.

FRA can exercise jurisdiction over a rapid transit operation only if it is connected to the general railroad system, but need not exercise jurisdiction over every such operation that is so connected. FRA is aware of several different ways that rapid transit operations can be connected to the general system. Our policy on the exercise of jurisdiction will depend upon the nature of the connection(s). In general, a connection that involves operation of transit equipment as a part of, or over the lines of, the general system will trigger FRA's exercise of jurisdiction. Below, we review some of the more common types of connections and their effect on the agency's exercise of jurisdiction. This is not meant to be an exhaustive list of connections.

RAPID TRANSIT CONNECTIONS SUFFICIENT TO TRIGGER FRA'S EXERCISE OF JURISDICTION

Certain types of connections to the general railroad system will cause FRA to exercise jurisdiction over the rapid transit line *to the extent it is connected*. FRA will exercise jurisdiction over the portion of a rapid transit operation that is conducted as a part of or over the lines of the general system. For example, rapid transit operations are conducted on the lines of the general system where the rapid transit operation and other railroad use the same track. FRA will exercise its jurisdiction over the operations conducted on the general system. In situations involving joint use of the same track, it does not matter that the rapid transit operation occupies the track only at times when the freight, commuter, or intercity passenger railroad that shares the track is not operating. While such time separation could provide the basis for waiver of certain of FRA's rules (see 49 CFR part 211), it does not mean that FRA will not exercise jurisdiction. However, FRA will exercise jurisdiction over only the portions of the rapid transit operation that are conducted on the general system. For example, a rapid transit line that operates over the general system for a portion of its length but has significant portions of street railway that are not used by conventional railroads would be subject to FRA's rules only with respect to the general system portion. The remaining portions would not be subject to FRA's rules. If the non-general system portions of the rapid transit line are considered a ''rail fixed guideway system'' under 49 CFR Part 659, those rules, issued by the Federal Transit Administration (FTA), would apply to them.

Another connection to the general system sufficient to warrant FRA's exercise of jurisdiction is a railroad crossing at grade where the rapid transit operation and other railroad cross each other's tracks. In this situation, FRA will exercise its jurisdiction sufficiently to assure safe operations over the at-grade railroad crossing. FRA will also exercise jurisdiction to a limited extent over a rapid transit operation that, while not operated on the same tracks as the conventional railroad, is connected to the general system by virtue of operating in a shared right-of-way involving joint control of trains. For example, if a rapid transit line and freight railroad were to operate over a movable bridge and were subject to the same authority concerning its use (*e.g.*, the same tower operator controls trains of both operations), FRA will exercise jurisdiction in a manner sufficient to ensure safety at this point of connection. Also, where transit operations share highway-rail grade crossings with conventional railroads, FRA expects both systems to observe its signal rules. For example, FRA expects both railroads to observe the provision of its rule on grade crossing signals that requires prompt reports of warning system malfunctions. *See* 49 CFR part 234. FRA believes these connections present sufficient intermingling of the rapid transit and general system operations to pose significant hazards to one or both operations and, in the case of highway-rail grade crossings, to the motoring public. The safety of highway users of highway-rail grade crossings can best be protected if they get the same signals concerning the presence of any rail vehicles at the crossing and if they can react the same way to all rail vehicles.

RAPID TRANSIT CONNECTIONS NOT SUFFICIENT TO TRIGGER FRA'S EXERCISE OF JURISDICTION

Although FRA could exercise jurisdiction over a rapid transit operation based on any connection it has to the general railroad system, FRA believes there are certain connections that are too minimal to warrant the exercise of its jurisdiction. For example, a rapid transit system that has a switch for receiving shipments from the general system railroad is not one over which FRA would assert jurisdiction. This assumes that the switch is used only for that purpose. In that case, any entry onto the rapid transit line by the freight railroad would be for a very short

distance and solely for the purpose of dropping off or picking up cars. In this situation, the rapid transit line is in the same situation as any shipper or consignee; without this sort of connection, it cannot receive or offer goods by rail.

Mere use of a common right-of-way or corridor in which the conventional railroad and rapid transit operation do not share any means of train control, have a rail crossing at grade, or operate over the same highway-rail grade crossings would not trigger FRA's exercise of jurisdiction. In this context, the presence of intrusion detection devices to alert one or both carriers to incursions by the other one would not be considered a means of common train control. These common rights of way are often designed so that the two systems function completely independently of each other. FRA and FTA will coordinate with rapid transit agencies and railroads wherever there are concerns about sufficient intrusion detection and related safety measures designed to avoid a collision between rapid transit trains and conventional equipment.

Where these very minimal connections exist, FRA will not exercise jurisdiction unless and until an emergency situation arises involving such a connection, which is a very unlikely event. However, if such a system is properly considered a rail fixed guideway system, FTA's rules (49 CFR part 659) will apply to it.

Coordination of the FRA and FTA Programs

FTA's rules on rail fixed guideway systems (49 CFR part 659) apply to any rapid transit systems or portions thereof not subject to FRA's rules. On rapid transit systems that are not sufficiently connected to the general railroad system to warrant FRA's exercise of jurisdiction (as explained above), FTA's rules will apply exclusively. On those rapid transit systems that are connected to the general system in such a way as warrant exercise of FRA's jurisdiction, only those portions of the rapid transit system that are connected to the general system will generally be subject to FRA's rules.

A rapid transit railroad may apply to FRA for a waiver of any FRA regulations. *See* 49 CFR part 211. FRA will seek FTA's views whenever a rapid transit operation petitions FRA for a waiver of its safety rules. In granting or denying any such waiver, FRA will make clear whether its rules do not apply to any segments of the operation so that it is clear where FTA's rules do apply.

Extraordinary Remedies

While civil penalties are the primary enforcement tool under the federal railroad safety laws, more extreme measures are available under certain circumstances. FRA has authority to issue orders directing compliance with the Federal Railroad Safety Act, the Hazardous Materials Transportation Act, the older safety statutes, or regulations issued under any of those statutes. *See* 45 U.S.C. 437(a) and (d), and 49 App. U.S.C. 1808(a). Such an order may issue only after notice and opportunity for a hearing in accordance with the procedures set forth in 49 CFR part 209, subpart C. FRA inspectors also have the authority to issue a special notice requiring repairs where a locomotive or freight car is unsafe for further service or where a segment of track does not meet the standards for the class at which the track is being operated. Such a special notice may be appealed to the regional director and the FRA Administrator. *See* 49 CFR part 216, subpart B.

FRA may, through the Attorney General, also seek injunctive relief in federal district court to restrain violations or enforce rules issued under the railroad safety laws. *See* 45 U.S.C. 439 and 49 App. U.S.C. 1810.

FRA also has the authority to issue, after notice and an opportunity for a hearing, an order prohibiting an individual from performing safety-sensitive functions in the rail industry for a specified period. This disqualification authority is exercised under procedures found at 49 CFR part 209, subpart D.

Criminal penalties are available for knowing violations of 49 U.S.C. 5104(b), or for willful or reckless violations of the Federal hazardous materials transportation law or a regulation issued under that law. See 49 U.S.C. Chapter 51, and 49 CFR 209.131, 133. The Accident Reports Act, 45 U.S.C. 39, also contains criminal penalties.

Perhaps FRA's most sweeping enforcement tool is its authority to issue emergency safety orders ''where an unsafe condition or practice, or a combination of unsafe conditions or practices, or both, create an emergency situation involving a hazard of death or injury to persons * * *'' 45 U.S.C. 432(a). After its issuance, such an order may be reviewed in a trial-type hearing. See 49 CFR 211.47 and 216.21 through 216.27. The emergency order authority is unique because it can be used to address unsafe conditions and practices whether or not they contravene an existing regulatory or statutory requirement. Given its extraordinary nature, FRA has used the emergency order authority sparingly.

[53 FR 52920, Dec. 29, 1988, as amended at 63 FR 11619, Mar. 10, 1998; 64 FR 62864, Nov. 17, 1999; 65 FR 42544, July 10, 2000; 69 FR 30592, May 28, 2004; 71 FR 77295, Dec. 26, 2006; 72 FR 51196, Sept. 6, 2007]

APPENDIX B TO PART 209—FEDERAL RAILROAD ADMINISTRATION GUIDELINES FOR INITIAL HAZARDOUS MATERIALS ASSESSMENTS

These guidelines establish benchmarks to be used in determining initial civil penalty assessments for violations of the Hazardous Materials Regulations (HMR). The guideline penalty amounts reflect the best judgment of the FRA Office of Safety Assurance and Compliance (RRS) and of the Safety Law Division of the Office of Chief Counsel (RCC) on the relative severity of the various violations routinely encountered by FRA inspectors on a scale of $250 to $50,000, except the maximum civil penalty is $100,000 if the violation results in death, serious illness or severe injury to any person, or substantial destruction of property, and a minimum $450 penalty applies to a violation related to training. (49 U.S.C. 5123) Unless otherwise specified, the guideline amounts refer to average violations, that is, violations involving a hazardous material with a medium level of hazard, and a violator with an average compliance history. In an ''average violation,'' the respondent has committed the acts due to a failure to exercise reasonable care under the circumstances (''knowingly''). For some sections, the guidelines contain a breakdown according to relative severity of the violation, for example, the guidelines for shipping paper violations at 49 CFR §§172.200–.203. *All* penalties in these guidelines are subject to change depending upon the circumstances of the particular case. The general duty sections, for example §§173.1 and 174.7, are not ordinarily cited as separate violations; they are primarily used as explanatory citations to demonstrate applicability of a more specific section where applicability is otherwise unclear.

FRA believes that infractions of the regulations that lead to personal injury are especially serious; this is directly in line with Department of Transportation policy that hazardous materials are only safe for transportation when they are securely sealed in a proper package. (Some few containers, such as tank cars of carbon dioxide, are designed to vent off excess internal pressure. They are exceptions to the ''securely sealed'' rule.) ''Personal injury'' has become somewhat of a term of art, especially in the fields of occupational safety and of accident reporting. To avoid confusion, these penalty guidelines use the notion of ''human contact'' to trigger penalty aggravation. In essence, *any* contact by a hazardous material on a person during transportation is a per se injury and proof will not be required regarding the extent of the physical contact or its consequences. When a violation of the Federal hazardous materials transportation law, an order issued thereunder, the Hazardous Materials Regulations or a special permit, approval, or order issued under those regulations results in death, serious illness or severe injury to any person, or substantial destruction of property, a maximum penalty of at least $50,000 and up to and including $100,000 shall always be assessed initially.

These guidelines are a preliminary assessment tool for FRA's use. They create no rights in any party. FRA is free to vary from them when it deems appropriate and may amend them from time to time without prior notice. Moreover, FRA is not bound by any amount it initially proposes should litigation become necessary. In fact, FRA reserves the express authority to amend the NOPV to seek a penalty of up to $50,000 for each violation, and up to $100,000 for any violation resulting in death, serious illness or severe injury to any person, or substantial destruction of property, at any time prior to issuance of an order. FRA periodically makes minor updates and revisions to these guidelines, and the most current version may be found on FRA's Web site at *http://www.fra.dot.gov*.

CIVIL PENALTY ASSESSMENT GUIDELINES

[As of December 26, 2006]

Emergency orders		Guideline amount[1]
EO16	Penalties for violations of EO16 vary depending on the circumstances	Varies.
EO17	Penalties for violations of EO17 vary depending on the circumstances	Varies.
	Failure to file annual report	$5,000.
EO23	Penalties for violations of EO23 vary depending on the circumstances	Varies.

[1] Any person who violates an emergency order issued under the authority of 49 U.S.C. Ch. 201 is subject to a civil penalty of at least $500 and not more than $11,000 per violation, except that where a grossly negligent violation or a pattern of repeated violations has created an imminent hazard of death or injury to persons, or has caused a death or injury, a penalty not to exceed $27,000 per violation may be assessed. Each day that the violation continues is a separate offense. 49 U.S.C. 21301; 28 U.S.C. 2461, note.

49 CFR section	Description	Guideline amount[2]
PART 107—HAZARDOUS MATERIALS PROGRAM PROCEDURES		
107.608	Failure to register or to renew registration. (Note: registration—or renewal—is mitigation.).	1,500.

49 CFR section	Description	Guideline amount [2]
107.620(d)	Failure to show records on proper request	2,000.
	Deliberate attempt to hide records-considerable aggravation possible.	Varies.
PART 171—GENERAL REGULATIONS		
171.2(a), (b), (c), (e), (f)	General duty sections—may be cited in support of another, more specific citation to the actual regulatory section violated.	
171.2(d)	Offering or accepting a hazardous material (hazmat or HM) without being registered.	1,500.
171.2(g)	Representing (marking, certifying, selling, or offering) a packaging as meeting regulatory specification when it does not.	8,000.
171.2(i)	Certifying that a hazardous material is offered for transportation in commerce in accordance with the regulations (packaged, marked, labeled, etc.) when it is not. A more specific citation to the actual underlying regulation violated should be used instead of this section, or accompanying this section, if possible.	5,000.
171.2(j)	Representing (by marking or otherwise) that a container or package for transportation of a hazardous material is safe, certified, or in compliance with the regulations when it is not.	8,000.
171.2(k)	Representing, marking, etc. for the presence of HM when no HM is present. (Mitigation required for shipments smaller than a carload, e.g., single drum penalty is $1,000.)	2,000.
171.2(l)	Tampering with (altering, removing, defacing, or destroying) any marking, label, placard, or description on a document required by hazmat law or regulations; unlawfully tampering with a package, container, motor vehicle, rail car, aircraft, or vessel used for the transportation of hazardous materials.	Varies—considerable aggravation possible.
171.2(m)	Falsifying or altering an exemption, approval, registration, or other grant of authority issued under hazmat regulations. Offering or transporting a hazmat under an altered exemption, approval, registration, or other grant of authority without the consent of the issuing authority. Representing, marking, certifying, or selling a packaging or container under an altered exemption, approval, registration, or other grant of authority.	Varies—considerable aggravation possible.
171.12	Import shipments—Importer not providing shipper and forwarding agent with U.S. requirements. Cannot be based on inference.	4,000.
	Import shipments—Failure to certify by shipper or forwarding agent.	2,000.
171.15	Failure to provide immediate notice of certain hazardous materials incidents.	6,000.
171.16	Failure to file incident report (form DOT 5800.1). (Multiple failures will aggravate the penalty.).	4,000.
PART 172—SHIPPING PAPERS		
172.200–.203	Offering hazardous materials for transportation when the material is not properly described on the shipping paper as required by §§ 172.200—.203. (The ''shipping paper'' is the document tendered by the shipper/offeror to the carrier. The original shipping paper contains the shipper's certification at § 172.204.) Considerable aggravation of penalties under these sections is possible, particularly in case involving undeclared hazmat.	
	—Undeclared shipment: offering a hazardous material without shipping papers, package markings, labels, or placards (see also §§ 172.300, 172.400, 172.500 for specific requirements).	15,000.

49 CFR section	Description	Guideline amount [2]
	—Information on the shipping paper is wrong to the extent that it caused or materially contributed to a reaction by emergency responders that aggravated the situation or caused or materially contributed to improper handling by the carrier that led to or materially contributed to a product release.	15,000.
	—Total lack of hazardous materials information on shipping paper. (Some shipping names alone contain sufficient information to reduce the guideline to the next lower level, but there may be such dangerous products that aggravation needs to be considered.).	7,500.
	—Some information is present, but the missing or improper description could cause mishandling by the carrier or a delay or error in emergency response.	5,000.
	—When the improper description is not likely to cause serious problem (technical defect).	2,000.
	—Shipping paper includes a hazardous material description and no hazardous material is present. (Technically, this is also a violation of § 171.2(k); it is presented here as a convenience.).	7,500.
	Failure to include emergency response information is covered at §§ 172.600–604; while the normal unit of violation for shipping papers is the whole document, failure to provide emergency response information is a separate violation.	
172.201(d)	Failure to put emergency response telephone number on shipping paper.	4,000.
172.201(e)	Failure to retain shipping paper for required period (1 year if carrier, 2 years if offeror).	7,500.
172.204	Offeror's failure to certify	2,000.
172.205	Hazardous waste manifest. (Applies only to defects in the Hazardous Waste Manifest form [EPA Form 8700–22 and 8700–22A]; shipping paper defects are cited and penalized under § 172.200–.203.).	Parallel the penalties for §§ 172.200–.203, depending on circumstances.
Marking:		
172.301	Failure to mark a non-bulk package as required (e.g., no commodity name on a 55-gallon drum). (Shipment is the unit of violation.).	1,000.
172.302	Failure to follow standards for marking bulk packaging.	2,000.
172.302(a)	ID number missing or in improper location. (The guideline is for a portable tank; for smaller bulk packages, the guideline should be mitigated downward.)	2,500.
172.302(b)	Failure to use the correct *size* of markings. (Note: If § 172.326(a) is also cited, it takes precedence and § 172.302(b) is not cited. Note also: the guideline is for a gross violation of marking size—½″ where 2″ is required—and mitigation should be considered for markings approaching the required size.)	2,000.
172.302(c)	Failure to place exemption number markings on bulk package.	2,000.
172.303	Prohibited marking. (Package is marked for a hazardous material and contains either another hazardous material or no hazardous material.)	
	—The marking is wrong and caused or contributed to a wrong emergency response.	10,000.
	—Use of a tank car stenciled for one commodity to transport another.	5,000.
	—Inconsistent marking; e.g., shipping name and ID number do not agree.	5,000.
	—Marked as a hazardous material when package does not contain a hazardous material.	2,000.
172.304	Obscured marking	2,000.
172.313	"Inhalation Hazard" not marked	2,500.

49 CFR section	Description	Guideline amount [2]
172.322	Failure to mark for MARINE POLLUTANT where required.	1,500.
172.325(a)	Improper, or missing, HOT mark for elevated temperature material.	1,500.
172.325(b)	Improper or missing commodity stencil	2,500.
172.326(a)	Failure to mark a portable tank with the commodity name.	2,500.
	Failure to have commodity name visible (''legible'') when portable tank is loaded on intermodal equipment.	2,500.
172.326(b)	Owner's/lessee's name not displayed	500.
172.326(c)	Failure to mark portable tank with ID number	2,500.
	Failure to have ID number visible when portable tank is loaded on intermodal equipment.	2,500.
172.330(a)(1)(i)	Offering/transporting hazardous material in a tank car that does not have the required ID number displayed on the car.	2,500.
172.330(a)(1)(ii)	Offering/transporting hazardous material in a tank car that does not have the required shipping name or common name stenciled on the car. This section ''lists'' the materials that require such markings on the tank. For tank car marking requirements for molten aluminum and molten sulfur, see § 172.325(b).	2,500.
172.330(c)	Failing to mark tank car as NON-ODORIZED or NOT ODORIZED when offering/transporting tank car or multi-unit tank car containing unodorized LPG.	2,500.
172.331(b)	Offering bulk packaging other than a portable tank, cargo tank, or tank car (e.g., a hopper car) not marked with ID number. (E.g., a hopper car carrying a hazardous substance, where a placard is not required).	2,500.
172.332	Improper display of identification number markings. Citation of this section and §§ 172.326(c) (portable tanks), 172.328 (cargo tanks), or 172.330 (tank cars) does not create two separate violations.	2,000.
172.334(a)	Displaying ID numbers on a RADIOACTIVE, EXPLOSIVES 1.1, 1.2, 1.3, 1.4, 1.5, or 1.6, or DANGEROUS, or subsidiary hazard placard.	4,000.
172.334(b)	—Improper display of ID number that caused or contributed to a wrong emergency response.	15,000.
	—Improper display of ID number that could cause carrier mishandling or minor error in emergency response.	5,000.
	—Technical error	2,000.
172.334(f)	Displaying ID number on orange panel not in proximity to the placard.	1,500.
Labeling:		
172.400–.406	Failure to label properly. (See also § 172.301 regarding the marking of packages.).	2,500.
Placarding:		
172.502	—Placarded as hazardous material when car does not contain a hazardous material.	2,000.
	—Hazardous material is present, but the placard does not represent hazard of the contents.	4,000.
	—Display of sign or device that could be confused with regulatory placard. Photograph or good, clear description necessary.	2,000.
172.503	Improper display of ID number on placards	See § 172.334.
172.504(a)	Failure to placard; affixing or displaying wrong placard. (See also §§ 172.502(a), 172.504(a), 172.505, 172.512, 172.516, 174.33, 174.59, 174.69; all applicable sections should be cited, but the penalty should be set at the amount for the violation most directly in point.) (Generally, the car is the unit of violation, and penalties vary with the number of errors, typically at the rate of $1,000 per placard.)	
	—Complete failure to placard	7,500.

49 CFR section	Description	Guideline amount [2]
	—One placard missing (add $1,000 per missing placard up to a total of three; then use the guideline above).	1,000.
	—Complete failure to placard, but only two (2) placards are required (e.g., intermediate bulk containers [IBCs]).	2,500.
172.504(b)	Improper use of DANGEROUS placard for mixed loads.	5,000.
172.504(c)	Placarded for wrong hazard class when no placard was required due to "1,001 pound" exemption.	2,000.
172.504(e)	Use of placard other than as specified in the table:	
	—Improper placard caused or contributed to improper reaction by emergency response forces or caused or contributed to improper handling by carrier that led to a product release.	15,000.
	—Improper placard that could cause improper emergency response or handling by carrier.	5,000.
	—Technical violation	2,500.
172.505	Improper application of placards for subsidiary hazards. (This is in addition to any violation on the primary hazard placards.)	5,000.
172.508(a)	Offering hazardous material for rail transportation without affixing placards. (The preferred section for a total failure to placard is § 172.504(a); only one section should be cited to avoid a dual penalty.) (Note also: Persons offering hazardous material for rail movement must *affix* placards; if offering for highway movement, the placards must be *tendered* to the carrier. § 172.506.)	7,500.
	One placard missing (per car). (Add $1,000 per missing placard up to a total of three; if all placards are missing, the guideline above applies.)	1,000.
	Placards OK, except they were International Maritime Dangerous Goods (IMDG) labels instead of 10″ placards. (Unit of violation is the packaging, usually a portable tank.)	500.
	Placards on Container on Flatcar/Trailer on Flatcar (TOFC/COFC) units not readily visible. (§ 172.516 should be cited).	See § 172.516.
172.508(b)	Accepting hazardous material for rail transportation without placards affixed.	5,000.
172.510(a)	EXPLOSIVES 1.1, EXPLOSIVES 1.2, POISON GAS, (Division 2.3, Hazard Zone A), POISON, (Division 6.1, Packing Group I, Hazard Zone A), or a Division 2.1 material transported in a Class DOT 113 tank car, placards displayed without square background.	5,000.
172.512(a)	Improper placarding of freight containers	Follow § 172.504 guidelines.
172.514	Improper placarding of bulk packaging other than a tank car: For the "exception" packages in 174.514(c). Use the regular placarding sections for the guideline amounts for larger bulk packages.	2,000.
172.516	Placard not readily visible, improperly located or displayed, or deteriorated. Placard is the unit of violation.	1,000.
	—When placards on an intermodal container are not visible, for instance, because the container is in a well car. Container is the unit of violation, and, as a matter of enforcement policy, FRA accepts the lack of visibility of the end placards.	2,000.

49 CFR section	Description	Guideline amount [2]
	—Note that, while placards on freight containers, portable tanks, or TOFC vehicles may be used in lieu of placards on the rail cars, if both are placarded, each must be done properly. Thus, for instance, EXPLOSIVES 1.1 placards on intermodal containers do not require white square backgrounds, but if the rail car carrying such a container is placarded, the white square background is required on the rail car.	
172.519(b)(4)	Improper display of hazard class on placard—primary hazard.	2,500.
	Improper display of hazard class on placard—secondary hazard.	2,500.
Emergency Response Information	Violations of §§ 172.600–.604 are in addition to shipping paper violations. In citing a carrier, if the railroad's practice is to carry an emergency response (E/R) book or to put the E/R information as an attachment to the consist, the unit of violation is generally the train (or the consist). ''Telephone number'' violations are generally best cited against the shipper; if against a railroad, there should be proof that the number was given to the railroad; that is, the number was on the original shipping document. Considerable aggravation of the penalties under these sections is possible.	
172.600–.602	Where improper emergency response information has caused an improper reaction from emergency forces and the improper response has aggravated the situation.	15,000.
	Bad, missing, or improper emergency response information that could cause a significant difference in response.	5,000.
	Bad, missing, or improper emergency response information not likely to cause a significant difference in response.	2,500.
172.602(c)	Failure to have emergency response information ''immediately accessible,'' resulting in delay or confusion in emergency response.	15,000.
	Failure to have emergency response information ''immediately accessible'' with no negative effect on emergency response.	7,500.
172.604	Emergency response telephone number.	
	—Failure to include emergency response telephone number on a shipping paper.	4,000.
	—Listing an unauthorized, incorrect, non-working, or unmonitored (24 hrs. a day) emergency response telephone number on a shipping paper.	4,000.
Training	NOTE: The statutory minimum penalty for training violations is $450.	
172.702(a)	General failure to train hazardous material employees.	7,500.
172.702(b)	Hazardous material employee performing covered function without training. (Unit of violation is the employee.)	1,000.
172.704(a)	—Failure to train in a required area: —General awareness/familiarization; —Function-specific; —Safety; —Security awareness; —In-depth security training. (Unit of violation is the ''area,'' per employee. For a total failure to train, § 172.702(a) applies.)	2,500.
172.704(c)	Initial and recurrent training. (This section should be cited with the relevant substantive section, e.g., § 172.702(a), and use penalty provided there.)	Varies.
172.704(d)	Failure to maintain record of training. (Unit of violation is the employee.)	2,500.
	There is some evidence of training, but no (or inadequate) records and the employee demonstrates no or very little knowledge or skills in doing the job.	4,000.
Security:		

49 CFR section	Description	Guideline amount [2]
172.800	Total failure to develop security plan. Factors to consider are the size of the entity (is it a small business?); the type of hazmat handled; and the quantities of hazmat handled. Aggravation should be considered, for example, if it is a large entity that handles significant quantities of chlorine or other toxic inhalation hazard (TIH) material.	5,000 to 10,000.
	Failure to adhere to the developed security plan—considerable aggravation possible. Factors to consider include size of entity, quantities and types of hazmat handled, number of security plan components not complied with.	1,000 to 10,000.
172.802(a)	Failure to include each required component in plan: —Personnel security; —Unauthorized access; —En route security. (Unit of violation is the "area." For a total failure to have a security plan, cite § 172.800 and use that penalty instead of § 172.802.)	2,000.
172.802(b)	Failure to have security plan (or appropriate portions of it) available to implementing employees. (A failure to have the plan "in writing" is treated as a violation of the requirement to have a plan and cited under § 172.800, using that penalty.)	5,000.
	Failure to revise/update the plan. (The requirement to revise/update is based on "changing circumstances." Specific, clear, and detailed explanations of the circumstances that changed will be necessary.)	5,000.
	Failure to update all copies of the plan to the current level (i.e. all copies should be identical). (As in the tank car quality control area, the requirement to conform copies applies only to the "official" copies of the plan. Uncontrolled (and non-updated) copies of the security plan are not a violation if the uncontrolled copies are clearly marked as such.)	5,000.
PART 173—SHIPPERS—GENERAL REQUIREMENTS FOR SHIPMENTS AND PACKAGES		
General:		
173.1	General duty section applicable to shippers; also includes subparagraph (b), the requirement to train employees about applicable regulations. (Cite the appropriate section in the 172.700–704 series for training violations.).	2,000.
173.9(a)	Early delivery of transport vehicle that has been fumigated. (48 hours must have elapsed since fumigation.).	5,000.
173.9(b)	Failure to display fumigation placard. (Ordinarily cited against shipper only, not against railroad.).	1,000.
173.10	Delivery requirements for gases and for flammable liquids. See also §§ 174.204 and 174.304.	3,000.
Preparation of Hazardous Materials for Transportation:		
173.22	Shipper responsibility: This general duty section should ordinarily be cited only to support a more specific charge.	See specific section.
173.22a	Improper use of packagings authorized under exemption.	2,500.
	Failure to maintain copy of exemption as required.	1,000.

49 CFR section	Description	Guideline amount [2]
173.24(b)(1) and 173.24(b)(2) and 173.24(f)(1) and 173.24(f)(1)(ii).	Securing closures: These subsections are the general ''no leak'' standard for all packagings. § 173.24(b) deals primarily with *packaging* as a whole, while § 173.24(f) focuses on *closures*. Use § 173.31(d) for tank cars, when possible. Cite the sections accordingly, using both the leak/non-leak criteria and the package size considerations to reach the appropriate penalty. Any actual leak will aggravate the guideline by, typically, 50%; a leak with contact with a human being will aggravate by at least 100%, up to the maximum of $50,000, and up to $100,000 if the violation results in death, serious illness or injury or substantial destruction of property. For intermodal (IM) portable tanks and other tanks of that size range, use the tank car penalty amounts, as stated in § 173.31.	
	—Small bottle or box	1,000.
	—55-gallon drum	2,500.
	—Larger container, e.g., IBC; not portable tank or tank car.	5,000.
	—IM portable tank, cite § 173.24(f) and use the penalty amounts for tank cars: Residue, generally, § 173.29(a) and, loaded, § 173.31(d).	
	—Residue adhering to outside of package (i.e., portable tanks, tank cars, etc.).	5,000.
173.24(c)	Use of package not meeting specifications, including required stencils and markings. The most specific section for the package involved should be cited (see below). The penalty guideline should be adjusted for the size of the container. Any actual leak will aggravate the guideline by, typically, 50%; a leak with contact with a human being will aggravate by at least 100%, up to the maximum of $50,000, and up to $100,000 if the violation results in death, serious illness or injury or substantial destruction of property.	
	—Small bottle or box	1,000.
	—55-gallon drum	2,500.
	—Larger container, e.g., IBC; not portable tank or tank car, but this section is applicable to a hopper car.	5,000.
	For more specific sections: Tank cars—§ 173.31(a), portable tanks—§ 173.32, and IM portable tanks—§§ 173.32a,173.32b, and 173.32c.	
173.24a(a)(3)	Non-bulk packagings: Failure to secure and cushion inner packagings.	1,000.
	—Causes leak	5,000.
	—Leak with any contact between product and any human being.	15,000.
173.24a(b) and (d)	Non-bulk packagings: Exceeding filling limits	1,000.
	—Causes leak	5,000.
	—Leak with any contact between product and any human being.	15,000.
173.24b(a)	Insufficient outage:	
	—<1%	3,000.
	—Causes leak	5,000.
	Outage <5% on PIH material	5,000.
	—Causes leak	7,500.
	—Leak with any contact between product and any human being.	15,000.
173.24b(d)(2)	Overloaded to exceed the maximum weight of lading marked on the specification plate.	5,000.
173.26	Loaded beyond gross weight or capacity as stated in specification. (Applies only if quantity limitations do not appear in packaging requirements of part 173.) (For tank cars, see § 179.13.) For gross weight and capacity requirements, see § 179.13. § 173.26 should be the citation for the violation and civil penalty; § 179.13 can be cited as a reference section.	5,000.
173.28	Improper reuse, reconditioning, or remanufacture of packagings.	1,000.
173.29(a)	Offering residue tank car for transportation when openings are not tightly closed (§ 173.31(d) is also applicable for tank cars). The regulation requires offering ''in the same manner as when'' loaded and may be cited when a car not meeting specifications (see § 173.31(a)(1)) is released back into transportation after unloading; same guideline amount. Guidelines vary with the type of commodity involved. In addition to the vapor pressure factor cited below, the RQ (reportable quantity) is a fair measure of the danger of a commodity to the environment. For RQ values ≤ 10, consider aggravating the penalties below by no less than 50 percent.	

49 CFR section	Description	Guideline amount [2]
	—Hazardous material with insignificant vapor pressure and without classification as ''poison'' or ''inhalation hazard.''.	2,000.
	—With actual leak	5,000.
	—With leak allowing the product to contact any human being.	15,000.
	—Hazardous material with vapor pressure (essentially any gas or compressed gas) and/or with classification as ''poison'' or ''inhalation hazard.''.	5,000.
	—With actual leak	7,500.
	—With leak allowing the product (or fumes or vapors) to contact any human being. (In the case of fumes, the ''contact'' must be substantial.).	15,000.
	—Where only violation is failure to secure a protective housing, e.g., the covering for the gaging device.	1,000.
173.30	A general duty section that should be cited with the explicit statement of the duty.	
173.31(a)(1)	Use of a tank car not meeting specifications and the ''Bulk packaging'' authorization in Column 8 of the § 172.101 Hazardous Materials Table reference is:	
	§ 173.240	1,000.
	§ 173.241	2,500.
	§ 173.242	5,000.
	§ 173.243	5,000.
	§ 173.244	7,500.
	§ 173.245	7,500.
	§ 173.247	1,000.
	§ 173.249	7,500.
	§ 173.314	5,000.
	§ 173.315	5,000.
	§ 173.319	5,000.
	§ 173.320	5,000
	§ 173.323	7,500.
	—Minor defect not affecting the ability of the package to contain a hazardous material, e.g., no chain on a bottom outlet closure plug.	500.
	—Defect of greater importance, e.g., safety valve tested, but test date not stenciled on valve.	1,000.
	—Tank meets specification, but specification is not stenciled on car. § 179.1(e) implies that only the builder has the duty here, but it is the presence of the stencil that gives the shipper the right to rely on the builder. (See § 173.22(a)(3).).	1,000.
	—Tank car not stenciled according to Appendix C of the Tank Car Manual. The sub-reference is to § 179.22 which requires each tank car to be marked in accordance with Appendix C of the Tank Car Manual. For example, Appendix 3.03(a)(5), requires marking of the tank ''NOT FOR FLAMMABLE LIQUIDS'' or ''NOT FOR FLAMMABLE OR POISONOUS LIQUIDS.''.	2,500.
173.31(a)(2)	Tank cars and appurtenances used for a material not authorized on the certificate of construction (or by addendum on Association of American Railroads (AAR) form R–1).	7,500.
173.31(a)(3)	Filling a tank car overdue for a periodic inspection with a hazardous material and then offering it for transportation. (Note: Offering a residue car, overdue for inspection, is not a violation; neither is filling the car—so long as it is not offered for transportation.) (Adjust penalty if less than one month or more than one year overdue.).	7,500.
173.31(a)(4)	Use of tank car without air brake support attachments welded to pads..	5,000.
173.31(a)(5)	Use of a tank car with a self-energized manway located below the liquid level of the lading.	15,000.

49 CFR section	Description	Guideline amount [2]
173.31(b)(1)	Use of DOT-specification tank car, or any tank car used for transportation of a hazardous material, without shelf couplers.	10,000.
	—Against a carrier, cite § 174.3 and this section.	6,000.
173.31(b)(2)	Tank car with nonreclosing pressure relief device used to transport Class 2 gases, Class 3 or 4 liquids, or Division 6.1 liquids, PG I or II.	7,500.
	Tank car has a nonreclosing pressure relief device and the wrong pressure is stenciled on the tank. Cite this section where the standard in § 179.22(a) is not met and the respondent is other than the builder or manufacturer.	1,000.
	Where either the rupture disc is unmarked for pressure or manufacturer name or is marked but is of the wrong pressure. Cite this section for a violation of § 179.156(h) against other than the builder or manufacturer.	5,000.
173.31(b)(3)	Use of a tank car for the transportation of a hazardous material without the required tank-head protection. See paragraphs (b)(3)(iii) and (iv) for compliance periods.	
	—Class 2	10,000.
	—Tank car constructed from aluminum or nickel plate.	7,500.
	—Against a carrier, cite § 174.3 and this section	6,000.
173.31(b)(4)	Use of a tank car for the transportation of a Class 2 material without the required thermal protection. See paragraphs (b)(4)(i) for compliance periods.	10,000.
173.31(b)(5)	Use of a tank car for the transportation of a hazardous material without the required bottom-discontinuity protection. See the paragraph for compliance periods.	5,000.
173.31(b)(6)	Failure to submit a progress report to the FRA	2,500.
173.31(c)	Use of a tank car with an incorrect tank test pressure.	10,000.
173.31(d)	Offering a tank car for transportation with a hazardous material, or a residue of a hazardous material, that is not in proper condition or that is unsafe for transportation. Sections 173.24(b) and (f) establish a ''no-leak'' design standard, and 173.31 imposes that standard on operations. In addition to the vapor pressure factor cited below, the RQ (reportable quantity) is a fair measure of the danger of a commodity to the environment. For RQ values ≤ 10, consider aggravating the penalties below by no less than 50 percent. The unit of violation is the car, aggravated if necessary for truly egregious condition.	5,000.
	Loaded car:	
	—Failure to inspect the tank car, service equipment, or markings prior to offering the car for transportation.: If the failure to inspect resulted in a release of product, the appropriate penalty amount below applies.	5,000.
	—With actual leak of product	10,000.
	—With actual leak allowing the product (or fumes or vapors) to contact any human being. (With safety vent, be careful because carrier might be at fault).	15,000.
	—Minor violation, e.g., bottom outlet cap loose on tank car of molten sulfur (because product is a solid when shipped).	1,000.
	Residue car: (The penalties are the same as in 173.29(a).)	

49 CFR section	Description	Guideline amount [2]
	Offering residue tank car for transportation when openings are not tightly closed (§ 173.29(a) is also applicable for tank cars) Guidelines vary with the type of commodity involved:	
	—Hazardous material with insignificant vapor pressure and without classification as ''poison'' or ''inhalation hazard.''.	2,000.
	—With actual leak	5,000.
	—With leak allowing the product to contact any human being.	15,000.
	—Hazardous material with vapor pressure (esentially any gas or compressed gas) and/or with classification as ''poison'' or ''inhalation hazard.''.	5,000.
	—With actual leak	7,500.
	—With leak allowing the product (or fumes or vapors) to contact any human being. (In the case of ''fumes,'' the ''contact'' must be substantial.).	15,000.
	Whether loaded or residue:	
	—Where the only violation is the failure to secure a protective housing, e.g., the covering for the gaging device.	1,000.
	—Where ''other conditions'' than a loose closure make a tank car not ''in proper condition for transportation'' (e.g., loose ladders, seals thrown into safety valves, etc.).	2,500 (Varies to account for seriousness).
173.31(e)(1)	Tank car with interior heating coils used to transport Division 2.3 or Division 6.1, PG I, based on inhalation toxicity.	7,500.
173.31(e)(2)	Use of a tank car for a material poisonous by inhalation that does not meet the minimum specification i.e., 300 pound tank test pressure, head protection, and a metal jacket.) See the paragraph for the compliance dates.	10,000.
173.31(f)	Use of a tank car for a ''listed'' hazardous substance that does not meet the minimum specification (i.e., 200 pound tank test pressure, head protection, and a metal jacket.): See the paragraph for the compliance dates and § 173.31(f)(2) for the list of hazardous substances.	5,000.
173.31(g)(1)	Unloading a tank car without securing access to the track to prevent entry by other rail equipment. Derails, lined and blocked switches, or other equipment that provides equivalent level of security is acceptable.	4,000.
173.31(g)(2)	Unloading a tank car without caution signs properly displayed. (See Part 218, Subpart B).	2,000.
173.31(g)(3)	Unloading without brakes set and/or wheels blocked. (The enforcement standard, as per 1995 Hazardous Materials Technical Resolution Committee, is that sufficient handbrakes must be applied on one or more cars to prevent movement and each car with a handbrake set must be blocked in both directions. The unloading facility must make a determination on how many brakes to set.).	
	—No brakes set, no wheels blocked, or fewer brakes set/wheels blocked than facility's operating plan.	5,000.
	—No brakes set, but wheels blocked	3,000.
	—Brakes set, but wheels not blocked	4,000.
173.32(a)(1)	Using a portable tank for transportation of hazardous materials, when tank does not meet regulatory requirements. (For loose closures or leaks on portable tanks use 173.24.).	5,000.
173.32(a)(2)	Filling and offering portable tank when periodic test or inspection overdue.	5,000.

49 CFR section	Description	Guideline amount [2]
Gases; Preparation and Packaging:		
173.314(c)	Compressed gas loaded in excess of filling density (same basic concept as insufficient outage).	6,000.
173.314(e) through (o)	Failure to comply with a special requirement for a compressed gas.	5,000.
PART 174—CARRIAGE BY RAIL		
General Requirements:		
174.3	Acceptance of improperly prepared shipment. This general duty section shall be accompanied by a citation to the specific section violated.	
174.9	Failure to properly inspect a rail car containing a hazardous material when accepted for transportation or placed in a train: The carrier shall inspect the rail car, at ground level, for required markings, labels, placards, securement of closures and leakage. The inspection may be performed in conjunction with the inspections required under parts 215 and 232. This requirement will not ''trigger'' an inspection and thereby require a train to be stopped. For example, in run-through train operations, the train crew of the receiving railroad simply assumes responsibility for the train from the delivering crew. Acceptance of responsibility includes the right to receive a penalty action for transporting a rail car with a non-complying condition. Note also that the presence of a non-complying condition by itself does not prove that there was a failure to inspect. See also § 174.50 for violations against the carrier for loose (visible from ground level) closures on cars.	For loaded car 5,000. For residue car 2,000.
174.14	Failure to expedite: Violation of ''48-hour rule.''	2,500.
General Operating Requirements	This subpart (Subpart B) of Part 174 has two sections referring to shipment documentation: § 174.24 relating to *accepting* documents, and § 174.26 relating to movement documents in the *possession* of the train crew. Only the most relevant section should be cited. In most cases, the unit of violation is the shipment, although where a unified consist is used to give notice to the crew, there is some justification for making it the train, especially where the discrepancy was generated using automated data processing and the error is repetitious.	
174.24(a)	Accepting hazardous material shipment without properly prepared shipping paper. (The carrier's duty extends only to the document received, that is, a shipment of hazardous material in a non-placarded transport vehicle with a shipping paper showing other than a hazardous material is not a violation against the carrier unless knowledge of the contents of the vehicle is proved. Likewise, receipt of a tank car placarded for Class 3 with a shipping paper indicating a flammable liquid does not create a carrier violation if the car, in fact, contains a corrosive. On the other hand, receipt of a placarded trailer with a shipping paper listing only FAK (''freight-all-kinds''), imposes a duty on the carrier to inquire further and to reject the shipment if it is improperly billed.)	
	—Improper hazardous material information that could cause delay or error in emergency response.	7,500.
	—Total absence of hazardous material information.	5,000.
	—Technical errors, not likely to cause problems, especially with emergency response.	1,000.

49 CFR section	Description	Guideline amount [2]
	—Minor errors not relating to hazardous material emergency response, e.g., not listing an exemption number and the exemption is not one affecting emergency response.	500.
	Failure to include emergency response information is covered at §§ 172.600–.604; while the normal unit of violation for movement documents is the whole document, failure to provide emergency response information is a separate violation.	
174.24(b)	Failure to retain shipping papers for one year. (Variation over a wide range is not unusual, depending upon circumstances.).	7,500.
174.26(a)	Train crew does not have a document indicating position in train of each rail car containing a hazardous material. Routinely aggravate by 50% for Poison Gas, 2.3, and Explosives, 1.1 and 1.2. (Train is the unit of violation—this is generally going to be the consist list for a train.).	6,000.
	Train crew has documents described above but they have not updated the document to account for delivery or pickup of car or cars. Penalty amount may vary depending on the number of cars not listed or out of place, the number of places the cars are off, the type of commodity in the car, and the potential effects on safe handling of the cars or emergency response. (Each failure to update is a separate unit of violation—if the crew picked up one cut of cars and failed to update the document, that would be one unit of violation. The ''update'' requirement only matures when the crew has placed the cars into the train—or removed them from the train—re-laced the air hoses, and are ready to depart.).	2,000 to 4,000.
174.26(b)	Improper paperwork in possession of train crew. (Shipment is unit of violation, although there is justification for making it the train if a unified consist [e.g. one that shows both train car order and hazmat information] is used to carry this information and the violation is a pattern one throughout all, or almost all, of the hazardous material shipments. For intermodal traffic, ''shipment'' can mean the container or trailer—e.g., a UPS trailer with several non-disclosed hazardous material packages would be one unit.)	
	—Information on the document possessed by the train crew is wrong to the extent that it caused or materially contributed to a reaction by emergency responders that aggravated the situation or caused or materially contributed to improper handling by the carrier that led to or materially contributed to a product release.	15,000.
	—Information is present and wrong, but without adverse emergency response effect (e.g. insignificant error in shipping name for the hazmat; name is incorrect but the emergency response would be the same).	3,000.
	—Total lack of hazardous material information on movement document. (Some shipping names alone contain sufficient information to reduce the guideline to the next lower level, but there may be such dangerous products that aggravation needs to be considered.).	7,500.
	—Some information is present but the error(s) could cause mishandling by the carrier or a delay or error in emergency response. Includes missing RESIDUE description required by § 172.203(e)(2).	5,000.
	—Improper information, but the hazardous material are small shipments (e.g., UPS moves) and PG III (e.g., the ''low hazard'' material allowed in TOFC/COFC service without an exemption since HM–197).	3,000.
	—Lack of emergency response phone number ...	4,000.

49 CFR section	Description	Guideline amount [2]
	—Technical defect or minor error not likely to cause delay or error in emergency response or carrier handling.	500–1,000.
174.50	Forwarding a bulk packaging (e.g. a tank car) that no longer conforms to the hazmat regulations without first repairing the defect. This includes such non-conforming conditions as loose closures visible from ground level (e.g. loose bottom outlet caps), improper stenciling or marking.	For loaded car 5,000. For residue car 2,000.
	—Forwarding a leaking, or non-conforming non-bulk package containing a hazardous material without repair or over-packing.	5,000.
	—Forwarding a leaking bulk package beyond the movement ''as necessary to reduce or to eliminate an immediate threat * * *.'' Consider mitigation for low hazard HM (e.g., HOT) and for bulk packages smaller than tank cars.	10,000.
	—Loss of product resulted in human contact because of improper carrier handling.	15,000.
	—Failure to obtain movement approval from the FRA for the transportation of a bulk packaging that no longer conforms to the regulations.	7,500.
	—Failure to follow directives in a movement approval.	5,000.
	—Failure to report corrective actions (or any other reporting requirement in the movement approval).	5,000.
General Handling and Loading Requirements:		
174.55	Failure to block and brace as prescribed. (See also §§ 174.61, 174.63, 174.101, 174.112, 174.115; where these more specific sections apply, cite them.) Note: The regulatory requirement is that hazardous material packages be loaded and securely blocked and braced to prevent the packages from changing position, falling or sliding into each other. If the load is tight and secure, pieces of lumber or other material may not be necessary to achieve the ''tight load'' requirement.	
	—General failure to block and brace	5,000.
	—Inadequate blocking and bracing (an attempt was made but blocking/bracing was insufficient).	2,500.
	—Inadequate blocking and bracing leading to a leak.	7,500.
	—Inadequate blocking and bracing leading to a leak and human being contact.	15,000.
174.59	Other specific placarding and marking sections may also be applicable. Marking and placarding. A railroad's placarding duties are to *not* accept a car without placards [§ 172.508(b)], and to *not* transport a car without placards [§ 174.59]. At each inspection point, a railroad must determine that all placards are in place. [§ 174.9]. The ''next inspection point'' replacement requirement in this section refers to placards that disappear *between* inspection points. A car at an inspection point must be placarded because it is ''in transportation'' [49 U.S.C. 5102(12)], even if held up at that point. Because the statute creates civil penalty liability only if a violation is ''knowing,'' that is, ''a reasonable person knew or should have known that an act performed by him was in violation of the HMR,'' and because railroads are not under a duty to inspect hazardous material cars merely standing in a yard, *violations written for unplacarded cars in yards must include proof that the railroad knew about the unplacarded cars and took no corrective action within a reasonable time.* (Note also that the real problem with unplacarded cars in a railyard may be a lack of emergency response information, §§ 172.600–172.604, and investigation may reveal that those sections should be cited instead of this one.)	
	—Complete failure to placard or to replace missing placards.	7,500.
	—One placard missing (per car). (Add $1,000 per missing placard up to a total of three; then use the guideline above).	1,000.

49 CFR section	Description	Guideline amount [2]
	For other placarding violations, see §§ 172.500–.560 and determine if one of them more correctly states the violation. For marking violations, see §§ 172.300–.338 and determine if one of them more correctly states the violation. Note that marking violations, except for the UN number, are generally applicable to the shipper/offeror.	
174.61	Improper transportation of transport vehicle or freight container on flat car. (If improper lading restraint is the violation, see § 174.55; if improper restraint of a bulk packaging inside a closed transport vehicle is the violation, see § 174.63(b).).	3,000.
174.63(a) and (c)	—Improper transportation of portable tank or other bulk packaging in TOFC/COFC service.	3,000.
	—Portable tank double stacked with container above or below. (§ 174.63(c)(5)(i).).	5,000.
	—Portable tank transported in a well car with its outlet valve facing inward. (§ 174.63(c)(5)(ii).).	3,000.
	—Portable tank transported without securement fittings engaged and locked or void filling devices not properly deployed.	5,000.
	—Improper transportation leading to a release of product.	7,500.
	—Improper transportation leading to a release and human being contact.	15,000.
174.63(b)	Improper securement of bulk packaging inside enclosed transport vehicle or freight container.	
	—General failure to secure	5,000.
	—Inadequate securement (an attempt to secure was made but the means of securement were inadequate).	2,500.
	—Inadequate securement leading to a leak	7,500.
	—Inadequate securement leading to a leak and human being contact.	15,000.
174.63(e)	Transportation of cargo tank or multi-unit tank car tank in TOFC or COFC service without authorization and in the absence of an emergency.	7,500.
174.67(a)(1)	Tank car transloading operations performed by persons not properly instructed (case cannot be based on inference). (Note: for all transloading requirements, there must be clear evidence that the hazmat shipment is continuing in transportation by another mode. For example, shipping papers show another destination than the one where the tank car is being unloaded/transloaded, and the contents of the tank car are being transloaded into a highway tank truck. Otherwise, the tank car unloading requirements contained in section 173.31(g) apply).	5,000.
174.67(a)(2)	Unloading/transloading hazmat without brakes set and/or wheels blocked. (The enforcement standard, as per 1995 Hazardous Materials Technical Resolution Committee, is that sufficient handbrakes must be applied on one or more cars to prevent movement and each car with a handbrake set must be blocked in both directions. The unloading facility must make a determination on how many brakes to set.)	
	—No brakes set, no wheels blocked, or fewer brakes set/wheels blocked than facility's operating plan.	5,000.
	—No brakes set, but wheels blocked	3,000.
	—Brakes set, but wheels not blocked	4,000.
174.67(a)(3)	Unloading/transloading without securing access to the track to prevent entry by other rail equipment. Derails, lined and blocked switches, or other equipment that provides equivalent level of security is acceptable.	4,000.
174.67(a)(4)	Unloading/transloading without caution signs properly displayed. (See Part 218, Subpart B).	2,000.

49 CFR section	Description	Guideline amount [2]
174.67(a)(5)	Failure of transloading facility to maintain written safety procedures (such as those it may already be required to maintain pursuant to the Department of Labor's Occupational Safety and Health Administration requirements in 29 CFR 1910.119 and 1910.120) in a location where they are immediately available to hazmat employees responsible for the transloading operation.	2,500.
174.67(c)(2)	Failure to use non-metallic block to prop manway cover open while unloading through bottom outlet.	
	—Flammable or combustible liquid, or other product with a vapor flash point hazard.	3,000.
	—Material with no vapor flammability hazard	500.
174.67(h)	Insecure unloading connections, resulting in actual leak of product.	10,000.
	Insecure unloading connections, no leak of product.	5,000.
174.67(i)	Unattended/unmonitored unloading. Tank car must be attended by a designated employee or monitored by a signaling system.	5,000.
174.67(j)	Noncompliance with piping requirements	2,000.
174.67(k)	Failure to comply with requirements for leaving tank car unloading connections attached.	
	—Hazardous material with insignificant vapor pressure and without classification as ''poison'' or ''inhalation hazard.'' (One count can be assessed for each element not followed. May also assess per tank car if more than one is involved in violation)..	2,000.
	—With actual leak	5,000.
	—With leak allowing the product to contact any human being.	15,000.
	—Hazardous material with vapor pressure (essentially any gas or compressed gas) and/or with classification as ''poison'' or ''inhalation hazard.''.	5,000.
	—With actual leak	7,500.
	—With leak allowing the product (or fumes or vapors) to contact any human being). Contact with ''fumes'' must be substantial.	15,000.
174.67(l)	Failure to remove connections, tighten all valves with a ''suitable tool'' and tighten all other closures once unloading is complete.	2,000.
174.81	—Failure to obey segregation requirements for materials forbidden to be stored or transported together. (''X'' in the table).	6,000.
	—Failure to obey segregation requirements for materials that must be separated to prevent commingling in the event of a leak. (''O'' in the table).	4,000.
Handling of Placarded Rail Cars, Transport Vehicles and Freight Containers:		
174.83(a)	Improper switching of placarded rail cars	5,000.
174.83(b)	Improper switching of loaded rail car containing Division 1.1/1.2, 2.3 PG I Zone A, or Division 6.1 PG I Zone A, or DOT 113 tank car placarded for 2.1.	8,000.
174.83(c)–(e)	Improper switching of placarded flatcar	5,000.
174.83(f)	Switching Division 1.1/1.2 without a buffer car or placement of Division 1.1/1.2 car under a bridge or alongside a passenger train or platform.	8,000.
174.84	Improper handling of Division 1.1/1.2, 2.3 PG I Zone A, 6.1 PG I Zone A in relation to guard or escort cars.	4,000.

49 CFR section	Description	Guideline amount [2]
174.85	Improper Train Placement (The unit of violation under this section is the car. Where more than one placarded car is involved, *e.g.*, if two (2) placarded cars are too close to the engine, both are violations. Where both have a similar violation, *e.g.,* a Division 1.1 car next to a loaded tank car of a Class 3 material, each car gets the appropriate penalty as listed below)	
	RESIDUE car without at least 1 buffer from engine or occupied caboose.	3,000.
	Placard Group 1—Division 1.1/1.2 materials (Class A explosive) See chart at § 174.85.	
	—Fewer than six (6) cars (where train length permits) from engine or occupied caboose.	8,000.
	—As above but with at least one (1) buffer	7,000.
	—No buffer at all (where train length doesn't permit five (5) cars).	8,000.
	—Next to open top car or car with permanent bulkheads, where lading extends beyond car ends/bulkheads or, if shifted, would be beyond car ends/bulkheads.	7,000.
	—Next to loaded flat car, except closed TOFC/COFC equipment, auto carriers, specially equipped car with tie-down devices.	6,000.
	—Next to operating temperature-control equipment or internal combustion engine in operation.	7,000.
	—Next to placarded car, except one from same placard group or COMBUSTIBLE.	7,000.
	Placard Group 2—Division 1.3/1.4/1.5 (Class B and C explosives); Division 2.1/2.2 (compressed gas, other than Division 2.3, PG 1 Zone A; Class 3 (flammable liquids); Class 4 (flammable solid); Class 5 (oxidizing materials); Class 6 (poisonous liquids), except 6.1 PG 1 Zone A; Class 8 (corrosive materials). See chart at § 174.85.	
	For tank cars:	
	—Fewer than six (6) cars (where train length permits) from engine or occupied caboose.	6,000.
	—As above but with at least one (1) buffer	5,000.
	No buffer at all (where train length doesn't permit five (5)).	6,000.
	—Next to open top car or car with permanent bulkheads, where lading extends beyond car ends/bulkheads or, if shifted, would be beyond car ends/bulkheads.	5,000.
	—Next to loaded flat car, except closed TOFC/COFC equipment, auto carriers, specially equipped car with tie-down devices.	5,000.
	—Next to operating temperature-control equipment or internal combustion engine in operation.	5,000.
	—Next to placarded car, except one from same placard group or COMBUSTIBLE.	5,000.
	For other rail cars:	
	—Next to placarded car, except one from same placard group or COMBUSTIBLE.	5,000.
	Placard Group 3—Divisions 2.3 (PG 1 Zone A; poisonous gases) and 6.1 (PG 1 Zone A; poisonous materials).	
	For tank cars:	
	—Fewer than six (6) cars (where train length permits) from engine or occupied caboose.	8,000.
	—As above but with at least one (1) buffer	7,000.
	No buffer at all (where train length doesn't permit five (5)).	8,000.
	—Next to open top car or car with permanent bulkheads, where lading extends beyond car ends/bulkheads or, if shifted, would be beyond car ends/bulkheads.	7,000.

49 CFR section	Description	Guideline amount [2]
	—Next to loaded flat car, except closed TOFC/COFC equipment, auto carriers, specially equipped car with tie-down devices.	6,000.
	—Next to operating temperature-control equipment or internal combustion engine in operation.	7,000.
	—Next to placarded car, except one from same placard group or COMBUSTIBLE.	7,000.
	For other rail cars:	
	—Next to placarded car, except one from same placard group or COMBUSTIBLE.	5,000.
	Placard Group 4—Class 7 (radioactive) materials	
	For rail cars:	
	—Next to locomotive or occupied caboose	8,000.
	—Next to placarded car, except one from same placard group or COMBUSTIBLE.	5,000.
	—Next to carload of undeveloped film	3,000.
174.86	Exceeding maximum allowable operating speed (15 mph) while transporting molten metals or molten glass.	3,000.
Class 1 (Explosive) Materials:		
174.101(o)(4)	Failure to have proper explosives placards on flatcar carrying trailers/containers placarded for Class 1. (Except for a complete failure to placard, the unit of violation is the placard.)	
	—Complete failure to placard	7,500.
	—One placard missing (add $1,000 per missing placard up to a total of three, then use the guideline above).	1,000.
174.104(b)	Car used to transport Division 1.1 or 1.2 materials does not meet requirements. (Aggravation to be considered, and may be considerable, for multiple failures to meet requirements.).	5,000.
174.104(c)	Failure to inspect and certify car before placing for loading with Division 1.1 or 1.2 materials.	7,500.
174.104(e)	Failure to supervise the loading and securement of a container (of Division 1.1 or 1.2 materials) on a flat car and failure to certify the car. (Unit of violation is the container.).	5,000.
174.104(f)	Failure to retain car certificates at ''forwarding station.''.	1,000.
	Failure to attach car certificates to car. (Unit of violation is the certificate, two (2) are required.)	1,000.
Detailed Requirements for Class 2 (Gases) Materials:		
174.204	Improper tank car delivery of gases (Class 2 materials).	3,000.
Detailed Requirements for Class 3 (Flammable Liquid) Materials:		
174.304	Improper tank car delivery of flammable liquids (Class 3 materials).	3,000.
Detailed Requirements for Division 6.1 (Poisonous) Materials:		
174.600	Improper tank car delivery of materials extremely poisonous by inhalation (Division 2.3 Zone A or 6.1 Zone A materials).	5,000.
PART 178—SPECIFICATIONS FOR PACKAGINGS		
178.2(b)	Package not constructed according to specifications—also cite specific section not complied with.	
	—Bulk packages, including portable tanks	8,000.

49 CFR section	Description	Guideline amount [2]
	—55-gallon drum	2,500.
	—Smaller package	1,000.
	PART 179—SPECIFICATIONS FOR TANK CARS	
179.1(e)	Tank car not constructed according to specifications—also cite section not complied with. (Part 179 violations are against the builder or repairer. Sections in this Part are often cited in conjunction with violations of §§172.330 and 173.31(a) and (b) by shippers. In such cases, the part 179 sections are cited as references, not as separate alleged violations.).	8,000.
179.3	Constructing tank car without securing approval from Tank Car Committee.	10,000.
179.5(a)	Failure to furnish a Certificate of Construction before tank car is placed in service.	7,500.
179.6	Repair procedures not in compliance with Appendix R of the Tank Car Manual.	10,000.
179.7	Section 179.7 requires that each tank car facility have a quality assurance (QA) program that encompasses at least the elements in §179.7(b). A tank car facility is an entity that manufactures, repairs, inspects, tests, qualifies, or maintains a tank car to ensure that the tank car conforms to parts 179 and 180, or alters the certificate of construction of the car. As a rule, a facility ''qualifies'' a tank by ''inspecting'' it and then ''representing'' it as meeting the standard. In addition to the following penalty amounts, the agency may ''recall'' all tanks qualified by the tank car facility during the period the facility failed to comply with the quality assurance requirements. See, for example, §180.509(b)(4).	
	Total failure to have a quality assurance program	15,000.
	Failure to perform activities as a tank car facility other than in accordance with the quality assurance program. See 180.509(l) for applicability to tank car maintenance activities. Note that failures to perform ministerial activities such as updating the pages in a quality assurance manual or calibrating an instrument carry a lesser penalty (e.g. $2,500), unless they are the cause of a release or an injury or death.	10,000.
	The quality assurance program does not contain one or more of the elements in §179.7(b). (The ''element'' is the unit of violation.).	7,500.
	Failure to provide written procedures to its employees.	7,500.
	Use of an employee to perform nondestructive testing on a tank when that employee does not have the qualifications for that type of nondestructive testing.	10,000.
179.11	Use of an employee to perform welding on a tank when that employee does not have the qualifications for that type of welding procedure. Note: also reference §§179.100–9, 179.200–10, 179.220–10, 179.300–9, and 179.400–11 as appropriate.	10,000.
179.13	Tank cars may not be built or converted to exceed 34,500 gallons capacity or 263,000 pounds gross weight on rail. This is the building specification only; for tank cars loaded beyond capacity or gross weight see 173.26.	Varies. See 173.26 for overloaded cars.
179.15	Pressure relief device (e.g. rupture disc) that does not conform to the requirements (loaded car). May also cite 173.31(d).	5,000.
179.201–3(a)	Failure to properly line a rubber-lined tank car	7,500.
179.201–3(b)	Three possible violations under this section: (1) Failure to produce report certifying that tank car and its equipment have been brought into compliance with specification. Must occur prior to lining tank car with rubber or rubber compound. (2) Failure of tank car liner to provide copy of report and certification that tank has been lined in compliance with specs to tank car owner.	5,000.

49 CFR section	Description	Guideline amount [2]
	(3) Failure of tank car owner to retain reports of latest lining application until next re-lining has been accomplished and recorded.	
PART 180—CONTINUING QUALIFICATION AND MAINTENANCE OF PACKAGINGS		
180	Part 180 prescribes the requirements applicable to any person that manufactures, fabricates, marks, maintains, repairs, inspects, or services tank cars to ensure that the tank cars are in proper condition for transportation. In addition to the following penalty amounts, the agency may ''recall'' all tanks qualified by the tank car facility during the period the facility failed to comply with the quality assurance requirements. See, for example, § 180.509(b)(4).	
180.505	This section brings the quality assurance requirements of § 179.7 (car construction) into the tank car maintenance arena. See § 179.7 for penalty guidelines, cite this section and reference the applicable paragraph(s) or subparagraph(s). No dual penalty will apply. (Part 180 applies the construction standards of Part 179 to service life maintenance and requalification of tank cars.)	
Tank car specific provisions:		
180.509(a)	Failure to comply with requirements for inspection and test.	
	—Failure to mark a car passing a periodic inspection and test.	See § 180.515.
	—Failure to prepare written report for inspection and test performed under this section.	See § 180.517.
180.509(b)	Failure to perform inspection and test when at least one of the qualifying conditions has been met.	5,000.
180.509(c)	Failure to perform inspection and test at specified interval.	5,000.
180.509(d)	Failure to properly perform visual inspection	7,500.
180.509(e)	Failure to properly perform structural integrity inspection and test.	10,000.
180.509(f)	Failure to properly perform thickness test	10,000.
180.509(h)	Failure to properly inspect safety systems	7,500.
180.509(i)	Failure to properly perform lining and coating inspection and test.	10,000.
180.509(j)	Failure to properly perform leakage pressure test	7,500.
180.509(l)	Failure to perform inspection and test in accordance with the quality assurance program. (Applies to all non-DOT specification tank cars as of July 1, 2000, but see § 180.509(l)(3) for ''20-year'' cars. See also § 179.7(f).).	10,000.
180.513	Failure to repair the tank according to Appendix R of the AAR Tank Car Manual.	10,000.
	Use of an employee to perform welding on a tank when that employee does not have the qualifications for that type of welding procedure.	10,000.
180.515	Failure to mark the tank as required	7,500.
180.517	Failure to report, record, and retain required documentation.	7,500.
Provisions for tank cars other than single unit tank car tanks:		
180.519(a)	Failure to retest at required interval	Cite 180.519(b)(5).
180.519(b)(1)	Failure to perform hydrostatic pressure/expansion test as required.	7,500.
180.519(b)(2)	Failure to perform interior air pressure test as required.	7,500.
180.519(b)(3)	Failure to test pressure relief valves as required	7,500.
180.519(b)(4)	Failure to remove and inspect frangible discs and fusible plugs.	5,000.
180.519(b)(5)	Failure to retest at required interval	3,000.
180.519(b)(6)	Failure to stamp tank as required	5,000.
180.519(c)	Failure to visually inspect as required	5,000.
	Failure to use competent persons to perform visual inspection.	5,000.

49 CFR section	Description	Guideline amount [2]
180.519(d)	Failure to record and retain documentation. Mitigate/aggravate depending on the extent of the violation.	7,500.

[2] A person who knowingly violates the hazardous materials transportation law, or regulation, special permit, approval, or order issued thereunder, is subject to a civil penalty of at least $250 but not more than $50,000 for each violation, except that the maximum civil penalty for a violation is $100,000 if the violation results in death, serious illness or severe injury to any person, or substantial destruction of property; and a minimum $450 civil penalty applies to a violation related to training. Each day that the violation continues is a separate offense. 49 U.S.C. 5123; 28 U.S.C. 2461, note.

[61 FR 38647, July 25, 1996, as amended at 69 FR 30591, May 28, 2004; 71 FR 77295, Dec. 26, 2006]

APPENDIX C TO PART 209—FRA'S POLICY STATEMENT CONCERNING SMALL ENTITIES

This policy statement required by the Small Business Regulatory Enforcement Fairness Act of 1996 (Pub. L. 104–121) (SBREFA) explains FRA's communication and enforcement policies concerning small entities subject to the federal railroad safety laws. These policies have been developed to take into account the unique concerns and operations of small businesses in the administration of the national railroad safety program, and will continue to evolve to meet the needs of the railroad industry. For purposes of this policy statement, the Regulatory Flexibility Act (5 U.S.C. 601, *et seq.*), and the ''excessive demand'' provisions of the Equal Justice Act (5 U.S.C. 504 (a)(4), and 28 U.S.C. 2412 (d)(1)(D)), Class III railroads, contractors and hazardous materials shippers meeting the economic criteria established for Class III railroads in 49 CFR 1201.1–1, and commuter railroads or small governmental jurisdictions that serve populations of 50,000 or less constitute the class of organizations considered ''small entities'' or ''small businesses.''

FRA understands that small entities in the railroad industry have significantly different characteristics than larger carriers and shippers. FRA believes that these differences necessitate careful consideration in order to ensure that those entities receive appropriate treatment on compliance and enforcement matters, and enhance the safety of railroad operations. Therefore, FRA has developed programs to respond to compliance-related inquiries of small entities, and to ensure proper handling of civil penalty and other enforcement actions against small businesses.

SMALL ENTITY COMMUNICATION POLICY

It is FRA's policy that all agency personnel respond in a timely and comprehensive fashion to the inquiries of small entities concerning rail safety statutes, safety regulations, and interpretations of these statutes and regulations. Also, FRA personnel provide guidance to small entities, as needed, in applying the law to specific facts and situations that arise in the course of railroad operations. These agency communications take many forms, and are tailored to meet the needs of the requesting party.

FRA inspectors provide training on the requirements of all railroad safety statutes and regulations for new and existing small businesses upon request. Also, FRA inspectors often provide impromptu training sessions in the normal course of their inspection duties. FRA believes that this sort of preventive, rather than punitive, communication greatly enhances railroad safety. FRA's Office of Safety and Office of Chief Counsel regularly provide oral and written responses to questions raised by small entities concerning the plain meaning of the railroad safety standards, statutory requirements, and interpretations of the law. As required by the SBREFA, when FRA issues a final rule that has a significant impact on a substantial number of small entities, FRA will also issue a compliance guide for small entities concerning that rule.

It is FRA's policy to maintain frequent and open communications with the national representatives of the primary small entity associations and to consult with these organizations before embarking on new policies that may impact the interests of small businesses. In some regions of the country where the concentration of small entities is particularly high, FRA Regional Administrators have established programs in which all small entities in the region meet with FRA regional specialists on a regular basis to discuss new regulations, persistent safety concerns, emerging technology, and compliance issues. Also, FRA regional offices hold periodic conferences, in which specific blocks of time are set aside to meet with small businesses and hear their concerns.

In addition to these communication practices, FRA has instituted an innovative partnership program that expands the extent to which small entities participate in the development of policy and process. The Railroad Safety Advisory Committee (RSAC) has been established to advise the agency on the development and revision of railroad safety standards. The committee consists of a wide range of industry representatives, including organizations that represent the interests of

small business. The small entity representative groups that sit on the RSAC may appoint members of their choice to participate in the development of new safety standards. This reflects FRA's policy that small business interests must be heard and considered in the development of new standards to ensure that FRA does not impose unnecessary economic burdens on small businesses, and to create more effective standards. Finally, FRA's Web site (*http://www.fra.dot.gov*) makes pertinent agency information available instantly to the public.

FRA's longstanding policy of open communication with small entities is apparent in these practices. FRA will make every effort to develop new and equally responsive communication procedures as is warranted by new developments in the railroad industry.

SMALL ENTITY ENFORCEMENT POLICY

FRA has adopted an enforcement policy that addresses the unique nature of small entities in the imposition of civil penalties and resolution of those assessments. Pursuant to FRA's statutory authority, and as described in Appendix A to 49 CFR part 209, it is FRA's policy to consider a variety of factors in determining whether to take enforcement action against persons, including small entities, who have violated the safety laws and regulations. In addition to the seriousness of the violation and the person's history of compliance, FRA inspectors consider ''such other factors as the immediate circumstances make relevant.'' In the context of violations by small entities, those factors include whether the violations were made in good faith (*e.g.*, based on an honest misunderstanding of the law), and whether the small entity has moved quickly and thoroughly to remedy the violation(s). In general, the presence of both good faith and prompt remedial action militates against taking a civil penalty action, especially if the violations are isolated events. On the other hand, violations involving willful actions and/or posing serious health, safety, or environmental threats should ordinarily result in enforcement actions, regardless of the entity's size.

Once FRA has assessed a civil penalty, it is authorized to adjust or compromise the initial penalty claims based on a wide variety of mitigating factors, unless FRA must terminate the claim for some reason. FRA has the discretion to reduce the penalty as it deems fit, but not below the statutory minimums. The mitigating criteria FRA evaluates are found in the railroad safety statutes and SBREFA: The severity of the safety or health risk presented; the existence of alternative methods of eliminating the safety hazard; the entity's culpability; the entity's compliance history; the entity's ability to pay the assessment; the impacts an assessment might exact on the entity's continued business; and evidence that the entity acted in good faith. FRA staff attorneys regularly invite small entities to present any information related to these factors, and reduce civil penalty assessments based on the value and integrity of the information presented. Staff attorneys conduct conference calls or meet with small entities to discuss pending violations, and explain FRA's view on the merits of any defenses or mitigating factors presented that may have resulted or failed to result in penalty reductions. Among the ''other factors'' FRA considers at this stage is the promptness and thoroughness of the entity's remedial action to correct the violations and prevent a recurrence. Small entities should be sure to address these factors in communications with FRA concerning civil penalty cases. Long-term solutions to compliance problems will be given great weight in FRA's determinations of a final settlement offer.

Finally, under FRA's Safety Assurance and Compliance Program (SACP), FRA identifies systemic safety hazards that continue to occur in a carrier or shipper operation, and in cooperation with the subject business, develops an improvement plan to eliminate those safety concerns. Often, the plan provides small entities with a reasonable time frame in which to make improvements without the threat of civil penalty. If FRA determines that the entity has failed to comply with the improvement plan, however, enforcement action is initiated.

FRA's small entity enforcement policy is flexible and comprehensive. FRA's first priority in its compliance and enforcement activities is public and employee safety. However, FRA is committed to obtaining compliance and enhancing safety with reasoned, fair methods that do not inflict undue hardship on small entities.

[68 FR 24894, May 9, 2003]

PART 210—RAILROAD NOISE EMISSION COMPLIANCE REGULATIONS

Subpart A—General Provisions

Sec.

210.1 Scope of part.
210.3 Applicability.
210.5 Definitions.
210.7 Responsibility for noise defective railroad equipment.
210.9 Movement of a noise defective locomotive, rail car, or consist of a locomotive and rail cars.
210.11 Waivers.
210.13 Penalty.

Subpart B—Inspection and Testing

210.21 Scope of subpart.
210.23 Authorization.
210.25 Measurement criteria and procedures.
210.27 New locomotive certification.
210.29 Operation standards (moving locomotives and rail cars).
210.31 Operation standards (stationary locomotives at 30 meters).
210.33 Operation standards (switcher locomotives, load cell test stands, car coupling operations, and retarders).

APPENDIX A TO PART 210—SUMMARY OF NOISE STANDARDS, 40 CFR PART 201

APPENDIX B TO PART 210—SWITCHER LOCOMOTIVE ENFORCEMENT POLICY

AUTHORITY: Sec. 17, Pub. L. 92–574, 86 Stat. 1234 (42 U.S.C. 4916); sec. 1.49(o) of the regulations of the Office of the Secretary of Transportation, 49 CFR 1.49(o).

SOURCE: 48 FR 56758, Dec. 23, 1983, unless otherwise noted.

Subpart A—General Provisions

§ 210.1 Scope of part.

This part prescribes minimum compliance regulations for enforcement of the Railroad Noise Emission Standards established by the Environmental Protection Agency in 40 CFR part 201.

§ 210.3 Applicability.

(a) Except as provided in paragraph (b) of this section, the provisions of this part apply to the total sound emitted by moving rail cars and locomotives (including the sound produced by refrigeration and air conditioning units that are an integral element of such equipment), active retarders, switcher locomotives, car coupling operations, and load cell test stands, operated by a railroad as defined in 45 U.S.C. 22, under the conditions described in this part and in 40 CFR part 201.

(b) The provisions of this part do not apply to—

(1) Steam locomotives;

(2) Street, suburban, or interurban electric railways unless operated as a part of the general railroad system of transportation;

(3) Sound emitted by warning devices, such as horns, whistles, or bells when operated for the purpose of safety;

(4) Special purpose equipment that may be located on or operated from rail cars;

(5) As prescribed in 40 CFR 201.10, the provisions of 40 CFR 201.11 (a) and (b) and (c) do not apply to gas turbinepowered locomotives or any locomotive type that cannot be connected by any standard method to a load cell; or

(6) Inert retarders.

[48 FR 56758, Dec. 23, 1983, as amended at 54 FR 33228, Aug. 14, 1989]

§ 210.5 Definitions.

(a) *Statutory definitions.* All terms used in this part and defined in the Noise Control Act of 1972 (42 U.S.C. 4901 *et seq.*) have the definition set forth in that Act.

(b) *Definitions in standards.* All terms used in this part and defined in § 201.1 of the Railroad Noise Emission Standards, 40 CFR 201.1, have the definition set forth in that section.

(c) *Additional definitions.* As used in this part—

Administrator means the Federal Railroad Administrator, the Deputy Administrator, or any official of FRA to whom the Administrator has delegated authority to act in the Administrator's stead.

Consist of a locomotive and rail cars means one or more locomotives coupled to a rail car or rail cars.

FRA means the Federal Railroad Administration.

Inert retarder means a device or system for holding a classified cut of cars and preventing it from rolling out the bottom of a railyard.

Inspector means FRA inspectors or FRA specialists.

Noise defective means the condition in which railroad equipment is found to exceed the Railroad Noise Emission Standards, 40 CFR part 201.

Railroad equipment means rail cars, locomotives, active retarders, and load cell test stands.

Standards means the Railroad Noise Emission Standards, 40 CFR part 201. (See appendix A in this part for a listing.)

§ 210.7 Responsibility for noise defective railroad equipment.

Any railroad that uses railroad equipment that is noise defective or engages in a car coupling operating that results in excessive noise according to the criteria established in this part and in the Standards is responsible for compliance with this part. Subject to § 210.9, such railroad shall—

(a) Correct the noise defect;

(b) Remove the noise defective railroad equipment from service; or

(c) Modify the car coupling procedure to bring it within the prescribed noise limits.

§ 210.9 Movement of a noise defective locomotive, rail car, or consist of a locomotive and rail cars.

A locomotive, rail car, or consist of a locomotive and rail cars that is noise defective may be moved no farther than the nearest forward facility where the noise defective conditions can be eliminated only after the locomotive, rail car, or consist of a locomotive and rail cars has been inspected and been determined to be safe to move.

§ 210.11 Waivers.

(a) Any person may petition the Administrator for a waiver of compliance with any requirement in this part. A waiver of compliance with any requirement prescribed in the Standards may not be granted under this provision.

(b) Each petition for a waiver under this section must be filed in the manner and contain information required by 49 CFR part 211.

(c) If the Administrator finds that a waiver of compliance applied for under paragraph (a) of this section is in the public interest and is consistent with railroad noise abatement and safety, the Administrator may grant a waiver subject to any condition he deems necessary. Notice of each waiver granted, including a statement of the reasons therefor, will be published in the FEDERAL REGISTER.

§ 210.13 Penalty.

Any person who operates railroad equipment subject to the Standards in violation of any requirement of this part or of the Standards is liable to penalty as prescribed in section 11 of the Noise Control Act of 1972 (42 U.S.C. 4910), as amended.

Subpart B—Inspection and Testing

§ 210.21 Scope of subpart.

This subpart prescribes the compliance criteria concerning the requirements for inspection and testing of railroad equipment or operations covered by the Standards.

§ 210.23 Authorization.

(a) An inspector is authorized to perform any noise test prescribed in the Standards and in the procedures of this part at any time, at any appropriate location, and without prior notice to the railroad, for the purpose of determining whether railroad equipment is in compliance with the Standards.

(b)(1) An inspector is authorized to request that railroad equipment and appropriate railroad personnel be made available for a passby or stationary noise emission test, as prescribed in the Standards and in the procedures of this part, and to conduct such test, at a reasonable time and location, for the purpose of determining whether the railroad equipment is in compliance with the Standards.

(2) If the railroad has the capability to perform an appropriate noise emission test, as prescribed in the Standards and in the procedures of this part, an inspector is authorized to request that the railroad test railroad equipment. The railroad shall perform the appropriate test as soon as practicable.

(3) The request referred to in this paragraph will be in writing, will state the grounds upon which the inspector has reason to believe that the railroad equipment does not conform to the Standards, and will be presented to an appropriate operating official of the railroad.

(4) Testing or submission for testing is not required if the cause of the noise defect is readily apparent and the inspector verifies that it is corrected by the replacement of defective components or by instituting a normal maintenance or repair procedure.

(c)(1) An inspector is authorized to inspect or examine a locomotive, rail car, or consist of a locomotive and rail

cars operated by a railroad, or to request that the railroad inspect or examine the locomotive, rail car, or consist of a locomotive and rail cars, whenever the inspector has reason to believe that it does not conform to the requirements of the Standards.

(2) An inspector may request that a railroad conduct an inspection or examination of a locomotive, rail car, or consist of a locomotive and rail cars on the basis of an excessive noise emission level measured by a passby test. If, after such inspection or examination, no mechanical condition that would result in a noise defect can be found and the inspector verifies that no such mechanical condition exists, the locomotive, rail car, or consist of a locomotive and rail cars may be continued in service.

(3) The requests referred to in this paragraph will be in writing, will state the grounds upon which the inspector has reason to believe that the locomotive, rail car, or consist of a locomotive and rail cars does not conform to the Standards, and will be presented to an appropriate operating official of the railroad.

(4) The inspection or examination referred to in this paragraph may be conducted only at recognized inspection points or scheduled stopping points.

§ 210.25 Measurement criteria and procedures.

The parameters and procedures for the measurement of the noise emission levels are prescribed in the Standards.

(a) Quantities measured are defined in § 201.21 of the Standards.

(b) Requirements for measurement instrumentation are prescribed in § 201.22 of the Standards. In addition, the following calibration procedures shall be used:

(1)(i) The sound level measurement system including the microphone shall be calibrated and appropriately adjusted at one or more nominal frequencies in the range from 250 through 1000 Hz at the beginning of each series of measurements, at intervals not exceeding 1 (one) hour during continual use, and immediately following a measurement indicating a violation.

(ii) The sound level measurement system shall be checked not less than once each year by its manufacturer, a representative of its manufacturer, or a person of equivalent special competence to verify that its accuracy meets the manufacturer's design criteria.

(2) An acoustical calibrator of the microphone coupler type designed for the sound level measurement system in use shall be used to calibrate the sound level measurement system in accordance with paragraph (b)(1)(i) of this section. The calibration must meet or exceed the accuracy requirements specified in section 5.4.1 of the American National Standard Institute Standards, ''Method for Measurement of Sound Pressure Levels,'' (ANSI S1.13–1971) for field method measurements.

(c) Acoustical environment, weather conditions, and background noise requirements are prescribed in § 201.23 of the Standards. In addition, a measurement tolerance of 2 dB(A) for a given measurement will be allowed to take into account the effects of the factors listed below and the interpretations of these effects by enforcement personnel:

(1) The common practice of reporting field sound level measurements to the nearest whole decibel;

(2) Variations resulting from commercial instrument tolerances;

(3) Variations resulting from the topography of the noise measurement site;

(4) Variations resulting from atmospheric conditions such as wind, ambient temperature, and atmospheric pressure; and

(5) Variations resulting from reflected sound from small objects allowed within the test site.

§ 210.27 New locomotive certification.

(a) A railroad shall not operate a locomotive built after December 31, 1979, unless the locomotive has been certified to be in compliance with the Standards.

(b) The certification prescribed in this section shall be determined for each locomotive model, by either—

(1) Load cell testing in accordance with the criteria prescribed in the Standards; or

(2) Passby testing in accordance with the criteria prescribed in the Standards.

(c) If passby testing is used under paragraph (b)(2) of this section, it shall be conducted with the locomotive operating at maximum rated horsepower output.

(d) Each new locomotive certified under this section shall be identified by a permanent badge or tag attached in the cab of the locomotive near the location of the inspection Form F 6180.49. The badge or tag shall state:

(1) Whether a load cell or passby test was used;

(2) The date and location of the test; and

(3) The A-weighted sound level reading in decibels obtained during the passby test, or the readings obtained at idle throttle setting and maximum throttle setting during a load cell test.

§ 210.29 Operation standards (moving locomotives and rail cars).

The operation standards for the noise emission levels of moving locomotives, rail cars, or consists of locomotives and rail cars are prescribed in the Standards and duplicated in appendix A of this part.

(a) Measurements for compliance shall be made in compliance with the provisions of subpart C of the Standards and the following:

(1) Consists of locomotives containing at least one locomotive unit manufactured prior to December 31, 1979, shall be evaluated for compliance in accordance with § 201.12(a) of the Standards, unless a locomotive within the consist is separated by at least 10 rail car lengths or 500 feet from other locomotives in the consist, in which case such separated locomotives may be evaluated for compliance according to their respective built dates.

(2) Consists of locomotives composed entirely of locomotive units manufactured after December 31, 1979, shall be evaluated for compliance in accordance with § 201.12(b) of the Standards.

(3) If the inspector cannot establish the built dates of all locomotives in a consist of locomotives measured under moving conditions, evaluation for compliance shall be made in accordance with § 201.12(a) of the Standards.

(b) Noise emission standards for rail cars operating under moving conditions are contained in § 201.13 of the Standards and are stated in appendix A of this part. If speed measurement equipment used by the inspector at the time of the measurement is not operating within an accuracy of 5 miles per hour, evaluation for compliance shall be made in accordance with § 201.13(2) of the Standards.

(c) Locomotives and rail cars tested pursuant to the procedures prescribed in this part and in the Standards shall be considered in noncompliance whenever the test measurement, minus the appropriate tolerance (§ 210.25), exceeds the noise emission levels prescribed in appendix A of this part.

§ 210.31 Operation standards (stationary locomotives at 30 meters).

(a) For stationary locomotives at load cells:

(1) Each noise emission test shall begin after the engine of the locomotive has attained the normal cooling water operating temperature as prescribed by the locomotive manufacturer.

(2) Noise emission testing in idle or maximum throttle setting shall start after a 40 second stabilization period in the throttle setting selected for the test.

(3) After the stabilization period as prescribed in paragraph (a)(2) of this section, the A-weighted sound level reading in decibels shall be observed for an additional 30-second period in the throttle setting selected for the test.

(4) The maximum A-weighted sound level reading in decibels that is observed during the 30-second period of time prescribed in paragraph (a)(3) of this section shall be used for test measurement purposes.

(b) The following data determined by any locomotive noise emission test conducted after December 31, 1976, shall be recorded in the ''Remarks'' section on the reverse side of Form F 6180.49:

(1) Location of test;

(2) Type of test;

(3) Date of test; and

(4) The A-weighted sound level reading in decibels obtained during the passby test, or the readings obtained at idle throttle setting and maximum throttle setting during a load cell test.

(c) Any locomotive subject to this part that is found not to be in compliance with the Standards as a result of a passby test shall be subjected to a load cell test or another passby test prior to return to service, except that no such retest shall be required if the cause of the noise defect is readily apparent and is corrected by the replacement of defective components or by a normal maintenance or repair procedure.

(d) The last entry recorded on Form F 6180.49 as required in paragraph (b) of this section shall be transcribed to a new Form FRA F 6180.49 when it is posted in the locomotive cab.

(e) Locomotives tested pursuant to the procedures prescribed in this part and in the Standards shall be considered in noncompliance wherever the test measurement, minus the appropriate tolerance (§ 210.25), exceeds the noise emission levels precribed in appendix A of this part.

§ 210.33 Operation standards (switcher locomotives, load cell test stands, car coupling operations, and retarders).

(a) Measurement on receiving property of the noise emission levels from switcher locomotives, load cell test stands, car coupling operations, and retarders shall be performed in accordance with the requirements of 40 CFR part 201 and § 210.25 of this part.

(b) These sources shall be considered in noncompliance whenever the test measurement, minus the appropriate tolerance (§ 210.25), exceeds the noise emission levels prescribed in appendix A of this part.

APPENDIX A TO PART 210—SUMMARY OF NOISE STANDARDS, 40 CFR PART 201

Paragraph and section	Noise source	Noise standard—A weighted sound level in dB	Noise measure [1]	Measurement location
	All Locomotives Manufactured on or Before 31 December 1979			
201.11(a)	Stationary, Idle Throttle Setting	73	L_{max} (slow)	30 m (100 ft)
201.11(a)	Stationary, All Other Throttle Settings	93	.....do	Do.
201.12(a)	Moving	96	L_{max} (fast)	Do.
	All Locomotives Manufactured After 31 December 1979			
201.11(b)	Stationary, Idle Throttle Setting	70	L_{max} (slow)	Do.
201.11(b)	Stationary, All Other Throttle Settings	87	.....do	Do.
201.12(b)	Moving	90	L_{max} (fast)	Do.
201.11(c) and 201.12(c).	*Additional Requirement for Switcher Locomotives Manufactured on or Before 31 December 1979 Operating in Yards Where Stationary Switcher and other Locomotive Noise Exceeds the Receiving Property Limit of.*	65	L_{90} (fast) [2]	Receiving property
201.11(c)	Stationary, Idle Throttle Setting	70	L_{max} (slow)	30 m (100 ft)
201.11(c)	Stationary, All Other Throttle Settings	87	.....do	Do.
201.12(c)	Moving	90	L_{max} (fast)	Do.
	Rail Cars			
201.13(1)	Moving at Speeds of 45 mph or Less	88	.....do	Do.
201.13(2)	Moving at Speeds Greater than 45 mph	93	.....do	Do.
	Other Yard Equipment and Facilities			
201.14	Retarders	83	$L_{adjavemax}$ (fast)	Receiving property
201.15	Car-Coupling Operations	92	.....do	Do.
201.16	*Locomotive Load Cell Test Stands, Where the Noise from Locomotive Load Cell Operations Exceeds the Receiving Property Limits of.*	65	L_{90} (fast) [2]	Do.
201.16(a)	Primary Standard	78	L_{max} (slow)	30 m (100 ft).

Paragraph and section	Noise source	Noise standard—A weighted sound level in dB	Noise measure [1]	Measurement location
201.16(b)	Secondary Standard if 30-m Measurement Not Feasible.	65	L_{90} (fast)	Receiving property located more than 120 m from Load Cell.

[1] L_{max}=Maximum sound level; L_{90}=Statistical sound level exceeded 90% of the time; $L_{adjavemax}$=Adjusted average maximum sound level.
[2] L_{90} must be validated by determining that L_{10}–L_{99} is less than or equal to 4dB (A).

[48 FR 56758, Dec. 23, 1983; 49 FR 1521, Jan. 12, 1984]

APPENDIX B TO PART 210—SWITCHER LOCOMOTIVE ENFORCEMENT POLICY

The EPA standards require that the noise emissions from all switcher locomotives in a particular facility be less than prescribed levels measured at 30 meters, under all operating modes. This requirement is deemed to be met unless ''receiving property'' noise due to switcher locomotives exceeds 65 dB(A), when measured in accordance with subpart C of 40 CFR part 201. The 65 dB(A) receiving property standard is the ''trigger'' for requiring the 30-meter test of switcher locomotives.

The purpose underlying FRA's enforcement of the noise standards is to reduce the impact of rail operations noise on receiving properties. In some instances, measures other than the 30-meter test approach may more effectively reduce the noise levels at receiving properties; therefore, FRA enforcement efforts will focus on abatement procedures that will achieve a reduction of receiving property noise levels to less than 65 dB(A).

For example, a parked, idling locomotive, even if equipped with exhaust silencing that meets the stationary locomotive standard (30-meter test), may cause the receiving property standard to be exceeded if located on trackage adjacent to the receiving property. In that case, application of the 30-meter test to other switcher locomotives at the facility may not serve to reduce the receiving property noise level. On the other hand, operational changes by the railroad could significantly reduce receiving property noise levels. In such case, FRA would consider retesting after abatement measures have been taken. If the receiving property noise level is below the trigger and the abatement action is adopted, FRA would not make a 30-meter test of the switcher locomotives at the facility.

PART 211—RULES OF PRACTICE

Subpart A—General

Sec.
211.1 General.
211.3 Participation by interested persons.
211.5 Regulatory docket.
211.7 Filing requirements.
211.9 Content of rulemaking and waiver petitions.

Subpart B—Rulemaking Procedures

211.11 Processing of petitions for rulemaking.
211.13 Initiation and completion of rulemaking proceedings.
211.15 Notice and participation.
211.17 Publication and contents of notices.
211.19 Petitions for extensions of time to comment.
211.21 Consideration of comments received.
211.23 Additional public proceedings.
211.25 Hearings.
211.27 Publication of adopted rules and withdrawal of notices.
211.29 Petitions for reconsideration of a final rule.
211.31 Proceedings on petitions for reconsideration of a final rule.
211.33 Direct final rulemaking procedures.

Subpart C—Waivers

211.41 Processing of petitions for waiver of safety rules.
211.43 Processing of other waiver petitions.
211.45 Petitions for emergency waiver of safety rules.

Subpart D—Emergency Orders

211.47 Review procedures.

Subpart E—Miscellaneous Safety-Related Proceedings and Inquiries

211.51 Tests.
211.53 Signal applications.
211.55 Special approvals.

211.57 Petitions for reconsideration.
211.59 Proceedings on petitions for reconsideration.
211.61 Informal safety inquiries.

Subpart F—Interim Procedures for the Review of Emergency Orders

211.71 General.
211.73 Presiding officer; powers.
211.75 Evidence.
211.77 Appeal to the Administrator.

APPENDIX A TO PART 211—STATEMENT OF AGENCY POLICY CONCERNING WAIVERS RELATED TO SHARED USE OF TRACKAGE OR RIGHTS-OF-WAY BY LIGHT RAIL AND CONVENTIONAL OPERATIONS

AUTHORITY: 49 U.S.C. 20103, 20107, 20114, 20306, 20502–20504, and 49 CFR 1.49.

SOURCE: 41 FR 54181, Dec. 13, 1976, unless otherwise noted.

Subpart A—General

§ 211.1 General.

(a) This part prescribes rules of practice that apply to rulemaking and waiver proceedings, review of emergency orders issued under 45 U.S.C. 432, and miscellaneous safety-related proceedings and informal safety inquiries. The specific time limits for disposition of proceedings apply only to proceedings initiated after December 31, 1976, under the Federal Railroad Safety Act of 1970 (45 U.S.C. 421 *et seq.*). When warranted, FRA will extend these time limits in individual proceedings. However, each proceeding under the Federal Railroad Safety Act shall be disposed of within 12 months after the date it is initiated. A proceeding shall be deemed to be initiated and the time period for its disposition shall begin on the date a petition or application that complies with the requirements of this chapter is received by the person designated in § 211.7.

(b) As used in this part—

(1) *Administrator* means the Federal Railroad Administrator or the Deputy Administrator or the delegate of either of them.

(2) *Waiver* includes exemption.

(3) *Safety Act* means the Federal Railroad Safety Act of 1970, as amended (45 U.S.C. 421 *et seq.*).

(4) *Docket Clerk* means the Docket Clerk, Office of Chief Counsel, Federal Railroad Administration, 1120 Vermont Avenue, N.W., Mail Stop 10, Washington, D.C. 20590 or the Docket Clerk, Department of Transportation Central Docket Management System, Nassif Building, Room Pl-401, 400 Seventh Street, S.W., Washington, D.C. 20590–0001.

(5) *Railroad Safety Board* means the Railroad Safety Board, Office of Safety, Federal Railroad Administration, Washington, DC 20590.

(c) Records relating to proceedings and inquiries subject to this part are available for inspection as provided in part 7 of this title.

[41 FR 54181, Dec. 13, 1976, as amended at 64 FR 70195, Dec. 16, 1999]

§ 211.3 Participation by interested persons.

Any person may participate in proceedings and inquiries subject to this part by submitting written information or views. The Administrator may also permit any person to participate in additional proceedings, such as informal appearances, conferences, or hearings at which a transcript or minutes are kept, to assure informed administrative action and protect the public interest.

§ 211.5 Regulatory docket.

(a)(1) Records of the Federal Railroad Administration created after November 1, 1998, concerning each proceeding subject to this part are maintained in current docket form by the DOT Docket Management System. These records include rulemaking and waiver petitions, emergency orders, notices, comments received in response to notices, hearing transcripts, final rules, denials of rulemaking petitions, grants and denial of waiver and other petitions. Also included are records pertaining to applications for special approval under § 211.55 and § 238.21 of this chapter, petitions for grandfathering approval under § 238.203 of this chapter, signal applications under parts 235 and 236 of this chapter, and informal safety inquiries under § 211.61.

(2) Any person may examine docketed material created after November 1, 1998:

(i) At the DOT Docket Management System, room Pl-401 (plaza level), 400 Seventh Street, S.W. Washington, D.C.

20590. Copies of docketed materials may be obtained upon payment of the fees prescribed by the Docket Management System, or

(ii) Through the Internet at *http://dms.dot.gov*. All docketed materials are available for viewing and may be downloaded for electronic storage or printing. There is no charge for this service.

(b) Records of the Federal Railroad Administration created before November 1, 1998, concerning each proceeding subject to this part are available in FRA's Docket Office, seventh floor, 1120 Vermont Avenue, Washington, DC 20590. Any person may examine docketed material at that location during normal business hours. Copies of docketed material may be obtained upon payment of the fees prescribed in part 7 of this title.

(c) Any person may examine docketed material in the office where it is maintained. Copies of docketed material other than commercially prepared transcripts may be obtained upon payment of the fees prescribed in part 7 of this title.

[41 FR 54181, Dec. 13, 1976, as amended at 64 FR 70195, Dec. 16, 1999]

§211.7 Filing requirements.

(a) Any person may petition the Administrator for issuance, amendment, repeal or permanent or temporary waiver of any rule or regulation. A petition for waiver must be submitted at least 3 months before the proposed effective date, unless good cause is shown for not doing so.

(b)(1) All petitions and applications subject to this part, including applications for special approval under §211.55 and §238.21 of this chapter, petitions for grandfathering approval under §238.203 of this chapter, and signal applications under parts 235 and 236 of this chapter, shall be submitted in triplicate to the FRA Docket Clerk. Each petition received shall be acknowledged in writing. The acknowledgment shall contain the docket number assigned to the petition or application and state the date the petition or application was received. Within 60 days following receipt, FRA will advise the petitioner or applicant of any deficiencies in its petition or application.

(2) All comments submitted in response to a notice and other material pertaining to proceedings subject to this part, including comments submitted in response to requests for special approval under §211.55 and §238.21 of this chapter, petitions for grandfathering approval under §238.203 of this chapter, and signal applications under parts 235 and 236 of this chapter, shall be submitted to the DOT Central Docket Management System and shall contain the assigned docket number for that proceeding. The form of such submissions may be in written or electronic form consistent with the standards and requirements established by the Central Docket Management System and posted on its web site at *http://dms.dot.gov*.

[64 FR 70195, Dec. 16, 1999]

§211.9 Content of rulemaking and waiver petitions.

Each petition for rulemaking or waiver must:

(a) Set forth the text or substance of the rule, regulation, standard or amendment proposed, or specify the rule, regulation or standard that the petitioner seeks to have repealed or waived, as the case may be;

(b) Explain the interest of the petitioner, and the need for the action requested; in the case of a petition for waiver, explain the nature and extent of the relief sought, and identify and describe the persons, equipment, installations and locations to be covered by the waiver;

(c) Contain sufficient information to support the action sought including an evaluation of anticipated impacts of the action sought; each evaluation shall include an estimate of resulting costs to the private sector, to consumers, and to Federal, State and local governments as well as an evaluation of resulting benefits, quantified to the extent practicable. Each petition pertaining to safety regulations must also contain relevant safety data.

Subpart B—Rulemaking Procedures

§ 211.11 Processing of petitions for rulemaking.

(a) *General.* Each petition for rulemaking filed as prescribed in §§ 211.7 and 211.9 is referred to the head of the office responsible for the subject matter of the petition to review and recommend appropriate action to the Administrator. No public hearing or oral argument is held before the Administrator decides whether the petition should be granted. However, a notice may be published in the FEDERAL REGISTER inviting written comments concerning the petition. Each petition shall be granted or denied not later than six months after its receipt by the Docket Clerk.

(b) *Grants.* If the Administrator determines that a rulemaking petition complies with the requirements of § 211.9 and that rulemaking is justified, he initiates a rulemaking proceeding by publishing an advance notice or notice of proposed rulemaking in the FEDERAL REGISTER.

(c) *Denials.* If the Administrator determines that a rulemaking petition does not comply with the requirements of § 211.9 or that rulemaking is not justified, he denies the petition. If the petition pertains to railroad safety, the Administrator may also initiate an informal safety inquiry under § 211.61.

(d) *Notification; closing of docket.* Whenever the Administrator grants or denies a rulemaking petition, a notice of the grant or denial is mailed to the petitioner. If the petition is denied, the proceeding is terminated and the docket for that petition is closed.

§ 211.13 Initiation and completion of rulemaking proceedings.

The Administrator initiates all rulemaking proceedings on his own motion by publishing an advance notice of proposed rulemaking or a notice of proposed rulemaking in the FEDERAL REGISTER. However, he may consider the recommendations of interested persons or other agencies of the United States. A separate docket is established and maintained for each rulemaking proceeding. Each rulemaking proceeding shall be completed not later than 12 months after the initial notice in that proceeding is published in the FEDERAL REGISTER. However, if it was initiated as the result of the granting of a rulemaking petition, the rulemaking proceeding shall be completed not later than 12 months after the petition was filed as prescribed in §§ 211.7 and 211.9.

§ 211.15 Notice and participation.

(a) Except as provided in paragraph (c) of this section, or when the Administrator finds for good cause that notice is impractical, unnecessary, or contrary to the public interest (and incorporates the findings and a brief statement of the reasons therefore in the rules issued), an advance notice or notice of proposed rulemaking is published in the FEDERAL REGISTER and interested persons are invited to participate in the rulemaking proceedings with respect to each substantive rule.

(b) Unless the Administrator determines that notice and public rulemaking proceedings are necessary or desirable, interpretive rules, general statements of policy, and rules relating to organization, procedure, or practice, including those relating to agency management or personnel, are prescribed as final without notice or other public rulemaking proceedings.

(c) An advance notice or notice of proposed rulemaking is issued and interested persons are invited to participate in rulemaking proceedings with respect only to those procedural and substantive rules of general applicability relating to public property, loans, grants, benefits, or contracts which the Administrator has determined to be of substantial public interest.

§ 211.17 Publication and contents of notices.

Each advance notice or notice of proposed rulemaking is published in the FEDERAL REGISTER and includes—

(a) A statement of the time, place and nature of the proposed rulemaking proceeding;

(b) A reference to the authority under which it is issued;

(c) A description of the subjects or issues involved or the substance or terms of the proposed rule;

(d) A statement of the time within which written comments must be submitted and the required number of copies; and

(e) A statement of how and to what extent interested persons may participate in the proceeding.

§ 211.19 Petitions for extensions of time to comment.

(a) Any person may petition the Administrator for an extension of time to submit comments in response to an advance notice or notice of proposed rulemaking. The petition must be received by the FRA Docket Clerk not later than 10 days before expiration of the time stated in the notice and must contain reference to the FRA docket number for the proceeding involved. The filing of the petition does not automatically extend the time for petitioner's comments.

(b) The Administrator grants the petition only if the petitioner shows a substantive interest in the proposed rule and good cause for the extension, and if time permits and the extension is in the public interest. Extensions will not be granted unless time permits and will not exceed one month. If an extension is granted, it is granted as to all persons and a notice of the extension is published in the FEDERAL REGISTER.

[41 FR 54181, Dec. 13, 1976, as amended at 64 FR 70195, Dec. 16, 1999]

§ 211.21 Consideration of comments received.

All timely comments are considered before final action is taken on a rulemaking proposal. Late-filed comments will be considered so far as possible without incurring additional expense or delay.

§ 211.23 Additional public proceedings.

The Administrator may conduct other public proceedings that he finds necessary or desirable. For example, he may invite interested persons to present oral arguments, participate in conferences, or appear at informal hearings.

§ 211.25 Hearings.

(a) A hearing will be held if required by statute or the Administrator finds it necessary or desirable.

(b) Except for statutory hearings required to be on the record—

(1) Hearings are fact-finding proceedings, and there are no formal pleadings or adverse parties;

(2) Any rule issued in a proceeding in which a hearing is held is not based exclusively on the record of the hearing; and

(3) Hearings are conducted in accordance with section 553 of title 5, U.S.C.; section 556 and 557 of title 5 do not apply to hearings held under this part.

(c) The Administrator conducts or designates a representative to conduct any hearing held under this part. The Chief Counsel serves or designates a member of his staff to serve as legal officer at the hearing.

§ 211.27 Publication of adopted rules and withdrawal of notices.

Whenever the Administrator adopts a final rule or withdraws an advance notice or notice of proposed rulemaking, the final rule or a notice of withdrawal is published in the FEDERAL REGISTER.

§ 211.29 Petitions for reconsideration of a final rule.

(a) Any person may petition the Administrator for reconsideration of any rule issued under this part. Except for good cause shown, such a petition must be submitted not later than 60 days after publication of the rule in the FEDERAL REGISTER, or 10 days prior to the effective date of the rule, whichever is the earlier. The petition must contain a brief statement of the complaint and an explanation as to why compliance with the rule is not possible, is not practicable, is unreasonable, or is not in the public interest.

(b) If the petitioner requests consideration of additional facts, he must state the reason they were not presented to the Administrator within the allotted time.

(c) The Administrator does not consider repetitious petitions.

(d) Unless the Administrator specifically provides otherwise, and publishes notice thereof in the FEDERAL REGISTER, the filing of a petition under

this section does not stay the effectiveness of a rule.

[41 FR 54181, Dec. 13, 1976, as amended at 42 FR 27593, May 31, 1977]

§ 211.31 Proceedings on petitions for reconsideration of a final rule.

(a) The Administrator may grant or deny, in whole or in part, any petition for reconsideration of a final rule without further proceedings. Each petition shall be decided not later than 4 months after its receipt by the Docket Clerk. In the event he determines to reconsider a rule, the Administrator may amend the rule or initiate a new rulemaking proceeding. An appropriate notice is published in the FEDERAL REGISTER.

(b) Whenever the Administrator determines that a petition should be granted or denied, a notice of the grant or denial of a petition for reconsideration is sent to the petitioner. When a petition is granted, a notice is published in the FEDERAL REGISTER.

(c) The Administrator may consolidate petitions relating to the same rule.

§ 211.33 Direct final rulemaking procedures.

(a) Rules that the Administrator judges to be noncontroversial and unlikely to result in adverse public comment may be published in the final rule section of the FEDERAL REGISTER as direct final rules. These include noncontroversial rules that:

(1) Affect internal procedures of the Federal Railroad Administration, such as filing requirements and rules governing inspection and copying of documents,

(2) Are nonsubstantive clarifications or corrections to existing rules,

(3) Update existing forms, and

(4) Make minor changes in the substantive rules regarding statistics and reporting requirements.

(b) The FEDERAL REGISTER document will state that any adverse comment or notice of intent to submit adverse comment must be received in writing by the Federal Railroad Administration within the specified time after the date of publication and that, if no written adverse comment or request for oral hearing (if such opportunity is required by statute) is received, the rule will become effective a specified number of days after the date of publication.

(c) If no adverse comment or request for oral hearing is received by the Federal Railroad Administration within the specified time of publication in the FEDERAL REGISTER, the Federal Railroad Administration will publish a notice in the FEDERAL REGISTER indicating that no adverse comment was received and confirming that the rule will become effective on the date that was indicated in the direct final rule.

(d) If the Federal Railroad Administration receives any written adverse comment or request for oral hearing within the specified time of publication in the FEDERAL REGISTER, a notice withdrawing the direct final rule will be published in the final rule section of the FEDERAL REGISTER and, if the Federal Railroad Administration decides a rulemaking is warranted, a notice of proposed rulemaking will be published in the proposed rule section of the FEDERAL REGISTER.

(e) An ''adverse'' comment for the purpose of this subpart means any comment that the Federal Railroad Administration determines is critical of the rule, suggests that the rule should not be adopted, or suggests a change that should be made in the rule.

[72 FR 10087, Mar. 7, 2007]

Subpart C—Waivers

§ 211.41 Processing of petitions for waiver of safety rules.

(a) *General.* Each petition for a permanent or temporary waiver of a safety rule, regulation or standard filed as prescribed in §§ 211.7 and 211.9, is referred to the Railroad Safety Board for decision and decided not later than 9 months after receipt.

(b) *Notice and hearing.* If required by statute or the Administrator or the Railroad Safety Board deems it desirable, a notice is published in the FEDERAL REGISTER, an opportunity for public comment is provided, and a hearing is held in accordance with § 211.25, before the petition is granted or denied.

(c) *Grants.* If the Railroad Safety Board determines that the petition complies with the requirements of § 211.9 and that a waiver is justified, it

grants the petition. Conditions may be imposed on the grant of waiver if the Board concludes they are necessary to assure safety or are in the public interest.

(d) *Denials.* If the Railroad Safety Board determines that the petition does not comply with the requirements of § 211.9 or that a waiver is not justified, it denies the petition.

(e) *Notification.* Whenever the Railroad Safety Board grants or denies a petition, a notice of that grant or denial is sent to the petitioner. When a petition has been decided, interested persons are also notified or a notice is published in the FEDERAL REGISTER.

(f) *Petition for reconsideration.* Any person may petition for reconsideration of the grant or denial of a waiver under procedures set forth in § 211.57. Each petition shall be processed in accordance with § 211.59.

§ 211.43 Processing of other waiver petitions.

(a) *General.* Except as provided in § 211.41, each petition for a permanent or temporary waiver of a rule, regulation or standard shall be filed and processed as prescribed in §§ 211.7 and 211.9.

(b) *Notice and hearing.* If required by statute or the Administrator deems it desirable, a notice is published in the FEDERAL REGISTER, an opportunity for public comment is provided, and a hearing is held in accordance with § 211.25, before the petition is granted or denied.

(c) *Grants.* If the Administrator determines that the petition complies with the requirements of § 211.9 and that a waiver is justified, he grants the waiver. Conditions may be imposed on the grant of waiver if the Administrator concludes they are necessary to achieve the purposes of programs affected by the grant of waiver or are otherwise in the public interest.

(d) *Denials.* If the Administrator determines that the petition does not comply with the requirements of § 211.9 or that a waiver is not justified, he denies the waiver.

(e) *Notification.* Whenever the Administrator grants or denies a petition, a notice of the grant or denial is sent to the petitioner. When a petition has been decided, interested persons are also notified or a notice is published in the FEDERAL REGISTER.

(f) *Petitions for reconsideration.* Any person may petition for reconsideration of the grant or denial of a waiver under procedures set forth in § 211.57. Each petition shall be processed in accordance with § 211.59.

§ 211.45 Petitions for emergency waiver of safety rules.

(a) *General.* This section applies only to petitions for waiver of a safety rule, regulation, or standard that FRA determines are directly related to the occurrence of, or imminent threat of, an emergency event. For purposes of this section an emergency event could be local, regional, or national in scope and includes a natural or manmade disaster, such as a hurricane, flood, earthquake, mudslide, forest fire, significant snowstorm, terrorist act, biological outbreak, release of a dangerous radiological, chemical, or biological material, war-related activity, or other similar event.

(b) *Emergency Relief Docket.* Each calendar year FRA creates an Emergency Relief Docket (ERD) in the publicly accessible DOT Document Management System (DMS). The DMS can be accessed 24 hours a day, seven days a week, via the Internet at the docket facility's Web site at *http://dms.dot.gov*. All documents in the DMS are available for inspection and copying on the Web site or are available for examination at the DOT Docket Management Facility, Room PL–401 (Plaza Level), 400 7th Street, SW., Washington, DC 20590 during regular business hours (9 a.m.–5 p.m.). By January 31st of each year, FRA publishes a notice in the FEDERAL REGISTER identifying by docket number the ERD for that year. A notice will also be published in the previous year's ERD identifying the new docket number.

(c) *Determining the existence of an emergency event.* If the Administrator determines that an emergency event identified in paragraph (a) of this section has occurred, or that an imminent threat of it occurring exists, and determines that public safety or recovery efforts require that the provisions of this

section be implemented, the Administrator will activate the Emergency Relief Docket identified in paragraph (d) of this section. In determining whether an emergency exists, the Administrator may consider declarations of emergency made by local, State, or Federal officials, and determinations by the Federal government that a credible threat of a terrorist attack exists.

(d) *Additional notification.* When possible, FRA will post the FRA Administrator's determination described in paragraph (b)(1) of this section on its website at *http://www.fra.dot.gov*. FRA will also publish a notice in the FEDERAL REGISTER alerting interested parties of the FRA Administrator's determination as soon as practicable.

(e) *Content of petitions for emergency waivers.* Petitions submitted to FRA pursuant to this section should specifically address how the petition is related to the emergency, and to the extent practicable, contain the information required under § 211.9(a) and (b). The petition should at a minimum describe the following: how the petitioner or public is affected by the emergency (including the impact on railroad operations); what FRA regulations are implicated by the emergency (*e.g.* movement of defective equipment); how waiver of the implicated regulations would benefit petitioner during the emergency; and how long the petitioner expects to be affected by the emergency.

(f) *Filing requirements.* Petitions filed under this section, shall be submitted using any of the following methods:

(1) Direct e-mail to FRA at: *RRS.Correspondence@fra.dot.gov;*

(2) Direct fax to FRA at: 202–493–6309; or

(3) To FRA Docket Clerk, Office of Chief Counsel, RCC–10, Mail Stop 10, 1120 Vermont Avenue, NW., Washington, DC 20590, fax no. (202) 493–6068.

(g) *FRA Handling and Initial Review.* Upon receipt and initial review of a petition for waiver, to verify that it meets the criteria for use of these emergency procedures, FRA will add the petition to the ERD. The DMS numbers each document that is added to a docket. (For example, the first document submitted to the docket in 2006 will be identified as FRA–2006–XXX–1.) Thus, each petition submitted to the ERD will have a unique document number which should be identified on all communications related to petitions contained in this docket. If FRA determines that the petition does not meet the criteria for use of these emergency procedures, FRA will notify the petitioner and will process the petition under normal waiver procedures of this subpart.

(h) *Comments.* Comments should be submitted within 72 hours from the close of business on the day that the petition is entered into and available on the DMS. Any comment received after that period will be considered to the extent practicable. All comments should identify the appropriate ERD and should identify the specific document number of the petition designated by the DMS in the ERD. Interested parties commenting on a petition under this section should also include in their comments to the ERD telephone numbers at which their representatives may be reached. Interested parties may submit their comments using any of the following methods:

(1) Direct e-mail to FRA at: *RRS.Correspondence@fra.dot.gov*.

(2) Direct fax to FRA at: 202–493–6309.

(3) Submission of comments to the Docket Clerk, DOT Docket Management Facility, Room PL–401 (Plaza Level), 400 7th Street, SW., Washington, DC 20590 or electronically via the internet at *http://dms.dot.gov*. Any comments or information sent directly to FRA will be immediately provided to the DOT DMS for inclusion in the ERD.

(i) *Request for hearing.* Parties desiring a public hearing on any petition being processed under this section must notify FRA through the comment process identified in paragraph (h) of this section within 72 hours from the close of business on the day that the petition is entered into and available on the DMS. In response to a request for a public hearing, FRA will arrange a telephone conference between all interested parties to provide an opportunity for oral comment. The conference will be arranged as soon as practicable. After such conference, if a party stills desires a public hearing on

the petition, then a public hearing will be arranged as soon as practicable pursuant to the provisions contained in 49 CFR part 211.

(j) *Decisions.* FRA may grant a petition for waiver prior to conducting a public hearing if such action is in the public interest and consistent with safety or in situations where a hearing request is received subsequent to the 72-hour comment period. In such an instance, FRA will notify the party requesting the public hearing of its decision and will arrange to conduct such hearing as soon as practicable.

(1) FRA reserves the right to reopen any docket and reconsider any decision made pursuant to these emergency procedures based upon its own initiative or based upon information or comments received subsequent to the 72-hour comment period or at a later scheduled public hearing.

(2) FRA decision letters, either granting or denying a petition, will be posted in the appropriate ERD and will reference the document number of the petition to which it relates.

(3) Relief granted shall not extend for more than nine months.

(4) For matters that may significantly impact the missions of the Department of Homeland Security, FRA consults with the Department of Homeland Security as soon as practicable.

[72 FR 17438, Apr. 9, 2007]

Subpart D—Emergency Orders

§211.47 Review procedures.

(a) As specified in section 203, Public Law 91–458, 84 Stat. 972 (45 U.S.C. 432), opportunity for review of Emergency orders issued under that section will be provided in accordance with section 554 of title 5 of the U.S.C. Petitions for such review must be submitted in writing to the Office of Chief Counsel, Federal Railroad Administration, Washington, DC 20590. Upon receipt of a petition, FRA will immediately contact the petitioner and make the necessary arrangements for a conference to be held at the earliest date acceptable to the petitioner. At this conference, the petitioner will be afforded an opportunity to submit facts, arguments and proposals for modification or withdrawal of the Emergency order. If the controversy is not resolved at the conference and a hearing is desired, the petitioner must submit a written request for a hearing within 15 days after the conference. The hearing will commence within 14 calendar days f receipt of the request and will be conducted in accordance with sections 556 and 575, title 5, U.S.C. Each petition for review shall be decided not later than 3 months after receipt.

(b) Unless stayed or modified by the Administrator, the requirements of each Emergency order shall remain in effect and be observed pending decision on a petition for review.

Subpart E—Miscellaneous Safety-Related Proceedings and Inquiries

§211.51 Tests.

(a) Pursuant to the Department of Transportation Act (80 Stat. 931, 49 U.S.C. 1651 *et seq.*), the Federal Railroad Safety Act of 1970 (84 Stat. 971, 45 U.S.C. 421, 431–441), or both, the Administrator may temporarily suspend compliance with a substantive rule of the Federal Railroad Administration, if:

(1) The suspension is necessary to the conduct of a Federal Railroad Administration approved test program designed to evaluate the effectiveness of new technology or operational approaches or instituted in furtherance of a present or proposed rulemaking proceeding;

(2) The suspension is limited in scope and application to such relief as may be necessary to facilitate the conduct of the test program; and

(3) The suspension is conditioned on the observance of standards sufficient to assure safety.

(b) When required by statute, a notice is published in the FEDERAL REGISTER, an opportunity is provided for public comment, and a hearing is held in accordance with §211.25, before the FRA approved test program is implemented.

(c) When the Administrator approves suspension of compliance with any rule in connection with a test program, a

description of the test program containing an explanatory statement responsive to paragraph (a) of this section is published in the FEDERAL REGISTER.

§ 211.53 Signal applications.

Applications for approval of discontinuance or material modification of a signal system authorized by part 235 or waiver of a requirement of part 236 of this chapter must be submitted in triplicate to the Secretary, Railroad Safety Board, handled in accordance with procedures set forth in part 235 or 236, respectively, and decided not later than 9 months after receipt. When a decision is issued, the applicant and other interested parties are notified or a notice is published in the FEDERAL REGISTER.

§ 211.55 Special approvals.

Requests for special approval pertaining to safety not otherwise provided for in this chapter, must be submitted in triplicate to the Secretary, Railroad Safety Board; specifying the action requested. These requests shall be considered by the Board and appropriate action shall be taken not later than 9 months after receipt. When a decision is issued, the requestor and other interested parties are notified or a notice is published in the FEDERAL REGISTER.

§ 211.57 Petitions for reconsideration.

(a) Any person may petition the Administrator for reconsideration of final action taken in proceedings subject to subpart C or E of this part.

(b) The petition must specify with particularity the grounds for modification or revocation of the action in question.

(c) The Administrator does not consider repetitious petitions.

(d) Unless the Administrator specifically provides otherwise, and gives notice to interested parties or publishes notice in the FEDERAL REGISTER, the filing of a petition under this section does not stay the effectiveness of the action sought to be reconsidered.

§ 211.59 Proceedings on petitions for reconsideration.

(a) The Administrator may invite public comment or seek a response from the party at whose request the final action was taken before deciding a petition for reconsideration submitted under § 211.57.

(b) The Administrator may reaffirm, modify, or revoke the final action without further proceedings and shall issue notification of his decision to the petitioner and other interested parties or publish a notice in the FEDERAL REGISTER. Each petition for reconsideration shall be decided not later than 4 months after receipt. Petitions for reconsideration relating to the same rule may be consolidated for decision. In the event the Administrator determines to reconsider a final action, and appropriate notice is published in the FEDERAL REGISTER.

§ 211.61 Informal safety inquiries.

The Administrator may conduct informal safety inquiries to collect information on selected topics relating to railroad safety. A notice of each such inquiry will be published in the FEDERAL REGISTER outlining the area of inquiry and inviting interested persons to assist by submitting written material or participating in informal public conferences and discussions. Upon completion of the inquiry, the Administrator will review the information obtained and may, on his own motion, initiate a rulemaking proceeding under § 211.13 or take whatever other action he deems appropriate.

Subpart F—Interim Procedures for the Review of Emergency Orders

AUTHORITY: Secs. 203 and 208(a), 84 Stat. 972, 974–975 (45 U.S.C. 432, 437(a)) and 5 U.S.C. 554–559.

SOURCE: 44 FR 13029, Mar. 9, 1979, unless otherwise noted.

§ 211.71 General.

(a) This subpart consists of interim procedures for the review of emergency orders issued under section 203 of the Federal Railroad Safety Act of 1970, supplementing § 211.47 of this part.

(b) Proceedings under this subpart are subject to the requirements of 5 U.S.C. 554–559.

(c) Notwithstanding §211.1 of this part, as used in this subpart *Administrator* means the Federal Railroad Administrator or Deputy Administrator.

§211.73 Presiding officer; powers.

(a) An administrative hearing for the review of an emergency order is presided over by the Administrator or by an administrative law judge designated at the request of FRA pursuant to 5 CFR 930.213.

(b) The presiding officer may exercise the powers of the FRA to regulate the conduct of the hearing and associated proceedings for the purpose of achieving a prompt and fair determination of all material issues in controversy.

(c) The final decision of the presiding officer shall set forth findings and conclusions based on the administrative record. That decision may set aside, modify or affirm the requirements of the emergency order under review.

(d) Except as provided in §211.77, the decision of the presiding officer is administratively final.

§211.75 Evidence.

(a) The Federal Rules of Evidence for United States Courts and Magistrates shall be employed as general guidelines for the introduction of evidence in proceedings under this subpart. However, except as provided in paragraph (b) of this section, all relevant and probative evidence offered by a party shall be received in evidence.

(b) The presiding officer may deny the admission of evidence which is determined to be—

(1) Unduly repetitive; or

(2) So extensive and lacking in relevance or probative effect that its admission would impair the prompt, orderly, and fair resolution of the proceeding.

§211.77 Appeal to the Administrator.

(a) Any party aggrieved by the final decision of a presiding officer (other than the Administrator) may appeal to the Administrator. The appeal must be filed within twenty (20) days from issuance of the presiding officer's decision and must set forth the specific exceptions of the party to the decision, making reference to the portions of the administrative record which are believed to support the exceptions. The notice of appeal and any supporting papers shall be accompanied by a certificate stating that they have been served on all parties to the proceeding.

(b) [Reserved]

APPENDIX A TO PART 211—STATEMENT OF AGENCY POLICY CONCERNING WAIVERS RELATED TO SHARED USE OF TRACKAGE OR RIGHTS-OF-WAY BY LIGHT RAIL AND CONVENTIONAL OPERATIONS

1. By statute, the Federal Railroad Administration (FRA) may grant a waiver of any rule or order if the waiver ''is in the public interest and consistent with railroad safety.'' 49 U.S.C. 20103(d). Waiver petitions are reviewed by FRA's Railroad Safety Board (the ''Safety Board'') under the provisions of 49 CFR part 211. Waiver petitions must contain the information required by 49 CFR 211.9. The Safety Board can, in granting a waiver, impose any conditions it concludes are necessary to assure safety or are in the public interest. If the conditions under which the waiver was granted change substantially, or unanticipated safety issues arise, FRA may modify or withdraw a waiver in order to ensure safety.

2. Light rail equipment, commonly referred to as trolleys or street railways, is not designed to be used in situations where there is a reasonable likelihood of a collision with much heavier and stronger conventional rail equipment. However, existing conventional railroad tracks and rights-of-way provide attractive opportunities for expansion of light rail service.

3. Light rail operators who intend to share use of the general railroad system trackage with conventional equipment and/or whose operations constitute commuter service (*see* Appendix A of 49 CFR part 209 for relevant definitions) will either have to comply with FRA's safety rules or obtain a waiver of appropriate rules. Light rail operators whose operations meet the definition of urban rapid transit and who will share a right-of-way or corridor with a conventional railroad but will not share trackage with that railroad will be subject to only those rules that pertain to any significant point of connection to the general system, such as a rail crossing at grade, a shared method of train control, or shared highway-rail grade crossings.

4. Shared use of track refers to situations where light rail transit operators conduct their operations over the lines of the general system, and includes light rail operations

that are wholly separated in time (temporally separated) from conventional operations as well as light rail operations operating on the same trackage at the same time as conventional rail equipment (simultaneous joint use). Where shared use of general system trackage is contemplated, FRA believes a comprehensive waiver request covering all rules for which a waiver is sought makes the most sense. FRA suggests that a petitioner caption such a waiver petition as a Petition for Approval of Shared Use so as to distinguish it from other types of waiver petitions. The light rail operator should file the petition. All other affected railroads will be able to participate in the waiver proceedings by commenting on the petition and providing testimony at a hearing on the petition if anyone requests such a hearing. If any other railroad will be affected by the proposed operation in such a way as to necessitate a waiver of any FRA rule, that railroad may either join with the light rail operator in filing the comprehensive petition or file its own petition.

5. In situations where the light rail operator is an urban rapid transit system that will share a right-of-way or corridor with the conventional railroad but not share trackage, any waiver petition should cover only the rules that may apply at any significant points of connection between the rapid transit line and the other railroad. A Petition for Approval of Shared Use would not be appropriate in such a case.

I. Preliminary Jurisdictional Determinations

Where a light rail operator is uncertain whether the planned operation will be subject to FRA's safety jurisdiction and, if so, to what extent, the operator may wish to obtain FRA's views on the jurisdictional issues before filing a waiver petition. In that case, the light rail operator (here including a transit authority that may not plan to actually operate the system itself) should write to FRA requesting such a determination. The letter should be addressed to Chief Counsel, Federal Railroad Administration, 1120 Vermont Ave., NW., Mail Stop 10, Washington, DC 20590, with a copy to the Associate Administrator for Safety at the same address at Mail Stop 25. The letter should address the criteria (found in 49 CFR part 209, appendix A) FRA uses to determine whether it has jurisdiction over a rail operation and to distinguish commuter from urban rapid transit service. A complete description of the nature of the contemplated operation is essential to an accurate determination. FRA will attempt to respond promptly to such a request. Of course, FRA's response will be based only on the facts as presented by the light rail operator. If FRA subsequently learns that the facts are different from those presented or have changed substantially, FRA may revise its initial determination.

II. General Factors To Address in a Petition for Approval of Shared Use

1. Like all waiver petitions, a Petition for Approval of Shared Use will be reviewed by the Safety Board. A non-voting FTA liaison to the Safety Board will participate in an advisory capacity in the Safety Board's consideration of all such petitions. This close cooperation between the two agencies will ensure that FRA benefits from the insights, particularly with regard to operational and financial issues, that FTA can provide about light rail operations, as well as from FTA's knowledge of and contacts with state safety oversight programs. This working relationship will also ensure that FTA has a fuller appreciation of the safety issues involved in each specific shared use operation and a voice in shaping the safety requirements that will apply to such operations.

2. FRA resolves each waiver request on its own merits based on the information presented and the agency's own investigation of the issues. In general, the greater the safety risks inherent in a proposed operation the greater will be the mitigation measures required. While FRA cannot state in advance what kinds of waivers will be granted or denied, we can provide guidance to those who may likely be requesting waivers to help ensure that their petitions address factors that FRA will no doubt consider important.

3. FRA's procedural rules give a general description of what any waiver petition should contain, including an explanation of the nature and extent of the relief sought; a description of the persons, equipment, installations, and locations to be covered by the waiver; an evaluation of expected costs and benefits; and relevant safety data. 49 CFR 211.9. The procedural rules, of course, are not specifically tailored to situations involving light rail operations over the general system, where waiver petitions are likely to involve many of FRA's regulatory areas. In such situations, FRA suggests that a Petition for Approval of Shared Use address the following general factors.

A. *Description of operations.* You should explain the frequency and speeds of all operations on the line and the nature of the different operations. You should explain the nature of any connections between the light rail and conventional operations.

•If the light rail line will operate on any segments (*e.g.*, a street railway portion) that will not be shared by a conventional railroad, describe those segments and their connection with the shared use segments. If the petitioner has not previously sought and received a determination from FRA concerning jurisdictional issues, explain, using the criteria set out in 49 CFR part 209, Appendix A,

whether the light rail operation is, in the petitioner's view, a commuter operation or urban rapid transit.

•You should describe precisely what the respective hours of operation will be for each type of equipment on the shared use segments. If light rail and conventional operations will occur only at different times of day, describe what means of protection will ensure that the different types of equipment are not operated simultaneously on the same track, and how protection will be provided to ensure that, where one set of operations begins and the other ends, there can be no overlap that would possibly result in a collision.

•If the light rail and conventional operations will share trackage during the same time periods, the petitioners will face a steep burden of demonstrating that extraordinary safety measures will be taken to adequately reduce the likelihood of a collision between conventional and light rail equipment to the point where the safety risks associated with joint use would be acceptable. You should explain the nature of such simultaneous joint use, the system of train control, the frequency and proximity of both types of operations, the training and qualifications of all operating personnel in both types of operations, and all methods that would be used to prevent collisions. You should also include a quantitative risk assessment concerning the risk of collision between the light rail and conventional equipment under the proposed operating scenario.

B. *Description of equipment.* (1) You should describe all equipment that will be used by the light rail and conventional operations. Where the light rail equipment does not meet the standards of 49 CFR part 238, you should provide specifics on the crash survivability of the light rail equipment, such as static end strength, sill height, strength of corner posts and collision posts, side strength, etc.

(2) Given the structural incompatibility of light rail and conventional equipment, FRA has grave concerns about the prospect of operating these two types of equipment simultaneously on the same track. If the light rail and conventional operations will share trackage during the same time periods, you should provide an engineering analysis of the light rail equipment's resistance to damage in various types of collisions, including a worst case scenario involving a failure of the collision avoidance systems resulting in a collision between light rail and conventional equipment at track speeds.

C. *Alternative safety measures to be employed in place of each rule for which waiver is sought.* The petition should specify exactly which rules the petitioner desires to be waived. For each rule, the petition should explain exactly how a level of safety at least equal to that afforded by the FRA rule will be provided by the alternative measures the petitioner proposes.

(1) Most light rail operations that entail some shared use of the general system will also have segments that are not on the general system. FTA's rules on rail fixed guideway systems will probably apply to those other segments. If so, the petition for waiver of FRA's rules should explain how the system safety program plan adopted under FTA's rules may affect safety on the portions of the system where FRA's rules apply. Under certain circumstances, effective implementation of such a plan may provide FRA sufficient assurance that adequate measures are in place to warrant waiver of certain FRA rules.

(2) In its petition, the light rail operator may want to certify that the subject matter addressed by the rule to be waived is addressed by the system safety plan and that the light rail operation will be monitored by the state safety oversight program. That is likely to expedite FRA's processing of the petition. FRA will analyze information submitted by the petitioner to demonstrate that a safety matter is addressed by the light rail operator's system safety plan. Alternately, conditional approval may be requested at an early stage in the project, and FRA would thereafter review the system safety program plan's status to determine readiness to commence operations. Where FRA grants a waiver, the state agency will oversee the area addressed by the waiver, but FRA will actively participate in partnership with FTA and the state agency to address any safety problems.

D. *Documentation of agreement with affected railroads.* Conventional railroads that will share track with the light rail operation need not join as a co-petitioner in the light rail operator's petition. However, the petition should contain documentation of the precise terms of the agreement between the light rail operator and the conventional railroad concerning any actions that the conventional railroad must take to ensure effective implementation of alternative safety measures. For example, if temporal separation is planned, FRA expects to see the conventional railroad's written acceptance of its obligations to ensure that the separation is achieved. Moreover, if the arrangements for the light rail service will require the conventional railroad to employ any alternative safety measures rather than strictly comply with FRA's rules, that railroad will have to seek its own waiver (or join in the light rail operator's petition).

III. Waiver Petitions Involving No Shared Use of Track and Limited Connections Between Light Rail and Conventional Operations

Even where there is no shared use of track, light rail operators may be subject to certain

FRA rules based on limited, but significant connections to the general system.

1. *Rail crossings at grade.* Where a light rail operation and a conventional railroad have a crossing at grade, several FRA rules may apply to the light rail operation at the point of connection. If movements at the crossing are governed by a signal system, FRA's signal rules (49 CFR parts 233, 235, and 236) apply, as do the signal provisions of the hours of service statute, 49 U.S.C. 21104. To the extent radio communication is used to direct the movements, the radio rules (part 220) apply. The track rules (part 213) cover any portion of the crossing that may affect the movement of the conventional railroad. Of course, if the conventional railroad has responsibility for compliance with certain of the rules that apply at that point (for example, where the conventional railroad maintains the track and signals and dispatches all trains), the light rail operator will not have compliance responsibility for those rules and would not need a waiver.

2. *Shared train control systems.* Where a light rail operation is governed by the same train control system as a conventional railroad (e.g., at a moveable bridge that they both traverse), the light rail operator will be subject to applicable FRA rules (primarily the signal rules in parts 233, 235, and 236) if it has maintenance or operating responsibility for the system.

3. *Highway-Rail Grade Crossings.* Light rail operations over highway-rail grade crossings also used by conventional trains will be subject to FRA's rules on grade crossing signal system safety (part 234) and the requirement to have auxiliary lights on locomotives (49 CFR 229.125). Even if the conventional railroad maintains the crossing, the light rail operation will still be responsible for reporting and taking appropriate actions in response to warning system malfunctions.

In any of these shared right-of-way situations involving significant connections, the light rail operator may petition for a waiver of any rules that apply to its activities.

IV. Factors To Address Related to Specific Regulations and Statutes

Operators of light rail systems are likely to apply for waivers of many FRA rules. FRA offers the following suggestions on factors petitioners may want to address concerning specific areas of regulation. (All ''part'' references are to title 49 CFR.) Parts 209 (Railroad Safety Enforcement Procedures), 211 (Rules of Practice), 212 (State Safety Participation), and 216 (Special Notice and Emergency Order Procedures) are largely procedural rules that are unlikely to be the subject of waivers, so those parts are not discussed further. For segments of a light rail line not involving operations over the general system, assuming the light rail operation meets the definition of ''rapid transit,'' FRA's standards do not apply and the petition need not address those segments with regard to each specific rule from which waivers are sought with regard to shared use trackage.

1. Track, structures, and signals.

A. *Track safety standards (part 213).* For general system track used by both the conventional and light rail lines, the track standards apply and a waiver is very unlikely. A light rail operation that owns track over which the conventional railroad operates may wish to consider assigning responsibility for that track to the other railroad. If so, the track owner must follow the procedure set forth in 49 CFR 213.5(c). Where such an assignment occurs, the owner and assignee are responsible for compliance.

B. *Signal systems reporting requirements (part 233).* This part contains reporting requirements with respect to methods of train operation, block signal systems, interlockings, traffic control systems, automatic train stop, train control, and cab signal systems, or other similar appliances, methods, and systems. If a signal system failure occurs on general system track which is used by both conventional and light rail lines, and triggers the reporting requirements of this part, the light rail operator must file, or cooperate fully in the filing of, a signal system report. The petition should explain whether the light rail operator or conventional railroad is responsible for maintaining the signal system. Assuming that the light rail operator (or a contractor hired by this operator) has responsibility for maintaining the signal system, that entity is the logical choice to file each signal failure report, and a waiver is very unlikely. Moreover, since a signal failure first observed by a light rail operator can later have catastrophic consequences for a conventional railroad using the same track, a waiver would jeopardize rail safety on that general system trackage. Even if the conventional railroad is responsible for maintaining the signal systems, the light rail operator must still assist the railroad in reporting all signal failures by notifying the conventional railroad of such failures.

C. *Grade crossing signal system safety (part 234).* This part contains minimum standards for the maintenance, inspection, and testing of highway-rail grade crossing warning systems, and also prescribes standards for the reporting of system failures and minimum actions that railroads must take when such warning systems malfunction. If a grade crossing accident or warning activation failure occurs during light rail operations on general system track that is used by both conventional and light rail lines, the light rail operator must submit, or cooperate with the other railroad to ensure the submission

of, a report to FRA within the required time frame (24 hours for an accident report, or 15 days for a grade crossing signal system activation failure report). The petition should explain whether the light rail operator or conventional railroad is responsible for maintaining the grade crossing devices. Assuming that the light rail operator (or a contractor hired by this operator) has responsibility for maintaining the grade crossing devices, that entity is the logical choice to file each grade crossing signal failure report, and a waiver is very unlikely. Moreover, since a grade crossing warning device failure first observed by a light rail operator can later have catastrophic consequences for a conventional railroad using the same track, a waiver would jeopardize rail safety on that general system trackage. However, if the conventional railroad is responsible for maintaining the grade crossing devices, the light rail operator will still have to assist the railroad in reporting all grade crossing signal failures. Moreover, regardless of which railroad is responsible for maintenance of the grade crossing signals, any railroad (including a light rail operation) operating over a crossing that has experienced an activation failure, partial activation, or false activation must take the steps required by this rule to ensure safety at those locations. While the maintaining railroad will retain all of its responsibilities in such situations (such as contacting train crews and notifying law enforcement agencies), the operating railroad must observe requirements concerning flagging, train speed, and use of the locomotive's audible warning device.

D. *Approval of signal system modifications (part 235).* This part contains instructions governing applications for approval of a discontinuance or material modification of a signal system or relief from the regulatory requirements of part 236. In the case of a signal system located on general system track which is used by both conventional and light rail lines, a light rail operation is subject to this part only if it (or a contractor hired by the operator) owns or has responsibility for maintaining the signal system. If the conventional railroad does the maintenance, then that railroad would file any application submitted under this part; the light rail operation would have the right to protest the application under §235.20. The petition should discuss whether the light rail operator or conventional railroad is responsible for maintaining the signal system.

E. *Standards for signal and train control systems (part 236).* This part contains rules, standards, and instructions governing the installation, inspection, maintenance, and repair of signal and train control systems, devices, and appliances. In the case of a signal system located on general system track which is used by both conventional and light rail lines, a light rail operation is subject to this part only if it (or a contractor hired by the operation) owns or has responsibility for installing, inspecting, maintaining, and repairing the signal system. If the light rail operation has these responsibilities, a waiver would be unlikely because a signal failure would jeopardize the safety of both the light rail operation and the conventional railroad. If the conventional railroad assumes all of the responsibilities under this part, the light rail operation would not need a waiver, but it would have to abide by all operational limitations imposed this part and by the conventional railroad. The petition should discuss whether the light rail operator or conventional railroad has responsibility for installing, inspecting, maintaining, and repairing the signal system.

2. Motive power and equipment.

A. *Railroad noise emission compliance regulations (part 210).* FRA issued this rule under the Noise Control Act of 1972, 42 U.S.C. 4916, rather than under its railroad safety authority. Because that statute included a definition of ''railroad'' borrowed from one of the older railroad safety laws, this part has an exception for ''street, suburban, or interurban electric railways unless operated as a part of the general railroad system of transportation.'' 49 CFR 210.3(b)(2). The petition should address whether this exception may apply to the light rail operation. Note that this exception is broader than the sole exception to the railroad safety statutes (i.e., urban rapid transit not connected to the general system). The greater the integration of the light rail and conventional operations, the less likely this exception would apply.

If the light rail equipment would normally meet the standards in this rule, there would be no reason to seek a waiver of it. If it appears that the light rail system would neither meet the standards nor fit within the exception, the petition should address noise mitigation measures used on the system, especially as part of a system safety program. Note, however, that FRA lacks the authority to waive certain Environmental Protection Agency standards (40 CFR part 201) that underlie this rule. See 49 CFR 210.11(a).

B. *Railroad freight car safety standards (part 215).* A light rail operator is likely to move freight cars only in connection with maintenance-of-way work. As long as such cars are properly stenciled in accordance with section 215.305, this part does not otherwise apply, and a waiver would seem unnecessary.

C. *Rear end marking devices (part 221).* This part requires that each train occupying or operating on main line track be equipped with, display, and continuously illuminate or flash a marking device on the trailing end of the rear car during periods of darkness or other reduced visibility. The device, which must be approved by FRA, must have specific intensity, beam arc width, color, and

flash rate characteristics. A light rail operation seeking a waiver of this part will need to explain how other marking devices with which it equips its vehicles, or other means such as train control, will provide the same assurances as this part of a reduced likelihood of collisions attributable to the failure of an approaching train to see the rear end of a leading train in time to stop short of it during periods of reduced visibility. The petition should describe the light rail vehicle's existing marking devices (e.g., headlights, brakelights, taillights, turn signal lights), and indicate whether the vehicle bears reflectors. If the light rail system will operate in both a conventional railroad environment and in streets mixed with motor vehicles, the petition should discuss whether adapting the design of the vehicle's lighting characteristics to conform to FRA's regulations would adversely affect the safety of its operations in the street environment. A light rail system that has a system safety program developed under FTA's rules may choose to discuss how that program addresses the need for equivalent levels of safety when its vehicles operate on conventional railroad corridors.

D. *Safety glazing standards (part 223)*. This part provides that passenger car windows be equipped with FRA-certified glazing materials in order to reduce the likelihood of injury to railroad employees and passengers from the breakage and shattering of windows and avoid ejection of passengers from the vehicle in a collision. This part, in addition to requiring the existence of at least four emergency windows, also requires window markings and operating instructions for each emergency window, as well as for each window intended for emergency access, so as to provide the necessary information for evacuation of a passenger car. FRA will not permit operations to occur on the general system in the absence of effective alternatives to the requirements of this part that provide an equivalent level of safety. The petition should explain what equivalent safeguards are in place to provide the same assurance as part 223 that passengers and crewmembers are safe from the effects of objects striking a light rail vehicle's windows. The petition should also discuss the design characteristics of its equipment when it explains how the safety of its employees and passengers will be assured during an evacuation in the absence of windows meeting the specific requirements of this part. A light rail system that has a system safety program plan developed under FTA's rule may be able to demonstrate that the plan satisfies the safety goals of this part.

E. *Locomotive safety standards (part 229)*. (1) This part contains minimum safety standards for all locomotives, except those propelled by steam power. FRA recognizes that due to the unique characteristics of light rail equipment, some of these provisions may be irrelevant to light rail equipment, and that others may not fit properly in the context of light rail operations. A waiver petition should explain precisely how the light rail system's practices will provide for the safe condition and operation of its locomotive equipment.

(2) FRA is not likely to waive completely the provision (section 229.125) of this rule concerning auxiliary lights designed to warn highway motorists of an approaching train. In order to reduce the risk of grade crossing accidents, it is important that all locomotives used by both conventional railroads and light rail systems present the same distinctive profile to motor vehicle operators approaching grade crossings on the general railroad system. If uniformity is sacrificed by permitting light rail systems to operate locomotives through the same grade crossings traversed by conventional trains with light arrangements placed in different locations on the equipment, safety could be compromised. Accordingly, the vehicle design should maintain the triangular pattern required of other locomotives and cab cars to the extent practicable.

(3) FRA is aware that light rail headlights are likely to produce less than 200,000 candela. While some light rail operators may choose to satisfy the requirements of section 229.125 by including lights on their equipment of different candlepower controlled by dimmer switches, the headlights on the majority of light rail vehicles will likely not meet FRA's minimum requirement. However, based on the nature of the operations of light rail transit, FRA recognizes that waivers of the minimum candela requirement for transit vehicle headlights seems appropriate.

F. *Safety appliance laws (49 U.S.C. 20301–20305)*. (1) Since certain safety appliance requirements (e.g., automatic couplers) are statutory, they can only be ''waived'' by FRA under the exemption conditions set forth in 49 U.S.C. 20306. Because exemptions requested under this statutory provision do not involve a waiver of a safety rule, regulation, or standard (see 49 CFR 211.41), FRA is not required to follow the rules of practice for waivers contained in part 211. However, whenever appropriate, FRA will combine its consideration of any request for an exemption under §20306 with its review under part 211 of a light rail operation's petition for waivers of FRA's regulations.

(2) FRA may grant exemptions from the statutory safety appliance requirements in 49 U.S.C. 20301–20305 only if application of such requirements would ''preclude the development or implementation of more efficient railroad transportation equipment or other transportation innovations.'' 49 U.S.C. 20306. The exemption for technological improvements was originally enacted to further the implementation of a specific type of

freight car, but the legislative history shows that Congress intended the exemption to be used elsewhere so that ''other types of railroad equipment might similarly benefit.'' S. Rep. 96–614 at 8 (1980), reprinted in 1980 U.S.C.C.A.N. 1156,1164.

(3) FRA recognizes the potential public benefits of allowing light rail systems to take advantage of underutilized urban freight rail corridors to provide service that, in the absence of the existing right-of-way, would be prohibitively expensive. Any petitioner requesting an exemption for technological improvements should carefully explain how being forced to comply with the existing statutory safety appliance requirements would conflict with the exemption exceptions set forth at 49 U.S.C. 20306. The petition should also show that granting the exemption is in the public interest and is consistent with assuring the safety of the light rail operator's employees and passengers.

G. *Safety appliance standards (part 231).* (1) The regulations in this part specify the requisite location, number, dimensions, and manner of application of a variety of railroad car safety appliances (e.g., handbrakes, ladders, handholds, steps), and directly implement a number of the statutory requirements found in 49 U.S.C. 20301–20305. These very detailed regulations are intended to ensure that sufficient safety appliances are available and able to function safely and securely as intended.

(2) FRA recognizes that due to the unique characteristics of light rail equipment, some of these provisions may be irrelevant to light rail operation, and that others may not fit properly in the context of light rail operations (e.g., crewmembers typically do not perform yard duties from positions outside and adjacent to the light rail vehicle or near the vehicle's doors). However, to the extent that the light rail operation encompasses the safety risks addressed by the regulatory provisions of this part, a waiver petition should explain precisely how the light rail system's practices will provide for the safe operation of its passenger equipment. The petition should focus on the design specifications of the equipment, and explain how the light rail system's operating practices, and its intended use of the equipment, will satisfy the safety purpose of the regulations while providing at least an equivalent level of safety.

H. *Passenger equipment safety standards (part 238).* This part prescribes minimum Federal safety standards for railroad passenger equipment. Since a collision on the general railroad system between light rail equipment and conventional rail equipment could prove catastrophic, because of the significantly greater mass and structural strength of the conventional equipment, a waiver petition should describe the light rail operation's system safety program that is in place to minimize the risk of such a collision. The petition should discuss the light rail operation's operating rules and procedures, train control technology, and signal system. If the light rail operator and conventional railroad will operate simultaneously on the same track, the petition should include a quantitative risk assessment that incorporates design information and provide an engineering analysis of the light rail equipment and its likely performance in derailment and collision scenarios. The petitioner should also demonstrate that risk mitigation measures to avoid the possibility of collisions, or to limit the speed at which a collision might occur , will be employed in connection with the use of the equipment on a specified shared-use rail line. This part also contains requirements concerning power brakes on passenger trains, and a petitioner seeking a waiver in this area should refer to these requirements, not those found in 49 CFR part 232.

3. Operating practices.

A. *Railroad workplace safety (part 214).* (1) This part contains standards for protecting bridge workers and roadway workers. The petition should explain whether the light rail operator or conventional railroad is responsible for bridge work on shared general system trackage. If the light rail operator does the work and does similar work on segments outside of the general system, it may wish to seek a waiver permitting it to observe OSHA standards throughout its system.

(2) There are no comparable OSHA standards protecting roadway workers. The petition should explain which operator is responsible for track and signal work on the shared segments. If the light rail operator does this work, the petition should explain how the light rail operator protects these workers. However, to the extent that protection varies significantly from FRA's rules, a waiver permitting use of the light rail system's standards could be very confusing to train crews of the conventional railroad who follow FRA's rules elsewhere. A waiver of this rule is unlikely. A petition should address how such confusion would be avoided and safety of roadway workers would be ensured.

B. *Railroad operating rules (part 217).* This part requires filing of a railroad's operating rules and that employees be instructed and tested on compliance with them. A light rail operation would not likely have difficulty complying with this part. However, if a waiver is desired, the light rail system should explain how other safeguards it has in place provide the same assurance that operating employees are trained and periodically tested on the rules that govern train operation. A light rail system that has a system safety program plan developed under FTA's rules

may be in a good position to give such an assurance.

C. *Railroad operating practices (part 218).* This part requires railroads to follow certain practices in various aspects of their operations (protection of employees working on equipment, protection of trains and locomotives from collisions in certain situations, prohibition against tampering with safety devices, protection of occupied camp cars). Some of these provisions (*e.g.,* camp cars) may be irrelevant to light rail operations. Others may not fit well in the context of light rail operations. To the extent the light rail operation presents the risks addressed by the various provisions of this part, a waiver provision should explain precisely how the light rail system's practices will address those risks. FRA is not likely to waive the prohibition against tampering with safety devices, which would seem to present no particular burden to light rail operations. Moreover, blue signal regulations, which protect employees working on or near equipment, are not likely to be waived to the extent that such work is performed on track shared by a light rail operation and a conventional railroad, where safety may best be served by uniformity.

D. *Control of alcohol and drug use (part 219).* FRA will not permit operations to occur on the general system in the absence of effective rules governing alcohol and drug use by operating employees. FTA's own rules may provide a suitable alternative for a light rail system that is otherwise governed by those rules. However, to the extent that light rail and conventional operations occur simultaneously on the same track, FRA is not likely to apply different rules to the two operations, particularly with respect to post-accident testing, for which FRA requirements are more extensive (e.g., section 219.11(f) addresses the removal, under certain circumstances, of body fluid and/or tissue samples taken from the remains of any railroad employee who performs service for a railroad). (FRA recognizes that in the event of a fatal train accident involving a transit vehicle, whether involving temporal separation or simultaneous use of the same track, the National Transportation Safety Board will likely investigate and obtain its own toxicology test results.)

E. *Railroad communications (part 220).* A light rail operation is likely to have an effective system of radio communication that may provide a suitable alternative to FRA's rules. However, the greater the need for radio communication between light rail personnel (*e.g.,* train crews or dispatchers) and personnel of the conventional railroad (*e.g.,* train crews, roadway workers), the greater will be the need for standardized communication rules and, accordingly, the less likely will be a waiver.

F. *Railroad accident/incident reporting (part 225).* (1) FRA's accident/incident information is very important in the agency's decision-making on regulatory issues and strategic planning. A waiver petition should indicate precisely what types of accidents and incidents it would report, and to whom, under any alternative it proposes. FRA is not likely to waive its reporting requirements concerning train accidents or highway-rail grade crossing collisions that occur on the general railroad system. Reporting of accidents under FTA's rules is quite different and would not provide an effective substitute. However, with regard to employee injuries, the light rail operation may, absent FRA's rules, otherwise be subject to reporting requirements of FTA and OSHA and may have an interest in uniform reporting of those injuries wherever they occur on the system. Therefore, it is more likely that FRA would grant a waiver with regard to reporting of employee injuries.

(2) Any waiver FRA may grant in the accident/incident reporting area would have no effect on FRA's authority to investigate such incidents or on the duties of light rail operators and any other affected railroads to cooperate with those investigations. See sections 225.31 and 225.35 and 49 U.S.C. 20107 and 20902. Light rail operators should anticipate that FRA will investigate any serious accident or injury that occurs on the shared use portion of their lines, even if it occurs during hours when only the light rail trains are operating. Moreover, there may be instances when FRA will work jointly with FTA and the state agency to investigate the cause of a transit accident that occurs off the general system under circumstances that raise concerns about the safety of operations on the shared use portions. For example, if a transit operator using the same light rail equipment on the shared and non-shared-use portions of its operation has a serious accident on the non-shared-use portion, FRA may want to determine whether the cause of the accident pointed to a systemic problem with the equipment that might impact the transit system's operations on the general system. Similarly, where human error might be a factor, FRA may want to determine whether the employee potentially at fault also has safety responsibilities on the general system and, if so, take appropriate action to ensure that corrective action is taken. FRA believes its statutory investigatory authority extends as far as necessary to address any condition that might reasonably be expected to create a hazard to railroad operations within its jurisdiction.

G. *Hours of service laws (49 U.S.C. 21101–21108).* (1) The hours of service laws apply to all railroads subject to FRA's jurisdiction, and govern the maximum work hours and minimum off-duty periods of employees engaged in one or more of the three categories

of covered service described in 49 U.S.C. 21101. If an individual performs more than one kind of covered service during a tour of duty, then the most restrictive of the applicable limitations control. Under current law, a light rail operation could request a waiver of the substantive provisions of the hours of service laws only under the ''pilot project'' provision described in 49 U.S.C. 21108, provided that the request is based upon a joint petition submitted by the railroad and its affected labor organizations. Because waivers requested under this statutory provision do not involve a waiver of a safety rule, regulation, or standard (see 49 CFR 211.41), FRA is not required to follow the rules of practice for waivers contained in part 211. However, whenever appropriate, FRA will combine its consideration of any request for a waiver under §21108 with its review under part 211 of a light rail operation's petition for waivers of FRA's regulations.

(2) If such a statutory waiver is desired, the light rail system will need to assure FRA that the waiver of compliance is in the public interest and consistent with railroad safety. The waiver petition should include a discussion of what fatigue management strategies will be in place for each category of covered employees in order to minimize the effects of fatigue on their job performance. However, FRA is unlikely to grant a statutory waiver covering employees of a light rail operation who dispatch the trains of a conventional railroad or maintain a signal system affecting shared use trackage.

H. *Hours of service recordkeeping (part 228).* This part prescribes reporting and recordkeeping requirements with respect to the hours of service of employees who perform the job functions set forth in 49 U.S.C. 21101. As a general rule, FRA anticipates that any waivers granted under this part will only exempt the same groups of employees for whom a light rail system has obtained a waiver of the substantive provisions of the hours of service laws under 49 U.S.C. 21108. Since it is important that FRA be able to verify that a light rail operation is complying with the on- and off-duty restrictions of the hour of service laws for all employees not covered by a waiver of the laws' substantive provisions, it is unlikely that any waiver granted of the reporting and recordkeeping requirements would exclude those employees. However, in a system with fixed work schedules that do not approach 12 hours on duty in the aggregate, it may be possible to utilize existing payroll records to verify compliance.

I. *Passenger train emergency preparedness (part 239).* This part prescribes minimum Federal safety standards for the preparation, adoption, and implementation of emergency preparedness plans by railroads connected with the operation of passenger trains. FRA's expectation is that by requiring affected railroads to provide sufficient emergency egress capability and information to passengers, along with mandating that these railroads coordinate with local emergency response officials, the risk of death or injury from accidents and incidents will be lessened. A waiver petition should state whether the light rail system has an emergency preparedness plan in place under a state system safety program developed under FTA's rules for the light rail operator's separate street railway segments. Under a system safety program, a light rail operation is likely to have an effective plan for dealing with emergency situations that may provide an equivalent alternative to FRA's rules. To the extent that the light rail operation's plan relates to the various provisions of this part, a waiver petition should explain precisely how each of the requirements of this part is being addressed. The petition should especially focus on the issues of communication, employee training, passenger information, liaison relationships with emergency responders, and marking of emergency exits.

J. *Qualification and certification of locomotive engineers (part 240).* This part contains minimum Federal safety requirements for the eligibility, training, testing, certification, and monitoring of locomotive engineers. Those who operate light rail trains may have significant effects on the safety of light rail passengers, motorists at grade crossings, and, to the extent trackage is shared with conventional railroads, the employees and passengers of those railroads. The petition should describe whether a light rail system has a system safety plan developed under FTA's rules that is likely to have an effective means of assuring that the operators, or ''engineers,'' of its equipment receive the necessary training and have proper skills to operate a light rail vehicle in shared use on the general railroad system. The petition should explain what safeguards are in place to ensure that light rail engineers receive at least an equivalent level of training, testing, and monitoring on the rules governing train operations to that received by locomotive engineers employed by conventional railroads and certified under part 240. Any light rail system unable to meet this burden would have to fully comply with the requirements of part 240. Moreover, where a transit system intends to operate simultaneously on the same track with conventional equipment, FRA will not be inclined to waive the part 240 requirements. In that situation, FRA's paramount concern would be uniformity of training and qualifications of all those operating trains on the general system, regardless of the type of equipment.

V. WAIVERS THAT MAY BE APPROPRIATE FOR TIME-SEPARATED LIGHT RAIL OPERATIONS

1. The foregoing discussion of factors to address in a petition for approval of shared use concerns all such petitions and, accordingly, is quite general. FRA is willing to provide more specific guidance on where waivers may be likely with regard to light rail operations that are time-separated from conventional operations. FRA's greatest concern with regard to shared use of the general system is a collision between light rail and conventional trains on the same track. Because the results could well be catastrophic, FRA places great emphasis on avoiding such collisions. The surest way to guarantee that such collisions will not occur is to strictly segregate light rail and conventional operations by time of day so that the two types of equipment never share the same track at the same time. This is not to say that FRA will not entertain waiver petitions that rely on other methods of collision avoidance such as sophisticated train control systems. However, petitioners who do not intend to separate light rail from conventional operations by time of day will face a steep burden of demonstrating an acceptable level of safety. FRA does not insist that all risk of collision be eliminated. However, given the enormous severity of the likely consequences of a collision, the demonstrated risk of such an event must be extremely remote.

2. There are various ways of providing such strict separation by time. For example, freight operations could be limited to the hours of midnight to 5 a.m. when light rail operations are prohibited. Or, there might be both a nighttime and a mid-day window for freight operation. The important thing is that the arrangement not permit simultaneous operation on the same track by clearly defining specific segments of the day when only one type of operation may occur. Mere spacing of train movements by a train control system does not constitute this temporal separation.

3. FRA is very likely to grant waivers of many of its rules where complete temporal separation between light rail and conventional operations is demonstrated in the waiver request. The chart below lists each of FRA's railroad safety rules and provides FRA's view on whether it is likely to grant a waiver in a particular area where temporal separation is assured. Where the ''Likely Treatment'' column says ''comply'' a waiver is not likely, and where it says ''waive'' a waiver is likely. Of course, FRA will consider each petition on its own merits and one should not presume, based on the chart, that FRA will grant or deny any particular request in a petition. This chart is offered as general guidance as part of a statement of policy, and as such does not alter any safety rules or obligate FRA to follow it in every case. This chart assumes that the operations of the local rail transit agency on the general railroad system are completely separated in time from conventional railroad operations, and that the light rail operation poses no atypical safety hazards. FRA's procedural rules on matters such as enforcement (49 CFR parts 209 and 216), and its statutory authority to investigate accidents and injuries and take emergency action to address an imminent hazard of death or injury, would apply to these operations in all cases.

4. Where waivers are granted, a light rail operator would be expected to operate under a system safety plan developed in accordance with the FTA state safety oversight program. The state safety oversight agency would be responsible for the safety oversight of the light rail operation, even on the general system, with regard to aspects of that operation for which a waiver is granted. (The ''Comments'' column of the chart shows ''State Safety Oversight'' where waivers conditioned on such state oversight are likely.) FRA will coordinate with FTA and the state agency to address any serious safety problems. If the conditions under which the waiver was granted change substantially, or unanticipated safety issues arise, FRA may modify or withdraw a waiver in order to ensure safety. On certain subjects where waivers are not likely, the ''Comments'' column of the chart makes special note of some important regulatory requirements that the light rail system will have to observe even if it is not primarily responsible for compliance with that particular rule.

POSSIBLE WAIVERS FOR LIGHT RAIL OPERATIONS ON THE GENERAL RAILROAD SYSTEM BASED ON SEPARATION IN TIME FROM CONVENTIONAL OPERATIONS

Title 49 CFR part	Subject of rule	Likely treatment	Comments
Track, Structures, and Signals			
213	Track safety standards	Comply (assuming light rail operator owns track or has been assigned responsibility for it).	If the conventional RR owns the track, light rail will have to observe speed limits for class of track.
233, 235, 236	Signal and train control	Comply (assuming light rail operator or its contractor has responsibility for signal maintenance).	If conventional RR maintains signals, light rail will have to abide by operational limitations and report signal failures.

POSSIBLE WAIVERS FOR LIGHT RAIL OPERATIONS ON THE GENERAL RAILROAD SYSTEM BASED ON SEPARATION IN TIME FROM CONVENTIONAL OPERATIONS—Continued

Title 49 CFR part	Subject of rule	Likely treatment	Comments
234	Grade crossing signals	Comply (assuming light rail operator or its contractor has responsibility for crossing devices).	If conventional RR maintains devices, light rail will have to comply with sections concerning crossing accidents, activation failures, and false activations.
213, Appendix C	Bridge safety policy	Not a rule. Compliance voluntary..	
Motive Power and Equipment			
210	Noise emission	Waive	State safety oversight.
215	Freight car safety standards.	Waive	State safety oversight.
221	Rear end marking devices.	Waive	State safety oversight.
223	Safety glazing standards.	Waive	State safety oversight.
229	Locomotive safety standards.	Waive, except for arrangement of auxiliary lights, which is important for grade crossing safety.	State safety oversight.
231*	Safety appliance standards.	Waive	State safety oversight; see note below on statutory requirements.
238	Passenger equipment standards.	Waive	State safety oversight.
Operating Practices			
214	Bridge worker	Waive	OSHA standards.
214	Roadway worker safety	Comply.	
217	Operating rules	Waive	State safety oversight.
218	Operating practices	Waive, except for prohibition on tampering with safety devices related to signal system, and blue signal rules on shared track.	State safety oversight.
219	Alcohol and drug	Waive if FTA rule otherwise applies	FTA rule may apply.
220	Radio communications	Waive, except to extent communications with freight trains and roadway workers are necessary.	State safety oversight.
225	Accident reporting and investigation.	Comply with regard to train accidents and crossing accidents; waive as to injuries; FRA accident investigation authority not subject to waiver.	Employee injuries would be reported under FTA or OSHA rules.
228**	Hours of service recordkeeping.	Waive (in concert with waiver of statute); waiver not likely for personnel who dispatch conventional RR or maintain signal system on shared use track.	See note below on possible waiver of statutory requirements.
239	Passenger train emergency preparedness.	Waive	State safety oversight.
240	Engineer certification	Waive	State safety oversight.

* *Safety Appliance Statute.* Certain safety appliance requirements (*e.g.,* automatic couplers) are statutory and can only be waived under the conditions set forth in 49 U.S.C. 20306, which permits exemptions if application of the requirements would ''preclude the development or implementation of more efficient railroad transportation equipment or other transportation innovations.'' If consistent with employee safety, FRA could probably rely on this provision to address most light rail equipment that could not meet the standards.

** *Hours of Service Statute.* Currently, 49 U.S.C. 21108 permits FRA to waive substantive provisions of the hours of service laws based upon a joint petition by the railroad and affected labor organizations, after notice and an opportunity for a hearing. This is a ''pilot project'' provision, so waivers are limited to two years but may be extended for additional two-year periods after notice and an opportunity for comment.

[65 FR 42546, July 10, 2000]

PART 212—STATE SAFETY PARTICIPATION REGULATIONS

Subpart A—General

Sec.
212.1 Purpose and scope.
212.3 Definitions.
212.5 Filing.

Subpart B—State/Federal Roles

212.101 Program principles.
212.103 Investigative and surveillance authority.
212.105 Agreements.
212.107 Certification.
212.109 Joint planning of inspections.
212.111 Monitoring and other inspections.
212.113 Program termination.
212.115 Enforcement actions.

Subpart C—State Inspection Personnel

212.201 General qualifications of State inspection personnel.
212.203 Track inspector.
212.205 Apprentice track inspector.
212.207 Signal and train control inspector.
212.209 Train control inspector.
212.211 Apprentice signal and train control inspector.
212.213 Motive power and equipment (MP&E) inspector.
212.215 Locomotive inspector.
212.217 Car inspector.
212.219 Apprentice MP&E inspector.
212.221 Operating practices inspector.
212.223 Operating practices compliance inspector.
212.225 Apprentice operating practices inspector.
212.227 Hazardous materials inspector.
212.229 Apprentice hazardous materials inspector.
212.231 Highway-rail grade crossing inspector.
212.233 Apprentice highway-rail grade crossing inspector.
212.235 Inapplicable qualification requirements.

AUTHORITY: 49 U.S.C. 20103, 20106, 20105, and 20113 (formerly secs. 202, 205, 206, and 208, of the Federal Railroad Safety Act of 1970, as amended (45 U.S.C. 431, 434, 435, and 436)); and 49 CFR 1.49.

SOURCE: 47 FR 41051, Sept. 16, 1982, unless otherwise noted.

Subpart A—General

§ 212.1 Purpose and scope.

This part establishes standards and procedures for State participation in investigative and surveillance activities under the Federal railroad safety laws and regulations.

§ 212.3 Definitions.

As used in this part:

(a) *Administrator* means the Federal Railroad Administrator or the Deputy Administrator or the delegate of either of them.

(b) *Associate Administrator* means the Associate Administrator for Safety, Federal Railroad Administration (FRA), or the Deputy Associate Administrator for Safety, FRA.

(c) *FRA* means the Federal Railroad Administration.

(d) *Federal railroad safety laws* means the following enactments, together with regulations and orders issued under their authority:

(1) The Federal Railroad Safety Act of 1970, as amended (45 U.S.C. 421, 431–441);

(2) The Safety Appliance Acts, as amended (45 U.S.C. 1–16);

(3) The Locomotive Inspection Act, as amended (45 U.S.C. 22–34);

(4) The Signal Inspection Act, as amended (49 U.S.C. 26);

(5) The Accident Reports Act, as amended (45 U.S.C. 38–42);

(6) The Hours of Service Act, as amended (45 U.S.C. 61–64(b); and

(7) The Hazardous Materials Transportation Act (49 app. U.S.C. 1801 *et seq.*), as it pertains to shipment or transportation by railroad.

(e) *Manufacturer* means a person that manufactures, fabricates, marks, maintains, reconditions, repairs, or tests containers which are represented, marked, certified, or sold for use in the bulk transportation of hazardous materials by railroad.

(f) *Shipper* means a person that offers a hazardous material for transportation or otherwise causes it to be transported.

(g) *Planned compliance inspections* means investigative and surveillance activities described in the annual work plan required by § 212.109 of this part that provide basic surveillance of railroad facilities, equipment and/or operations for the purpose of determining the level of compliance with relevant Federal safety requirements.

[47 FR 41051, Sept. 16, 1982, as amended at 57 FR 28115, June 24, 1992]

§ 212.5 Filing.

Each State agency desiring to conduct investigative and surveillance activities must submit to the Associate Administrator for Safety, Federal Railroad Administration, 400 Seventh Street, SW., Washington, DC 20590, the documentation which contains the information prescribed by §§ 212.105 and 212.107.

Subpart B—State/Federal Roles

§ 212.101 Program principles.

(a) The purpose of the national railroad safety program is to promote safety in all areas of railroad operations in order to reduce deaths, injuries and damage to property resulting from railroad accidents.

(b)(1) The national railroad safety program is carried out in part through the issuance of mandatory Federal safety requirements and through inspection efforts designed to monitor compliance with those requirements. FRA and State inspections determine the extent to which the railroads, shippers, and manufacturers have fulfilled their obligations with respect to inspection, maintenance, training, and supervision. The FRA and participating States do not conduct inspections of track, equipment, signal systems, operating practices, and hazardous materials handling for the railroads, shippers, and manufacturers.

(2) The national railroad safety program is also carried out through routine inspections, accident investigations, formal and informal educational efforts, complaint investigations, safety assessments, special inquiries, regulatory development, research and similar initiatives.

(c) It is the policy of the FRA to maintain direct oversight of railroad, shipper, and manufacturer conditions and practices relevant to safety by conducting inspections and investigations in concert with participating State agencies.

(d) The principal role of the State Safety Participation Program in the national railroad safety effort is to provide an enhanced investigative and surveillance capability through assumption, by participating State agencies, of responsibility for planned routine compliance inspections. The FRA encourages further State contributions to the national railroad safety program consistent with overall program needs, individual State capabilities, and the willingness of the States to undertake additional investigative and surveillance activities.

(e) It is the policy of the FRA to promote the growth and vitality of the State Safety Participation Program through liaison with State government, coordination of Federal and State investigative and surveillance activities, and training of inspection personnel.

[47 FR 41051, Sept. 16, 1982, as amended at 57 FR 28115, June 24, 1992]

§ 212.103 Investigative and surveillance authority.

(a) Subject to the requirements of this part, a State agency with jurisdiction under State law may participate in investigative and surveillance activities concerning Federal railroad safety laws and regulations by entering into an agreement under § 212.105 for the exercise of specified authority.

(b) Subject to requirements of this part, a State agency with jurisdiction under State law may participate in investigative and surveillance activities with respect to particular rules, regulations, orders or standards issued under the regulatory authority of the Federal Railroad Safety Act of 1970 by filing an annual certification under § 212.107.

§ 212.105 Agreements.

(a) *Scope.* The principal method by which States may participate in investigative and surveillance activities is by agreement with FRA. An agreement may delegate investigative and surveillance authority with respect to all or any part of the Federal railroad safety laws.

(b) *Duration.* An agreement may be for a fixed term or for an indefinite duration.

(c) *Amendments.* An agreement may be amended to expand or contract its scope by consent of FRA and the State.

(d) *Common terms.* Each agreement entered into under this section provides that:

(1) The State agency is delegated certain specified authority with respect to investigative and surveillance activities;

(2) The delgation is effective only to the extent it is carried out through personnel recognized by the State and the FRA (pursuant to subpart C of this part) to be qualified to perform the particular investigative and surveillance activities to which the personnel are assigned; and

(3) The State agency agrees to provide the capability necessary to assure coverage of facilities, equipment, and operating practices through planned routine compliance inspections for all, or a specified part of, the territory of the State.

(e) *Request for agreement.* A request for agreement shall contain the following information:

(1) An opinion of the counsel for the State agency stating that:

(i) The agency has jurisdiction over the safety practices of the facilities, equipment, rolling stock, and operations of railroads in that State and whether the agency has jurisdiction over shippers and manufacturers;

(ii) The agency has the authority and capability to conduct investigative and surveillance activities in connection with the rules, regulations, orders, and standards issued by the Administrator under the Federal railroad safety laws; and

(iii) State funds may be used for this purpose.

(2) A statement that the State agency has been furnished a copy of each Federal safety statute, rule, regulation, order, or standard pertinent to the State's participation;

(3) The names of the railroads operating in the State together with the number of miles of main and branch lines operated by each railroad in the State;

(4) The name, title and telephone number of the person designated by the agency to coordinate the program; and

(5) A description of the organization, programs, and functions of the agency with respect to railroad safety.

(f) *Developmental agreement.* Consistent with national program requirements, the Associate Administrator may enter into an agreement under this section prior to the qualification of inspection personnel of the State under subpart C of this part. In such a case, the agreement shall (1) specify the date at which the State will assume investigative and surveillance duties, and (2) refer to any undertaking by the FRA to provide training for State inspection personnel, including a schedule for the training courses that will be made available.

(g) *Action on request.* The Associate Administrator responds to a request for agreement by entering into an agreement based on the request, by declining the request, or by suggesting modifications.

(Approved by the Office of Management and Budget under control number 2130–0509)

[47 FR 41051, Sept. 16, 1982, as amended at 57 FR 28115, June 24, 1992]

§ 212.107 Certification.

(a) *Scope.* In the event the FRA and the State agency do not agree on terms for the participation of the State under § 212.105 of this part and the State wishes to engage in investigative and surveillance activities with respect to any rule, regulation, order, or standard issued under the authority of the Federal Railroad Safety Act of 1970, the State shall file an annual certification with respect to such activities.

(b) *Content.* The annual certification shall be filed not less than 60 days before the beginning of the Federal fiscal year to which it applies, shall contain the information required by § 212.105(e) of this part and, in addition, shall certify that:

(1) The State agency has the authority and capability to conduct investigative and surveillance activities under the requirements of this part with respect to each rule, regulation, order or standard for which certification is submitted; and

(2) The State agency will, at a minimum, conduct planned compliance inspections meeting the level of effort prescribed in the applicable appendix to this part.

(c) *Action on certification.* The Associate Administrator responds to the filing of an annual certification within 60 days of its receipt by accepting it or by rejecting it for cause stated.

(d) *Delegation of authority.* Acceptance of an annual certification constitutes a delegation of authority to conduct investigative and surveillance activities only to the extent that the delegation is carried out through personnel recognized by the State and the FRA (pursuant to subpart C of this part) to be qualified to perform the particular investigative and surveillance activities to which the personnel are assigned.

(Approved by the Office of Management and Budget under control number 2130–0509)

§212.109 Joint planning of inspections.

Prior to the beginning of each calendar year, each participating State applying for grant assistance under subpart D of this part shall develop, in conjunction with the FRA Regional Director of the region in which the State is located, an annual work plan for the conduct of investigative and surveillance activities by the State agency. The plan shall include a program of inspections designed to monitor the compliance of the railroads, shippers, and manufacturers operating within the State (or portion thereof) with applicable Federal railroad safety laws and regulations. In the event the participating State and the FRA Regional Director cannot agree on an annual work plan, the Associate Administrator for Safety shall review the matter.

(Approved by the Office of Management and Budget under control number 2130–0509)

[57 FR 28115, June 24, 1992]

§212.111 Monitoring and other inspections.

(a) It is the policy of the FRA to monitor State investigative and surveillance practices at the program level.

(b) It is the policy of the FRA to coordinate its direct inspection and investigative functions in participating States with the responsible State agency, providing prior advice to the States whenever practicable.

(c) The FRA may conduct such monitoring of State investigative and surveillance practices and such other inspection and investigation as may be necessary to aid in the enforcement of the Federal railroad safety laws.

§212.113 Program termination.

(a) A State agency participating in investigative and surveillance activities by agreement or certification shall provide thirty (30) days notice of its intent to terminate its participation.

(b) The Administrator may, on his own initiative, terminate the participation of a State agency if, after at least thirty (30) days notice an opportunity for oral hearing under section 553 of title 5 U.S.C., the State agency does not establish that it has complied and is complying with:

(1) The requirements of this part;

(2) Relevant directives, enforcement manuals, and written interpretations of law and regulations provided by the FRA for guidance of the program; and

(3) The rule of national uniformity of laws, rules, regulations, orders, and standards relating to railroad safety as expressed in section 205 of the Federal Railroad Safety Act of 1970 (45 U.S.C. 434).

§212.115 Enforcement actions.

(a) Except as provided in paragraph (b) of this section, the FRA reserves exclusive authority to assess and compromise penalties, to issue emergency orders and compliance orders, institute or cause to be instituted actions for collection of civil penalties or for injunctive relief, and to commence any and all other enforcement actions under the Federal railroad safety laws.

(b)(1) Section 207(a) of the Federal Railroad Safety Act of 1970, as amended (45 U.S.C. 436(a)), authorizes a participating State to bring an action for assessment and collection of a civil penalty in a Federal district court of proper venue, if the FRA has not acted on a request for civil penalty assessment originated by the State, within sixty (60) days of receipt, by assessing the penalty or by determining in writing that no violation occurred.

(2) Section 207(b) of the Federal Railroad Safety Act of 1970, as amended (45 U.S.C. 436(b)), authorizes a participating State to bring an action for injunctive relief in a Federal district court of proper venue, if the FRA has not acted on a request to initiate such

an action within fifteen (15) days of receipt, by referring the matter to the Attorney General for litigation, by undertaking other enforcement action, or by determining in writing that no violation has occurred.

(3) For purposes of this paragraph, a request for legal action is deemed to be received when a legally sufficient investigative report specifying the action requested is received by the designated FRA offices.

(c)(1) Requests for civil penalty assessments and other administrative actions shall be submitted to the FRA Regional Director for Railroad Safety for the FRA region in which the State is located.

(2) Requests for the institution of injunctive actions shall be submitted simultaneously to (i) the FRA Regional Director for Railroad Safety for the FRA region in which the State is located and (ii) the Enforcement Division, Office of Chief Counsel, FRA, Washington, DC 20590.

Subpart C—State Inspection Personnel

§ 212.201 General qualifications of State inspection personnel.

(a) This subpart prescribes the minimum qualification requirements for State railroad safety inspectors, compliance inspectors and inspector apprentices. A State agency may establish more stringent or additional requirements for its employees.

(b) An inspector, compliance inspector, or apprentice inspector shall be recognized as qualified under this part by the State agency and the Associate Administrator prior to assuming the responsibilities of the position.

(c) Each inspector, compliance inspectors and apprentice inspector shall be a bona fide employee of the State agency.

(d) Each inspector, compliance inspector, and apprentice inspector shall demonstrate:

(1) The ability to read and comprehend written materials such as training and enforcement manuals, regulations, operating and safety rules of the railroad, and similar materials;

(2) The ability to compose narrative reports of investigative findings that are clear, complete, and grammatically acceptable;

(3) The ability to record data on standard report forms with a high degree of accuracy;

(4) The ability to communicate orally; and

(5) Basic knowledge of rail transportation functions, the organization of railroad, shipper, and manufacturer companies, and standard industry rules for personal safety.

(e) Each inspector shall demonstrate a thorough knowledge of:

(1) Railroad rules, practices, record systems, and terminology common to operating and maintenance functions; and

(2) The scope and major requirements of all of the Federal railroad safety laws and regulations.

(f) In addition to meeting the requirements of this section, each inspector and apprentice inspector shall meet the applicable requirements of §§ 212.203 through 212.229 of this subpart.

[47 FR 41051, Sept. 16, 1982, as amended at 57 FR 28115, June 24, 1992]

§ 212.203 Track inspector.

(a) The track inspector is required, at a minimum, to be able to conduct independent inspections of track structures for the purpose of determining compliance with the Track Safety Standards (49 CFR part 213), to make reports of those inspections, and to recommend the institution of enforcement actions when appropriate to promote compliance.

(b) The track inspector is required, at a minimum to have at least four years of recent experience in track construction or maintenance. A bachelor's degree in engineering or a related technical specialization may be substituted for two of the four years of this experience requirement and successful completion of the apprentice training program may be substituted for the four years of this experience requirement.

(c) The track inspector shall demonstrate the following specific qualifications:

(1) A comprehensive knowledge of track nomenclature, track inspection techniques, track maintenance methods, and track equipment;

(2) The ability to understand and detect deviations from:

(i) Track maintenance standards accepted in the industry; and

(ii) The Track Safety Standards (49 CFR part 213).

(3) Knowledge of operating practices and vehicle/track interaction sufficient to understand the safety significance of deviations and combinations of deviations; and

(4) Specialized knowledge of the requirements of the Track Safety Standards, including the remedial action required to bring defective track into compliance with the standards.

§ 212.205 Apprentice track inspector.

(a) The apprentice track inspector must be enrolled in a program of training prescribed by the Associate Administrator leading to qualification as a track inspector. The apprentice track inspector may not participate in investigative and surveillance activities, except as an assistant to a qualified State or FRA inspector while accompanying that qualified inspector.

(b) An apprentice track inspector shall demonstrate basic knowledge of track inspection techniques, track maintenance methods, and track equipment prior to being enrolled in the program.

§ 212.207 Signal and train control inspector.

(a) The signal and train control inspector is required, at a minimum, to be able to conduct independent inspections of all types of signal and train control systems for the purpose of determining compliance with the Rules, Standards and Instructions for Railroad Signal Systems (49 CFR part 236), to make reports of those inspections, and to recommend the institution of enforcement actions when appropriate to promote compliance.

(b) The signal and train inspector is required, at a minimum, to have at least four years of recent experience in signal construction or maintenance. A bachelor's degree in electrical engineering or a related technical specialization may be substituted for two of the four years of this experience requirement and successful completion of the apprentice training program may be substituted for the four years of this requirement.

(c) The signal and train control inspector shall demonstrate the following specific qualifications:

(1) A comprehensive knowledge of signal and train control systems, maintenance practices, test and inspection techniques;

(2) The ability to understand and detect deviations from:

(i) Signal and train control maintenance standards accepted in the industry; and

(ii) The Rules, Standards and Instructions for Railroad Signal Systems (49 CFR part 236).

(3) The ability to examine plans and records, to make inspections of signal train control systems and to determine adequacy of stopping distances from prescribed speeds;

(4) Knowledge of operating practices and signal systems sufficient to understand the safety significance of deviations and combination of deviations; and

(5) Specialized knowledge of the requirements of the Rules, Standards and Instructions for Railroad Signal Systems, including the remedial action required to bring signal and train control systems into compliance with the standards.

§ 212.209 Train control inspector.

(a) The train control inspector is required, at a minimum, to be able to conduct independent inspections of automatic cab signal, automatic train stop, and automatic train control devices on board locomotives for the purpose of determining compliance with subpart E of the Rules, Standards and Instructions for Railroad Signal Systems (49 CFR part 236) and to recommend the institution of enforcement action when appropriate to promote compliance.

(b) The train control inspector is required, at a minimum, to have at least four years of recent experience in locomotive construction or maintenance. A bachelor's degree in electrical engineering or a related technical specialization may be substituted for two of the four years of this experience requirement and successful completion of the apprentice training program may

be substituted for the four year experience requirement.

(c) The train control inspector shall demonstrate the following specific qualifications:

(1) A comprehensive knowledge of the various train control systems used on board locomotives, locomotive air brake systems and test and inspection procedures;

(2) The ability to understand and detect deviations from:

(i) Train control maintenance standards accepted in the industry; and

(ii) Subpart E of the Rules, Standards and Instructions for Railroad Signal Systems (49 CFR part 236);

(3) Knowledge of operating practices and train control systems sufficient to understand the safety significance of deviations and combinations of deviations; and

(4) Specialized knowledge of the requirements of subpart E of the Rules, Standards and Instructions for Railroad Signal Systems, including the remedial action required to bring train control systems used on board locomotives into compliance with the standards.

§ 212.211 Apprentice signal and train control inspector.

(a) The apprentice signal and train control inspector must be enrolled in a program of training prescribed by the Associate Administrator leading to qualification as a signal and train control inspector. The apprentice inspector may not participate in the investigative and surveillance activities, except as an assistant to a qualified State or FRA inspector while accompanying that qualified inspector.

(b) Prior to being enrolled in the program the apprentice inspector shall demonstrate:

(1) Working knowledge of basic electricity and the ability to use electrical test equipment in direct current and alternating current circuits; and

(2) A basic knowledge of signal and train control inspection and maintenance methods and procedures.

§ 212.213 Motive power and equipment (MP&E) inspector.

(a) The MP&E inspector is required, at a minimum, to be able to conduct independent inspections of railroad equipment for the purpose of determining compliance with all sections of the Freight Car Safety Standards (49 CFR part 215), Safety Glazing Standards (49 CFR part 223), Locomotive Safety Standards (49 CFR part 229), Safety Appliance Standards (49 CFR part 231), and Power Brake Standards (49 CFR part 232), to make reports of those inspections and to recommend the institution of enforcement actions when appropriate to promote compliance.

(b) The MP&E inspector is required, at a minimum, to have at least four years of recent experience in the construction or maintenance of railroad rolling equipment. A bachelor's degree in engineering or a related technical specialization may be substituted for two of the four years of this experience requirement and successful completion of the apprentice training program may be substituted for the four year experience requirement.

(c) The MP&E inspector shall demonstrate the following qualifications:

(1) A comprehensive knowledge of construction, testing, inspecting and repair of railroad freight cars, passenger cars, locomotives and air brakes;

(2) The ability to understand and detect deviations from:

(i) Railroad equipment maintenance standards accepted in the industry; and

(ii) The Freight Car Safety Standards, Safety Glazing Standards, Locomotive Safety Standards, Safety Appliance Standards and Power Brake Standards.

(3) The knowledge of railroad operating procedures associated with the operation of freight cars, passenger cars, locomotives and air brakes sufficient to understand the safety significance of deviations and combinations of deviations; and

(4) Specialized knowledge of proper remedial action to be taken in order to bring defective freight cars, passenger cars, locomotives, and air brakes into compliance with applicable Federal standards.

§ 212.215 Locomotive inspector.

(a) The locomotive inspector is required, at a minimum, to be able to

conduct independent inspections of locomotives and air brake systems for the purpose of determining compliance with applicable sections of the Safety Glazing Standards (49 CFR part 223), Locomotive Safety Standards (49 CFR part 229), Safety Appliance Standards (49 CFR part 231) and Power Brake Standards (49 CFR part 232), to make reports of those inspections and to recommend the institution of enforcement actions when appropriate to promote compliance.

(b) The locomotive inspector is required, at a minimum, to have at least four years of experience in locomotive construction or maintenance. A bachelor's degree in mechanical engineering or a related technical specialization may be substituted for two of the four years of this experience requirement and successful completion of the apprentice training program may be substituted for the four year experience requirement.

(c) The locomotive inspector shall demonstrate the following specific qualifications:

(1) A comprehensive knowledge of construction, testing, inspecting and repair of locomotive and air brakes;

(2) The ability to understand and detect deviations from:

(i) Railroad equipment maintenance standards accepted in the industry; and

(ii) Safety Glazing Standards, Locomotive Safety Standards, Safety Appliance Standards and Power Brake Standards;

(3) The knowledge of railroad operating procedures associated with the operation of locomotives and air brakes sufficient to understand the safety significance of deviations and combinations of deviations; and

(4) Specialized knowledge of proper remedial action to be taken in order to bring defective locomotives, and air brakes into compliance with applicable Federal standards.

§ 212.217 Car inspector.

(a) The car inspector is required, at a minimum, to be able to conduct independent inspections of railroad rolling stock for the purpose of determining compliance with all sections of the Freight Car Safety Standards (49 CFR part 215), Safety Glazing Standards (49 CFR part 223), Safety Appliance Standards (49 CFR part 231) and Power Brake Standards (49 CFR part 232), to make reports of those inspections and to recommend the institution of enforcement actions when appropriate to promote compliance.

(b) The car inspector is required, at a minimum, to have at least two years of recent experience in freight car or passenger car construction, maintenance or inspection. Successful completion of the apprentice training program may be substituted for this two year experience requirement.

(c) The car inspector shall demonstrate the following specific qualifications:

(1) A comprehensive knowledge of the construction and testing of freight and passenger cars and air brakes;

(2) The ability to understand and detect deviations from:

(i) Railroad freight and passenger car maintenance standards accepted in the industry; and

(ii) The Freight Car Safety Standards (49 CFR part 215), Safety Glazing Standards (49 CFR part 223), Safety Appliance Standards (49 CFR part 231) and Power Brake Standards (49 CFR part 232);

(3) The knowledge of railroad operating procedures associated with the operation of freight and passenger cars and air brakes sufficient to understand the safety significance of deviations and combinations of deviations; and

(4) Specialized knowledge of proper remedial action to be taken in order to bring defective freight and passenger car equipment and air brakes into compliance with applicable Federal standards.

§ 212.219 Apprentice MP&E inspector.

(a) The apprentice MP&E inspector must be enrolled in a program of training prescribed by the Associate Administrator leading to qualification as an MP&E inspector. The apprentice may not participate in investigative and surveillance activities, except as an assistant to a qualified State or FRA inspector while accompanying that qualified inspector.

(b) An apprentice MP&E inspector shall demonstrate basic knowledge of

railroad equipment and air brake inspection, testing and maintenance, prior to being enrolled in the program.

§ 212.221 Operating practices inspector.

(a) The operating practices inspector is required, at a minimum, to be able to conduct independent inspections for the purpose of determining compliance with all sections of the Federal operating practice regulations (49 CFR parts 217, 218, 219, 220, 221, 225 and 228) and the Hours of Service Act (45 U.S.C. 61–64b), to make reports of those inspections, and to recommend the institution of enforcement actions when appropriate to promote compliance.

(b) The operating practices inspector is required at a minimum to have at least four years of recent experience in developing or administering railroad operating rules. Successful completion of the apprentice training program may be substituted for this four year experience requirement.

(c) The operating practices inspector shall demonstrate the following specific qualifications:

(1) A comprehensive knowledge of railroad operating practices, railroad operating rules, duties of railroad employees, and general railroad nomenclature;

(2) The ability to understand and detect deviations from:

(i) Railroad operating rules accepted in the industry; and

(ii) Federal operating practice regulations;

(3) Knowledge of operating practices and rules sufficient to understand the safety significance of deviations; and

(4) Specialized knowledge of the requirements of the Federal operating practices regulations listed in paragraph (a) of this section, including the remedial action required to bring railroad operations into compliance with the regulations.

[47 FR 41051, Sept. 16, 1982, as amended at 50 FR 31578, Aug. 2, 1985]

§ 212.223 Operating practices compliance inspector.

(a) The operating practices compliance inspector is required, at a minimum, to be able to conduct independent inspections for the purpose of determining compliance with the requirements of the following:

(1) Operating Rules—blue flag (49 CFR part 218);

(2) Control of Alcohol and Drug Use (49 CFR part 219);

(3) Rear End Marking Device Regulations (49 CFR part 221);

(4) Railroad accidents/incidents: reports classification and investigations (49 CFR part 225); and

(5) Hours of Service Act (45 U.S.C. 61–64b) and implementing regulations (49 CFR part 228); to make reports of those inspections and to recommend the institution of enforcement actions when appropriate to promote compliance.

(b) The operating practices compliance inspector is required, at a minimum, to have at least two years of recent experience in developing or administering railroad operating rules. Successful completion of the apprentice training program may be substituted for the two year experience requirement.

(c) The compliance inspector shall demonstrate the following specific qualifications.

(1) A basic knowledge of railroad operations, duties of railroad employees and general railroad safety as it relates to the protection of railroad employees;

(2) A basic knowledge of railroad rules and practices;

(3) The ability to understand and detect deviations from the requirements cited in paragraph (a) of this section; and

(4) Specialized knowledge of the requirements of the Federal operating practices regulations listed in paragraph (a) of this section, including the remedial action required to bring defective conditions into compliance with the applicable Federal standards.

[47 FR 41051, Sept. 16, 1982, as amended at 50 FR 31578, Aug. 2, 1985]

§ 212.225 Apprentice operating practices inspector.

(a) The apprentice operating practices inspector must be enrolled in a program of training prescribed by the Associate Administrator leading to qualification as an inspector. The apprentice inspector may not participate

in investigative and surveillance activities, except as an assistant to a qualified State or FRA inspector while accompanying that qualified inspector.

(b) An apprentice operating practices inspector shall demonstrate basic knowledge of railroad operating practices, railroad operating rules and general duties of railroad employees prior to being enrolled in the program.

§ 212.227 Hazardous materials inspector.

(a) The hazardous materials inspector is required, at a minimum, to be able to conduct independent inspections to determine compliance with all pertinent sections of the Federal hazardous materials regulations (49 CFR parts 171 through 174, and 179), to make reports of those inspections and findings, and to recommend the institution of enforcement actions when appropriate to promote compliance.

(b) The hazardous materials inspector is required, at a minimum, to have at least two years of recent experience in developing, administering, or performing managerial functions related to compliance with the hazardous materials regulations; four years of recent experience in performing functions related to compliance with the hazardous materials regulations; or a bachelor's degree in a related technical specialization. Successful completion of the apprentice training program may be substituted for this requirement.

(c) The hazardous materials inspector shall demonstrate the following specific qualifications:

(1) A comprehensive knowledge of the transportation and operating procedures employed in the railroad, shipping, or manufacturing industries associated with the transportation of hazardous materials;

(2) Knowledge and ability to understand and detect deviations from the Department of Transportation's Hazardous Materials Regulations, including Federal requirements and industry standards for the manufacturing of bulk packaging used in the transportation of hazardous materials by railroad;

(3) Knowledge of the physical and chemical properties and chemical hazards associated with hazardous materials that are transported by railroad;

(4) Knowledge of the proper remedial actions required to bring railroad, shipper, and/or manufacturing facilities into compliance with the Federal regulations; and

(5) Knowledge of the proper remedial actions required when a hazardous materials transportation accident or incident occurs.

[57 FR 28115, June 24, 1992]

§ 212.229 Apprentice hazardous materials inspector.

(a) The apprentice hazardous materials inspector must be enrolled in a program of training prescribed by the Associate Administrator for Safety leading to qualification as a hazardous materials inspector. The apprentice may not participate in investigative and surveillance activities, except as an assistant to a qualified State or FRA inspector while accompanying that qualified inspector.

(b) An apprentice hazardous materials inspector shall demonstrate a basic knowledge of the chemical hazards associated with hazardous materials that are transported by railroad, including requirements such as shipping papers, marking, labeling, placarding, and the manufacturing and maintenance of packagings associated with these shipments.

[57 FR 28116, June 24, 1992]

§ 212.231 Highway-rail grade crossing inspector.

(a) The highway-rail grade crossing inspector is required, at a minimum, to be able to conduct independent inspections of all types of highway-rail grade crossing warning systems for the purpose of determining compliance with Grade Crossing Signal System Safety Rules (49 CFR part 234), to make reports of those inspections, and to recommend institution of enforcement actions when appropriate to promote compliance.

(b) The highway-rail grade crossing inspector is required, at a minimum, to have at least four years of recent experience in highway-rail grade crossing

construction or maintenance. A bachelor's degree in engineering or a related technical specialization may be substituted for two of the four years of this experience requirement. Successful completion of an apprentice training program under § 212.233 may be substituted for the four years of this experience requirement.

(c) The highway-rail grade crossing inspector shall demonstrate the following specific qualifications:

(1) A comprehensive knowledge of highway-rail grade crossing nomenclature, inspection techniques, maintenance requirements, and methods;

(2) The ability to understand and detect deviations from:

(i) Grade crossing signal system maintenance, inspection and testing standards accepted in the industry; and

(ii) The Grade Crossing Signal System Safety Rules (49 CFR part 234);

(3) Knowledge of operating practices and highway-rail grade crossing systems sufficient to understand the safety significance of deviations and combinations of deviations from § 212.231(c)(2) (i) and (ii);

(4) Specialized knowledge of the requirements of the Grade Crossing Signal System Safety Rules (49 CFR part 234), including the remedial action required to bring highway-rail grade crossing signal systems into compliance with those Rules;

(5) Specialized knowledge of highway-rail grade crossing standards contained in the Manual on Uniform Traffic Control Devices; and

(6) Knowledge of railroad signal systems sufficient to ensure that highway-rail grade crossing warning systems and inspections of those systems do not adversely affect the safety of railroad signal systems.

(d) A State signal and train control inspector qualified under this part and who has demonstrated the ability to understand and detect deviations from the Grade Crossing Signal System Safety Rules (49 CFR part 234) is deemed to meet all requirements of this section and is qualified to conduct independent inspections of all types of highway-rail grade crossing warning systems for the purpose of determining compliance with Grade Crossing Signal System Safety Rules (49 CFR part 234), to make reports of those inspections, and to recommend institution of enforcement actions when appropriate to promote compliance.

[59 FR 50104, Sept. 30, 1994]

§ 212.233 Apprentice highway-rail grade crossing inspector.

(a) An apprentice highway-rail grade crossing inspector shall be enrolled in a program of training prescribed by the Associate Administrator for Safety leading to qualification as a highway-rail grade crossing inspector. The apprentice inspector may not participate in investigative and surveillance activities, except as an assistant to a qualified State or FRA inspector while accompanying that qualified inspector.

(b) Prior to being enrolled in the program the apprentice inspector shall demonstrate:

(1) Working basic knowledge of electricity;

(2) The ability to use electrical test equipment in direct current and alternating current circuits; and

(3) A basic knowledge of highway-rail grade crossing inspection and maintenance methods and procedures.

[59 FR 50104, Sept. 30, 1994]

§ 212.235 Inapplicable qualification requirements.

The Associate Administrator may determine that a specific requirement of this subpart is inapplicable to an identified position created by a State agency if it is not relevant to the actual duties of the position. The determination is made in writing.

[47 FR 41051, Sept. 16, 1982. Redesignated at 57 FR 28115, June 24, 1992. Further redesignated at 59 FR 50104, Sept. 30, 1994]

PART 213—TRACK SAFETY STANDARDS

Subpart A—General

Sec.

213.1 Scope of part.
213.2 Preemptive effect.
213.3 Application.
213.4 Excepted track.
213.5 Responsibility for compliance.
213.7 Designation of qualified persons to supervise certain renewals and inspect track.

213.9 Classes of track: operating speed limits.
213.11 Restoration or renewal of track under traffic conditions.
213.13 Measuring track not under load.
213.15 Penalties.
213.17 Waivers.
213.19 Information collection.

Subpart B—Roadbed

213.31 Scope.
213.33 Drainage.
213.37 Vegetation.

Subpart C—Track Geometry

213.51 Scope.
213.53 Gage.
213.55 Alinement.
213.57 Curves; elevation and speed limitations.
213.59 Elevation of curved track; runoff.
213.63 Track surface.

Subpart D—Track Structure

213.101 Scope.
213.103 Ballast; general.
213.109 Crossties.
213.110 Gage restraint measurement systems.
213.113 Defective rails.
213.115 Rail end mismatch.
213.119 Continuous welded rail (CWR); general.
213.121 Rail joints.
213.122 Torch cut rail.
213.123 Tie plates.
213.127 Rail fastening systems.
213.133 Turnouts and track crossings generally.
213.135 Switches.
213.137 Frogs.
213.139 Spring rail frogs.
213.141 Self-guarded frogs.
213.143 Frog guard rails and guard faces; gage.

Subpart E—Track Appliances and Track-Related Devices

213.201 Scope.
213.205 Derails

Subpart F—Inspection

213.231 Scope.
213.233 Track inspections.
213.235 Inspection of switches, track crossings, and lift rail assemblies or other transition devices on moveable bridges.
213.237 Inspection of rail.
213.239 Special inspections.
213.241 Inspection records.

Subpart G—Train Operations at Track Classes 6 and Higher

213.301 Scope of subpart.
213.303 Responsibility for compliance.
213.305 Designation of qualified individuals; general qualifications.
213.307 Class of track: operating speed limits.
213.309 Restoration or renewal of track under traffic conditions.
213.311 Measuring track not under load.
213.317 Waivers.
213.319 Drainage.
213.321 Vegetation.
213.323 Track gage.
213.327 Alinement.
213.329 Curves, elevation and speed limitations.
213.331 Track surface.
213.333 Automated vehicle inspection systems.
213.334 Ballast; general.
213.335 Crossties.
213.337 Defective rails.
213.339 Inspection of rail in service.
213.341 Initial inspection of new rail and welds.
213.343 Continuous welded rail (CWR).
213.345 Vehicle qualification testing.
213.347 Automotive or railroad crossings at grade.
213.349 Rail end mismatch.
213.351 Rail joints.
213.352 Torch cut rail.
213.353 Turnouts, crossovers, and lift rail assemblies or other transition devices on moveable bridges.
213.355 Frog guard rails and guard faces; gage.
213.357 Derails.
213.359 Track stiffness.
213.361 Right of way.
213.365 Visual inspections.
213.367 Special inspections.
213.369 Inspection records.

APPENDIX A TO PART 213—MAXIMUM ALLOWABLE CURVING SPEEDS
APPENDIX B TO PART 213—SCHEDULE OF CIVIL PENALTIES
APPENDIX C TO PART 213—STATEMENT OF AGENCY POLICY ON THE SAFETY OF RAILROAD BRIDGES

AUTHORITY: 49 U.S.C. 20102–20114 and 20142; 28 U.S.C. 2461, note; and 49 CFR 1.49(m).

SOURCE: 63 FR 34029, June 22, 1998, unless otherwise noted.

Subpart A—General

§213.1 Scope of part.

(a) This part prescribes minimum safety requirements for railroad track

that is part of the general railroad system of transportation. The requirements prescribed in this part apply to specific track conditions existing in isolation. Therefore, a combination of track conditions, none of which individually amounts to a deviation from the requirements in this part, may require remedial action to provide for safe operations over that track. This part does not restrict a railroad from adopting and enforcing additional or more stringent requirements not inconsistent with this part.

(b) Subparts A through F apply to track Classes 1 through 5. Subpart G and 213.2, 213.3, and 213.15 apply to track over which trains are operated at speeds in excess of those permitted over Class 5 track.

§ 213.2 Preemptive effect.

Under 49 U.S.C. 20106, issuance of these regulations preempts any State law, regulation, or order covering the same subject matter, except an additional or more stringent law, regulation, or order that is necessary to eliminate or reduce an essentially local safety hazard; is not incompatible with a law, regulation, or order of the United States Government; and that does not impose an unreasonable burden on interstate commerce.

§ 213.3 Application.

(a) Except as provided in paragraph (b) of this section, this part applies to all standard gage track in the general railroad system of transportation.

(b) This part does not apply to track—

(1) Located inside an installation which is not part of the general railroad system of transportation; or

(2) Used exclusively for rapid transit operations in an urban area that are not connected with the general railroad system of transportation.

§ 213.4 Excepted track.

A track owner may designate a segment of track as excepted track provided that—

(a) The segment is identified in the timetable, special instructions, general order, or other appropriate records which are available for inspection during regular business hours;

(b) The identified segment is not located within 30 feet of an adjacent track which can be subjected to simultaneous use at speeds in excess of 10 miles per hour;

(c) The identified segment is inspected in accordance with 213.233(c) and 213.235 at the frequency specified for Class 1 track;

(d) The identified segment of track is not located on a bridge including the track approaching the bridge for 100 feet on either side, or located on a public street or highway, if railroad cars containing commodities required to be placarded by the Hazardous Materials Regulations (49 CFR part 172), are moved over the track; and

(e) The railroad conducts operations on the identified segment under the following conditions:

(1) No train shall be operated at speeds in excess of 10 miles per hour;

(2) No occupied passenger train shall be operated;

(3) No freight train shall be operated that contains more than five cars required to be placarded by the Hazardous Materials Regulations (49 CFR part 172); and

(4) The gage on excepted track shall not be more than 4 feet 10¼ inches. This paragraph (e)(4) is applicable September 21, 1999.

(f) A track owner shall advise the appropriate FRA Regional Office at least 10 days prior to removal of a segment of track from excepted status.

[63 FR 34029, June 22, 1998]

§ 213.5 Responsibility for compliance.

(a) Except as provided in paragraph (b) of this section, any owner of track to which this part applies who knows or has notice that the track does not comply with the requirements of this part, shall—

(1) Bring the track into compliance;

(2) Halt operations over that track; or

(3) Operate under authority of a person designated under § 213.7(a), who has at least one year of supervisory experience in railroad track maintenance, subject to conditions set forth in this part.

(b) If an owner of track to which this part applies designates a segment of track as ''excepted track'' under the

provisions of §213.4, operations may continue over that track without complying with the provisions of subparts B, C, D, and E of this part, unless otherwise expressly stated.

(c) If an owner of track to which this part applies assigns responsibility for the track to another person (by lease or otherwise), written notification of the assignment shall be provided to the appropriate FRA Regional Office at least 30 days in advance of the assignment. The notification may be made by any party to that assignment, but shall be in writing and include the following—

(1) The name and address of the track owner;

(2) The name and address of the person to whom responsibility is assigned (assignee);

(3) A statement of the exact relationship between the track owner and the assignee;

(4) A precise identification of the track;

(5) A statement as to the competence and ability of the assignee to carry out the duties of the track owner under this part; and

(6) A statement signed by the assignee acknowledging the assignment to him of responsibility for purposes of compliance with this part.

(d) The Administrator may hold the track owner or the assignee or both responsible for compliance with this part and subject to penalties under §213.15.

(e) A common carrier by railroad which is directed by the Surface Transportation Board to provide service over the track of another railroad under 49 U.S.C. 11123 is considered the owner of that track for the purposes of the application of this part during the period the directed service order remains in effect.

(f) When any person, including a contractor for a railroad or track owner, performs any function required by this part, that person is required to perform that function in accordance with this part.

§213.7 Designation of qualified persons to supervise certain renewals and inspect track.

(a) Each track owner to which this part applies shall designate qualified persons to supervise restorations and renewals of track under traffic conditions. Each person designated shall have—

(1) At least—

(i) 1 year of supervisory experience in railroad track maintenance; or

(ii) A combination of supervisory experience in track maintenance and training from a course in track maintenance or from a college level educational program related to track maintenance;

(2) Demonstrated to the owner that he or she—

(i) Knows and understands the requirements of this part;

(ii) Can detect deviations from those requirements; and

(iii) Can prescribe appropriate remedial action to correct or safely compensate for those deviations; and

(3) Written authorization from the track owner to prescribe remedial actions to correct or safely compensate for deviations from the requirements in this part.

(b) Each track owner to which this part applies shall designate qualified persons to inspect track for defects. Each person designated shall have—

(1) At least—

(i) 1 year of experience in railroad track inspection; or

(ii) A combination of experience in track inspection and training from a course in track inspection or from a college level educational program related to track inspection;

(2) Demonstrated to the owner that he or she—

(i) Knows and understands the requirements of this part;

(ii) Can detect deviations from those requirements; and

(iii) Can prescribe appropriate remedial action to correct or safely compensate for those deviations; and

(3) Written authorization from the track owner to prescribe remedial actions to correct or safely compensate for deviations from the requirements of this part, pending review by a qualified person designated under paragraph (a) of this section.

(c) Persons not fully qualified to supervise certain renewals and inspect track as outlined in paragraphs (a) and (b) of this section, but with at least one

year of maintenance-of-way or signal experience, may pass trains over broken rails and pull aparts provided that—

(1) The track owner determines the person to be qualified and, as part of doing so, trains, examines, and re-examines the person periodically within two years after each prior examination on the following topics as they relate to the safe passage of trains over broken rails or pull aparts: rail defect identification, crosstie condition, track surface and alinement, gage restraint, rail end mismatch, joint bars, and maximum distance between rail ends over which trains may be allowed to pass. The sole purpose of the examination is to ascertain the person's ability to effectively apply these requirements and the examination may not be used to disqualify the person from other duties. A minimum of four hours training is adequate for initial training;

(2) The person deems it safe and train speeds are limited to a maximum of 10 m.p.h. over the broken rail or pull apart;

(3) The person shall watch all movements over the broken rail or pull apart and be prepared to stop the train if necessary; and

(4) Person(s) fully qualified under § 213.7 of this part are notified and dispatched to the location promptly for the purpose of authorizing movements and effecting temporary or permanent repairs.

(d) With respect to designations under paragraphs (a), (b), and (c) of this section, each track owner shall maintain written records of—

(1) Each designation in effect;

(2) The basis for each designation; and

(3) Track inspections made by each designated qualified person as required by § 213.241. These records shall be kept available for inspection or copying by the Federal Railroad Administration during regular business hours.

§ 213.9 Classes of track: operating speed limits.

(a) Except as provided in paragraph (b) of this section and §§ 213.57(b), 213.59(a), 213.113(a), and 213.137(b) and (c), the following maximum allowable operating speeds apply—

[In miles per hour]

Over track that meets all of the requirements prescribed in this part for—	The maximum allowable operating speed for freight trains is—	The maximum allowable operating speed for passenger trains is—
Excepted track	10	N/A
Class 1 track	10	15
Class 2 track	25	30
Class 3 track	40	60
Class 4 track	60	80
Class 5 track	80	90

(b) If a segment of track does not meet all of the requirements for its intended class, it is reclassified to the next lowest class of track for which it does meet all of the requirements of this part. However, if the segment of track does not at least meet the requirements for Class 1 track, operations may continue at Class 1 speeds for a period of not more than 30 days without bringing the track into compliance, under the authority of a person designated under § 213.7(a), who has at least one year of supervisory experience in railroad track maintenance, after that person determines that operations may safely continue and subject to any limiting conditions specified by such person.

§ 213.11 Restoration or renewal of track under traffic conditions.

If during a period of restoration or renewal, track is under traffic conditions and does not meet all of the requirements prescribed in this part, the work on the track shall be under the continuous supervision of a person designated under § 213.7(a) who has at least one year of supervisory experience in

railroad track maintenance, and subject to any limiting conditions specified by such person. The term ''continuous supervision'' as used in this section means the physical presence of that person at a job site. However, since the work may be performed over a large area, it is not necessary that each phase of the work be done under the visual supervision of that person.

§ 213.13 Measuring track not under load.

When unloaded track is measured to determine compliance with requirements of this part, the amount of rail movement, if any, that occurs while the track is loaded must be added to the measurements of the unloaded track.

§ 213.15 Penalties.

(a) Any person who violates any requirement of this part or causes the violation of any such requirement is subject to a civil penalty of at least $550 and not more than $16,000 per violation, except that: Penalties may be assessed against individuals only for willful violations, and, where a grossly negligent violation or a pattern of repeated violations has created an imminent hazard of death or injury to persons, or has caused death or injury, a penalty not to exceed $27,000 per violation may be assessed. ''Person'' means an entity of any type covered under 1 U.S.C. 1, including but not limited to the following: a railroad; a manager, supervisor, official, or other employee or agent of a railroad; any owner, manufacturer, lessor, or lessee of railroad equipment, track, or facilities; any independent contractor providing goods or services to a railroad; any employee of such owner, manufacturer, lessor, lessee, or independent contractor; and anyone held by the Federal Railroad Administrator to be responsible under § 213.5(d) or § 213.303(c). Each day a violation continues shall constitute a separate offense. See appendix B to this part for a statement of agency civil penalty policy.

(b) Any person who knowingly and willfully falsifies a record or report required by this part may be subject to criminal penalties under 49 U.S.C. 21311.

[63 FR 34029, June 22, 1998, as amended at 69 FR 30593, May 28, 2004; 72 FR 51196, Sept. 6, 2007]

§ 213.17 Waivers.

(a) Any owner of track to which this part applies, or other person subject to this part, may petition the Federal Railroad Administrator for a waiver from any or all requirements prescribed in this part. The filing of such a petition does not affect that person's responsibility for compliance with that requirement while the petition is being considered.

(b) Each petition for a waiver under this section shall be filed in the manner and contain the information required by part 211 of this chapter.

(c) If the Administrator finds that a waiver is in the public interest and is consistent with railroad safety, the Administrator may grant the exemption subject to any conditions the Administrator deems necessary. Where a waiver is granted, the Administrator publishes a notice containing the reasons for granting the waiver.

§ 213.19 Information collection.

(a) The information collection requirements of this part were reviewed by the Office of Management and Budget pursuant to the Paperwork Reduction Act of 1995 (44 U.S.C. 3501 *et seq.*) and are assigned OMB control number 2130–0010.

(b) The information collection requirements are found in the following sections: §§ 213.4, 213.5, 213.7, 213.17, 213.57, 213.119, 213.122, 213.233, 213.237, 213.241, 213.303, 213.305, 213.317, 213.329, 213.333, 213.339, 213.341, 213.343, 213.345, 213.353, 213.361, 213.369.

Subpart B—Roadbed

§ 213.31 Scope.

This subpart prescribes minimum requirements for roadbed and areas immediately adjacent to roadbed.

§ 213.33 Drainage.

Each drainage or other water carrying facility under or immediately adjacent to the roadbed shall be maintained and kept free of obstruction, to accommodate expected water flow for the area concerned.

§ 213.37 Vegetation.

Vegetation on railroad property which is on or immediately adjacent to roadbed shall be controlled so that it does not—

(a) Become a fire hazard to track-carrying structures;

(b) Obstruct visibility of railroad signs and signals:

(1) Along the right-of-way, and

(2) At highway-rail crossings; (This paragraph (b)(2) is applicable September 21, 1999.)

(c) Interfere with railroad employees performing normal trackside duties;

(d) Prevent proper functioning of signal and communication lines; or

(e) Prevent railroad employees from visually inspecting moving equipment from their normal duty stations.

Subpart C—Track Geometry

§ 213.51 Scope.

This subpart prescribes requirements for the gage, alinement, and surface of track, and the elevation of outer rails and speed limitations for curved track.

§ 213.53 Gage.

(a) Gage is measured between the heads of the rails at right-angles to the rails in a plane five-eighths of an inch below the top of the rail head.

(b) Gage shall be within the limits prescribed in the following table—

Class of track	The gage must be at least—	But not more than—
Excepted track	N/A	4′10¼″.
Class 1 track	4′8″	4′10″.
Class 2 and 3 track	4′8″	4′9¾″.
Class 4 and 5 track	4′8″	4′9½″.

§ 213.55 Alinement.

Alinement may not deviate from uniformity more than the amount prescribed in the following table:

Class of track	Tangent track	Curved track	
	The deviation of the mid-offset from a 62-foot line [1] may not be more than— (inches)	The deviation of the mid-ordinate from a 31-foot chord [2] may not be more than— (inches)	The deviation of the mid-ordinate from a 62-foot chord [2] may not be more than— (inches)
Class 1 track	5	[3] N/A	5
Class 2 track	3	[3] N/A	3
Class 3 track	1¾	1¼	1¾
Class 4 track	1½	1	1½
Class 5 track	¾	½	⅝

[1] The ends of the line shall be at points on the gage side of the line rail, five-eighths of an inch below the top of the railhead. Either rail may be used as the line rail, however, the same rail shall be used for the full length of that tangential segment of track.

[2] The ends of the chord shall be at points on the gage side of the outer rail, five-eighths of an inch below the top of the railhead.

[3] N/A—Not Applicable.

§ 213.57 Curves; elevation and speed limitations.

(a) The maximum crosslevel on the outside rail of a curve may not be more than 8 inches on track Classes 1 and 2 and 7 inches on Classes 3 through 5. Except as provided in § 213.63, the outside rail of a curve may not be lower than the inside rail. (The first sentence of paragraph (a) is applicable September 21, 1999.)

(b)(1) The maximum allowable operating speed for each curve is determined by the following formula—

$$V_{max} = \sqrt{\frac{E_a + 3}{0.0007D}}$$

Where—

V_{max} = Maximum allowable operating speed (miles per hour).

E_a = Actual elevation of the outside rail (inches).[1]

D = Degree of curvature (degrees).[2]

(2) Table 1 of Appendix A is a table of maximum allowable operating speed computed in accordance with this formula for various elevations and degrees of curvature.

(c)(1) For rolling stock meeting the requirements specified in paragraph (d) of this section, the maximum operating speed for each curve may be determined by the following formula—

$$V_{max} = \sqrt{\frac{E_a + 4}{0.0007D}}$$

Where—

V_{max} = Maximum allowable operating speed (miles per hour).

E_a = Actual elevation of the outside rail (inches).[1]

D = Degree of curvature (degrees).[2]

(2) Table 2 of Appendix A is a table of maximum allowable operating speed computed in accordance with this formula for various elevations and degrees of curvature.

(d) Qualified equipment may be operated at curving speeds determined by the formula in paragraph (c) of this section, provided each specific class of equipment is approved for operation by the Federal Railroad Administration and the railroad demonstrates that:

(1) When positioned on a track with a uniform 4-inch superelevation, the roll angle between the floor of the equipment and the horizontal does not exceed 5.7 degrees; and

(2) When positioned on a track with a uniform 6 inch superelevation, no wheel of the equipment unloads to a value of 60 percent of its static value on perfectly level track, and the roll angle between the floor of the equipment and the horizontal does not exceed 8.6 degrees.

(3) The track owner shall notify the Federal Railroad Administrator no less than 30 calendar days prior to the proposed implementation of the higher curving speeds allowed under the formula in paragraph (c) of this section. The notification shall be in writing and shall contain, at a minimum, the following information—

(i) A complete description of the class of equipment involved, including schematic diagrams of the suspension systems and the location of the center of gravity above top of rail;

(ii) A complete description of the test procedure[3] and instrumentation used to qualify the equipment and the maximum values for wheel unloading and roll angles which were observed during testing;

(iii) Procedures or standards in effect which relate to the maintenance of the suspension system for the particular class of equipment; and

(iv) Identification of line segment on which the higher curving speeds are proposed to be implemented.

(e) A track owner, or an operator of a passenger or commuter service, who provides passenger or commuter service over trackage of more than one track owner with the same class of equipment may provide written notification to the Federal Railroad Administrator with the written consent of the other affected track owners.

(f) Equipment presently operating at curving speeds allowed under the formula in paragraph (c) of this section,

[1] Actual elevation for each 155 foot track segment in the body of the curve is determined by averaging the elevation for 10 points through the segment at 15.5 foot spacing. If the curve length is less than 155 feet, average the points through the full length of the body of the curve.

[2] Degree of curvature is determined by averaging the degree of curvature over the same track segment as the elevation.

[3] The test procedure may be conducted in a test facility whereby all the wheels on one side (right or left) of the equipment are alternately raised and lowered by 4 and 6 inches and the vertical wheel loads under each wheel are measured and a level is used to record the angle through which the floor of the equipment has been rotated.

by reason of conditional waivers granted by the Federal Railroad Administration, shall be considered to have successfully complied with the requirements of paragraph (d) of this section.

(g) A track owner or a railroad operating above Class 5 speeds, may request approval from the Federal Railroad Administrator to operate specified equipment at a level of cant deficiency greater than four inches in accordance with § 213.329(c) and (d) on curves in Class 1 through 5 track which are contiguous to the high speed track provided that—

(1) The track owner or railroad submits a test plan to the Federal Railroad Administrator for approval no less than thirty calendar days prior to any proposed implementation of the higher curving speeds. The test plan shall include an analysis and determination of carbody acceleration safety limits for each vehicle type which indicate wheel unloading of 60 percent in a steady state condition and 80 percent in a transient (point by point) condition. Accelerometers shall be laterally-oriented and floor-mounted near the end of a representative vehicle of each type;

(2) Upon FRA approval of a test plan, the track owner or railroad conducts incrementally increasing train speed test runs over the curves in the identified track segment(s) to demonstrate that wheel unloading is within the limits prescribed in paragraph (g)(1) of this section;

(3) Upon FRA approval of a cant deficiency level, the track owner or railroad inspects the curves in the identified track segment with a Track Geometry Measurement System (TGMS) qualified in accordance with § 213.333 (b) through (g) at an inspection frequency of at least twice annually with not less than 120 days interval between inspections; and

(4) The track owner or railroad operates an instrumented car having dynamic response characteristics that are representative of other equipment assigned to service or a portable device that monitors on-board instrumentation on trains over the curves in the identified track segment at the revenue speed profile at a frequency of at least once every 90-day period with not less than 30 days interval between inspections. The instrumented car or the portable device shall monitor a laterally-oriented accelerometer placed near the end of the vehicle at the floor level. If the carbody lateral acceleration measurement exceeds the safety limits prescribed in paragraph (g)(1), the railroad shall operate trains at curving speeds in accordance with paragraph (b) or (c) of this section; and

(5) The track owner or railroad shall maintain a copy of the most recent exception printouts for the inspections required under paragraphs (g)(3) and (4) of this section.

[63 FR 34029, June 22, 1998; 63 FR 54078, Oct. 8, 1998]

§ 213.59 Elevation of curved track; runoff.

(a) If a curve is elevated, the full elevation shall be provided throughout the curve, unless physical conditions do not permit. If elevation runoff occurs in a curve, the actual minimum elevation shall be used in computing the maximum allowable operating speed for that curve under § 213.57(b).

(b) Elevation runoff shall be at a uniform rate, within the limits of track surface deviation prescribed in § 213.63, and it shall extend at least the full length of the spirals. If physical conditions do not permit a spiral long enough to accommodate the minimum length of runoff, part of the runoff may be on tangent track.

§ 213.63 Track surface.

Each owner of the track to which this part applies shall maintain the surface of its track within the limits prescribed in the following table:

Track surface	Class of track				
	1 (inches)	2 (inches)	3 (inches)	4 (inches)	5 (inches)
The runoff in any 31 feet of rail at the end of a raise may not be more than.	3½	3	2	1½	1

Track surface	Class of track				
	1 (inches)	2 (inches)	3 (inches)	4 (inches)	5 (inches)
The deviation from uniform profile on either rail at the mid-ordinate of a 62-foot chord may not be more than	3	2¾	2¼	2	1¼
The deviation from zero crosslevel at any point on tangent or reverse crosslevel elevation on curves may not be more than	3	2	1¾	1¼	1
The difference in crosslevel between any two points less than 62 feet apart may not be more than* [1,2]	3	2¼	2	1¾	1½
*Where determined by engineering decision prior to the promulgation of this rule, due to physical restrictions on spiral length and operating practices and experience, the variation in crosslevel on spirals per 31 feet may not be more than	2	1¾	1¼	1	¾

[1] Except as limited by §213.57(a), where the elevation at any point in a curve equals or exceeds 6 inches, the difference in crosslevel within 62 feet between that point and a point with greater elevation may not be more than 1½ inches. (Footnote 1 is applicable September 21, 1999.)

[2] However, to control harmonics on Class 2 through 5 jointed track with staggered joints, the crosslevel differences shall not exceed 1¼ inches in all of six consecutive pairs of joints, as created by 7 low joints. Track with joints staggered less than 10 feet shall not be considered as having staggered joints. Joints within the 7 low joints outside of the regular joint spacing shall not be considered as joints for purposes of this footnote. (Footnote 2 is applicable September 21, 1999.)

[63 FR 34029, June 22, 1998; 63 FR 45959, Aug. 28, 1998]

Subpart D—Track Structure

§213.101 Scope.

This subpart prescribes minimum requirements for ballast, crossties, track assembly fittings, and the physical conditions of rails.

§213.103 Ballast; general.

Unless it is otherwise structurally supported, all track shall be supported by material which will—

(a) Transmit and distribute the load of the track and railroad rolling equipment to the subgrade;

(b) Restrain the track laterally, longitudinally, and vertically under dynamic loads imposed by railroad rolling equipment and thermal stress exerted by the rails;

(c) Provide adequate drainage for the track; and

(d) Maintain proper track crosslevel, surface, and alinement.

§213.109 Crossties.

(a) Crossties shall be made of a material to which rail can be securely fastened.

(b) Each 39 foot segment of track shall have—

(1) A sufficient number of crossties which in combination provide effective support that will—

(i) Hold gage within the limits prescribed in §213.53(b);

(ii) Maintain surface within the limits prescribed in §213.63; and

(iii) Maintain alinement within the limits prescribed in §213.55.

(2) The minimum number and type of crossties specified in paragraphs (c) and (d) of this section effectively distributed to support the entire segment; and

(3) At least one crosstie of the type specified in paragraphs (c) and (d) of this section that is located at a joint location as specified in paragraph (f) of this section.

(c) Each 39 foot segment of: Class 1 track shall have five crossties; Classes 2 and 3 track shall have eight crossties; and Classes 4 and 5 track shall have 12 crossties, which are not:

(1) Broken through;

(2) Split or otherwise impaired to the extent the crossties will allow the ballast to work through, or will not hold spikes or rail fasteners;

(3) So deteriorated that the tie plate or base of rail can move laterally more than ½ inch relative to the crossties; or

(4) Cut by the tie plate through more than 40 percent of a ties' thickness.

(d) Each 39 foot segment of track shall have the minimum number and type of crossties as indicated in the following table (this paragraph (d) is applicable September 21, 2000).

Class of track	Tangent track and curves ≤2 degrees	Turnouts and curved track over 2 degrees
Class 1 track	5	6

Class of track	Tangent track and curves ≤2 degrees	Turnouts and curved track over 2 degrees
Class 2 track	8	9
Class 3 track	8	10
Class 4 and 5 track	12	14

(e) Crossties counted to satisfy the requirements set forth in the table in paragraph (d) of this section shall not be—

(1) Broken through;

(2) Split or otherwise impaired to the extent the crossties will allow the ballast to work through, or will not hold spikes or rail fasteners;

(3) So deteriorated that the tie plate or base of rail can move laterally ½ inch relative to the crossties; or

(4) Cut by the tie plate through more than 40 percent of a crosstie's thickness (this paragraph (e) is applicable September 21, 2000).

(f) Class 1 and Class 2 track shall have one crosstie whose centerline is within 24 inches of each rail joint location, and Classes 3 through 5 track shall have one crosstie whose centerline is within 18 inches of each rail joint location or, two crossties whose centerlines are within 24 inches either side of each rail joint location. The relative position of these ties is described in the following diagrams:

Classes 1 and 2

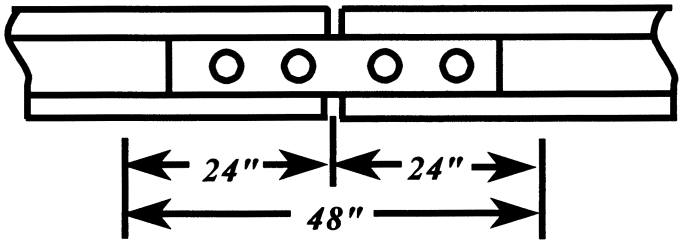

Each rail joint in Classes 1 and 2 track shall be supported by at least one crosstie specified in paragraphs (c) and (d) of this section whose centerline is within 48″ shown above.

Classes 3 through 5

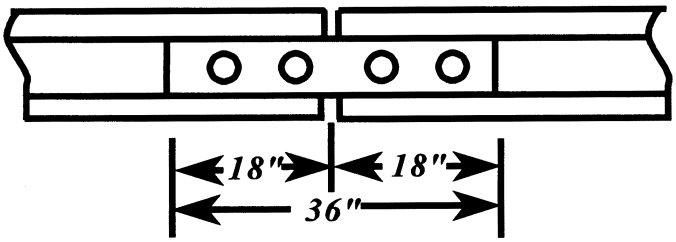

Each rail joint in Classes 3 through 5 track shall be supported by either at least one crosstie specified in paragraphs (c) and (d) of this section whose centerline is within 36″ shown above, or:

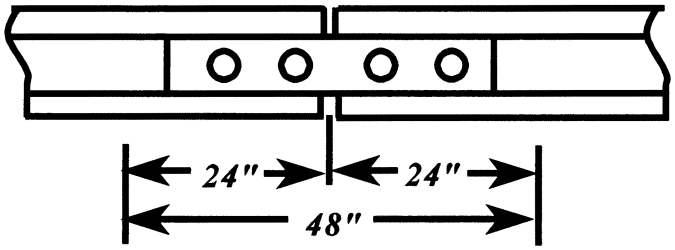

Two crossties, one on each side of the rail joint, whose centerlines are within 24″ of the rail joint location shown above.

(g) For track constructed without crossties, such as slab track, track connected directly to bridge structural components and track over servicing pits, the track structure shall meet the requirements of paragraphs (b)(1)(i), (ii), and (iii) of this section.

[63 FR 34029, June 22, 1998; 63 FR 46102, Aug. 28, 1998]

§213.110 Gage restraint measurement systems.

(a) A track owner may elect to implement a Gage Restraint Measurement System (GRMS), supplemented by the use of a Portable Track Loading Fixture (PTLF), to determine compliance with the crosstie and fastener requirements specified in §§213.109 and 213.127 provided that—

(1) The track owner notifies the appropriate FRA Regional office at least 30 days prior to the designation of any line segment on which GRMS technology will be implemented; and

(2) The track owner notifies the appropriate FRA Regional office at least 10 days prior to the removal of any line segment from GRMS designation.

(b) Initial notification under paragraph (a)(1) of this section shall include—

(1) Identification of the line segment(s) by timetable designation, milepost limits, class of track, or other identifying criteria; and

(2) The most recent record of million gross tons of traffic per year over the identified segment(s).

(c) The track owner shall also provide to FRA sufficient technical data to establish compliance with the minimum design requirements of a GRMS vehicle which specify that—

(1) Gage restraint shall be measured between the heads of rail—

(A) At an interval not exceeding 16 inches;

(B) Under an applied vertical load of no less than 10,000 pounds per rail; and

(C) Under an applied lateral load which provides for a lateral/vertical load ratio between 0.5 and 1.25, and a load severity greater than 3,000 pounds but less than 8,000 pounds.

(d) Load severity is defined by the formula—S=L-cV

Where—

S=Load severity, defined as the lateral load applied to the fastener system (pounds).
L=Actual lateral load applied (pounds).
c=Coefficient of friction between rail/tie which is assigned a nominal value of (0.4).
V=Actual vertical load applied (pounds).

(e) The measured gage values shall be converted to a Projected Loaded Gage 24 (PLG 24) as follows—

$$PLG\ 24 = UTG + A \times (LTG - UTG)$$

Where—

UTG=Unloaded track gage measured by the GRMS vehicle at a point no less than 10 feet from any lateral or vertical load application.

LTG=Loaded track gage measured by the GRMS vehicle at a point no more than 12 inches from the lateral load application point.

A=The extrapolation factor used to convert the measured loaded gage to expected loaded gage under a 24,000 pound lateral load and a 33,000 pound vertical load.

For all track—

$$A = \frac{13.153}{(.001 \times L - .000258 \times V) - .009 \times (.001 \times L - .000258 \times V)^2}$$

NOTE: The A factor shall not exceed (3.184) under any valid loading configuration.

where—

L=Actual lateral load applied (pounds).

V=Actual vertical load applied (pounds).

(f) The measured gage value shall be converted to a Gage Widening Ratio (GWR) as follows—

$$GWR = \frac{(LTG - UTG)}{L} \times 16{,}000$$

(g) The GRMS vehicle shall be capable of producing output reports that provide a trace, on a constant-distance scale, of all parameters specified in paragraph (l) of this section.

(h) The GRMS vehicle shall be capable of providing an exception report containing a systematic listing of all exceptions, by magnitude and location, to all the parameters specified in paragraph (l) of this section.

(i) The exception reports required by this section shall be provided to the appropriate person designated as fully qualified under § 213.7 prior to the next inspection required under § 213.233.

(j) The track owner shall institute the necessary procedures for maintaining the integrity of the data collected by the GRMS and PTLF systems. At a minimum, the track owner shall—

(1) Maintain and make available to the Federal Railroad Administration documented calibration procedures on each GRMS vehicle which, at a minimum, shall specify a daily instrument verification procedure that will ensure correlation between measurements made on the ground and those recorded by the instrumentation with respect to loaded and unloaded gage parameters; and

(2) Maintain each PTLF used for determining compliance with the requirements of this section such that the 4,000-pound reading is accurate to within five percent of that reading.

(k) The track owner shall provide training in GRMS technology to all persons designated as fully qualified under § 213.7 and whose territories are subject to the requirements of this section. The training program shall be made available to the Federal Railroad Administration upon request. At a minimum, the training program shall address—

(1) Basic GRMS procedures;

(2) Interpretation and handling of exception reports generated by the GRMS vehicle;

(3) Locating and verifying defects in the field;

(4) Remedial action requirements;

(5) Use and calibration of the PTLF; and

(6) Recordkeeping requirements.

(l) The GRMS record of lateral restraint shall identify two exception levels. At a minimum, the track owner shall initiate the required remedial action at each exception level as defined in the following table—

GRMS parameter [1]	If measurement value exceeds	Remedial action required
		First Level Exception
UTG	58 inches	(1) Immediately protect the exception location with a 10 mph speed restriction; then verify location; and (2) Restore lateral restraint and maintain in compliance with PTLF criteria as described in paragraph (m) of this section; and (3) Maintain compliance with §213.53(b) of this part as measured with the PTLF.
LTG	58 inches.	
PLG24	59 inches.	
GWR	1.0 inches.	
		Second Level Exception
LTG	57¾ inches on Class 4 and 5 track [2].	[2] Limit operating speed to no more than the maximum allowable under §213.9 for Class 3 track; then verify location; and (1) Maintain in compliance with PTLF criteria as described in paragraph (m) of this section; and (2) Maintain compliance with §213.53(b) of this part as measured with the PTLF.
PLG24	58 inches.	
GWR	0.75 inches.	

[1] Definitions for the GRMS parameters referenced in this table are found in paragraph (p) of this section.
[2] This note recognizes that typical good track will increase in total gage by as much as ¼ inch due to outward rail rotation under GRMS loading conditions. For Class 2 & 3 track, the GRMS LTG values are also increased by ¼ inch to a maximum of 58 inches. However, for any Class of track, GRMS LTG values in excess of 58 inches are considered First Level exceptions and the appropriate remedial actions must be taken by the track owner. This ¼-inch increase in allowable gage applies only to GRMS LTG. For gage measured by traditional methods, or with the use of the PTLF, the table in §213.53(b) will apply.

(m) Between GRMS inspections, the PTLF may be used as an additional analytical tool to assist fully qualified §213.7 individuals in determining compliance with the crosstie and fastener requirements of §§213.109 and 213.127. When the PTLF is used, whether as an additional analytical tool or to fulfill the requirements of paragraph (l), it shall be used subject to the following criteria—

(1) At any location along the track that the PTLF is applied, that location will be deemed in compliance with the crosstie and fastener requirements specified in §§213.109 and 213.127 provided that—

(i) The total gage widening at that location does not exceed ⅝ inch when increasing the applied force from 0 to 4,000 pounds; and

(ii) The gage of the track under 4,000 pounds of applied force does not exceed the allowable gage prescribed in §213.53(b) for the class of track.

(2) Gage widening in excess of ⅝ inch shall constitute a deviation from Class 1 standards.

(3) A person designated as fully qualified under §213.7 retains the discretionary authority to prescribe additional remedial actions for those locations which comply with the requirements of paragraph (m)(1)(i) and (ii) of this section.

(4) When a functional PTLF is not available to a fully qualified person designated under §213.7, the criteria for determining crosstie and fastener compliance shall be based solely on the requirements specified in §§213.109 and 213.127.

(5) If the PTLF becomes non-functional or is missing, the track owner will replace or repair it before the next inspection required under §213.233.

(6) Where vertical loading of the track is necessary for contact with the lateral rail restraint components, a PTLF test will not be considered valid until contact with these components is restored under static loading conditions.

(n) The track owner shall maintain a record of the two most recent GRMS inspections at locations which meet the requirements specified in §213.241(b). At a minimum, records shall indicate the following—

(1) Location and nature of each First Level exception; and

(2) Nature and date of remedial action, if any, for each exception identified in paragraph (n)(1) of this section.

(o) The inspection interval for designated GRMS line segments shall be such that—

(1) On line segments where the annual tonnage exceeds two million gross tons, or where the maximum operating speeds for passenger trains exceeds 30 mph, GRMS inspections must be performed annually at an interval not to exceed 14 months; or

(2) On line segments where the annual tonnage is two million gross tons or less and the maximum operating speed for passenger trains does not exceed 30 mph, the interval between GRMS inspections must not exceed 24 months.

(p) As used in this section—

(1) *Gage Restraint Measurement System (GRMS)* means a track loading vehicle meeting the minimum design requirements specified in this section.

(2) *Gage Widening Ratio (GWR)* means the measured difference between loaded and unloaded gage measurements, linearly normalized to 16,000 pounds of applied lateral load.

(3) *L/V ratio* means the numerical ratio of lateral load applied at a point on the rail to the vertical load applied at that same point. GRMS design requirements specify an L/V ratio of between 0.5 and 1.25. GRMS vehicles using load combinations developing L/V ratios which exceed 0.8 must be operated with caution to protect against the risk of wheel climb by the test wheelset.

(4) *Load severity* means the amount of lateral load applied to the fastener system after friction between rail and tie is overcome by any applied gage-widening lateral load.

(5) *Loaded Track Gage (LTG)* means the gage measured by the GRMS vehicle at a point no more than 12 inches from the lateral load application point.

(6) *Portable Track Loading Fixture (PTLF)* means a portable track loading device capable of applying an increasing lateral force from 0 to 4,000 pounds on the web/base fillet of each rail simultaneously.

(7) *Projected Loaded Gage (PLG)* means an extrapolated value for loaded gage calculated from actual measured loads and deflections. PLG 24 means the extrapolated value for loaded gage under a 24,000 pound lateral load and a 33,000 pound vertical load.

(8) *Unloaded Track Gage (UTG)* means the gage measured by the GRMS vehicle at a point no less than 10 feet from any lateral or vertical load.

[66 FR 1899, Jan. 10, 2001; 66 FR 8372, Jan. 31, 2001]

§ 213.113 Defective rails.

(a) When an owner of track to which this part applies learns, through inspection or otherwise, that a rail in that track contains any of the defects listed in the following table, a person designated under § 213.7 shall determine whether or not the track may continue in use. If he determines that the track may continue in use, operation over the defective rail is not permitted until—

(1) The rail is replaced; or

(2) The remedial action prescribed in the table is initiated.

REMEDIAL ACTION

Defect	Length of defect (inch)		Percent of rail head cross-sectional area weakened by defect		If defective rail is not replaced, take the remedial action prescribed in note
	More than	But not more than	Less than	But not less than	
Transverse fissure			70 100	5 70 100	B. A2. A.
Compound fissure			70 100	5 70 100	B. A2. A.
Detail fracture Engine burn fracture Defective weld			25 80 100	5 25 80 100	C. D. [A2] or[E and H]. [A] or [E and H].
Horizontal split head Vertical split head Split web Piped rail Head web separation	1 2 4 (1)	2 4 (1)	(1)		H and F. I and G. B. A.
Bolt hole crack	½ 1 1½ (1)	1 1½ (1)	(1)		H and F. H and G. B. A.
Broken base	1 6	6			D. [A] or [E and I].
Ordinary break					A or E.
Damaged rail					D.
Flattened rail	Depth > ⅜ and Length > 8				H.

(1) Break out in rail head.

NOTES: A. Assign person designated under §213.7 to visually supervise each operation over defective rail.

A2. Assign person designated under §213.7 to make visual inspection. After a visual inspection, that person may authorize operation to continue without continuous visual

supervision at a maximum of 10 m.p.h. for up to 24 hours prior to another such visual inspection or replacement or repair of the rail.

B. Limit operating speed over defective rail to that as authorized by a person designated under § 213.7(a), who has at least one year of supervisory experience in railroad track maintenance. The operating speed cannot be over 30 m.p.h. or the maximum allowable speed under § 213.9 for the class of track concerned, whichever is lower.

C. Apply joint bars bolted only through the outermost holes to defect within 20 days after it is determined to continue the track in use. In the case of Classes 3 through 5 track, limit operating speed over defective rail to 30 m.p.h. until joint bars are applied; thereafter, limit speed to 50 m.p.h. or the maximum allowable speed under § 213.9 for the class of track concerned, whichever is lower. When a search for internal rail defects is conducted under § 213.237, and defects are discovered in Classes 3 through 5 which require remedial action C, the operating speed shall be limited to 50 m.p.h., or the maximum allowable speed under § 213.9 for the class of track concerned, whichever is lower, for a period not to exceed 4 days. If the defective rail has not been removed from the track or a permanent repair made within 4 days of the discovery, limit operating speed over the defective rail to 30 m.p.h. until joint bars are applied; thereafter, limit speed to 50 m.p.h. or the maximum allowable speed under § 213.9 for the class of track concerned, whichever is lower.

D. Apply joint bars bolted only through the outermost holes to defect within 10 days after it is determined to continue the track in use. In the case of Classes 3 through 5 track, limit operating speed over the defective rail to 30 m.p.h. or less as authorized by a person designated under § 213.7(a), who has at least one year of supervisory experience in railroad track maintenance, until joint bars are applied; thereafter, limit speed to 50 m.p.h. or the maximum allowable speed under § 213.9 for the class of track concerned, whichever is lower.

E. Apply joint bars to defect and bolt in accordance with § 213.121(d) and (e).

F. Inspect rail 90 days after it is determined to continue the track in use.

G. Inspect rail 30 days after it is determined to continue the track in use.

H. Limit operating speed over defective rail to 50 m.p.h. or the maximum allowable speed under § 213.9 for the class of track concerned, whichever is lower.

I. Limit operating speed over defective rail to 30 m.p.h. or the maximum allowable speed under § 213.9 for the class of track concerned, whichever is lower.

(b) As used in this section—

(1) *Transverse fissure* means a progressive crosswise fracture starting from a crystalline center or nucleus inside the head from which it spreads outward as a smooth, bright, or dark, round or oval surface substantially at a right angle to the length of the rail. The distinguishing features of a transverse fissure from other types of fractures or defects are the crystalline center or nucleus and the nearly smooth surface of the development which surrounds it.

(2) *Compound fissure* means a progressive fracture originating in a horizontal split head which turns up or down in the head of the rail as a smooth, bright, or dark surface progressing until substantially at a right angle to the length of the rail. Compound fissures require examination of both faces of the fracture to locate the horizontal split head from which they originate.

(3) *Horizontal split head* means a horizontal progressive defect originating inside of the rail head, usually one-quarter inch or more below the running surface and progressing horizontally in all directions, and generally accompanied by a flat spot on the running surface. The defect appears as a crack lengthwise of the rail when it reaches the side of the rail head.

(4) *Vertical split head* means a vertical split through or near the middle of the head, and extending into or through it. A crack or rust streak may show under the head close to the web or pieces may be split off the side of the head.

(5) *Split web* means a lengthwise crack along the side of the web and extending into or through it.

(6) *Piped rail* means a vertical split in a rail, usually in the web, due to failure of the shrinkage cavity in the ingot to unite in rolling.

(7) *Broken base* means any break in the base of the rail.

(8) *Detail fracture* means a progressive fracture originating at or near the surface of the rail head. These fractures should not be confused with transverse fissures, compound fissures, or other defects which have internal origins. Detail fractures may arise from shelly spots, head checks, or flaking.

(9) *Engine burn fracture* means a progressive fracture originating in spots where driving wheels have slipped on top of the rail head. In developing downward they frequently resemble the

compound or even transverse fissures with which they should not be confused or classified.

(10) *Ordinary break* means a partial or complete break in which there is no sign of a fissure, and in which none of the other defects described in this paragraph (b) are found.

(11) *Damaged rail* means any rail broken or injured by wrecks, broken, flat, or unbalanced wheels, slipping, or similar causes.

(12) *Flattened rail* means a short length of rail, not at a joint, which has flattened out across the width of the rail head to a depth of ⅜ inch or more below the rest of the rail. Flattened rail occurrences have no repetitive regularity and thus do not include corrugations, and have no apparent localized cause such as a weld or engine burn. Their individual length is relatively short, as compared to a condition such as head flow on the low rail of curves.

(13) *Bolt hole crack* means a crack across the web, originating from a bolt hole, and progressing on a path either inclined upward toward the rail head or inclined downward toward the base. Fully developed bolt hole cracks may continue horizontally along the head/web or base/web fillet, or they may progress into and through the head or base to separate a piece of the rail end from the rail. Multiple cracks occurring in one rail end are considered to be a single defect. However, bolt hole cracks occurring in adjacent rail ends within the same joint must be reported as separate defects.

(14) *Defective weld* means a field or plant weld containing any discontinuities or pockets, exceeding 5 percent of the rail head area individually or 10 percent in the aggregate, oriented in or near the transverse plane, due to incomplete penetration of the weld metal between the rail ends, lack of fusion between weld and rail end metal, entrainment of slag or sand, under-bead or other shrinkage cracking, or fatigue cracking. Weld defects may originate in the rail head, web, or base, and in some cases, cracks may progress from the defect into either or both adjoining rail ends.

(15) *Head and web separation* means a progressive fracture, longitudinally separating the head from the web of the rail at the head fillet area.

[63 FR 34029, June 22, 1998; 63 FR 51639, Sept. 28, 1998]

§ 213.115 Rail end mismatch.

Any mismatch of rails at joints may not be more than that prescribed by the following table—

Class of track	Any mismatch of rails at joints may not be more than the following—	
	On the tread of the rail ends (inch)	On the gage side of the rail ends (inch)
Class 1 track	¼	¼
Class 2 track	¼	3/16
Class 3 track	3/16	3/16
Class 4 and 5 track	⅛	⅛

§ 213.119 Continuous welded rail (CWR); general.

Each track owner with track constructed of CWR shall have in effect and comply with a plan that contains written procedures which address: the installation, adjustment, maintenance, and inspection of CWR; inspection of CWR joints; and a training program for the application of those procedures. The plan shall be submitted to the Federal Railroad Administration. FRA reviews each plan for compliance with the following—

(a) Procedures for the installation and adjustment of CWR which include—

(1) Designation of a desired rail installation temperature range for the geographic area in which the CWR is located; and

(2) De-stressing procedures/methods which address proper attainment of the desired rail installation temperature range when adjusting CWR.

(b) Rail anchoring or fastening requirements that will provide sufficient restraint to limit longitudinal rail and crosstie movement to the extent practical, and specifically addressing CWR rail anchoring or fastening patterns on bridges, bridge approaches, and at other locations where possible longitudinal rail and crosstie movement associated with normally expected train-induced forces, is restricted.

(c) Procedures which specifically address maintaining a desired rail installation temperature range when cutting CWR including rail repairs, in-track welding, and in conjunction with adjustments made in the area of tight track, a track buckle, or a pull-apart. Rail repair practices shall take into consideration existing rail temperature so that—

(1) When rail is removed, the length installed shall be determined by taking into consideration the existing rail temperature and the desired rail installation temperature range; and

(2) Under no circumstances should rail be added when the rail temperature is below that designated by paragraph (a)(1) of this section, without provisions for later adjustment.

(d) Procedures which address the monitoring of CWR in curved track for inward shifts of alinement toward the center of the curve as a result of disturbed track.

(e) Procedures which control train speed on CWR track when—

(1) Maintenance work, track rehabilitation, track construction, or any other event occurs which disturbs the roadbed or ballast section and reduces the lateral or longitudinal resistance of the track; and

(2) In formulating the procedures under this paragraph (e), the track owner shall—

(i) Determine the speed required, and the duration and subsequent removal of any speed restriction based on the restoration of the ballast, along with sufficient ballast re-consolidation to stabilize the track to a level that can accommodate expected train-induced forces. Ballast re-consolidation can be achieved through either the passage of train tonnage or mechanical stabilization procedures, or both; and

(ii) Take into consideration the type of crossties used.

(f) Procedures which prescribe when physical track inspections are to be performed to detect buckling prone conditions in CWR track. At a minimum, these procedures shall address inspecting track to identify—

(1) Locations where tight or kinky rail conditions are likely to occur;

(2) Locations where track work of the nature described in paragraph (e)(1) of this section have recently been performed; and

(3) In formulating the procedures under this paragraph (f), the track owner shall—

(i) Specify the timing of the inspection; and

(ii) Specify the appropriate remedial actions to be taken when buckling prone conditions are found.

(g) Procedures which prescribe the scheduling and conduct of inspections to detect cracks and other indications of potential failures in CWR joints. On and after January 1, 2007, in formulating the procedures under this paragraph, the track owner shall—

(1) Address the inspection of joints and the track structure at joints, including, at a minimum, periodic on-foot inspections;

(2) Identify joint bars with visible or otherwise detectable cracks and conduct remedial action pursuant to § 213.121;

(3) Specify the conditions of actual or potential joint failure for which personnel must inspect, including, at a minimum, the following items:

(i) Loose, bent, or missing joint bolts;

(ii) Rail end batter or mismatch that contributes to instability of the joint; and

(iii) Evidence of excessive longitudinal rail movement in or near the joint, including, but not limited to; wide rail gap, defective joint bolts, disturbed ballast, surface deviations, gap between tie plates and rail, or displaced rail anchors;

(4) Specify the procedures for the inspection of CWR joints that are imbedded in highway-rail crossings or in other structures that prevent a complete inspection of the joint, including procedures for the removal from the

joint of loose material or other temporary material;

(5) Specify the appropriate corrective actions to be taken when personnel find conditions of actual or potential joint failure, including on-foot follow-up inspections to monitor conditions of potential joint failure in any period prior to completion of repairs.

(6) Specify the timing of periodic inspections, which shall be based on the configuration and condition of the joint:

(i) Except as provided in paragraphs (g)(6)(ii) through (iv), track owners must specify that all CWR joints are inspected, at a minimum, in accordance with the intervals identified in the following table—

MINIMUM NUMBER OF INSPECTIONS PER CALENDAR YEAR [1]

	Freight trains operating over track with an annual tonnage of:			Passenger trains operating over track with an annual tonnage of:	
	Less than 40 mgt	40 to 60 mgt	Greater than 60 mgt	Less than 20 mgt	Greater than or equal to 20 mgt
Class 5 & above	2	[2] 3	[2] 4	[2] 3	[2] 3
Class 4	2	[2] 3	[2] 4	2	[2] 3
Class 3	1	2	2	2	2
Class 2	0	0	0	1	1
Class 1	0	0	0	0	0
Excepted Track	0	0	0	n/a	n/a

4 = Four times per calendar year, with one inspection in each of the following periods: January to March, April to June, July to September, and October to December; and with consecutive inspections separated by at least 60 calendar days.

3 = Three times per calendar year, with one inspection in each of the following periods: January to April, May to August, and September to December; and with consecutive inspections separated by at least 90 calendar days

2 = Twice per calendar year, with one inspection in each of the following periods: January to June and July to December; and with consecutive inspections separated by at least 120 calendar days.

1 = Once per calendar year, with consecutive inspections separated by at least 180 calendar days.

[1] Where a track owner operates both freight and passenger trains over a given segment of track, and there are two different possible inspection interval requirements, the more frequent inspection interval applies.

[2] When extreme weather conditions prevent a track owner from conducting an inspection of a particular territory within the required interval, the track owner may extend the interval by up to 30 calendar days from the last day that the extreme weather condition prevented the required inspection.

(ii) Consistent with any limitations applied by the track owner, a passenger train conducting an unscheduled detour operation may proceed over track not normally used for passenger operations at a speed not to exceed the maximum authorized speed otherwise allowed, even though CWR joints have not been inspected in accordance with the frequency identified in paragraph (g)(6)(i), provided that:

(A) All CWR joints have been inspected consistent with requirements for freight service; and

(B) The unscheduled detour operation lasts no more than 14 consecutive calendar days. In order to continue operations beyond the 14-day period, the track owner must inspect the CWR joints in accordance with the requirements of paragraph (g)(6)(i).

(iii) Tourist, scenic, historic, or excursion operations, if limited to the maximum authorized speed for passenger trains over the next lower class of track, need not be considered in determining the frequency of inspections under paragraph (g)(6)(i).

(iv) All CWR joints that are located in switches, turnouts, track crossings, lift rail assemblies or other transition devices on moveable bridges must be inspected on foot at least monthly, consistent with the requirements in §213.235; and all records of those inspections must be kept in accordance with the requirements in §213.241. A track owner may include in its §213.235 inspections, in lieu of the joint inspections required by paragraph (g)(6)(i), CWR joints that are located in track structure that is adjacent to switches and turnouts, provided that the track owner precisely defines the parameters of that arrangement in the CWR plans.

(7) Specify the recordkeeping requirements related to joint bars in CWR, including the following:

(i) The track owner shall keep a record of each periodic and follow-up inspection required to be performed by the track owner's CWR plan, except for those inspections conducted pursuant to § 213.235 for which track owners must maintain records pursuant to § 213.241. The record shall be prepared on the day the inspection is made and signed by the person making the inspection. The record shall include, at a minimum, the following items: the boundaries of the territory inspected; the nature and location of any deviations at the joint from the requirements of this Part or of the track owner's CWR plan, with the location identified with sufficient precision that personnel could return to the joint and identify it without ambiguity; the date of the inspection; the remedial action, corrective action, or both, that has been taken or will be taken; and the name or identification number of the person who made the inspection.

(ii) The track owner shall generate a Fracture Report for every cracked or broken CWR joint bar that the track owner discovers during the course of an inspection conducted pursuant to §§ 213.119(g), 213.233, or 213.235 on track that is required under § 213.119(g)(6)(i) to be inspected.

(A) The Fracture Report shall be prepared on the day the cracked or broken joint bar is discovered. The record shall include, at a minimum: the railroad name; the location of the joint bar as identified by milepost and subdivision; the class of track; annual million gross tons for the previous calendar year; the date of discovery of the crack or break; the rail section; the type of bar (standard, insulated, or compromise); the number of holes in the joint bar; a general description of the location of the crack or break in bar; the visible length of the crack in inches; the gap measurement between rail ends; the amount and length of rail end batter or ramp on each rail end; the amount of tread mismatch; the vertical movement of joint; and in curves or spirals, the amount of gage mismatch and the lateral movement of the joint.

(B) The track owner shall submit the information contained in the Fracture Reports to the FRA Associate Administrator for Safety (Associate Administrator) twice annually, by July 31 for the preceding six-month period from January 1 through June 30 and by January 31 for the preceding six-month period from July 1 through December 31.

(C) After February 1, 2010, any track owner may petition FRA to conduct a technical conference to review the Fracture Report data submitted through December of 2009 and assess whether there is a continued need for the collection of Fracture Report data. The track owner shall submit a written request to the Associate Administrator, requesting the technical conference and explaining the reasons for proposing to discontinue the collection of the data.

(8) In lieu of the requirements for the inspection of rail joints contained in paragraphs (g)(1) through (7) of this section, a track owner may seek approval from FRA to use alternate procedures.

(i) The track owner shall submit the proposed alternate procedures and a supporting statement of justification to the Associate Administrator for Safety (Associate Administrator).

(ii) If the Associate Administrator finds that the proposed alternate procedures provide an equivalent or higher level of safety than the requirements in paragraphs (g)(1) through (g)(7) of this section, the Associate Administrator will approve the alternate procedures by notifying the track owner in writing. The Associate Administrator will specify in the written notification the date on which the procedures will become effective, and after that date, the track owner shall comply with the procedures. If the Associate Administrator determines that the alternate procedures do not provide an equivalent level of safety, the Associate Administrator will disapprove the alternate procedures in writing, and the track owner shall continue to comply with the requirements in paragraphs (g)(1) through (7) of this section.

(iii) While a determination is pending with the Associate Administrator on a request submitted pursuant to paragraph (g)(8) of this section, the track owner shall continue to comply with the requirements contained in paragraphs (g)(1) through (7) of this section.

(h) The track owner shall have in effect a comprehensive training program for the application of these written CWR procedures, with provisions for periodic re-training, for those individuals designated under §213.7 as qualified to supervise the installation, adjustment, and maintenance of CWR track and to perform inspections of CWR track.

(i) The track owner shall prescribe and comply with recordkeeping requirements necessary to provide an adequate history of track constructed with CWR. At a minimum, these records must include:

(1) Rail temperature, location and date of CWR installations. This record shall be retained for at least one year;

(2) A record of any CWR installation or maintenance work that does not conform with the written procedures. Such record shall include the location of the rail and be maintained until the CWR is brought into conformance with such procedures;

(3) Information on inspection of rail joints as specified in paragraph (g)(7) of this part.

(j) As used in this section—

Action Items mean the rail joint conditions that track owners identify in their CWR plans pursuant to paragraph (g)(3) which require the application of a corrective action.

Adjusting/De-stressing means the procedure by which a rail's temperature is re-adjusted to the desired value. It typically consists of cutting the rail and removing rail anchoring devices, which provides for the necessary expansion and contraction, and then reassembling the track.

Buckling Incident means the formation of a lateral misalignment sufficient in magnitude to constitute a deviation from the Class 1 requirements specified in §213.55. These normally occur when rail temperatures are relatively high and are caused by high longitudinal compressive forces.

Continuous Welded Rail (CWR) means rail that has been welded together into lengths exceeding 400 feet.

Corrective Actions mean those actions which track owners specify in their CWR plans to address conditions of actual or potential joint failure, including, as applicable, repair, restrictions on operations, and additional on-foot inspections.

CWR Joint means (a) any joint directly connected to CWR, and (b) any joint(s) in a segment of rail between CWR strings that are less than 195 feet apart, except joints located on jointed sections on bridges.

Desired Rail Installation Temperature Range means the rail temperature range, within a specific geographical area, at which forces in CWR should not cause a buckling incident in extreme heat, or a pull-apart during extreme cold weather.

Disturbed Track means the disturbance of the roadbed or ballast section, as a result of track maintenance or any other event, which reduces the lateral or longitudinal resistance of the track, or both.

Mechanical Stabilization means a type of procedure used to restore track resistance to disturbed track following certain maintenance operations. This procedure may incorporate dynamic track stabilizers or ballast consolidators, which are units of work equipment that are used as a substitute for the stabilization action provided by the passage of tonnage trains.

Rail Anchors means those devices which are attached to the rail and bear against the side of the crosstie to control longitudinal rail movement. Certain types of rail fasteners also act as rail anchors and control longitudinal rail movement by exerting a downward clamping force on the upper surface of the rail base.

Rail Temperature means the temperature of the rail, measured with a rail thermometer.

Remedial Actions mean those actions which track owners are required to take as a result of requirements of this part to address a non-compliant condition.

Tight/Kinky Rail means CWR which exhibits minute alignment irregularities which indicate that the rail is in a considerable amount of compression.

Tourist, Scenic, Historic, or Excursion Operations mean railroad operations that carry passengers with the conveyance of the passengers to a particular destination not being the principal purpose.

Train-induced Forces means the vertical, longitudinal, and lateral dynamic forces which are generated during train movement and which can contribute to the buckling potential of the rail.

Track Lateral Resistance means the resistance provided by the rail/crosstie structure against lateral displacement.

Track Longitudinal Resistance means the resistance provided by the rail anchors/rail fasteners and the ballast section to the rail/crosstie structure against longitudinal displacement.

Unscheduled Detour Operation means a short-term, unscheduled operation where a track owner has no more than 14 calendar days' notice that the operation is going to occur.

[63 FR 34029, June 22, 1998; 63 FR 46102, Aug. 28, 1998; 63 FR 49382, Sept. 15, 1998; 70 FR 66297, Nov. 2, 2005; 71 FR 59691, Oct. 11, 2006]

§ 213.121 Rail joints.

(a) Each rail joint, insulated joint, and compromise joint shall be of a structurally sound design and dimensions for the rail on which it is applied.

(b) If a joint bar on Classes 3 through 5 track is cracked, broken, or because of wear allows excessive vertical movement of either rail when all bolts are tight, it shall be replaced.

(c) If a joint bar is cracked or broken between the middle two bolt holes it shall be replaced.

(d) In the case of conventional jointed track, each rail shall be bolted with at least two bolts at each joint in Classes 2 through 5 track, and with at least one bolt in Class 1 track.

(e) In the case of continuous welded rail track, each rail shall be bolted with at least two bolts at each joint.

(f) Each joint bar shall be held in position by track bolts tightened to allow the joint bar to firmly support the abutting rail ends and to allow longitudinal movement of the rail in the joint to accommodate expansion and contraction due to temperature variations. When no-slip, joint-to-rail contact exists by design, the requirements of this paragraph do not apply. Those locations when over 400 feet in length, are considered to be continuous welded rail track and shall meet all the requirements for continuous welded rail track prescribed in this part.

(g) No rail shall have a bolt hole which is torch cut or burned in Classes 2 through 5 track. For Class 2 track, this paragraph (g) is applicable September 21, 1999.

(h) No joint bar shall be reconfigured by torch cutting in Classes 3 through 5 track.

§ 213.122 Torch cut rail.

(a) Except as a temporary repair in emergency situations no rail having a torch cut end shall be used in Classes 3 through 5 track. When a rail end is torch cut in emergency situations, train speed over that rail end shall not exceed the maximum allowable for Class 2 track. For existing torch cut rail ends in Classes 3 through 5 track the following shall apply—

(1) Within one year of September 21, 1998, all torch cut rail ends in Class 5 track shall be removed;

(2) Within two years of September 21, 1998, all torch cut rail ends in Class 4 track shall be removed; and

(3) Within one year of September 21, 1998, all torch cut rail ends in Class 3 track over which regularly scheduled passenger trains operate, shall be inventoried by the track owner.

(b) Following the expiration of the time limits specified in paragraphs (a)(1), (2), and (3) of this section, any torch cut rail end not removed from Classes 4 and 5 track, or any torch cut rail end not inventoried in Class 3 track over which regularly scheduled passenger trains operate, shall be removed within 30 days of discovery. Train speed over that rail end shall not exceed the maximum allowable for Class 2 track until removed.

§ 213.123 Tie plates.

(a) In Classes 3 through 5 track where timber crossties are in use there shall be tie plates under the running rails on at least eight of any 10 consecutive ties.

(b) In Classes 3 through 5 track no metal object which causes a concentrated load by solely supporting a rail shall be allowed between the base of the rail and the bearing surface of the tie plate. This paragraph (b) is applicable September 21, 1999.)

§ 213.127 Rail fastening systems.

Track shall be fastened by a system of components which effectively maintains gage within the limits prescribed in § 213.53(b). Each component of each such system shall be evaluated to determine whether gage is effectively being maintained.

§ 213.133 Turnouts and track crossings generally.

(a) In turnouts and track crossings, the fastenings shall be intact and maintained so as to keep the components securely in place. Also, each switch, frog, and guard rail shall be kept free of obstructions that may interfere with the passage of wheels.

(b) Classes 3 through 5 track shall be equipped with rail anchoring through and on each side of track crossings and turnouts, to restrain rail movement affecting the position of switch points and frogs. For Class 3 track, this paragraph (b) is applicable September 21, 1999.)

(c) Each flangeway at turnouts and track crossings shall be at least 1½ inches wide.

§ 213.135 Switches.

(a) Each stock rail must be securely seated in switch plates, but care shall be used to avoid canting the rail by overtightening the rail braces.

(b) Each switch point shall fit its stock rail properly, with the switch stand in either of its closed positions to allow wheels to pass the switch point. Lateral and vertical movement of a stock rail in the switch plates or of a switch plate on a tie shall not adversely affect the fit of the switch point to the stock rail. Broken or cracked switch point rails will be subject to the requirements of § 213.113, except that where remedial actions C, D, or E require the use of joint bars, and joint bars cannot be placed due to the physical configuration of the switch, remedial action B will govern, taking into account any added safety provided by the presence of reinforcing bars on the switch points.

(c) Each switch shall be maintained so that the outer edge of the wheel tread cannot contact the gage side of the stock rail.

(d) The heel of each switch rail shall be secure and the bolts in each heel shall be kept tight.

(e) Each switch stand and connecting rod shall be securely fastened and operable without excessive lost motion.

(f) Each throw lever shall be maintained so that it cannot be operated with the lock or keeper in place.

(g) Each switch position indicator shall be clearly visible at all times.

(h) Unusually chipped or worn switch points shall be repaired or replaced. Metal flow shall be removed to insure proper closure.

(i) Tongue & Plain Mate switches, which by design exceed Class 1 and excepted track maximum gage limits, are permitted in Class 1 and excepted track.

§ 213.137 Frogs.

(a) The flangeway depth measured from a plane across the wheel-bearing area of a frog on Class 1 track shall not be less than 1⅜ inches, or less than 1½ inches on Classes 2 through 5 track.

(b) If a frog point is chipped, broken, or worn more than five-eighths inch down and 6 inches back, operating speed over the frog shall not be more than 10 m.p.h.

(c) If the tread portion of a frog casting is worn down more than three-eighths inch below the original contour, operating speed over that frog shall not be more than 10 m.p.h.

(d) Where frogs are designed as flange-bearing, flangeway depth may be less than that shown for Class 1 if operated at Class 1 speeds.

§ 213.139 Spring rail frogs.

(a) The outer edge of a wheel tread shall not contact the gage side of a spring wing rail.

(b) The toe of each wing rail shall be solidly tamped and fully and tightly bolted.

(c) Each frog with a bolt hole defect or head-web separation shall be replaced.

(d) Each spring shall have compression sufficient to hold the wing rail against the point rail.

(e) The clearance between the holddown housing and the horn shall not be more than one-fourth of an inch.

§ 213.141 Self-guarded frogs.

(a) The raised guard on a self-guarded frog shall not be worn more than three-eighths of an inch.

(b) If repairs are made to a self-guarded frog without removing it from service, the guarding face shall be restored before rebuilding the point.

§ 213.143 Frog guard rails and guard faces; gage.

The guard check and guard face gages in frogs shall be within the limits prescribed in the following table—

Class of track	Guard check gage The distance between the gage line of a frog to the guard line [1] of its guard rail or guarding face, measured across the track at right angles to the gage line [2], may not be less than—	Guard face gage The distance between guard lines [1], measured across the track at right angles to the gage line [2], may not be more than—
Class 1 track	4′6⅛″	4′ 5¼″
Class 2 track	4′6¼″	4′ 5⅛″
Class 3 and 4 track	4′ 6⅜″	4′5⅛″
Class 5 track	4′6½″	4′ 5″

[1] A line along that side of the flangeway which is nearer to the center of the track and at the same elevation as the gage line.
[2] A line ⅝ inch below the top of the center line of the head of the running rail, or corresponding location of the tread portion of the track structure.

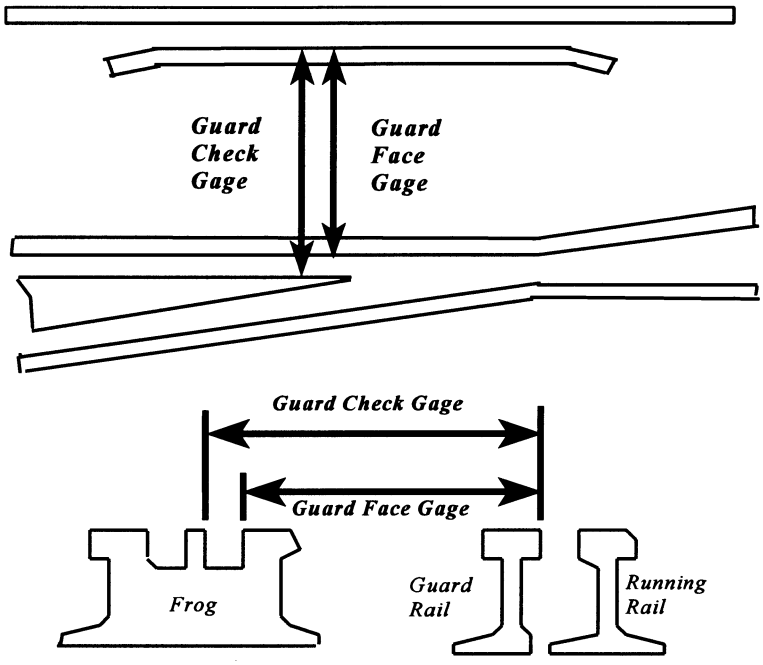

Subpart E—Track Appliances and Track-Related Devices

§ 213.201 Scope.

This subpart prescribes minimum requirements for certain track appliances and track-related devices.

§ 213.205 Derails.

(a) Each derail shall be clearly visible.

(b) When in a locked position, a derail shall be free of lost motion which would prevent it from performing its intended function.

(c) Each derail shall be maintained to function as intended.

(d) Each derail shall be properly installed for the rail to which it is applied. (This paragraph (d) is applicable September 21, 1999.)

Subpart F—Inspection

§213.231 Scope.

This subpart prescribes requirements for the frequency and manner of inspecting track to detect deviations from the standards prescribed in this part.

§213.233 Track inspections.

(a) All track shall be inspected in accordance with the schedule prescribed in paragraph (c) of this section by a person designated under §213.7.

(b) Each inspection shall be made on foot or by riding over the track in a vehicle at a speed that allows the person making the inspection to visually inspect the track structure for compliance with this part. However, mechanical, electrical, and other track inspection devices may be used to supplement visual inspection. If a vehicle is used for visual inspection, the speed of the vehicle may not be more than 5 miles per hour when passing over track crossings and turnouts, otherwise, the inspection vehicle speed shall be at the sole discretion of the inspector, based on track conditions and inspection requirements. When riding over the track in a vehicle, the inspection will be subject to the following conditions—

(1) One inspector in a vehicle may inspect up to two tracks at one time provided that the inspector's visibility remains unobstructed by any cause and that the second track is not centered more than 30 feet from the track upon which the inspector is riding;

(2) Two inspectors in one vehicle may inspect up to four tracks at a time provided that the inspectors' visibility remains unobstructed by any cause and that each track being inspected is centered within 39 feet from the track upon which the inspectors are riding;

(3) Each main track is actually traversed by the vehicle or inspected on foot at least once every two weeks, and each siding is actually traversed by the vehicle or inspected on foot at least once every month. On high density commuter railroad lines where track time does not permit an on track vehicle inspection, and where track centers are 15 foot or less, the requirements of this paragraph (b)(3) will not apply; and

(4) Track inspection records shall indicate which track(s) are traversed by the vehicle or inspected on foot as outlined in paragraph (b)(3) of this section.

(c) Each track inspection shall be made in accordance with the following schedule—

Class of track	Type of track	Required frequency
Excepted track and Class 1, 2, and 3 track.	Main track and sidings	Weekly with at least 3 calendar days interval between inspections, or before use, if the track is used less than once a week, or twice weekly with at least 1 calendar day interval between inspections, if the track carries passenger trains or more than 10 million gross tons of traffic during the preceding calendar year.
Excepted track and Class 1, 2, and 3 track.	Other than main track and sidings	Monthly with at least 20 calendar days interval between inspections.
Class 4 and 5 track		Twice weekly with at least 1 calendar day interval between inspections.

(d) If the person making the inspection finds a deviation from the requirements of this part, the inspector shall immediately initiate remedial action.

NOTE TO §213.233: Except as provided in paragraph (b) of this section, no part of this section will in any way be construed to limit the inspector's discretion as it involves inspection speed and sight distance.

§ 213.235 Inspection of switches, track crossings, and lift rail assemblies or other transition devices on moveable bridges.

(a) Except as provided in paragraph (c) of this section, each switch, turnout, track crossing, and moveable bridge lift rail assembly or other transition device shall be inspected on foot at least monthly.

(b) Each switch in Classes 3 through 5 track that is held in position only by the operating mechanism and one connecting rod shall be operated to all of its positions during one inspection in every 3 month period.

(c) In the case of track that is used less than once a month, each switch, turnout, track crossing, and moveable bridge lift rail assembly or other transition device shall be inspected on foot before it is used.

§ 213.237 Inspection of rail.

(a) In addition to the track inspections required by § 213.233, a continuous search for internal defects shall be made of all rail in Classes 4 through 5 track, and Class 3 track over which passenger trains operate, at least once every 40 million gross tons (mgt) or once a year, whichever interval is shorter. On Class 3 track over which passenger trains do not operate such a search shall be made at least once every 30 mgt or once a year, whichever interval is longer. (This paragraph (a) is applicable January 1, 1999.

(b) Inspection equipment shall be capable of detecting defects between joint bars, in the area enclosed by joint bars.

(c) Each defective rail shall be marked with a highly visible marking on both sides of the web and base.

(d) If the person assigned to operate the rail defect detection equipment being used determines that, due to rail surface conditions, a valid search for internal defects could not be made over a particular length of track, the test on that particular length of track cannot be considered as a search for internal defects under paragraph (a) of this section. (This paragraph (d) is not retroactive to tests performed prior to September 21, 1998.

(e) If a valid search for internal defects cannot be conducted for reasons described in paragraph (d) of this section, the track owner shall, before the expiration of time or tonnage limits—

(1) Conduct a valid search for internal defects;

(2) Reduce operating speed to a maximum of 25 miles per hour until such time as a valid search for internal defects can be made; or

(3) Remove the rail from service.

§ 213.239 Special inspections.

In the event of fire, flood, severe storm, or other occurrence which might have damaged track structure, a special inspection shall be made of the track involved as soon as possible after the occurrence and, if possible, before the operation of any train over that track.

§ 213.241 Inspection records.

(a) Each owner of track to which this part applies shall keep a record of each inspection required to be performed on that track under this subpart.

(b) Each record of an inspection under §§ 213.4, 213.119, 213.233, and 213.235 shall be prepared on the day the inspection is made and signed by the person making the inspection. Records shall specify the track inspected, date of inspection, location and nature of any deviation from the requirements of this part, and the remedial action taken by the person making the inspection. The owner shall designate the location(s) where each original record shall be maintained for at least one year after the inspection covered by the record. The owner shall also designate one location, within 100 miles of each state in which they conduct operations, where copies of records which apply to those operations are either maintained or can be viewed following 10 days notice by the Federal Railroad Administration.

(c) Rail inspection records shall specify the date of inspection, the location and nature of any internal defects found, the remedial action taken and the date thereof, and the location of any intervals of track not tested per § 213.237(d). The owner shall retain a rail inspection record for at least two years after the inspection and for one year after remedial action is taken.

(d) Each owner required to keep inspection records under this section shall make those records available for inspection and copying by the Federal Railroad Administration.

(e) For purposes of compliance with the requirements of this section, an owner of track may maintain and transfer records through electronic transmission, storage, and retrieval provided that—

(1) The electronic system be designed so that the integrity of each record is maintained through appropriate levels of security such as recognition of an electronic signature, or other means, which uniquely identify the initiating person as the author of that record. No two persons shall have the same electronic identity;

(2) The electronic storage of each record shall be initiated by the person making the inspection within 24 hours following the completion of that inspection;

(3) The electronic system shall ensure that each record cannot be modified in any way, or replaced, once the record is transmitted and stored;

(4) Any amendment to a record shall be electronically stored apart from the record which it amends. Each amendment to a record shall be uniquely identified as to the person making the amendment;

(5) The electronic system shall provide for the maintenance of inspection records as originally submitted without corruption or loss of data;

(6) Paper copies of electronic records and amendments to those records, that may be necessary to document compliance with this part shall be made available for inspection and copying by the Federal Railroad Administration at the locations specified in paragraph (b) of this section; and

(7) Track inspection records shall be kept available to persons who performed the inspections and to persons performing subsequent inspections.

[63 FR 34029, June 22, 1998, as amended at 70 FR 66298, Nov. 2, 2005]

Subpart G—Train Operations at Track Classes 6 and Higher

§ 213.301 Scope of subpart.

This subpart applies to all track used for the operation of trains at a speed greater than 90 m.p.h. for passenger equipment and greater than 80 m.p.h. for freight equipment.

§ 213.303 Responsibility for compliance.

(a) Any owner of track to which this subpart applies who knows or has notice that the track does not comply with the requirements of this subpart, shall—

(1) Bring the track into compliance; or

(2) Halt operations over that track.

(b) If an owner of track to which this subpart applies assigns responsibility for the track to another person (by lease or otherwise), notification of the assignment shall be provided to the appropriate FRA Regional Office at least 30 days in advance of the assignment. The notification may be made by any party to that assignment, but shall be in writing and include the following—

(1) The name and address of the track owner;

(2) The name and address of the person to whom responsibility is assigned (assignee);

(3) A statement of the exact relationship between the track owner and the assignee;

(4) A precise identification of the track;

(5) A statement as to the competence and ability of the assignee to carry out the duties of the track owner under this subpart;

(6) A statement signed by the assignee acknowledging the assignment to that person of responsibility for purposes of compliance with this subpart.

(c) The Administrator may hold the track owner or the assignee or both responsible for compliance with this subpart and subject to the penalties under § 213.15.

(d) When any person, including a contractor for a railroad or track owner, performs any function required by this part, that person is required to perform that function in accordance with this part.

§ 213.305 Designation of qualified individuals; general qualifications.

Each track owner to which this subpart applies shall designate qualified individuals responsible for the maintenance and inspection of track in compliance with the safety requirements prescribed in this subpart. Each individual, including a contractor or an employee of a contractor who is not a railroad employee, designated to:

(a) Supervise restorations and renewals of track shall meet the following minimum requirements:

(1) At least;

(i) Five years of responsible supervisory experience in railroad track maintenance in track Class 4 or higher and the successful completion of a course offered by the employer or by a college level engineering program, supplemented by special on the job training emphasizing the techniques to be employed in the supervision, restoration, and renewal of high speed track; or

(ii) A combination of at least one year of responsible supervisory experience in track maintenance in Class 4 or higher and the successful completion of a minimum of 80 hours of specialized training in the maintenance of high speed track provided by the employer or by a college level engineering program, supplemented by special on the job training provided by the employer with emphasis on the maintenance of high speed track; or

(iii) A combination of at least two years of experience in track maintenance in track Class 4 or higher and the successful completion of a minimum of 120 hours of specialized training in the maintenance of high speed track provided by the employer or by a college level engineering program supplemented by special on the job training provided by the employer with emphasis on the maintenance of high speed track.

(2) Demonstrate to the track owner that the individual:

(i) Knows and understands the requirements of this subpart;

(ii) Can detect deviations from those requirements; and

(iii) Can prescribe appropriate remedial action to correct or safely compensate for those deviations; and

(3) Be authorized in writing by the track owner to prescribe remedial actions to correct or safely compensate for deviations from the requirements of this subpart and successful completion of a recorded examination on this subpart as part of the qualification process.

(b) Inspect track for defects shall meet the following minimum qualifications:

(1) At least:

(i) Five years of responsible experience inspecting track in Class 4 or above and the successful completion of a course offered by the employer or by a college level engineering program, supplemented by special on the job training emphasizing the techniques to be employed in the inspection of high speed track; or

(ii) A combination of at least one year of responsible experience in track inspection in Class 4 or above and the successful completion of a minimum of 80 hours of specialized training in the inspection of high speed track provided by the employer or by a college level engineering program, supplemented by special on the job training provided by the employer with emphasis on the inspection of high speed track; or

(iii) A combination of at least two years of experience in track maintenance in Class 4 or above and the successful completion of a minimum of 120 hours of specialized training in the inspection of high speed track provided by the employer or from a college level engineering program, supplemented by special on the job training provided by the employer with emphasis on the inspection of high speed track.

(2) Demonstrate to the track owner that the individual:

(i) Knows and understands the requirements of this subpart;

(ii) Can detect deviations from those requirements; and

(iii) Can prescribe appropriate remedial action to correct or safely compensate for those deviations; and

(3) Be authorized in writing by the track owner to prescribe remedial actions to correct or safely compensate for deviations from the requirements in this subpart and successful completion

of a recorded examination on this subpart as part of the qualification process.

(c) Individuals designated under paragraphs (a) or (b) of this section that inspect continuous welded rail (CWR) track or supervise the installation, adjustment, and maintenance of CWR in accordance with the written procedures established by the track owner shall have:

(1) Current qualifications under either paragraph (a) or (b) of this section;

(2) Successfully completed a training course of at least eight hours duration specifically developed for the application of written CWR procedures issued by the track owner; and

(3) Demonstrated to the track owner that the individual:

(i) Knows and understands the requirements of those written CWR procedures;

(ii) Can detect deviations from those requirements; and

(iii) Can prescribe appropriate remedial action to correct or safely compensate for those deviations; and

(4) Written authorization from the track owner to prescribe remedial actions to correct or safely compensate for deviations from the requirements in those procedures and successful completion of a recorded examination on those procedures as part of the qualification process. The recorded examination may be written, or it may be a computer file with the results of an interactive training course.

(d) Persons not fully qualified to supervise certain renewals and inspect track as outlined in paragraphs (a), (b) and (c) of this section, but with at least one year of maintenance of way or signal experience, may pass trains over broken rails and pull aparts provided that—

(1) The track owner determines the person to be qualified and, as part of doing so, trains, examines, and re-examines the person periodically within two years after each prior examination on the following topics as they relate to the safe passage of trains over broken rails or pull aparts: rail defect identification, crosstie condition, track surface and alinement, gage restraint, rail end mismatch, joint bars, and maximum distance between rail ends over which trains may be allowed to pass. The sole purpose of the examination is to ascertain the person's ability to effectively apply these requirements and the examination may not be used to disqualify the person from other duties. A minimum of four hours training is adequate for initial training;

(2) The person deems it safe, and train speeds are limited to a maximum of 10 m.p.h. over the broken rail or pull apart;

(3) The person shall watch all movements over the broken rail or pull apart and be prepared to stop the train if necessary; and

(4) Person(s) fully qualified under § 213.305 of this subpart are notified and dispatched to the location as soon as practicable for the purpose of authorizing movements and effectuating temporary or permanent repairs.

(e) With respect to designations under paragraphs (a), (b), (c) and (d) of this section, each track owner shall maintain written records of:

(1) Each designation in effect;

(2) The basis for each designation, including but not limited to:

(i) The exact nature of any training courses attended and the dates thereof;

(ii) The manner in which the track owner has determined a successful completion of that training course, including test scores or other qualifying results;

(3) Track inspections made by each individual as required by § 213.369. These records shall be made available for inspection and copying by the Federal Railroad Administration during regular business hours.

[63 FR 34029, June 22, 1998; 63 FR 45959, Aug. 28, 1998]

§ 213.307 Class of track: operating speed limits.

(a) Except as provided in paragraph (b) of this section and §§ 213.329, 213.337(a) and 213.345(c), the following maximum allowable operating speeds apply:

Over track that meets all of the requirements prescribed in this subpart for—	The maximum allowable operating speed for trains [1] is—
Class 6 track	110 m.p.h.

Over track that meets all of the requirements prescribed in this subpart for—	The maximum allowable operating speed for trains [1] is—
Class 7 track	125 m.p.h.
Class 8 track	160 m.p.h.[2]
Class 9 track	200 m.p.h.

[1] Freight may be transported at passenger train speeds if the following conditions are met:

(1) The vehicles utilized to carry such freight are of equal dynamic performance and have been qualified in accordance with Sections 213.345 and 213.329(d) of this subpart.

(2) The load distribution and securement in the freight vehicle will not adversely affect the dynamic performance of the vehicle. The axle loading pattern is uniform and does not exceed the passenger locomotive axle loadings utilized in passenger service operating at the same maximum speed.

(3) No carrier may accept or transport a hazardous material, as defined at 49 CFR 171.8, except as provided in Column 9A of the Hazardous Materials Table (49 CFR 172.101) for movement in the same train as a passenger-carrying vehicle or in Column 9B of the Table for movement in a train with no passenger-carrying vehicles.

[2] Operating speeds in excess of 150 m.p.h. are authorized by this part only in conjunction with a rule of particular applicability addressing other safety issues presented by the system.

(b) If a segment of track does not meet all of the requirements for its intended class, it is to be reclassified to the next lower class of track for which it does meet all of the requirements of this subpart. If a segment does not meet all of the requirements for Class 6, the requirements for Classes 1 through 5 apply.

§ 213.309 Restoration or renewal of track under traffic conditions.

(a) Restoration or renewal of track under traffic conditions is limited to the replacement of worn, broken, or missing components or fastenings that do not affect the safe passage of trains.

(b) The following activities are expressly prohibited under traffic conditions:

(1) Any work that interrupts rail continuity, e.g., as in joint bar replacement or rail replacement;

(2) Any work that adversely affects the lateral or vertical stability of the track with the exception of spot tamping an isolated condition where not more than 15 lineal feet of track are involved at any one time and the ambient air temperature is not above 95 degrees Fahrenheit; and

(3) Removal and replacement of the rail fastenings on more than one tie at a time within 15 feet.

§ 213.311 Measuring track not under load.

When unloaded track is measured to determine compliance with requirements of this subpart, evidence of rail movement, if any, that occurs while the track is loaded shall be added to the measurements of the unloaded track.

§ 213.317 Waivers.

(a) Any owner of track to which this subpart applies may petition the Federal Railroad Administrator for a waiver from any or all requirements prescribed in this subpart.

(b) Each petition for a waiver under this section shall be filed in the manner and contain the information required by §§ 211.7 and 211.9 of this chapter.

(c) If the Administrator finds that a waiver is in the public interest and is consistent with railroad safety, the Administrator may grant the waiver subject to any conditions the Administrator deems necessary. Where a waiver is granted, the Administrator publishes a notice containing the reasons for granting the waiver.

§ 213.319 Drainage.

Each drainage or other water carrying facility under or immediately adjacent to the roadbed shall be maintained and kept free of obstruction, to accommodate expected water flow for the area concerned.

§ 213.321 Vegetation.

Vegetation on railroad property which is on or immediately adjacent to roadbed shall be controlled so that it does not—

(a) Become a fire hazard to track-carrying structures;

(b) Obstruct visibility of railroad signs and signals:

(1) Along the right of way, and

(2) At highway-rail crossings;

(c) Interfere with railroad employees performing normal trackside duties;

(d) Prevent proper functioning of signal and communication lines; or

(e) Prevent railroad employees from visually inspecting moving equipment from their normal duty stations.

§ 213.323 Track gage.

(a) Gage is measured between the heads of the rails at right-angles to the rails in a plane five-eighths of an inch below the top of the rail head.

(b) Gage shall be within the limits prescribed in the following table:

Class of track	The gage must be at least—	But not more than—	The change of gage within 31 feet must not be greater than—
6	′8″	4′9¼″	½″
7	4′8″	4′9¼″	½″
8	4′8″	4′9¼″	½″
9	4′8¼″	4′9¼″	½″

§ 213.327 Alinement.

(a) Uniformity at any point along the track is established by averaging the measured mid-chord offset values for nine consecutive points centered around that point and which are spaced according to the following table:

Chord length	Spacing
31′	7′9″
62′	15′6″
124′	31′0″

(b) For a single deviation, alinement may not deviate from uniformity more than the amount prescribed in the following table:

Class of track	The deviation from uniformity of the mid-chord offset for a 31-foot chord may not be more than— (inches)	The deviation from uniformity of the mid-chord offset for a 62-foot chord may not be more than— (inches)	The deviation from uniformity of the mid-chord offset for a 124-foot chord may not be more than— (inches)
6	½	¾	1½
7	½	½	1¼
8	½	½	¾
9	½	½	¾

(c) For three or more non-overlapping deviations from uniformity in track alinement occurring within a distance equal to five times the specified chord length, each of which exceeds the limits in the following table, each owner of the track to which this subpart applies shall maintain the alinement of the track within the limits prescribed for each deviation:

Class of track	The deviation from uniformity of the mid-chord offset for a 31-foot chord may not be more than— (inches)	The deviation from uniformity of the mid-chord offset for a 62-foot chord may not be more than— (inches)	The deviation from uniformity of the mid-chord offset for a 124-foot chord may not be more than— (inches)
6	⅜	½	1
7	⅜	⅜	⅞
8	⅜	⅜	½
9	⅜	⅜	½

§ 213.329 Curves, elevation and speed limitations.

(a) The maximum crosslevel on the outside rail of a curve may not be more than 7 inches. The outside rail of a curve may not be more than ½ inch lower than the inside rail.

(b) (1) The maximum allowable operating speed for each curve is determined by the following formula:

$$V_{max} = \sqrt{\frac{E_a + 3}{0.0007D}}$$

Where—

V_{max} = Maximum allowable operating speed (miles per hour).

E_a = Actual elevation of the outside rail (inches)[4].
D = Degree of curvature (degrees)[5].
3 = 3 inches of unbalance.

(2) Appendix A includes tables showing maximum allowable operating speeds computed in accordance with this formula for various elevations and degrees of curvature for track speeds greater than 90 m.p.h.

(c) For rolling stock meeting the requirements specified in paragraph (d) of this section, the maximum operating speed for each curve may be determined by the following formula:

$$V_{max} = \sqrt{\frac{E_a + E_u}{0.0007D}}$$

Where—

V_{max} = Maximum allowable operating speed (miles per hour).
E_a = Actual elevation of the outside rail (inches)[4].
D = Degree of curvature (degrees)[5].
E_u = Unbalanced elevation (inches).

(d) Qualified equipment may be operated at curving speeds determined by the formula in paragraph (c) of this section, provided each specific class of equipment is approved for operation by the Federal Railroad Administration and the railroad demonstrates that—

(1) When positioned on a track with uniform superelevation, E_a, reflecting the intended target cant deficiency, E_u, no wheel of the equipment unloads to a value of 60 percent or less of its static value on perfectly level track and, for passenger-carrying equipment, the roll angle between the floor of the vehicle and the horizontal does not exceed 5.7 degrees.

(2) When positioned on a track with a uniform 7-inch superelevation, no wheel unloads to a value less than 60% of its static value on perfectly level track and, for passenger-carrying equipment, the angle, measured about the roll axis, between the floor of the vehicle and the horizontal does not exceed 8.6 degrees.

(e) The track owner shall notify the Federal Railroad Administrator no less than thirty calendar days prior to any proposed implementation of the higher curving speeds allowed when the ''E_u'' term, above, will exceed three inches. This notification shall be in writing and shall contain, at a minimum, the following information:

(1) A complete description of the class of equipment involved, including schematic diagrams of the suspension system and the location of the center of gravity above top of rail;

(2) A complete description of the test procedure[6] and instrumentation used to qualify the equipment and the maximum values for wheel unloading and roll angles which were observed during testing;

(3) Procedures or standards in effect which relate to the maintenance of the suspension system for the particular class of equipment;

(4) Identification of line segment on which the higher curving speeds are proposed to be implemented.

(f) A track owner, or an operator of a passenger or commuter service, who provides passenger or commuter service over trackage of more than one track owner with the same class of equipment, may provide written notification to the Federal Railroad Administrator with the written consent of the other affected track owners.

[63 FR 34029, June 22, 1998; 63 FR 46102, Aug. 28, 1998]

§ 213.331 Track surface.

(a) For a single deviation in track surface, each owner of the track to which this subpart applies shall maintain the surface of its track within the

[4] Actual elevation for each 155 foot track segment in the body of the curve is determined by averaging the elevation for 10 points through the segment at 15.5 foot spacing. If the curve length is less than 155 feet, average the points through the full length of the body of the curve. If E_u exceeds 4 inches, the Vmax formula applies to the spirals on both ends of the curve.

[5] Degree of curvature is determined by averaging the degree of curvature over the same track segment as the elevation.

[6] The test procedure may be conducted in a test facility whereby all wheels on one side (right or left) of the equipment are raised or lowered by six and then seven inches, the vertical wheel loads under each wheel are measured and a level is used to record the angle through which the floor of the vehicle has been rotated.

limits prescribed in the following table:

Track surface	Class of track			
	6 (inches)	7 (inches)	8 (inches)	9 (inches)
The deviation from uniform[1] profile on either rail at the midordinate of a 31-foot chord may not be more than	1	1	¾	½
The deviation from uniform profile on either rail at the midordinate of a 62-foot chord may not be more than	1	1	1	¾
The deviation from uniform profile on either rail at the midordinate of a 124-foot chord may not be more than	1¾	1½	1¼	1¼
The difference in crosslevel between any two points less than 62 feet apart may not be more than[2]	1½	1½	1½	1½

[1] Uniformity for profile is established by placing the midpoint of the specified chord at the point of maximum measurement.
[2] However, to control harmonics on jointed track with staggered joints, the crosslevel differences shall not exceed 1¼ inches in all of six consecutive pairs of joints, as created by 7 joints. Track with joints staggered less than 10 feet shall not be considered as having staggered joints. Joints within the 7 low joints outside of the regular joint spacing shall not be considered as joints for purposes of this footnote.

(b) For three or more non-overlapping deviations in track surface occurring within a distance equal to five times the specified chord length, each of which exceeds the limits in the following table, each owner of the track to which this subpart applies shall maintain the surface of the track within the limits prescribed for each deviation:

Track surface	Class of track			
	6 (inches)	7 (inches)	8 (inches)	9 (inches)
The deviation from uniform profile on either rail at the midordinate of a 31-foot chord may not be more than	¾	¾	½	⅜
The deviation from uniform profile on either rail at the midordinate of a 62-foot chord may not be more than	¾	¾	¾	½
The deviation from uniform profile on either rail at the midordinate of a 124-foot chord may not be more than	1¼	1	⅞	⅞

§213.333 Automated vehicle inspection systems.

(a) For track Class 7, a qualifying Track Geometry Measurement System (TGMS) vehicle shall be operated at least twice within 120 calendar days with not less than 30 days between inspections. For track Classes 8 and 9, it shall be operated at least twice within 60 days with not less than 15 days between inspections.

(b) A qualifying TGMS shall meet or exceed minimum design requirements which specify that—

(1) Track geometry measurements shall be taken no more than 3 feet away from the contact point of wheels carrying a vertical load of no less than 10,000 pounds per wheel;

(2) Track geometry measurements shall be taken and recorded on a distance-based sampling interval which shall not exceed 2 feet; and

(3) Calibration procedures and parameters are assigned to the system which assure that measured and recorded values accurately represent track conditions. Track geometry measurements recorded by the system shall not differ on repeated runs at the same site at the same speed more than 1/8 inch.

(c) A qualifying TGMS shall be capable of measuring and processing the necessary track geometry parameters, at an interval of no more than every 2 feet, which enables the system to determine compliance with: §213.323, Track gage; §213.327, Alinement; §213.329, Curves; elevation and speed limitations; and §213.331, Track surface.

(d) A qualifying TGMS shall be capable of producing, within 24 hours of the inspection, output reports that—

(1) Provide a continuous plot, on a constant-distance axis, of all measured track geometry parameters required in paragraph (c) of this section;

(2) Provide an exception report containing a systematic listing of all

track geometry conditions which constitute an exception to the class of track over the segment surveyed.

(e) The output reports required under paragraph (c) of this section shall contain sufficient location identification information which enable field forces to easily locate indicated exceptions.

(f) Following a track inspection performed by a qualifying TGMS, the track owner shall, within two days after the inspection, field verify and institute remedial action for all exceptions to the class of track.

(g) The track owner shall maintain for a period of one year following an inspection performed by a qualifying TGMS, copy of the plot and the exception printout for the track segment involved, and additional records which:

(1) Specify the date the inspection was made and the track segment involved; and

(2) Specify the location, remedial action taken, and the date thereof, for all listed exceptions to the class.

(h) For track Classes 8 and 9, a qualifying Gage Restraint Measurement System (GRMS) shall be operated at least once annually with at least 180 days between inspections to continuously compare loaded track gage to unloaded gage under a known loading condition. The lateral capacity of the track structure shall not permit a gage widening ratio (GWR) greater than 0.5 inches.

(i) A GRMS shall meet or exceed minimum design requirements which specify that—

(1) Gage restraint shall be measured between the heads of the rail—

(i) At an interval not exceeding 16 inches;

(ii) Under an applied vertical load of no less than 10,000 pounds per rail;

(iii) Under an applied lateral load which provides for lateral/vertical load ratio of between 0.5 and 1.25[7], and a load severity greater than 3,000 pounds but less than 8,000 pounds per rail. Load severity is defined by the formula—

$$S = L - cV$$

where:

S = Load severity, defined as the lateral load applied to the fastener system (pounds).

L = Actual lateral load applied (pounds).

c = Coefficient of friction between rail/tie which is assigned a nominal value of (0.4).

V = Actual vertical load applied (pounds).

(2) The measured gage value shall be converted to a gage widening ratio (GWR) as follows:

$$GWR = \frac{(LTG - UTG)}{L} \times 16{,}000$$

Where:

UTG=Unloaded track gage measured by the GRMS vehicle at a point no less than 10 feet from any lateral or vertical load application.

LTG=Loaded track gage measured by the GRMS vehicle at the point of application of the lateral load.

L=Actual lateral load applied (pounds).

(j) At least one vehicle in one train per day operating in Classes 8 and 9 shall be equipped with functioning on-board truck frame and carbody accelerometers. Each track owner shall have in effect written procedures for the notification of track personnel when on-board accelerometers on trains in Classes 8 and 9 indicate a possible track-related condition.

(k) For track Classes 7 , 8 and 9, an instrumented car having dynamic response characteristics that are representative of other equipment assigned to service or a portable device that monitors on-board instrumentation on trains shall be operated over the track at the revenue speed profile at a frequency of at least twice within 60 days with not less than 15 days between inspections. The instrumented car or the portable device shall monitor vertically and laterally oriented accelerometers placed near the end of the vehicle at the floor level. In addition, accelerometers shall be mounted on the truck frame. If the carbody lateral, carbody vertical, or truck frame lateral safety limits in the following table of vehicle/track interaction safety limits are exceeded, speeds will be reduced until these safety limits are not exceeded.

[7] GRMS equipment using load combinations developing L/V ratios which exceed 0.8 shall be operated with caution to protect against the risk of wheel climb by the test wheelset.

(l) For track Classes 8 and 9, an instrumented car having dynamic response characteristics that are representative of other equipment assigned to service shall be operated over the track at the revenue speed profile annually with not less than 180 days between inspections. The instrumented car shall be equipped with functioning instrumented wheelsets to measure wheel/rail forces. If the wheel/rail force limits in the following table of vehicle/track interaction safety limits are exceeded, speeds will be reduced until these safety limits are not exceeded.

(m) The track owner shall maintain a copy of the most recent exception printouts for the inspections required under paragraphs (k) and (l) of this section.

Vehicle/Track Interaction Safety Limits

Parameter	Safety Limit	Filter/ Window	Requirements
Wheel/Rail Forces[1]			
Single Wheel Vertical Load Ratio	≥ 0.1	5 ft	No wheel of the equipment shall be permitted to unload to less than 10% of the static vertical wheel load. The static vertical wheel load is defined as the load that the wheel would carry when stationary on level track. The vertical wheel load limit shall be increased by the amount of measurement error.
Single Wheel L/V Ratio	$\leq \frac{\tan\delta - .5}{1 + .5\tan\delta}$	5 ft	The ratio of the lateral force that any wheel exerts on an individual rail to the vertical force exerted by the same wheel on the rail shall be less than the safety limit calculated for the wheel's flange angle (δ).
Net Axle L/V Ratio	≤ 0.5	5 ft	The net lateral force exerted by any axle on the track shall not exceed 50% of the static vertical load that the axle exerts on the track.
Truck Side L/V Ratio	≤ 0.6	5 ft	The ratio of the lateral forces that the wheels on one side of any truck exert on an individual rail to the vertical forces exerted by the same wheels on that rail shall be less than 0.6.
Accelerations			
Carbody Lateral[2]	≤ 0.5 g peak-to-peak	10 Hz 1 sec window	The peak-to-peak accelerations, measured as the algebraic difference between the two extreme values of measured acceleration in a one second time period, shall not exceed 0.5 g.
Carbody Vertical[2]	≤ 0.6 g peak-to-peak	10 Hz 1 sec window	The peak-to-peak accelerations, measured as the algebraic difference between the two extreme values of measured acceleration in a one-second time period, shall not exceed 0.6 g.
Truck Lateral[3]	≤ 0.4 g RMS mean-removed	10 Hz 2 sec window	Truck hunting[4] shall not develop below the maximum authorized speed.

[1] The lateral and vertical wheel forces shall be measured with instrumented wheelsets with the measurements processed through a low pass filter with a minimum cut-off frequency of 25 Hz. The sample rate for wheel force data shall be at least 250 samples/sec.

[2] Carbody lateral and vertical accelerations shall be measured near the car ends at the floor level.

[3] Truck accelerations in the lateral direction shall be measured on the truck frame. The measurements shall be processed through a filter having a pass band of 0.5 to 10 Hz.

[4] Truck hunting is defined as a sustained cyclic oscillation of the truck which is evidenced by lateral accelerations in excess of 0.4 g root mean square (mean-removed) for 2 seconds.

[63 FR 34029, June 22, 1998; 63 FR 46102, Aug. 28, 1998]

§ 213.334 Ballast; general.

Unless it is otherwise structurally supported, all track shall be supported by material which will—

(a) Transmit and distribute the load of the track and railroad rolling equipment to the subgrade;

(b) Restrain the track laterally, longitudinally, and vertically under dynamic loads imposed by railroad rolling equipment and thermal stress exerted by the rails;

(c) Provide adequate drainage for the track; and

(d) Maintain proper track crosslevel, surface, and alinement.

§ 213.335 Crossties.

(a) Crossties shall be made of a material to which rail can be securely fastened.

(b) Each 39 foot segment of track shall have—

(1) A sufficient number of crossties which in combination provide effective support that will—

(i) Hold gage within the limits prescribed in § 213.323(b);

(ii) Maintain surface within the limits prescribed in § 213.331; and

(iii) Maintain alinement within the limits prescribed in § 213.327.

(2) The minimum number and type of crossties specified in paragraph (c) of this section effectively distributed to support the entire segment; and

(3) Crossties of the type specified in paragraph (c) of this section that are(is) located at a joint location as specified in paragraph (e) of this section.

(c) For non-concrete tie construction, each 39 foot segment of Class 6 track shall have fourteen crossties; Classes 7, 8 and 9 shall have 18 crossties which are not—

(1) Broken through;

(2) Split or otherwise impaired to the extent the crossties will allow the ballast to work through, or will not hold spikes or rail fasteners;

(3) So deteriorated that the tie plate or base of rail can move laterally ⅜ inch relative to the crossties;

(4) Cut by the tie plate through more than 40 percent of a crosstie's thickness;

(5) Configured with less than 2 rail holding spikes or fasteners per tie plate; or

(6) So unable, due to insufficient fastener toeload, to maintain longitudinal restraint and maintain rail hold down and gage.

(d) For concrete tie construction, each 39 foot segment of Class 6 track shall have fourteen crossties, Classes 7, 8 and 9 shall have 16 crossties which are not—

(1) So deteriorated that the prestress strands are ineffective or withdrawn into the tie at one end and the tie exhibits structural cracks in the rail seat or in the gage of track;

(2) Configured with less than 2 fasteners on the same rail;

(3) So deteriorated in the vicinity of the rail fastener such that the fastener assembly may pull out or move laterally more than ⅜ inch relative to the crosstie;

(4) So deteriorated that the fastener base plate or base of rail can move laterally more than ⅜ inch relative to the crossties;

(5) So deteriorated that rail seat abrasion is sufficiently deep so as to cause loss of rail fastener toeload;

(6) Completely broken through; or

(7) So unable, due to insufficient fastener toeload, to maintain longitudinal restraint and maintain rail hold down and gage.

(e) Class 6 track shall have one non-defective crosstie whose centerline is within 18 inches of the rail joint location or two crossties whose center lines are within 24 inches either side of the rail joint location. Class 7, 8, and 9 track shall have two non-defective ties within 24 inches each side of the rail joint.

(f) For track constructed without crossties, such as slab track and track connected directly to bridge structural components, the track structure shall meet the requirements of paragraphs (b)(1)(i), (ii), and (iii) of this section.

(g) In Classes 7, 8 and 9 there shall be at least three non-defective ties each side of a defective tie.

(h) Where timber crossties are in use there shall be tie plates under the running rails on at least nine of 10 consecutive ties.

(i) No metal object which causes a concentrated load by solely supporting a rail shall be allowed between the base of the rail and the bearing surface of the tie plate.

§213.337 Defective rails.

(a) When an owner of track to which this part applies learns, through inspection or otherwise, that a rail in that track contains any of the defects listed in the following table, a person designated under §213.305 shall determine whether or not the track may continue in use. If the person determines that the track may continue in use, operation over the defective rail is not permitted until—

(1) The rail is replaced; or

(2) The remedial action prescribed in the table is initiated—

REMEDIAL ACTION

Defect	Length of defect (inch)		Percent of rail head cross-sectional area weakened by defect		If defective rail is not replaced, take the remedial action prescribed in note
	More than	But not more than	Less than	But not less than	
Transverse fissure			70 100	5 70 100	B. A2. A.
Compound fissure			70 100	5 70 100	B. A2. A.
Detail fracture Engine burn fracture Defective weld			25 80 100	5 25 80 100	C. D. [A2] or[E and H]. [A] or [E and H].
Horizontal split head Vertical split head Split web Piped rail Head web separation	1 2 4 (1)	2 4 ..... (1)	.... (1)	....	H and F. I and G. B. A.
Bolt hole crack	½ 1 1½ (1)	1 1½ ..... (1)	.... (1)	....	H and F. H and G. B. A.
Broken base	1 6	6	....	....	D. [A] or [E and I].
Ordinary break	.....	.....	.....	.....	A or E.
Damaged rail	.....	.....	.....	.....	D.
Flattened rail	Depth > ⅜ and Length > 8	.....	.....	.....	H.

(1) Break out in rail head.

NOTES: A. Assign person designated under §213.305 to visually supervise each operation over defective rail.

A2. Assign person designated under §213.305 to make visual inspection. That person may authorize operation to continue without visual supervision at a maximum of 10 m.p.h.

for up to 24 hours prior to another such visual inspection or replacement or repair of the rail.

B. Limit operating speed over defective rail to that as authorized by a person designated under §213.305(a)(1)(i) or (ii). The operating speed cannot be over 30 m.p.h.

C. Apply joint bars bolted only through the outermost holes to defect within 20 days after it is determined to continue the track in use. Limit operating speed over defective rail to 30 m.p.h. until joint bars are applied; thereafter, limit speed to 50 m.p.h. When a search for internal rail defects is conducted under §213.339 and defects are discovered which require remedial action C, the operating speed shall be limited to 50 m.p.h., for a period not to exceed 4 days. If the defective rail has not been removed from the track or a permanent repair made within 4 days of the discovery, limit operating speed over the defective rail to 30 m.p.h. until joint bars are applied; thereafter, limit speed to 50 m.p.h.

D. Apply joint bars bolted only through the outermost holes to defect within 10 days after it is determined to continue the track in use. Limit operating speed over the defective rail to 30 m.p.h. or less as authorized by a person designated under §213.305(a)(1)(i) or (ii) until joint bars are applied; thereafter, limit speed to 50 m.p.h.

E. Apply joint bars to defect and bolt in accordance with §213.351(d) and (e).

F. Inspect rail 90 days after it is determined to continue the track in use.

G. Inspect rail 30 days after it is determined to continue the track in use.

H. Limit operating speed over defective rail to 50 m.p.h.

I. Limit operating speed over defective rail to 30 m.p.h.

(b) As used in this section—

(1) *Transverse fissure* means a progressive crosswise fracture starting from a crystalline center or nucleus inside the head from which it spreads outward as a smooth, bright, or dark, round or oval surface substantially at a right angle to the length of the rail. The distinguishing features of a transverse fissure from other types of fractures or defects are the crystalline center or nucleus and the nearly smooth surface of the development which surrounds it.

(2) *Compound fissure* means a progressive fracture originating in a horizontal split head which turns up or down in the head of the rail as a smooth, bright, or dark surface progressing until substantially at a right angle to the length of the rail. Compound fissures require examination of both faces of the fracture to locate the horizontal split head from which they originate.

(3) *Horizontal split head* means a horizontal progressive defect originating inside of the rail head, usually one-quarter inch or more below the running surface and progressing horizontally in all directions, and generally accompanied by a flat spot on the running surface. The defect appears as a crack lengthwise of the rail when it reaches the side of the rail head.

(4) *Vertical split head* means a vertical split through or near the middle of the head, and extending into or through it. A crack or rust streak may show under the head close to the web or pieces may be split off the side of the head.

(5) *Split web* means a lengthwise crack along the side of the web and extending into or through it.

(6) *Piped rail* means a vertical split in a rail, usually in the web, due to failure of the shrinkage cavity in the ingot to unite in rolling.

(7) *Broken base* means any break in the base of the rail.

(8) *Detail fracture* means a progressive fracture originating at or near the surface of the rail head. These fractures should not be confused with transverse fissures, compound fissures, or other defects which have internal origins. Detail fractures may arise from shelly spots, head checks, or flaking.

(9) *Engine burn fracture* means a progressive fracture originating in spots where driving wheels have slipped on top of the rail head. In developing downward they frequently resemble the compound or even transverse fissures with which they should not be confused or classified.

(10) *Ordinary break* means a partial or complete break in which there is no sign of a fissure, and in which none of the other defects described in this paragraph (b) are found.

(11) *Damaged rail* means any rail broken or injured by wrecks, broken, flat, or unbalanced wheels, slipping, or similar causes.

(12) *Flattened rail* means a short length of rail, not a joint, which has flattened out across the width of the rail head to a depth of ⅜ inch or more below the rest of the rail. Flattened

rail occurrences have no repetitive regularity and thus do not include corrugations, and have no apparent localized cause such as a weld or engine burn. Their individual length is relatively short, as compared to a condition such as head flow on the low rail of curves.

(13) *Bolt hole crack* means a crack across the web, originating from a bolt hole, and progressing on a path either inclined upward toward the rail head or inclined downward toward the base. Fully developed bolt hole cracks may continue horizontally along the head/web or base/web fillet, or they may progress into and through the head or base to separate a piece of the rail end from the rail. Multiple cracks occurring in one rail end are considered to be a single defect. However, bolt hole cracks occurring in adjacent rail ends within the same joint shall be reported as separate defects.

(14) *Defective weld* means a field or plant weld containing any discontinuities or pockets, exceeding 5 percent of the rail head area individually or 10 percent in the aggregate, oriented in or near the transverse plane, due to incomplete penetration of the weld metal between the rail ends, lack of fusion between weld and rail end metal, entrainment of slag or sand, under-bead or other shrinkage cracking, or fatigue cracking. Weld defects may originate in the rail head, web, or base, and in some cases, cracks may progress from the defect into either or both adjoining rail ends.

(15) *Head and web separation* means a progressive fracture, longitudinally separating the head from the web of the rail at the head fillet area.

[63 FR 34029, June 22, 1998; 63 FR 51638, Sept. 28, 1998]

§ 213.339 Inspection of rail in service.

(a) A continuous search for internal defects shall be made of all rail in track at least twice annually with not less than 120 days between inspections.

(b) Inspection equipment shall be capable of detecting defects between joint bars, in the area enclosed by joint bars.

(c) Each defective rail shall be marked with a highly visible marking on both sides of the web and base.

(d) If the person assigned to operate the rail defect detection equipment being used determines that, due to rail surface conditions, a valid search for internal defects could not be made over a particular length of track, the test on that particular length of track cannot be considered as a search for internal defects under § 213.337(a).

(e) If a valid search for internal defects cannot be conducted for reasons described in paragraph (d) of this section, the track owner shall, before the expiration of time limits—

(1) Conduct a valid search for internal defects;

(2) Reduce operating speed to a maximum of 25 miles per hour until such time as a valid search for internal defects can be made; or

(3) Remove the rail from service.

§ 213.341 Initial inspection of new rail and welds.

The track owner shall provide for the initial inspection of newly manufactured rail, and for initial inspection of new welds made in either new or used rail. A track owner may demonstrate compliance with this section by providing for:

(a) *In-service inspection*—A scheduled periodic inspection of rail and welds that have been placed in service, if conducted in accordance with the provisions of § 213.339, and if conducted not later than 90 days after installation, shall constitute compliance with paragraphs (b) and (c) of this section;

(b) *Mill inspection*—A continuous inspection at the rail manufacturer's mill shall constitute compliance with the requirement for initial inspection of new rail, provided that the inspection equipment meets the applicable requirements specified in § 213.339. The track owner shall obtain a copy of the manufacturer's report of inspection and retain it as a record until the rail receives its first scheduled inspection under § 213.339;

(c) *Welding plant inspection*—A continuous inspection at a welding plant, if conducted in accordance with the provisions of paragraph (b) of this section, and accompanied by a plant operator's report of inspection which is retained as a record by the track owner, shall

constitute compliance with the requirements for initial inspection of new rail and plant welds, or of new plant welds made in used rail; and

(d) *Inspection of field welds*—An initial inspection of field welds, either those joining the ends of CWR strings or those made for isolated repairs, shall be conducted not less than one day and not more than 30 days after the welds have been made. The initial inspection may be conducted by means of portable test equipment. The track owner shall retain a record of such inspections until the welds receive their first scheduled inspection under § 213.339.

(e) Each defective rail found during inspections conducted under paragraph (a) or (d) of this section shall be marked with highly visible markings on both sides of the web and base and the remedial action as appropriate under § 213.337 will apply.

§ 213.343 Continuous welded rail (CWR).

Each track owner with track constructed of CWR shall have in effect and comply with written procedures which address the installation, adjustment, maintenance and inspection of CWR, and a training program for the application of those procedures, which shall be submitted to the Federal Railroad Administration by March 21, 1999. FRA reviews each plan for compliance with the following—

(a) Procedures for the installation and adjustment of CWR which include—

(1) Designation of a desired rail installation temperature range for the geographic area in which the CWR is located; and

(2) De-stressing procedures/methods which address proper attainment of the desired rail installation temperature range when adjusting CWR.

(b) Rail anchoring or fastening requirements that will provide sufficient restraint to limit longitudinal rail and crosstie movement to the extent practical, and specifically addressing CWR rail anchoring or fastening patterns on bridges, bridge approaches, and at other locations where possible longitudinal rail and crosstie movement associated with normally expected train-induced forces, is restricted.

(c) Procedures which specifically address maintaining a desired rail installation temperature range when cutting CWR including rail repairs, in-track welding, and in conjunction with adjustments made in the area of tight track, a track buckle, or a pull-apart. Rail repair practices shall take into consideration existing rail temperature so that—

(1) When rail is removed, the length installed shall be determined by taking into consideration the existing rail temperature and the desired rail installation temperature range; and

(2) Under no circumstances should rail be added when the rail temperature is below that designated by paragraph (a)(1) of this section, without provisions for later adjustment.

(d) Procedures which address the monitoring of CWR in curved track for inward shifts of alinement toward the center of the curve as a result of disturbed track.

(e) Procedures which control train speed on CWR track when—

(1) Maintenance work, track rehabilitation, track construction, or any other event occurs which disturbs the roadbed or ballast section and reduces the lateral and/or longitudinal resistance of the track; and

(2) In formulating the procedures under this paragraph (e), the track owner shall—

(i) Determine the speed required, and the duration and subsequent removal of any speed restriction based on the restoration of the ballast, along with sufficient ballast re-consolidation to stabilize the track to a level that can accommodate expected train-induced forces. Ballast re-consolidation can be achieved through either the passage of train tonnage or mechanical stabilization procedures, or both; and

(ii) Take into consideration the type of crossties used.

(f) Procedures which prescribe when physical track inspections are to be performed to detect buckling prone conditions in CWR track. At a minimum, these procedures shall address inspecting track to identify—

(1) Locations where tight or kinky rail conditions are likely to occur;

(2) Locations where track work of the nature described in paragraph (e)(1) of

this section have recently been performed; and

(3) In formulating the procedures under this paragraph (f), the track owner shall—

(i) Specify the timing of the inspection; and

(ii) Specify the appropriate remedial actions to be taken when buckling prone conditions are found.

(g) The track owner shall have in effect a comprehensive training program for the application of these written CWR procedures, with provisions for periodic re-training, for those individuals designated under § 213.305(c) of this part as qualified to supervise the installation, adjustment, and maintenance of CWR track and to perform inspections of CWR track.

(h) The track owner shall prescribe recordkeeping requirements necessary to provide an adequate history of track constructed with CWR. At a minimum, these records shall include:

(1) Rail temperature, location and date of CWR installations. This record shall be retained for at least one year; and

(2) A record of any CWR installation or maintenance work that does not conform with the written procedures. Such record shall include the location of the rail and be maintained until the CWR is brought into conformance with such procedures.

(i) As used in this section—

(1) *Adjusting/de-stressing* means the procedure by which a rail's temperature is re-adjusted to the desired value. It typically consists of cutting the rail and removing rail anchoring devices, which provides for the necessary expansion and contraction, and then reassembling the track.

(2) *Buckling incident* means the formation of a lateral mis-alinement sufficient in magnitude to constitute a deviation of 5 inches measured with a 62-foot chord. These normally occur when rail temperatures are relatively high and are caused by high longitudinal compressive forces.

(3) *Continuous welded rail (CWR)* means rail that has been welded together into lengths exceeding 400 feet.

(4) *Desired rail installation temperature range* means the rail temperature range, within a specific geographical area, at which forces in CWR should not cause a buckling incident in extreme heat, or a pull-apart during extreme cold weather.

(5) *Disturbed track* means the disturbance of the roadbed or ballast section, as a result of track maintenance or any other event, which reduces the lateral or longitudinal resistance of the track, or both.

(6) *Mechanical stabilization* means a type of procedure used to restore track resistance to disturbed track following certain maintenance operations. This procedure may incorporate dynamic track stabilizers or ballast consolidators, which are units of work equipment that are used as a substitute for the stabilization action provided by the passage of tonnage trains.

(7) *Rail anchors* means those devices which are attached to the rail and bear against the side of the crosstie to control longitudinal rail movement. Certain types of rail fasteners also act as rail anchors and control longitudinal rail movement by exerting a downward clamping force on the upper surface of the rail base.

(8) *Rail temperature* means the temperature of the rail, measured with a rail thermometer.

(9) *Tight/kinky rail* means CWR which exhibits minute alinement irregularities which indicate that the rail is in a considerable amount of compression.

(10) *Train-induced forces* means the vertical, longitudinal, and lateral dynamic forces which are generated during train movement and which can contribute to the buckling potential.

(11) *Track lateral resistance* means the resistance provided to the rail/crosstie structure against lateral displacement.

(12) *Track longitudinal resistance* means the resistance provided by the rail anchors/rail fasteners and the ballast section to the rail/crosstie structure against longitudinal displacement.

(j) Track owners shall revise their CWR plans to include provisions for the inspection of joint bars in accordance with §§ 213.119(g) and (i)(3).

[63 FR 34029, June 22, 1998; 63 FR 45959, Aug. 28, 1998, as amended at 70 FR 66298, Nov. 2, 2005]

§ 213.345 Vehicle qualification testing.

(a) All rolling stock types which operate at Class 6 speeds and above shall be qualified for operation for their intended track classes in order to demonstrate that the vehicle dynamic response to track alinement and geometry variations are within acceptable limits to assure safe operation. Rolling stock operating in Class 6 within one year prior to the promulgation of this subpart shall be considered as being successfully qualified for Class 6 track and vehicles presently operating at Class 7 speeds by reason of conditional waivers shall be considered as qualified for Class 7.

(b) The qualification testing shall ensure that, at any speed less than 10 m.p.h. above the proposed maximum operating speed, the equipment will not exceed the wheel/rail force safety limits and the truck lateral accelerations specified in § 213.333, and the testing shall demonstrate the following:

(1) The vertical acceleration, as measured by a vertical accelerometer mounted on the car floor, shall be limited to no greater than 0.55g single event, peak-to-peak.

(2) The lateral acceleration, as measured by a lateral accelerometer mounted on the car floor, shall be limited to no greater than 0.3g single event, peak-to-peak; and

(3) The combination of the lateral acceleration (L) and the vertical acceleration (V) within any period of two consecutive seconds as expressed by the square root of ($V^2 + L^2$) shall be limited to no greater than 0.604, where L may not exceed 0.3g and V may not exceed 0.55g.

(c) To obtain the test data necessary to support the analysis required in paragraphs (a) and (b) of this section, the track owner shall have a test plan which shall consider the operating practices and conditions, signal system, road crossings and trains on adjacent tracks during testing. The track owner shall establish a target maximum testing speed (at least 10 m.p.h. above the maximum proposed operating speed) and target test and operating conditions and conduct a test program sufficient to evaluate the operating limits of the track and equipment. The test program shall demonstrate vehicle dynamic response as speeds are incrementally increased from acceptable Class 6 limits to the target maximum test speeds. The test shall be suspended at that speed where any of the safety limits specified in paragraph (b) are exceeded.

(d) At the end of the test, when maximum safe operating speed is known along with permissible levels of cant deficiency, an additional run shall be made with the subject equipment over the entire route proposed for revenue service at the speeds the railroad will request FRA to approve for such service and a second run again at 10 m.p.h. above this speed. A report of the test procedures and results shall be submitted to FRA upon the completions of the tests. The test report shall include the design flange angle of the equipment which shall be used for the determination of the lateral to vertical wheel load safety limit for the track/vehicle interaction safety measurements required per § 213.333(l).

(e) As part of the submittal required in paragraph (d) of the section, the operator shall include an analysis and description of the signal system and operating practices to govern operations in Classes 7 and 8. This statement shall include a statement of sufficiency in these areas for the class of operation. Operation at speeds in excess of 150 m.p.h. is authorized only in conjunction with a rule of particular applicability addressing other safety issues presented by the system.

(f) Based on test results and submissions, FRA will approve a maximum train speed and value of cant deficiency for revenue service.

[63 FR 34029, June 22, 1998; 63 FR 54078, Oct. 8, 1998]

§ 213.347 Automotive or railroad crossings at grade.

(a) There shall be no at-grade (level) highway crossings, public or private, or rail-to-rail crossings at-grade on Class 8 and 9 track.

(b) If train operation is projected at Class 7 speed for a track segment that will include rail-highway grade crossings, the track owner shall submit for FRA's approval a complete description of the proposed warning/barrier system to address the protection of highway

traffic and high speed trains. Trains shall not operate at Class 7 speeds over any track segment having highway-rail grade crossings unless:

(1) An FRA-approved warning/barrier system exists on that track segment; and

(2) All elements of that warning/barrier system are functioning.

§ 213.349 Rail end mismatch.

Any mismatch of rails at joints may not be more than that prescribed by the following table—

Class of track	Any mismatch of rails at joints may not be more than the following—	
	On the tread of the rail ends (inch)	On the gage side of the rail ends (inch)
Class 6, 7, 8 and 9	1/8	1/8

§ 213.351 Rail joints.

(a) Each rail joint, insulated joint, and compromise joint shall be of a structurally sound design and dimensions for the rail on which it is applied.

(b) If a joint bar is cracked, broken, or because of wear allows excessive vertical movement of either rail when all bolts are tight, it shall be replaced.

(c) If a joint bar is cracked or broken between the middle two bolt holes it shall be replaced.

(d) Each rail shall be bolted with at least two bolts at each joint.

(e) Each joint bar shall be held in position by track bolts tightened to allow the joint bar to firmly support the abutting rail ends and to allow longitudinal movement of the rail in the joint to accommodate expansion and contraction due to temperature variations. When no-slip, joint-to-rail contact exists by design, the requirements of this section do not apply. Those locations, when over 400 feet long, are considered to be continuous welded rail track and shall meet all the requirements for continuous welded rail track prescribed in this subpart.

(f) No rail shall have a bolt hole which is torch cut or burned.

(g) No joint bar shall be reconfigured by torch cutting.

§ 213.352 Torch cut rail.

(a) Except as a temporary repair in emergency situations no rail having a torch cut end shall be used. When a rail end with a torch cut is used in emergency situations, train speed over that rail shall not exceed the maximum allowable for Class 2 track. All torch cut rail ends in Class 6 shall be removed within six months of September 21, 1998.

(b) Following the expiration of the time limits specified in paragraph (a) of this section, any torch cut rail end not removed shall be removed within 30 days of discovery. Train speed over that rail shall not exceed the maximum allowable for Class 2 track until removed.

§ 213.353 Turnouts, crossovers, and lift rail assemblies or other transition devices on moveable bridges.

(a) In turnouts and track crossings, the fastenings must be intact and maintained so as to keep the components securely in place. Also, each switch, frog, and guard rail shall be kept free of obstructions that may interfere with the passage of wheels. Use of rigid rail crossings at grade is limited per § 213.347.

(b) Track shall be equipped with rail anchoring through and on each side of track crossings and turnouts, to restrain rail movement affecting the position of switch points and frogs. Elastic fasteners designed to restrict longitudinal rail movement are considered rail anchoring.

(c) Each flangeway at turnouts and track crossings shall be at least 1½ inches wide.

(d) For all turnouts and crossovers, and lift rail assemblies or other transition devices on moveable bridges, the track owner shall prepare an inspection and maintenance Guidebook for use by railroad employees which shall be submitted to the Federal Railroad

Administration. The Guidebook shall contain at a minimum—

(1) Inspection frequency and methodology including limiting measurement values for all components subject to wear or requiring adjustment.

(2) Maintenance techniques.

(e) Each hand operated switch shall be equipped with a redundant operating mechanism for maintaining the security of switch point position.

§ 213.355 Frog guard rails and guard faces; gage.

The guard check and guard face gages in frogs shall be within the limits prescribed in the following table—

Class of track	Guard check gage—The distance between the gage line of a frog to the guard line [1] of its guard rail or guarding face, measured across the track at right angles to the gage line, [2] may not be less than—	Guard face gage—The distance between guard lines, [1] measured across the track at right angles to the gage line, [2] may not be more than—
Class 6 track	4′6½″	4′5″
Class 7 track	4′6½″	4′5″
Class 8 track	4′6½″	4′5″
Class 9 track	4′6½″	4′ 5″

[1] A line along that side of the flangeway which is nearer to the center of the track and at the same elevation as the gage line.
[2] A line ⅝ inch below the top of the center line of the head of the running rail, or corresponding location of the tread portion of the track structure.

§ 213.357 Derails.

(a) Each track, other than a main track, which connects with a Class 7, 8 or 9 main track shall be equipped with a functioning derail of the correct size and type, unless railroad equipment on the track, because of grade characteristics cannot move to foul the main track.

(b) For the purposes of this section, a derail is a device which will physically stop or divert movement of railroad rolling stock or other railroad on-track equipment past the location of the device.

(c) Each derail shall be clearly visible. When in a locked position, a derail shall be free of any lost motion which would prevent it from performing its intended function.

(d) Each derail shall be maintained to function as intended.

(e) Each derail shall be properly installed for the rail to which it is applied.

(f) If a track protected by a derail is occupied by standing railroad rolling stock, the derail shall be in derailing position.

(g) Each derail on a track which is connected to a Class 7, 8 or 9 main track shall be interconnected with the signal system.

§ 213.359 Track stiffness.

(a) Track shall have a sufficient vertical strength to withstand the maximum vehicle loads generated at maximum permissible train speeds, cant deficiencies and surface defects. For purposes of this section, vertical track strength is defined as the track capacity to constrain vertical deformations so that the track shall return following maximum load to a configuration in compliance with the vehicle/track interaction safety limits and geometry requirements of this subpart.

(b) Track shall have sufficient lateral strength to withstand the maximum thermal and vehicle loads generated at maximum permissible train speeds, cant deficiencies and lateral alinement defects. For purposes of this section lateral track strength is defined as the track capacity to constrain lateral deformations so that track shall return following maximum load to a configuration in compliance with the vehicle/track interaction safety limits and geometry requirements of this subpart.

§ 213.361 Right of way.

The track owner in Class 8 and 9 shall submit a barrier plan, termed a ''right-of-way plan,'' to the Federal Railroad Administration for approval. At a minimum, the plan will contain provisions in areas of demonstrated need for the prevention of—

(a) Vandalism;

(b) Launching of objects from overhead bridges or structures into the path of trains; and

(c) Intrusion of vehicles from adjacent rights of way.

§ 213.365 Visual inspections.

(a) All track shall be visually inspected in accordance with the schedule prescribed in paragraph (c) of this section by a person designated under § 213.305.

(b) Each inspection shall be made on foot or by riding over the track in a vehicle at a speed that allows the person making the inspection to visually inspect the track structure for compliance with this part. However, mechanical, electrical, and other track inspection devices may be used to supplement visual inspection. If a vehicle is used for visual inspection, the speed of the vehicle may not be more than 5 miles per hour when passing over track crossings and turnouts, otherwise, the inspection vehicle speed shall be at the sole discretion of the inspector, based on track conditions and inspection requirements. When riding over the track in a vehicle, the inspection will be subject to the following conditions—

(1) One inspector in a vehicle may inspect up to two tracks at one time provided that the inspector's visibility remains unobstructed by any cause and that the second track is not centered more than 30 feet from the track upon which the inspector is riding;

(2) Two inspectors in one vehicle may inspect up to four tracks at a time provided that the inspector's visibility remains unobstructed by any cause and that each track being inspected is centered within 39 feet from the track upon which the inspectors are riding;

(3) Each main track is actually traversed by the vehicle or inspected on foot at least once every two weeks, and each siding is actually traversed by the vehicle or inspected on foot at least once every month. On high density commuter railroad lines where track time does not permit an on track vehicle inspection, and where track centers are 15 foot or less, the requirements of this paragraph (b)(3) will not apply; and

(4) Track inspection records shall indicate which track(s) are traversed by the vehicle or inspected on foot as outlined in paragraph (b)(3) of this section.

(c) Each track inspection shall be made in accordance with the following schedule—

Class of track	Required frequency
6, 7, and 8	Twice weekly with at least 2 calendar-day's interval between inspections.
9	Three times per week.

(d) If the person making the inspection finds a deviation from the requirements of this part, the person shall immediately initiate remedial action.

(e) Each switch, turnout, track crossing, and lift rail assemblies on moveable bridges shall be inspected on foot at least weekly. The inspection shall be accomplished in accordance with the Guidebook required under § 213.353.

(f) In track Classes 8 and 9, if no train traffic operates for a period of eight hours, a train shall be operated at a speed not to exceed 100 miles per hour over the track before the resumption of operations at the maximum authorized speed.

[63 FR 34029, June 22, 1998; 63 FR 45959, Aug. 28, 1998]

§ 213.367 Special inspections.

In the event of fire, flood, severe storm, temperature extremes or other occurrence which might have damaged track structure, a special inspection shall be made of the track involved as soon as possible after the occurrence and, if possible, before the operation of any train over that track.

§ 213.369 Inspection records.

(a) Each owner of track to which this part applies shall keep a record of each inspection required to be performed on that track under this subpart.

(b) Except as provided in paragraph (e) of this section, each record of an inspection under § 213.365 shall be prepared on the day the inspection is made and signed by the person making the inspection. Records shall specify the track inspected, date of inspection, location and nature of any deviation from the requirements of this part, and

the remedial action taken by the person making the inspection. The owner shall designate the location(s) where each original record shall be maintained for at least one year after the inspection covered by the record. The owner shall also designate one location, within 100 miles of each state in which they conduct operations, where copies of record which apply to those operations are either maintained or can be viewed following 10 days notice by the Federal Railroad Administration.

(c) Rail inspection records shall specify the date of inspection, the location and nature of any internal defects found, the remedial action taken and the date thereof, and the location of any intervals of track not tested per §213.339(d). The owner shall retain a rail inspection record for at least two years after the inspection and for one year after remedial action is taken.

(d) Each owner required to keep inspection records under this section shall make those records available for inspection and copying by the Federal Railroad Administrator.

(e) For purposes of compliance with the requirements of this section, an owner of track may maintain and transfer records through electronic transmission, storage, and retrieval provided that—

(1) The electronic system be designed such that the integrity of each record maintained through appropriate levels of security such as recognition of an electronic signature, or other means, which uniquely identify the initiating person as the author of that record. No two persons shall have the same electronic identity;

(2) The electronic storage of each record shall be initiated by the person making the inspection within 24 hours following the completion of that inspection;

(3) The electronic system shall ensure that each record cannot be modified in any way, or replaced, once the record is transmitted and stored;

(4) Any amendment to a record shall be electronically stored apart from the record which it amends. Each amendment to a record shall be uniquely identified as to the person making the amendment;

(5) The electronic system shall provide for the maintenance of inspection records as originally submitted without corruption or loss of data; and

(6) Paper copies of electronic records and amendments to those records, that may be necessary to document compliance with this part, shall be made available for inspection and copying by the FRA and track inspectors responsible under §213.305. Such paper copies shall be made available to the track inspectors and at the locations specified in paragraph (b) of this section.

(7) Track inspection records shall be kept available to persons who performed the inspection and to persons performing subsequent inspections.

(f) Each vehicle/track interaction safety record required under §213.333 (g), and (m) shall be made available for inspection and copying by the FRA at the locations specified in paragraph (b) of this section.

APPENDIX A TO PART 213—MAXIMUM ALLOWABLE CURVING SPEEDS

TABLE 1—THREE INCHES UNBALANCE

[Elevation of outer rail (inches)]

Degree of curvature	0	½	1	1½	2	2½	3	3½	4	4½	5	5½	6
(12) Maximum allowable operating speed (mph)													
0°30′	93	100	107	113	120	125	131	136	141	146	151	156	160
0°40′	80	87	93	98	103	109	113	118	122	127	131	135	139
0°50′	72	78	83	88	93	97	101	106	110	113	117	121	124
1°00′	66	71	76	80	85	89	93	96	100	104	107	110	113
1°15′	59	63	68	72	76	79	83	86	89	93	96	99	101
1°30′	54	58	62	66	69	72	76	79	82	85	87	90	93
1°45′	50	54	57	61	64	67	70	73	76	78	81	83	86
2°00′	46	50	54	57	60	63	66	68	71	73	76	78	80
2°15′	44	47	50	54	56	59	62	64	67	69	71	74	76
2°30′	41	45	48	51	54	56	59	61	63	66	68	70	72
2°45′	40	43	46	48	51	54	56	58	60	62	65	66	68
3°00′	38	41	44	46	49	51	54	56	58	60	62	64	66
3°15′	36	39	42	45	47	49	51	54	56	57	59	61	63
3°30′	35	38	40	43	45	47	50	52	54	55	57	59	61
3°45′	34	37	39	41	44	46	48	50	52	54	55	57	59
4°00′	33	35	38	40	42	44	46	48	50	52	54	55	57
4°30′	31	33	36	38	40	42	44	45	47	49	50	52	54
5°00′	29	32	34	36	38	40	41	43	45	46	48	49	51
5°30′	28	30	32	34	36	38	40	41	43	44	46	47	48
6°00′	27	29	31	33	35	36	38	39	41	42	44	45	46
6°30′	26	28	30	31	33	35	36	38	39	41	42	43	45
7°00′	25	27	29	30	32	34	35	36	38	39	40	42	43
8°00′	23	25	27	28	30	31	33	34	35	37	38	39	40
9°00′	22	24	25	27	28	30	31	32	33	35	36	37	38
10°00′	21	22	24	25	27	28	29	31	32	33	34	35	36
11°00′	20	21	23	24	26	27	28	29	30	31	32	33	34
12°00′	19	20	22	23	24	26	27	28	29	30	31	32	33

TABLE 2—FOUR INCHES UNBALANCE

[Elevation of outer rail (inches)]

Degree of curvature	0	½	1	1½	2	2½	3	3½	4	4½	5	5½	6

(12) Maximum allowable operating speed (mph)

0°30′	107	113	120	125	131	136	141	146	151	156	160	165	169
0°40′	93	98	104	109	113	118	122	127	131	135	139	143	146
0°50′	83	88	93	97	101	106	110	113	117	121	124	128	131
1°00′	76	80	85	89	93	96	100	104	107	110	113	116	120
1°15′	68	72	76	79	83	86	89	93	96	99	101	104	107
1°30′	62	65	69	72	76	79	82	85	87	90	93	95	98
1°45′	57	61	64	67	70	73	76	78	81	83	86	88	90
2°00′	53	57	60	63	65	68	71	73	76	78	80	82	85
2°15′	50	53	56	59	62	64	67	69	71	73	76	78	80
2°30′	48	51	53	56	59	61	63	65	68	70	72	74	76
2°45′	46	48	51	53	56	58	60	62	64	66	68	70	72
3°00′	44	46	49	51	53	56	58	60	62	64	65	67	69
3°15′	42	44	47	49	51	53	55	57	59	61	63	65	66
3°30′	40	43	45	47	49	52	53	55	57	59	61	62	64
3°45′	39	41	44	46	48	50	52	53	55	57	59	60	62
4°00′	38	40	42	44	46	48	50	52	53	55	57	58	60
4°30′	36	38	40	42	44	45	47	49	50	52	53	55	56
5°00′	34	36	38	40	41	43	45	46	48	49	51	52	53
5°30′	32	34	36	38	39	41	43	44	46	47	48	50	51
6°00′	31	33	35	36	38	39	41	42	44	45	46	48	49
6°30′	30	31	33	35	36	38	39	41	42	43	44	46	47
7°00′	29	30	32	34	35	36	38	39	40	42	43	44	45
8°00′	27	28	30	31	33	34	35	37	38	39	40	41	42
9°00′	25	27	28	30	31	32	33	35	36	37	38	39	40
10°00′	24	25	27	28	29	30	32	33	34	35	36	37	38
11°00′	23	24	25	27	28	29	30	31	32	33	34	35	36
12°00′	22	23	24	26	27	28	29	30	31	32	33	34	35

APPENDIX B TO PART 213—SCHEDULE OF CIVIL PENALTIES

Section	Violation	Willful Violation [1]
Subpart A—General:		
213.4(a) Excepted track [2]	$2,500	$5,000
213.4(b) Excepted track [2]	2,500	5,000
213.4(c) Excepted track [2]	2,500	5,000
213.4(d) Excepted track [2]	2,500	5,000
213.4(e):		
(1) Excepted track	5,000	7,500
(2) Excepted track	7,000	10,000
(3) Excepted track	7,000	10,000
(4) Excepted track	5,000	7,500
213.4(f) Excepted track	2,000	4,000
213.7 Designation of qualified persons to supervise certain renewals and inspect track	1,000	2,000
213.9 Classes of track: Operating speed limits	2,500	2,500
213.11 Restoration or renewal of track under traffic conditions	2,500	2,500
213.13 Measuring track not under load	1,000	2,000
Subpart B—Roadbed:		
213.33 Drainage	2,500	5,000
213.37 Vegetation	1,000	2,000
Subpart C—Track Geometry:		
213.53 Gage	5,000	7,500
13.55 Alinement	5,000	7,500
213.57 Curves; elevation and speed limitations	2,500	5,000
213.59 Elevation of curved track; runoff	2,500	2,500
213.63 Track surface	5,000	7,500
Subpart D—Track surface:		
213.103 Ballast; general	2,500	5,000
213.109 Crossties		
(a) Material used	1,000	2,000
(b) Distribution of ties	2,500	5,000
(c) Sufficient number of nondefective ties	1,000	2,000
(d) Joint ties	2,500	5,000
(e) Track constructed without crossties	2,500	5,000
213.113 Defective rails	5,000	7,500
213.115 Rail end mismatch	2,500	5,000
§213.119 Continuous welded rail		
(a) through (i)	5,000	7,500
213.121 (a) Rail joints	2,500	5,000
213.121 (b) Rail joints	2,500	5,000
213.121 (c) Rail joints	5,000	7,500
213.121 (d) Rail joints	2,500	5,000
213.121 (e) Rail joints	2,500	5,000
213.121 (f) Rail joints	2,500	5,000
213.121 (g) Rail joints	2,500	5,000
213.121 (h) Rail joints	5,000	7,500
213.122 Torch cut rail	2,500	5,000
213.123 Tie plates	1,000	2,000
213.127 Rail fastenings	2,500	5,000
213.133 Turnouts and track crossings, generally	1,000	1,000
213.135 Switches:		
(a) through (g)	2,500	5,000
(h) chipped or worn points	5,000	7,500
213.137 Frogs	2,500	5,000
213.139 Spring rail frogs	2,500	5,000
213.141 Self-guarded frogs	2,500	5,000
213.143 Frog guard rails and guard faces; gage	2,500	5,000
Subpart E—Track appliances and track-related devices:		
213.205 Derails	2,500	5,000
Subpart F—Inspection:		
213.233 Track inspections	2,000	4,000
213.235 Switches, crossings, transition devices	2,000	4,000
213.237 Inspection of rail	2,500	5,000
213.239 Special inspections	2,500	5,000
213.241 Inspection records	1,000	1,000
Subpart G—High Speed:		
213.305 Designation of qualified individuals; general qualifications	1,000	2,000
213.307 Class of track; operating speed limits	2,500	5,000
213.309 Restoration or renewal of track under traffic conditions	2,500	5,000
213.311 Measuring track not under load	1,000	2,000
213.319 Drainage	2,500	5,000
213.321 Vegetation	1,000	2,000

Section	Violation	Willful Violation [1]
213.323 Track gage	5,000	7,500
213.327 Alinement	5,000	7,500
213.329 Curves, elevation and speed limits	2,500	5,000
213.331 Track surface	5,000	7,500
213.333 Automated vehicle inspection systems	5,000	7,500
213.335 Crossties		
(a) Material used	1,000	2,000
(b) Distribution of ties	2,500	5,000
(c) Sufficient number of nondefective ties, non-concrete	1,000	2,000
(d) Sufficient number of nondefective concrete ties	1,000	2,000
(e) Joint ties	2,500	5,000
(f) Track constructed without crossties	2,500	5,000
(g) Non-defective ties surrounding defective ties	2,500	5,000
(h) Tie plates	2,500	5,000
(i) Tie plates	1,000	2,000
213.337 Defective rails	5,000	7,500
213.339 Inspection of rail in service	2,500	5,000
213.341 Inspection of new rail	2,500	5,000
213.343 Continuous welded rail (a) through (h)	5,000	7,500
213.345 Vehicle qualification testing (a) through (b)	5,000	7,500
(c) through (e)	2,500	5,000
213.347 Automotive or railroad crossings at grade	5,000	7,500
213.349 Rail end mismatch	2,500	5,000
213.351 (a) Rail joints	2,500	5,000
213.351 (b) Rail joints	2,500	5,000
213.351 (c) Rail joints	5,000	7,500
213.351 (d) Rail joints	2,500	5,000
213.351 (e) Rail joints	2,500	5,000
213.351 (f) Rail joints	5,000	7,500
213.351 (g) Rail joints	5,000	7,500
213. 352 Torch cut rails	2,500	5,000
213.353 Turnouts, crossovers, transition devices	1,000	2,000
213.355 Frog guard rails and guard faces; gage	2,500	5,000
213.357 Derails	2,500	5,000
213.359 Track stiffness	5,000	7,500
213.361 Right of way	5,000	7,500
213.365 Visual inspections	2,500	5,000
213.367 Special inspections	2,500	5,000
213.369 Inspections records	2,000	4,000

[1] A penalty may be assessed against an individual only for a willful violation. The Administrator reserves the right to assess a penalty of up to $27,000 for any violation where circumstances warrant. See 49 CFR Part 209, Appendix A.

[2] In addition to assessment of penalties for each instance of noncompliance with the requirements identified by this footnote, track segments designated as excepted track that are or become ineligible for such designation by virtue of noncompliance with any of the requirements to which this footnote applies are subject to all other requirements of Part 213 until such noncompliance is remedied.

[63 FR 34029, June 22, 1998; 63 FR 45959, Aug. 28, 1998, as amended at 70 FR 66299, Nov. 2, 2005]

Appendix C to Part 213—Statement of Agency Policy on the Safety of Railroad Bridges

1. The structural integrity of bridges that carry railroad tracks is important to the safety of railroad employees and to the public. The responsibility for the safety of railroad bridges rests with the owner of the track carried by the bridge, together with any other party to whom that responsibility has been assigned by the track owner.

2. The capacity of a bridge to safely support its traffic can be determined only by intelligent application of engineering principles and the laws of physics. Bridge owners should use, as FRA does, those principles to assess the integrity of railroad bridges.

3. The long term ability of a structure to perform its function is an economic issue beyond the intent of this policy. In assessing a bridge's structural condition, FRA focuses on the present safety of the structure, rather than its appearance or long term usefulness.

4. FRA inspectors conduct regular evaluations of railroad bridge inspection and management practices. The objective of these evaluations is to document the practices of the evaluated railroad and to disclose any program weaknesses that could affect the safety of the public or railroad employees. When the evaluation discloses problems, FRA seeks a cooperative resolution. If safety is jeopardized by a bridge owner's failure to resolve a bridge problem, FRA will use available legal means, including issuance of emergency orders, to protect the safety of railroad employees and the public.

5. This policy statement addresses the integrity of bridges that carry railroad tracks.

It does not address the integrity of other types of structures on railroad property (i.e., tunnels or bridges carrying highways) or other features over railroads (i.e., highway overpasses).

6. The guidelines published in this statement are advisory, rather than regulatory, in nature. They indicate those elements FRA deems essential to successful bridge management programs. FRA uses the guidelines when evaluating bridge inspection and management practices.

GUIDELINES

1. Responsibility for safety of railroad bridges

(a) TRACK OWNER. The owner of the track on a bridge, or another person assuming responsibility for the compliance of that track with this Part under provisions of §213.5, is responsible for ensuring that the bridge is capable of safely carrying all railroad traffic operated on that track, and for specifying the maximum loads that may be operated over the bridge.

(b) DIVIDED OWNERSHIP. Where the owner of the track on a bridge does not own the bridge, the track owner should ensure that the bridge owner is following a program that will maintain the integrity of the bridge. The track owner either should participate in the inspection of the bridge, or should obtain and review reports of inspections performed by the bridge owner. The track owner should maintain current information regarding loads that may be operated over the bridge, either from its own engineering evaluations or as provided by a competent engineer representing the bridge owner. Information on permissible loads may be communicated by the bridge owner either in terms of specific car and locomotive configurations and weights, or as values representing a standard railroad bridge rating reference system. The most common standard bridge rating reference system incorporated in the Manual for Railway Engineering of the American Railway Engineering and Maintenance of Way Association is the dimensional and proportional load configuration devised by Theodore Cooper. Other reference systems may be used where convenient, provided their effects can be defined in terms of shear, bending and pier reactions as necessary for a comprehensive evaluation and statement of the capacity of a bridge.

(c) OTHER RAILROADS. The owner of the track on a bridge should advise other railroads operating on that track of the maximum loads permitted on the bridge stated in terms of car and locomotive configurations and weights. No railroad should operate a load which exceeds those limits without specific authority from, and in accordance with restrictions placed by, the track owner.

2. CAPACITY OF RAILROAD BRIDGES

(a) DETERMINATION. The safe capacity of bridges should be determined by competent engineers using accepted principles of structural design and analysis.

(b) ANALYSIS. Proper analysis of a bridge means knowledge of the actual dimensions, materials and properties of the structural members of the bridge, their condition, and the stresses imposed in those members by the service loads.

(c) RATING. The factors which were used for the design of a bridge can generally be used to determine and rate the load capacity of a bridge provided:

(i) The condition of the bridge has not changed significantly, and

(ii) The stresses resulting from the service loads can be correlated to the stresses for which the bridge was designed or rated.

3. RAILROAD BRIDGE LOADS

(a) CONTROL OF LOADS. The operating instructions for each railroad operating over bridges should include provisions to restrict the movement of cars and locomotives whose weight or configuration exceed the nominal capacity of the bridges.

(b) AUTHORITY FOR EXCEPTIONS. Equipment exceeding the nominal weight restriction on a bridge should be operated only under conditions determined by a competent engineer who has properly analyzed the stresses resulting from the proposed loads.

(c) OPERATING CONDITIONS. Operating conditions for exceptional loads may include speed restrictions, restriction of traffic from adjacent multiple tracks, and weight limitations on adjacent cars in the same train.

4. RAILROAD BRIDGE RECORDS

(a) The organization responsible for the safety of a bridge should keep design, construction, maintenance and repair records readily accessible to permit the determination of safe loads. Having design or rating drawings and calculations that conform to the actual structure greatly simplifies the process of making accurate determinations of safe bridge loads.

(b) Organizations acquiring railroad property should obtain original or usable copies of all bridge records and drawings, and protect or maintain knowledge of the location of the original records.

5. SPECIFICATIONS FOR DESIGN AND RATING OF RAILROAD BRIDGES

(a) The recommended specifications for the design and rating of bridges are those found in the *Manual for Railway Engineering* published by the American Railway Engineering and Maintenance-of-way Association. These specifications incorporate recognized principles of structural design and analysis to provide for the safe and economic utilization

of railroad bridges during their expected useful lives. These specifications are continually reviewed and revised by committees of competent engineers. Other specifications for design and rating, however, have been successfully used by some railroads and may continue to be suitable.

(b) A bridge can be rated for capacity according to current specifications regardless of the specification to which it was originally designed.

6. Periodic Inspections of Railroad Bridges

(a) Periodic bridge inspections by competent inspectors are necessary to determine whether a structure conforms to its design or rating condition and, if not, the degree of nonconformity.

(b) The prevailing practice throughout the railroad industry is to inspect railroad bridges at least annually. Inspections at more frequent intervals may be indicated by the nature or condition of a structure or intensive traffic levels.

7. Underwater Inspections of Railroad Bridges

(a) Inspections of bridges should include measuring and recording the condition of substructure support at locations subject to erosion from moving water.

(b) Stream beds often are not visible to the inspector. Indirect measurements by sounding, probing, or any other appropriate means are necessary in those cases. A series of records of those readings will provide the best information in the event unexpected changes suddenly occur. Where such indirect measurements do not provide the necessary assurance of foundation integrity, diving inspections should be performed as prescribed by a competent engineer.

8. Seismic Considerations

(a) Owners of bridges should be aware of the risks posed by earthquakes in the areas in which their bridges are located. Precautions should be taken to protect the safety of trains and the public following an earthquake.

(b) Contingency plans for seismic events should be prepared in advance, taking into account the potential for seismic activity in an area.

(c) The predicted attenuation of ground motion varies considerably within the United States. Local ground motion attenuation values and the magnitude of an earthquake both influence the extent of the area affected by an earthquake. Regions with low frequency of seismic events produce less data from which to predict attenuation factors. That uncertainty should be considered when designating the area in which precautions should be taken following the first notice of an earthquake. In fact, earthquakes in such regions might propagate their effects over much wider areas than earthquakes of the same magnitude occurring in regions with frequent seismic activity.

9. Special Inspections of Railroad Bridges

(a) A special bridge inspection should be performed after an occurrence that might have reduced the capacity of the bridge, such as a flood, an earthquake, a derailment, or an unusual impact.

(b) When a railroad learns that a bridge might have suffered damage through an unusual occurrence, it should restrict train operations over the bridge until the bridge is inspected and evaluated.

10. Railroad Bridge Inspection Records

(a) Bridge inspections should be recorded. Records should identify the structure inspected, the date of the inspection, the name of the inspector, the components inspected, and their condition.

(b) Information from bridge inspection reports should be incorporated into a bridge management program to ensure that exceptions on the reports are corrected or accounted for. A series of inspection reports prepared over time should be maintained so as to provide a valuable record of trends and rates of degradation of bridge components. The reports should be structured to promote comprehensive inspections and effective communication between an inspector and an engineer who performs an analysis of a bridge.

(c) An inspection report should be comprehensible to a competent person without interpretation by the reporting inspector.

11. Railroad Bridge Inspectors and Engineers

(a) Bridge inspections should be performed by technicians whose training and experience enable them to detect and record indications of distress on a bridge. Inspectors should provide accurate measurements and other information about the condition of the bridge in enough detail so that an engineer can make a proper evaluation of the safety of the bridge.

(b) Accurate information about the condition of a bridge should be evaluated by an engineer who is competent to determine the capacity of the bridge. The inspector and the evaluator often are not the same individual. The quality of the bridge evaluation depends on the quality of the communication between them.

12. Scheduling Inspections

(a) A bridge management program should include a means to ensure that each bridge

under the program is inspected at the frequency prescribed for that bridge by a competent engineer.

(b) Bridge inspections should be scheduled from an accurate bridge inventory list that includes the due date of the next inspection.

13. SPECIAL CONSIDERATIONS FOR RAILROAD BRIDGES

Railroad bridges differ from other types of bridges in the types of loads they carry, in their modes of failure and indications of distress, and in their construction details and components. Proper inspection and analysis of railroad bridges require familiarity with the loads, details and indications of distress that are unique to this class of structure. Particular care should be taken that modifications to railroad bridges, including retrofits for protection against the effects of earthquakes, are suitable for the structure to which they are to be applied. Modifications should not adversely affect the serviceability of the bridge nor its accessibility for periodic or special inspection.

[65 FR 52670, Aug. 30, 2000]

PART 214—RAILROAD WORKPLACE SAFETY

Subpart A—General

Sec.
214.1 Purpose and scope.
214.3 Application.
214.4 Preemptive effect.
214.5 Responsibility for compliance.
214.7 Definitions.

Subpart B—Bridge Worker Safety Standards

214.101 Purpose and scope.
214.103 Fall protection, generally.
214.105 Fall protection systems standards and practices.
214.107 Working over or adjacent to water.
214.109 Scaffolding.
214.111 Personal protective equipment, generally.
214.113 Head protection.
214.115 Foot protection.
214.117 Eye and face protection.

Subpart C—Roadway Worker Protection

214.301 Purpose and scope.
214.302 Information collection requirements.
214.303 Railroad on-track safety programs, generally.
214.305 Compliance dates.
214.307 Review and approval of individual on-track safety programs by FRA.
214.309 On-track safety program documents.
214.311 Responsibility of employers.
214.313 Responsibility of individual roadway workers.
214.315 Supervision and communication.
214.317 On-track safety procedures, generally.
214.319 Working limits, generally.
214.321 Exclusive track occupancy.
214.323 Foul time.
214.325 Train coordination.
214.327 Inaccessible track.
214.329 Train approach warning provided by watchmen/lookouts.
214.331 Definite train location.
214.333 Informational line-ups of trains.
214.335 On-track safety procedures for roadway work groups.
214.337 On-track safety procedures for lone workers.
214.339 Audible warning from trains.
214.341 Roadway maintenance machines.
214.343 Training and qualification, general.
214.345 Training for all roadway workers.
214.347 Training and qualification for lone workers.
214.349 Training and qualification of watchmen/lookouts.
214.351 Training and qualification of flagmen.
214.353 Training and qualification of roadway workers who provide on-track safety for roadway work groups.
214.355 Training and qualification in on-track safety for operators of roadway maintenance machines.

Subpart D—On-Track Roadway Maintenance Machines and Hi-Rail Vehicles

214.501 Purpose and scope.
214.503 Good-faith challenges; procedures for notification and resolution.
214.505 Required environmental control and protection systems for new on-track roadway maintenance machines with enclosed cabs.
214.507 Required safety equipment for new on-track roadway maintenance machines.
214.509 Required visual illumination and reflective devices for new on-track roadway maintenance machines.
214.511 Required audible warning devices for new on-track roadway maintenance machines.
214.513 Retrofitting of existing on-track roadway maintenance machines; general.
214.515 Overhead covers for existing on-track roadway maintenance machines.
214.517 Retrofitting of existing on-track roadway maintenance machines manufactured on or after January 1, 1991.
214.518 Safe and secure positions for riders.
214.519 Floors, decks, stairs, and ladders of on-track roadway maintenance machines.

214.521 Flagging equipment for on-track roadway maintenance machines and hi-rail vehicles.
214.523 Hi-rail vehicles.
214.525 Towing with on-track roadway maintenance machines or hi-rail vehicles.
214.527 On-track roadway maintenance machines; inspection for compliance and schedule for repairs.
214.529 In-service failure of primary braking system.
214.531 Schedule of repairs; general.
214.533 Schedule of repairs subject to availability of parts.
APPENDIX A TO PART 214—SCHEDULE OF CIVIL PENALTIES

AUTHORITY: 49 U.S.C. 20103, 20107, 21301, 21304; 28 U.S.C. 2461, note; and 49 CFR 1.49.

SOURCE: 57 FR 28127, June 24, 1992, unless otherwise noted.

Subpart A—General

§214.1 Purpose and scope.

(a) The purpose of this part is to prevent accidents and casualties to employees involved in certain railroad inspection, maintenance and construction activities.

(b) This part prescribes minimum Federal safety standards for the railroad workplace safety subjects addressed herein. This part does not restrict a railroad or railroad contractor from adopting and enforcing additional or more stringent requirements not inconsistent with this part.

§214.3 Application.

This part applies to railroads that operate rolling equipment on track that is part of the general railroad system of transportation.

§214.4 Preemptive effect.

Under 49 U.S.C. 20106 (formerly section 205 of the Federal Railroad Safety Act of 1970 (45 U.S.C. 434)), issuance of the regulations in this part preempts any State law, rule, regulation, order, or standard covering the same subject matter, except a provision directed at an essentially local safety hazard that is not incompatible with this part and that does not unreasonably burden on interstate commerce.

[61 FR 65975, Dec. 16, 1996]

§214.5 Responsibility for compliance.

Any person (an entity of any type covered under 1 U.S.C. 1, including but not limited to the following: a railroad; a manager, supervisor, official, or other employee or agent of a railroad; any owner, manufacturer, lessor, or lessee of railroad equipment, track, or facilities; any independent contractor providing goods or services to a railroad; and any employee of such owner, manufacturer, lessor, lessee, or independent contractor) who violates any requirement of this part or causes the violation of any such requirement is subject to a civil penalty of at least $550 and not more than $16,000 per violation, except that penalties may be assessed against individuals only for willful violations, and where a grossly negligent violation or a pattern of repeated violations has created an imminent hazard of death or injury, or has caused death or injury, a penalty not to exceed $27,000 per violation may be assessed. See appendix A to this part for a statement of agency civil penalty policy.

[57 FR 28127, June 24, 1992, as amended at 63 FR 11620, Mar. 10, 1998; 69 FR 30593, May 28, 2004; 72 FR 51196, Sept. 6, 2007]

§214.7 Definitions.

Adjacent tracks mean two or more tracks with track centers spaced less than 25 feet apart.

Anchorage means a secure point of attachment for lifelines, lanyards or deceleration devices that is independent of the means of supporting or suspending the employee.

Body belt means a strap that can be secured around the waist or body and attached to a lanyard, lifeline, or deceleration device.

Body harness means a device with straps that is secured about the person in a manner so as to distribute the fall arrest forces over (at least) the thighs, shoulders, pelvis, waist, and chest and that can be attached to a lanyard, lifeline, or deceleration device.

Class I, Class II, and Class III have the meaning assigned by, Title 49 Code of Federal Regulations part 1201, General Instructions 1–1.

Competent person means one who is capable of identifying existing and predictable hazards in the workplace and who is authorized to take prompt corrective measures to eliminate them.

Control operator means the railroad employee in charge of a remotely controlled switch or derail, an interlocking, or a controlled point, or a segment of controlled track.

Controlled track means track upon which the railroad's operating rules require that all movements of trains must be authorized by a train dispatcher or a control operator.

Deceleration device means any mechanism, including, but not limited to, rope grabs, ripstitch lanyards, specially woven lanyards, tearing or deforming lanyards, and automatic self-retracting lifelines/lanyards that serve to dissipate a substantial amount of energy during a fall arrest, or otherwise limit the energy on a person during fall arrest.

Definite train location means a system for establishing on-track safety by providing roadway workers with information about the earliest possible time that approaching trains may pass specific locations as prescribed in § 214.331 of this part.

Designated official means any person(s) designated by the employer to receive notification of non-complying conditions on on-track roadway maintenance machines and hi-rail vehicles.

Effective securing device when used in relation to a manually operated switch or derail means one which is:

(a) Vandal resistant;

(b) Tamper resistant; and

(c) Designed to be applied, secured, uniquely tagged and removed only by the class, craft or group of employees for whom the protection is being provided.

Employee means an individual who is engaged or compensated by a railroad or by a contractor to a railroad to perform any of the duties defined in this part.

Employer means a railroad, or a contractor to a railroad, that directly engages or compensates individuals to perform any of the duties defined in this part.

Equivalent means alternative designs, materials, or methods that the railroad or railroad contractor can demonstrate will provide equal or greater safety for employees than the means specified in this part.

Exclusive track occupancy means a method of establishing working limits on controlled track in which movement authority of trains and other equipment is withheld by the train dispatcher or control operator, or restricted by flagmen, as prescribed in § 214.321 of this part.

Flagman when used in relation to roadway worker safety means an employee designated by the railroad to direct or restrict the movement of trains past a point on a track to provide on-track safety for roadway workers, while engaged solely in performing that function.

Foul time is a method of establishing working limits on controlled track in which a roadway worker is notified by the train dispatcher or control operator that no trains will operate within a specific segment of controlled track until the roadway worker reports clear of the track, as prescribed in § 214.323 of this part.

Fouling a track means the placement of an individual or an item of equipment in such proximity to a track that the individual or equipment could be struck by a moving train or on-track equipment, or in any case is within four feet of the field side of the near running rail.

Free fall means the act of falling before the personal fall arrest system begins to apply force to arrest the fall.

Free fall distance means the vertical displacement of the fall arrest attachment point on a person's body harness between onset of the fall and the point at which the system begins to apply force to arrest the fall. This distance excludes deceleration distance and lifeline and lanyard elongation, but includes any deceleration device slide distance or self-retracting lifeline/lanyard extension before they operate and fall arrest forces occur.

Hi-rail vehicle means a roadway maintenance machine that is manufactured to meet Federal Motor Vehicle Safety Standards and is equipped with retractable flanged wheels so that the vehicle may travel over the highway or on railroad tracks.

Hi-rail vehicle, new means a hi-rail vehicle that is ordered after December 26, 2003 or completed after September 27, 2004.

Inaccessible track means a method of establishing working limits on non-controlled track by physically preventing entry and movement of trains and equipment.

Individual train detection means a procedure by which a lone worker acquires on-track safety by seeing approaching trains and leaving the track before they arrive and which may be used only under circumstances strictly defined in this part.

Informational line-up of trains means information provided in a prescribed format to a roadway worker by the train dispatcher regarding movements of trains authorized or expected on a specific segment of track during a specific period of time.

Lanyard means a flexible line of rope, wire rope, or strap that is used to secure a body harness to a deceleration device, lifeline, or anchorage.

Lifeline means a component of a fall arrest system consisting of a flexible line that connects to an anchorage at one end to hang vertically (vertical lifeline) or to an anchorage at both ends to stretch horizontally (horizontal lifeline), and that serves as a means for connecting other components of a personal fall arrest system to the anchorage.

Lone worker means an individual roadway worker who is not being afforded on-track safety by another roadway worker, who is not a member of a roadway work group, and who is not engaged in a common task with another roadway worker.

Non-controlled track means track upon which trains are permitted by railroad rule or special instruction to move without receiving authorization from a train dispatcher or control operator.

On-track roadway maintenance machine means a self-propelled, rail-mounted, non-highway, maintenance machine whose light weight is in excess of 7,500 pounds, and whose purpose is not for the inspection of railroad track.

On-track roadway maintenance machine, existing means any on-track roadway maintenance machine that does not meet the definition of a ''new on-track roadway maintenance machine.''

On-track roadway maintenance machine, new means an on-track roadway maintenance machine that is ordered after December 26, 2003, and completed after September 27, 2004.

On-track safety means a state of freedom from the danger of being struck by a moving railroad train or other railroad equipment, provided by operating and safety rules that govern track occupancy by personnel, trains and on-track equipment.

Personal fall arrest system means a system used to arrest the fall of a person from a working level. It consists of an anchorage, connectors, body harness, lanyard, deceleration device, lifeline, or combination of these.

Qualified means a status attained by an employee who has successfully completed any required training for, has demonstrated proficiency in, and has been authorized by the employer to perform the duties of a particular position or function.

Railroad means all forms of non-highway ground transportation that run on rails or electro-magnetic guideways, including (1) commuter or other short-haul rail passenger service in a metropolitan or suburban area, and (2) high-speed ground transportation systems that connect metropolitan areas, without regard to whether they use new technologies not associated with traditional railroads. Such term does not include rapid transit operations within an urban area that are not connected to the general railroad system of transportation.

Railroad bridge means a structure supporting one or more railroad tracks above land or water with a span length of 12 feet or more measured along the track centerline. This term applies to the entire structure between the faces of the backwalls of abutments or equivalent components, regardless of the number of spans, and includes all such structures, whether of timber, stone, concrete, metal, or any combination thereof.

Railroad bridge worker or bridge worker means any employee of, or employee of a contractor of, a railroad owning or

responsible for the construction, inspection, testing, or maintenance of a bridge whose assigned duties, if performed on the bridge, include inspection, testing, maintenance, repair, construction, or reconstruction of the track, bridge structural members, operating mechanisms and water traffic control systems, or signal, communication, or train control systems integral to that bridge.

Restricted speed means a speed that will permit a train or other equipment to stop within one-half the range of vision of the person operating the train or other equipment, but not exceeding 20 miles per hour, unless further restricted by the operating rules of the railroad.

Roadway maintenance machine means a device powered by any means of energy other than hand power which is being used on or near railroad track for maintenance, repair, construction or inspection of track, bridges, roadway, signal, communications, or electric traction systems. Roadway maintenance machines may have road or rail wheels or may be stationary.

Roadway work group means two or more roadway workers organized to work together on a common task.

Roadway worker means any employee of a railroad, or of a contractor to a railroad, whose duties include inspection, construction, maintenance or repair of railroad track, bridges, roadway, signal and communication systems, electric traction systems, roadway facilities or roadway maintenance machinery on or near track or with the potential of fouling a track, and flagmen and watchmen/lookouts as defined in this section.

Self-retracting lifeline/lanyard means a deceleration device that contains a drum-wound line that may be slowly extracted from, or retracted onto, the drum under slight tension during normal employee movement, and which, after onset of a fall, automatically locks the drum and arrests the fall.

Snap-hook means a connector comprised of a hook-shaped member with a normally closed keeper, that may be opened to permit the hook to receive an object and, when released, automatically closes to retain the object.

Train approach warning means a method of establishing on-track safety by warning roadway workers of the approach of trains in ample time for them to move to or remain in a place of safety in accordance with the requirements of this part.

Train coordination means a method of establishing working limits on track upon which a train holds exclusive authority to move whereby the crew of that train yields that authority to a roadway worker.

Train dispatcher means the railroad employee assigned to control and issue orders governing the movement of trains on a specific segment of railroad track in accordance with the operating rules of the railroad that apply to that segment of track.

Watchman/lookout means an employee who has been annually trained and qualified to provide warning to roadway workers of approaching trains or on-track equipment. Watchmen/lookouts shall be properly equipped to provide visual and auditory warning such as whistle, air horn, white disk, red flag, lantern, fusee. A watchman/lookout's sole duty is to look out for approaching trains/on-track equipment and provide at least fifteen seconds advanced warning to employees before arrival of trains/on-track equipment.

Working limits means a segment of track with definite boundaries established in accordance with this part upon which trains and engines may move only as authorized by the roadway worker having control over that defined segment of track. Working limits may be established through ''exclusive track occupancy,'' ''inaccessible track,'' ''foul time'' or ''train coordination'' as defined herein.

[57 FR 28127, June 24, 1992, as amended at 61 FR 65975, Dec. 16, 1996; 67 FR 1906, Jan. 15, 2002; 68 FR 44407, July 28, 2003]

Subpart B—Bridge Worker Safety Standards

§ 214.101 Purpose and scope.

(a) The purpose of this subpart is to prevent accidents and casualties arising from the performance of work on railroad bridges.

(b) This subpart prescribes minimum railroad safety rules for railroad employees performing work on bridges. Each railroad and railroad contractor may prescribe additional or more stringent operating rules, safety rules, and other special instructions not inconsistent with this subpart.

(c) These provisions apply to all railroad employees, railroads, and railroad contractors performing work on railroad bridges.

(d) Any working conditions involving the protection of railroad employees working on railroad bridges not within the subject matter addressed by this chapter, including respiratory protection, hazard communication, hearing protection, welding and lead exposure standards, shall be governed by the regulations of the U.S. Department of Labor, Occupational Safety and Health Administration.

§ 214.103 Fall protection, generally.

(a) Except as provided in paragraphs (b) through (d) of this section, when bridge workers work twelve feet or more above the ground or water surface, they shall be provided and shall use a personal fall arrest system or safety net system. All fall protection systems required by this section shall conform to the standards set forth in § 214.105 of this subpart.

(b)(1) This section shall not apply if the installation of the fall arrest system poses a greater risk than the work to be performed. In any action brought by FRA to enforce the fall protection requirements, the railroad or railroad contractor shall have the burden of proving that the installation of such device poses greater exposure to risk than performance of the work itself.

(2) This section shall not apply to bridge workers engaged in inspection of railroad bridges conducted in full compliance with the following conditions:

(i) The railroad or railroad contractor has a written program in place that requires training in, adherence to, and use of safe procedures associated with climbing techniques and procedures to be used;

(ii) The bridge worker to whom this exception applies has been trained and qualified according to that program to perform bridge inspections, has been previously and voluntarily designated to perform inspections under the provision of that program, and has accepted the designation;

(iii) The bridge worker to whom this exception applies is familiar with the appropriate climbing techniques associated with all bridge structures the bridge worker is responsible for inspecting;

(iv) The bridge worker to whom this exception applies is engaged solely in moving on or about the bridge or observing, measuring and recording the dimensions and condition of the bridge and its components; and

(v) The bridge worker to whom this section applies is provided all equipment necessary to meet the needs of safety, including any specialized alternative systems required.

(c) This section shall not apply where bridge workers are working on a railroad bridge equipped with walkways and railings of sufficient height, width, and strength to prevent a fall, so long as bridge workers do not work beyond the railings, over the side of the bridge, on ladders or other elevation devices, or where gaps or holes exist through which a body could fall. Where used in place of fall protection as provided for in § 214.105, this paragraph (c) is satisfied by:

(1) Walkways and railings meeting standards set forth in the American Railway Engineering Association's Manual for Railway Engineering; and

(2) Roadways attached to railroad bridges, provided that bridge workers on the roadway deck work or move at a distance six feet or more from the edge of the roadway deck, or from an opening through which a person could fall.

(d) This section shall not apply where bridge workers are performing repairs or inspections of a minor nature that are completed by working exclusively between the outside rails, including but not limited to, routine welding, spiking, anchoring, spot surfacing, and joint bolt replacement.

[67 FR 1906, Jan. 15, 2002]

§ 214.105 Fall protection systems standards and practices.

(a) *General requirements.* All fall protection systems required by this subpart shall conform to the following:

(1) Fall protection systems shall be used only for personal fall protection.

(2) Any fall protection system subjected to impact loading shall be immediately and permanently removed from service unless fully inspected and determined by a competent person to be undamaged and suitable for reuse.

(3) All fall protection system components shall be protected from abrasions, corrosion, or any other form of deterioration.

(4) All fall protection system components shall be inspected prior to each use for wear, damage, corrosion, mildew, and other deterioration. Defective components shall be permanently removed from service.

(5) Prior to use and after any component or system is changed, bridge workers shall be trained in the application limits of the equipment, proper hook-up, anchoring and tie-off techniques, methods of use, and proper methods of equipment inspection and storage.

(6) The railroad or railroad contractor shall provide for prompt rescue of bridge workers in the event of a fall.

(7) Connectors shall have a corrosion-resistant finish, and all surfaces and edges shall be smooth to prevent damage to interfacing parts of the system.

(8) Connectors shall be drop forged, pressed or formed steel, or made of equivalent-strength materials.

(9) Anchorages, including single- and double-head anchors, shall be capable of supporting at least 5,000 pounds per bridge worker attached, or shall be designed, installed, and used under supervision of a qualified person as part of a complete personal fall protection system that maintains a safety factor of at least two.

(b) *Personal fall arrest systems.* All components of a personal fall arrest system shall conform to the following standards:

(1) Lanyards and vertical lifelines that tie off one bridge worker shall have a minimum breaking strength of 5,000 pounds.

(2) Self-retracting lifelines and lanyards that automatically limit free fall distance to two feet or less shall have components capable of sustaining a minimum static tensile load of 3,000 pounds applied to the device with the lifeline or lanyard in the fully extended position.

(3) Self-retracting lifelines and lanyards that do not limit free fall distance to two feet or less, ripstitch, and tearing and deformed lanyards shall be capable of withstanding 5,000 pounds applied to the device with the lifeline or lanyard in the fully extended position.

(4) Horizontal lifelines shall be designed, installed, and used under the supervision of a competent person, as part of a complete personal fall arrest system that maintains a safety factor of at least two.

(5) Lifelines shall not be made of natural fiber rope.

(6) Body belts shall not be used as components of personal fall arrest systems.

(7) The personal fall arrest system shall limit the maximum arresting force on a bridge worker to 1,800 pounds when used with a body harness.

(8) The personal fall arrest system shall bring a bridge worker to a complete stop and limit maximum deceleration distance a bridge worker travels to 3.5 feet.

(9) The personal fall arrest system shall have sufficient strength to withstand twice the potential impact energy of a bridge worker free falling a distance of six feet, or the free fall distance permitted by the system, whichever is less.

(10) The personal fall arrest system shall be arranged so that a bridge worker cannot free fall more than six feet and cannot contact the ground or any lower horizontal surface of the bridge.

(11) Personal fall arrest systems shall be worn with the attachment point of the body harness located in the center of the wearer's back near shoulder level, or above the wearer's head.

(12) When vertical lifelines are used, each bridge worker shall be provided with a separate lifeline.

(13) Devices used to connect to a horizontal lifeline that may become a

vertical lifeline shall be capable of locking in either direction.

(14) Dee-rings and snap-hooks shall be capable of sustaining a minimum tensile load of 3,600 pounds without cracking, breaking, or taking permanent deformation.

(15) Dee-rings and snap-hooks shall be capable of sustaining a minimum tensile load of 5,000 pounds.

(16) Snap-hooks shall not be connected to each other.

(17) Snap-hooks shall be dimensionally compatible with the member to which they are connected to prevent unintentional disengagement, or shall be a locking snap-hook designed to prevent unintentional disengagement.

(18) Unless of a locking type, snap-hooks shall not be engaged:

(i) Directly, next to a webbing, rope, or wire rope;

(ii) To each other;

(iii) To a dee-ring to which another snap-hook or other connector is attached;

(iv) To a horizontal lifeline; or

(v) To any object that is incompatibly shaped or dimensioned in relation to the snap-hook so that unintentional disengagement could occur.

(c) *Safety net systems.* Use of safety net systems shall conform to the following standards and practices:

(1) Safety nets shall be installed as close as practicable under the walking/working surface on which bridge workers are working, but shall not be installed more than 30 feet below such surface.

(2) If the distance from the working surface to the net exceeds 30 feet, bridge workers shall be protected by personal fall arrest systems.

(3) The safety net shall be installed such that any fall from the working surface to the net is unobstructed.

(4) Except as provided in this section, safety nets and net installations shall be drop-tested at the jobsite after initial installation and before being used as a fall protection system, whenever relocated, after major repair, and at six-month intervals if left in one place. The drop-test shall consist of a 400-pound bag of sand 30 inches, plus or minus two inches, in diameter dropped into the net from the highest (but not less than 3½ feet) working surface on which bridge workers are to be protected.

(i) When the railroad or railroad contractor demonstrates that a drop-test is not feasible and, as a result, the test is not performed, the railroad or railroad contractor, or designated competent person, shall certify that the net and its installation are in compliance with the provisions of this section by preparing a certification record prior to use of the net.

(ii) The certification shall include an identification of the net, the date it was determined that the net was in compliance with this section, and the signature of the person making this determination. Such person's signature shall certify that the net and its installation are in compliance with this section. The most recent certification for each net installation shall be available at the jobsite where the subject net is located.

(5) Safety nets and their installations shall be capable of absorbing an impact force equal to that produced by the drop test specified in this section.

(6) The safety net shall be installed such that there is no contact with surfaces or structures below the net when subjected to an impact force equal to the drop test specified in this section.

(7) Safety nets shall extend outward from the outermost projection of the work surface as follows:

(i) When the vertical distance from the working level to the horizontal plane of the net is 5 feet or less, the minimum required horizontal distance of the outer edge of the net beyond the edge of the working surface is 8 feet.

(ii) When the vertical distance from the working level to the horizontal plane of the net is 5 feet, but less than 10 feet, the minimum required horizontal distance of the outer edge of the net beyond the edge of the working surface is 10 feet.

(iii) When the vertical distance from the working level to the horizontal plane of the net is more than 10 feet, the minimum required horizontal distance of the outer edge of the net beyond the edge of the working surface is 13 feet.

(8) Defective nets shall not be used. Safety nets shall be inspected at least once a week for mildew, wear, damage,

and other deterioration. Defective components shall be removed permanently from service.

(9) Safety nets shall be inspected after any occurrence that could affect the integrity of the safety net system.

(10) Tools, scraps, or other materials that have fallen into the safety net shall be removed as soon as possible, and at least before the next work shift.

(11) Each safety net shall have a border rope for webbing with a minimum breaking strength of 5,000 pounds.

(12) The maximum size of each safety net mesh opening shall not exceed 36 square inches and shall not be longer than 6 inches on any side measured center-to-center of mesh ropes or webbing. All mesh crossing shall be secured to prevent enlargement of the mesh opening.

(13) Connections between safety net panels shall be as strong as integral net components and shall be spaced not more than 6 inches apart.

[67 FR 1906, Jan. 15, 2002; 67 FR 11055, Mar. 12, 2002]

§ 214.107 Working over or adjacent to water.

(a) Bridge workers working over or adjacent to water with a depth of four feet or more, or where the danger of drowning exists, shall be provided and shall use life vests or buoyant work vests in compliance with U.S. Coast Guard requirements in 46 CFR 160.047, 160.052, and 160.053. Life preservers in compliance with U.S. Coast Guard requirements in 46 CFR 160.055 shall also be within ready access. This section shall not apply to bridge workers using personal fall arrest systems or safety nets that comply with this subpart or to bridge workers who are working under the provisions of § 214.103(b)(2), (c) or (d) of this subpart.

(b) Prior to each use, all flotation devices shall be inspected for defects that reduce their strength or buoyancy by designated individuals trained by the railroad or railroad contractor. Defective units shall not be used.

(c) Where life vests are required by paragraph (a) of this section, ring buoys with at least 90 feet of line shall be provided and readily available for emergency rescue operations. Distance between ring buoys shall not exceed 200 feet.

(d) Where life vests are required, at least one lifesaving skiff, inflatable boat, or equivalent device shall be immediately available. If it is determined by a competent person that environmental conditions, including weather, water speed, and terrain, merit additional protection, the skiff or boat shall be manned.

[70 FR 7050, Feb. 10, 2005]

§ 214.109 Scaffolding.

(a) Scaffolding used in connection with railroad bridge maintenance, inspection, testing, and construction shall be constructed and maintained in a safe condition and meet the following minimum requirements:

(1) Each scaffold and scaffold component, except suspension ropes and guardrail systems, but including footings and anchorage, shall be capable of supporting, without failure, its own weight and at least four times the maximum intended load applied or transmitted to that scaffold or scaffold component.

(2) Guardrail systems shall be capable of withstanding, without failure, a force of at least 200 pounds applied within two inches of the top edge, in any outward or downward direction, at any point along the top edge.

(3) Top edge height of toprails, or equivalent guardrail system member, shall be 42 inches, plus or minus three inches. Supports shall be at intervals not to exceed eight feet. Toeboards shall be a minimum of four inches in height.

(4) Midrails, screens, mesh, intermediate vertical members, solid panels, and equivalent structural members shall be capable of withstanding, without failure, a force of at least 150 pounds applied in any downward or outward direction at any point along the midrail or other member.

(5) Midrails shall be installed at a height midway between the top edge of the guardrail system and the walking/working level.

(b) Scaffolds shall not be altered or moved while they are occupied. This paragraph does not apply to vertical movements of mobile scaffolds that are

designed to move vertically while occupied.

(c) An access ladder or equivalent safe access shall be provided.

(d) All exposed surfaces shall be prepared and cleared to prevent injury due to laceration, puncture, tripping, or falling hazard.

(e) All scaffold design, construction, and repair shall be completed by competent individuals trained and knowledgeable about design criteria, intended use, structural limitations, and procedures for proper repair.

(f) Manually propelled mobile ladder stands and scaffolds shall conform to the following:

(1) All manually propelled mobile ladder stands and scaffolds shall be capable of carrying the design load.

(2) All ladder stands, scaffolds, and scaffold components shall be capable of supporting, without failure, displacement, or settlement, its own weight and at least four times the maximum intended load applied or transmitted to that ladder stand, scaffold, or scaffold component.

(3) All exposed surfaces shall be free from sharp edges or burrs.

(4) The maximum work level height shall not exceed four times the minimum or least base dimensions of any mobile ladder stand or scaffold. Where the basic mobile unit does not meet this requirement, suitable outrigger frames shall be employed to achieve this least base dimension, or equivalent provisions shall be made to guy or brace the unit against tipping.

(5) The minimum platform width for any work level shall not be less than 20 inches for mobile scaffolds (towers). Ladder stands shall have a minimum step width of 16 inches. The steps of ladder stands shall be fabricated from slip resistant treads.

(6) Guardrails and midrails shall conform to the requirements listed in paragraph (a) of this section.

(7) A climbing ladder or stairway shall be provided for proper access and egress, and shall be affixed or built into the scaffold and so located that in its use it will not have a tendency to tip the scaffold.

(8) Wheels or casters shall be capable of supporting, without failure, at least four times the maximum intended load applied or transmitted to that component. All scaffold casters shall be provided with a positive wheel and/or swivel lock to prevent movement. Ladder stands shall have at least two of the four casters and shall be of the swivel type.

§214.111 Personal protective equipment, generally.

With the exception of foot protection, the railroad or railroad contractor shall provide and the bridge worker shall use appropriate personal protective equipment described in this subpart in all operations where there is exposure to hazardous conditions, or where this subpart indicates the need for using such equipment to reduce the hazards to railroad bridge workers. The railroad or railroad contractor shall require the use of foot protection when the potential for foot injury exists.

[67 FR 1908, Jan. 15, 2002]

§214.113 Head protection.

(a) Railroad bridge workers working in areas where there is a possible danger of head injury from impact, or from falling or flying objects, or from electrical shock and burns, shall be provided and shall wear protective helmets.

(b) Helmets for the protection of railroad bridge workers against impact and penetration of falling and flying objects, or from high voltage electrical shock and burns shall conform to the national consensus standards for industrial head protection (American National Standards Institute, Z89.1–1986, Protective Headwear for Industrial Workers). This incorporation by reference was approved by the Director of the Federal Register in accordance with 5 U.S.C. 552(a) and 1 CFR part 51. Copies may be obtained from the American National Standards Institute, 25 West 43rd Street, New York, NY 10036. Copies may be inspected at the Federal Railroad Administration, Docket Clerk, 1120 Vermont Avenue NW., Washington, DC, or at the National Archives and Records Administration (NARA). For information on the availability of this material at NARA, call 202–741–6030, or go to: *http://www.archives.gov/federal_register/*

code_of_federal_regulations/ibr_locations.html.

[67 FR 1908, Jan. 15, 2002]

§ 214.115 Foot protection.

(a) The railroad or railroad contractor shall require railroad bridge workers to wear foot protection equipment when potential foot injury may result from impact, falling or flying objects, electrical shock or burns, or other hazardous condition.

(b) Safety-toe footwear for railroad bridge workers shall conform to the national consensus standards for safety-toe footwear (American National Standards Institute, American National Standard Z41–1991, Standard for Personal Protection-Protective Footwear). This incorporation by reference was approved by the Director of the Federal Register in accordance with 5 U.S.C. 552(a) and 1 CFR part 51. Copies may be obtained from American National Standards Institute, 25 West 43rd Street, New York, NY 10036. Copies may be inspected at the Federal Railroad Administration, Docket Clerk, 1120 Vermont Avenue, Washington, DC, or at the National Archives and Records Administration (NARA). For information on the availability of this material at NARA, call 202–741–6030, or go to: *http://www.archives.gov/federal_register/code_of_federal_regulations/ibr_locations.html.*

[67 FR 1908, Jan. 15, 2002]

§ 214.117 Eye and face protection.

(a) Railroad bridge workers shall be provided and shall wear eye and face protection equipment when potential eye or face injury may result from physical, chemical, or radiant agents.

(b) Eye and face protection equipment required by this section shall conform to the national consensus standards for occupational and educational eye and face protection (American National Standards Institute, Z87.1–1989, Practice for Occupational and Educational Eye and Face Protection). This incorporation by reference was approved by the Director of the Federal Register in accordance with 5 U.S.C. 552(a) and 1 CFR part 51. Copies may be obtained from the American National Standards Institute, 25 West 43rd Street, New York, NY 10036. Copies may be inspected at the Federal Railroad Administration, Docket Clerk, 1120 Vermont Avenue, Washington, DC, or at the National Archives and Records Administration (NARA). For information on the availability of this material at NARA, call 202–741–6030, or go to: *http://www.archives.gov/federal_register/code_of_federal_regulations/ibr_locations.html.*

(c) Face and eye protection equipment required by this section shall be kept clean and in good repair. Use of equipment with structural or optical defects is prohibited.

(d) Railroad bridge workers whose vision requires the use of corrective lenses, when required by this section to wear eye protection, shall be protected by goggles or spectacles of one of the following types:

(i) Spectacles whose protective lenses provide optical correction the, frame of which includes shielding against objects reaching the wearer's eyes around the lenses;

(ii) Goggles that can be worn over corrective lenses without disturbing the adjustment of the lenses; or

(iii) Goggles that incorporate corrective lenses mounted behind the protective lenses.

[67 FR 1908, Jan. 15, 2002; 67 FR 11055, Mar. 12, 2002]

Subpart C—Roadway Worker Protection

SOURCE: 61 FR 65976, Dec. 16, 1996, unless otherwise noted.

§ 214.301 Purpose and scope.

(a) The purpose of this subpart is to prevent accidents and casualties caused by moving railroad cars, locomotives or roadway maintenance machines striking roadway workers or roadway maintenance machines.

(b) This subpart prescribes minimum safety standards for roadway workers. Each railroad and railroad contractor may prescribe additional or more stringent operating rules, safety rules, and other special instructions that are consistent with this subpart.

(c) This subpart prescribes safety standards related to the movement of roadway maintenance machines where such movements affect the safety of roadway workers. This subpart does not otherwise affect movements of roadway maintenance machines that are conducted under the authority of a train dispatcher, a control operator, or the operating rules of the railroad.

§ 214.302 Information collection requirements.

(a) The information collection requirements of this part were reviewed by the Office of Management and Budget pursuant to the Paperwork Reduction Act of 1995, Public Law 104–13, § 2, 109 Stat.163 (1995) (codified as revised at 44 U.S.C. §§ 3501–3520), and are assigned OMB control number 2130–0539. FRA may not conduct or sponsor and a respondent is not required to respond to, a collection of information unless it displays a currently valid OMB control number.

(b) The information collection requirements are found in the following sections: §§ 214.303, 214.307, 214.309, 214.311, 214.313, 214.315, 214.319, 214.321, 214.323, 214.325, 214.327, 214.329, 214.331, 214.335, 214.341.

§ 214.303 Railroad on-track safety programs, generally.

(a) Each railroad to which this part applies shall adopt and implement a program that will afford on-track safety to all roadway workers whose duties are performed on that railroad. Each such program shall provide for the levels of protection specified in this subpart.

(b) Each on-track safety program adopted to comply with this part shall include procedures to be used by each railroad for monitoring effectiveness of and compliance with the program.

§ 214.305 Compliance dates.

Each program adopted by a railroad shall comply not later than the date specified in the following schedule:

(a) For each Class I railroad (including National Railroad Passenger Corporation) and each railroad providing commuter service in a metropolitan or suburban area, March 15, 1997.

(b) For each Class II railroad, April 15, 1997.

(c) For each Class III railroad, switching and terminal railroad, and any railroad not otherwise classified, May 15, 1997.

(d) For each railroad commencing operations after the pertinent date specified in this section, the date on which operations commence.

§ 214.307 Review and approval of individual on-track safety programs by FRA.

(a) Each railroad shall notify, in writing, the Associate Administrator for Safety, Federal Railroad Administration, RRS–15, 400 Seventh Street SW, Washington, DC 20590, not less than one month before its on-track safety program becomes effective. The notification shall include the effective date of the program, the address of the office at which the program documents are available for review and photocopying by representatives of the Federal Railroad Administrator, and the name, title, address and telephone number of the primary person to be contacted with regard to review of the program. This notification procedure shall also apply to subsequent changes to a railroad's on-track safety program.

(b) After receipt of the notification from the railroad, the Federal Railroad Administration will conduct a formal review of the on-track safety program. The Federal Railroad Administration will notify the primary railroad contact person of the results of the review, in writing, whether the on-track safety program or changes to the program have been approved by the Administrator, and if not approved, the specific points in which the program or changes are deficient.

(c) A railroad's on-track safety program will take effect by the established compliance dates in § 214.305, without regard to the date of review or approval by the Federal Railroad Administration. Changes to a railroad's program will take effect on dates established by each railroad without regard to the date of review and approval by the Federal Railroad Administration.

§ 214.309 On-track safety program documents.

Rules and operating procedures governing track occupancy and protection shall be maintained together in one manual and be readily available to all roadway workers. Each roadway worker responsible for the on-track safety of others, and each lone worker, shall be provided with and shall maintain a copy of the program document.

§ 214.311 Responsibility of employers.

(a) Each employer is responsible for the understanding and compliance by its employees with its rules and the requirements of this part.

(b) Each employer shall guarantee each employee the absolute right to challenge in good faith whether the on-track safety procedures to be applied at the job location comply with the rules of the operating railroad, and to remain clear of the track until the challenge is resolved.

(c) Each employer shall have in place a written procedure to achieve prompt and equitable resolution of challenges made in accordance with §§ 214.311(b) and 214.313(d).

§ 214.313 Responsibility of individual roadway workers.

(a) Each roadway worker is responsible for following the on-track safety rules of the railroad upon which the roadway worker is located.

(b) A roadway worker shall not foul a track except when necessary for the performance of duty.

(c) Each roadway worker is responsible to ascertain that on-track safety is being provided before fouling a track.

(d) Each roadway worker may refuse any directive to violate an on-track safety rule, and shall inform the employer in accordance with § 214.311 whenever the roadway worker makes a good faith determination that on-track safety provisions to be applied at the job location do not comply with the rules of the operating railroad.

§ 214.315 Supervision and communication.

(a) When an employer assigns duties to a roadway worker that call for that employee to foul a track, the employer shall provide the employee with a job briefing that includes information on the means by which on-track safety is to be provided, and instruction on the on-track safety procedures to be followed.

(b) A job briefing for on-track safety shall be deemed complete only after the roadway worker has acknowledged understanding of the on-track safety procedures and instructions presented.

(c) Every roadway work group whose duties require fouling a track shall have one roadway worker designated by the employer to provide on-track safety for all members of the group. The designated person shall be qualified under the rules of the railroad that conducts train operations on those tracks to provide the protection necessary for on-track safety of each individual in the group. The responsible person may be designated generally, or specifically for a particular work situation.

(d) Before any member of a roadway work group fouls a track, the designated person providing on-track safety for the group under paragraph (c) of this section shall inform each roadway worker of the on- track safety procedures to be used and followed during the performance of the work at that time and location. Each roadway worker shall again be so informed at any time the on-track safety procedures change during the work period. Such information shall be given to all roadway workers affected before the change is effective, except in cases of emergency. Any roadway workers who, because of an emergency, cannot be notified in advance shall be immediately warned to leave the fouling space and shall not return to the fouling space until on-track safety is re-established.

(e) Each lone worker shall communicate at the beginning of each duty period with a supervisor or another designated employee to receive a job briefing and to advise of his or her planned itinerary and the procedures that he or she intends to use for on-track safety. When communication channels are disabled, the job briefing shall be conducted as soon as possible after the beginning of the work period when communications are restored.

§ 214.317 On-track safety procedures, generally.

Each employer subject to the provisions of this part shall provide on-track safety for roadway workers by adopting a program that contains specific rules for protecting roadway workers that comply with the provisions of §§ 214.319 through 214.337 of this part.

§ 214.319 Working limits, generally.

Working limits established on controlled track shall conform to the provisions of § 214.321 Exclusive track occupancy, or § 214.323 Foul time, or § 214.325 Train coordination. Working limits established on non-controlled track shall conform to the provision of § 214.327 Inaccessible track. Working limits established under any procedure shall, in addition, conform to the following provisions:

(a) Only a roadway worker who is qualified in accordance with § 214.353 of this part shall establish or have control over working limits for the purpose of establishing on-track safety.

(b) Only one roadway worker shall have control over working limits on any one segment of track.

(c) All affected roadway workers shall be notified before working limits are released for the operation of trains. Working limits shall not be released until all affected roadway workers have either left the track or have been afforded on-track safety through train approach warning in accordance with § 214.329 of this subpart.

§ 214.321 Exclusive track occupancy.

Working limits established on controlled track through the use of exclusive track occupancy procedures shall comply with the following requirements:

(a) The track within working limits shall be placed under the control of one roadway worker by either:

(1) Authority issued to the roadway worker in charge by the train dispatcher or control operator who controls train movements on that track,

(2) Flagmen stationed at each entrance to the track within working limits and instructed by the roadway worker in charge to permit the movement of trains and equipment into the working limits only as permitted by the roadway worker in charge, or

(3) The roadway worker in charge causing fixed signals at each entrance to the working limits to display an aspect indicating ''Stop.''

(b) An authority for exclusive track occupancy given to the roadway worker in charge of the working limits shall be transmitted on a written or printed document directly, by relay through a designated employee, in a data transmission, or by oral communication, to the roadway worker by the train dispatcher or control operator in charge of the track.

(1) Where authority for exclusive track occupancy is transmitted orally, the authority shall be written as received by the roadway worker in charge and repeated to the issuing employee for verification.

(2) The roadway worker in charge of the working limits shall maintain possession of the written or printed authority for exclusive track occupancy while the authority for the working limits is in effect.

(3) The train dispatcher or control operator in charge of the track shall make a written or electronic record of all authorities issued to establish exclusive track occupancy.

(c) The extent of working limits established through exclusive track occupancy shall be defined by one of the following physical features clearly identifiable to a locomotive engineer or other person operating a train or railroad equipment:

(1) A flagman with instructions and capability to hold all trains and equipment clear of the working limits;

(2) A fixed signal that displays an aspect indicating ''Stop'';

(3) A station shown in the time-table, and identified by name with a sign, beyond which train movement is prohibited by train movement authority or the provisions of a direct train control system.

(4) A clearly identifiable milepost sign beyond which train movement is prohibited by train movement authority or the provisions of a direct train control system; or

(5) A clearly identifiable physical location prescribed by the operating

rules of the railroad that trains may not pass without proper authority.

(d) Movements of trains and roadway maintenance machines within working limits established through exclusive track occupancy shall be made only under the direction of the roadway worker having control over the working limits. Such movements shall be restricted speed unless a higher speed has been specifically authorized by the roadway worker in charge of the working limits.

§ 214.323 Foul time.

Working limits established on controlled track through the use of foul time procedures shall comply with the following requirements:

(a) Foul time may be given orally or in writing by the train dispatcher or control operator only after that employee has withheld the authority of all trains to move into or within the working limits during the foul time period.

(b) Each roadway worker to whom foul time is transmitted orally shall repeat the track number, track limits and time limits of the foul time to the issuing employee for verification before the foul time becomes effective.

(c) The train dispatcher or control operator shall not permit the movement of trains or other on-track equipment onto the working limits protected by foul time until the roadway worker who obtained the foul time has reported clear of the track.

§ 214.325 Train coordination.

Working limits established by a roadway worker through the use of train coordination shall comply with the following requirements:

(a) Working limits established by train coordination shall be within the segments of track or tracks upon which only one train holds exclusive authority to move.

(b) The roadway worker who establishes working limits by train coordination shall communicate with a member of the crew of the train holding the exclusive authority to move, and shall determine that:

(1) The train is visible to the roadway worker who is establishing the working limits,

(2) The train is stopped,

(3) Further movements of the train will be made only as permitted by the roadway worker in charge of the working limits while the working limits remain in effect, and

(4) The crew of the train will not give up its exclusive authority to move until the working limits have been released to the train crew by the roadway worker in charge of the working limits.

§ 214.327 Inaccessible track.

(a) Working limits on non-controlled track shall be established by rendering the track within working limits physically inaccessible to trains at each possible point of entry by one of the following features:

(1) A flagman with instructions and capability to hold all trains and equipment clear of the working limits;

(2) A switch or derail aligned to prevent access to the working limits and secured with an effective securing device by the roadway worker in charge of the working limits;

(3) A discontinuity in the rail that precludes passage of trains or engines into the working limits;

(4) Working limits on controlled track that connects directly with the inaccessible track, established by the roadway worker in charge of the working limits on the inaccessible track; or

(5) A remotely controlled switch aligned to prevent access to the working limits and secured by the control operator of such remotely controlled switch by application of a locking or blocking device to the control of that switch, when:

(i) The control operator has secured the remotely controlled switch by applying a locking or blocking device to the control of the switch, and

(ii) The control operator has notified the roadway worker who has established the working limits that the requested protection has been provided, and

(iii) The control operator is not permitted to remove the locking or blocking device from the control of the switch until receiving permission to do so from the roadway worker who established the working limits.

(b) Trains and roadway maintenance machines within working limits established by means of inaccessible track shall move only under the direction of the roadway worker in charge of the working limits, and shall move at restricted speed.

(c) No operable locomotives or other items of on-track equipment, except those present or moving under the direction of the roadway worker in charge of the working limits, shall be located within working limits established by means of inaccessible track.

§ 214.329 Train approach warning provided by watchmen/lookouts.

Roadway workers in a roadway work group who foul any track outside of working limits shall be given warning of approaching trains by one or more watchmen/lookouts in accordance with the following provisions:

(a) Train approach warning shall be given in sufficient time to enable each roadway worker to move to and occupy a previously arranged place of safety not less than 15 seconds before a train moving at the maximum speed authorized on that track can pass the location of the roadway worker.

(b) Watchmen/lookouts assigned to provide train approach warning shall devote full attention to detecting the approach of trains and communicating a warning thereof, and shall not be assigned any other duties while functioning as watchmen/lookouts.

(c) The means used by a watchman/lookout to communicate a train approach warning shall be distinctive and shall clearly signify to all recipients of the warning that a train or other on-track equipment is approaching.

(d) Every roadway worker who depends upon train approach warning for on-track safety shall maintain a position that will enable him or her to receive a train approach warning communicated by a watchman/lookout at any time while on-track safety is provided by train approach warning.

(e) Watchmen/lookouts shall communicate train approach warnings by a means that does not require a warned employee to be looking in any particular direction at the time of the warning, and that can be detected by the warned employee regardless of noise or distraction of work.

(f) Every roadway worker who is assigned the duties of a watchman/lookout shall first be trained, qualified and designated in writing by the employer to do so in accordance with the provisions of § 214.349.

(g) Every watchman/lookout shall be provided by the employer with the equipment necessary for compliance with the on-track safety duties which the watchman/lookout will perform.

§ 214.331 Definite train location.

A roadway worker may establish on-track safety by using definite train location only where permitted by and in accordance with the following provisions:

(a) A Class I railroad or a commuter railroad may only use definite train location to establish on-track safety at points where such procedures were in use on January 15, 1997.

(b) Each Class I or commuter railroad shall include in its on-track safety program for approval by FRA in accordance with § 214.307 of this part a schedule for phase-out of the use of definite train location to establish on-track safety.

(c) A railroad other than a Class I or commuter railroad may use definite train location to establish on-track safety on subdivisions only where:

(1) Such procedures were in use on January 15, 1997, or

(2) The number of trains operated on the subdivision does not exceed:

(i) Three during any nine-hour period in which roadway workers are on duty, and

(ii) Four during any twelve-hour period in which roadway workers are on duty.

(d) Definite train location shall only be used to establish on-track safety according to the following provisions:

(1) Definite train location information shall be issued only by the one train dispatcher who is designated to authorize train movements over the track for which the information is provided.

(2) A definite train location list shall indicate all trains to be operated on the track for which the list is provided,

during the time for which the list is effective.

(3) Trains not shown on the definite train location list shall not be operated on the track for which the list is provided, during the time for which the list is effective, until each roadway worker to whom the list has been issued has been notified of the train movement, has acknowledged the notification to the train dispatcher, and has canceled the list. A list thus canceled shall then be invalid for on-track safety.

(4) Definite train location shall not be used to establish on-track safety within the limits of a manual interlocking, or on track over which train movements are governed by a Traffic Control System or by a Manual Block System.

(5) Roadway workers using definite train location for on-track safety shall not foul a track within ten minutes before the earliest time that a train is due to depart the last station at which time is shown in approach to the roadway worker's location nor until that train has passed the location of the roadway worker.

(6) A railroad shall not permit a train to depart a location designated in a definite train location list before the time shown therein.

(7) Each roadway worker who uses definite train location to establish on-track safety must be qualified on the relevant physical characteristics of the territory for which the train location information is provided.

§ 214.333 Informational line-ups of trains.

(a) A railroad is permitted to include informational line-ups of trains in its on-track safety program for use only on subdivisions of that railroad upon which such procedure was in effect on March 14, 1996.

(b) Each procedure for the use of informational line-ups of trains found in an on-track safety program shall include all provisions necessary to protect roadway workers using the procedure against being struck by trains or other on-track equipment.

(c) Each on-track safety program that provides for the use of informational line-ups shall include a schedule for discontinuance of the procedure by a definite date.

§ 214.335 On-track safety procedures for roadway work groups.

(a) No employer subject to the provisions of this part shall require or permit a roadway worker who is a member of a roadway work group to foul a track unless on-track safety is provided by either working limits, train approach warning, or definite train location in accordance with the applicable provisions of §§ 214.319, 214.321, 213.323, 214.325, 214.327, 214.329 and 214.331 of this part.

(b) No roadway worker who is a member of a roadway work group shall foul a track without having been informed by the roadway worker responsible for the on-track safety of the roadway work group that on-track safety is provided.

(c) Roadway work groups engaged in large-scale maintenance or construction shall be provided with train approach warning in accordance with § 214.327 for movements on adjacent tracks that are not included within working limits.

§ 214.337 On-track safety procedures for lone workers.

(a) A lone worker who fouls a track while performing routine inspection or minor correction may use individual train detection to establish on-track safety only where permitted by this section and the on-track safety program of the railroad.

(b) A lone worker retains an absolute right to use on-track safety procedures other than individual train detection if he or she deems it necessary, and to occupy a place of safety until such other form of on-track safety can be established.

(c) Individual train detection may be used to establish on-track safety only:

(1) By a lone worker who has been trained, qualified, and designated to do so by the employer in accordance with § 214.347 of this subpart;

(2) While performing routine inspection and minor correction work;

(3) On track outside the limits of a manual interlocking, a controlled point, or a remotely controlled hump yard facility;

(4) Where the lone worker is able to visually detect the approach of a train moving at the maximum speed authorized on that track, and move to a previously determined place of safety, not less than 15 seconds before the train would arrive at the location of the lone worker;

(5) Where no power-operated tools or roadway maintenance machines are in use within the hearing of the lone worker; and

(6) Where the ability of the lone worker to hear and see approaching trains and other on-track equipment is not impaired by background noise, lights, precipitation, fog, passing trains, or any other physical conditions.

(d) The place of safety to be occupied by a lone worker upon the approach of a train may not be on a track, unless working limits are established on that track.

(e) A lone worker using individual train detection for on-track safety while fouling a track may not occupy a position or engage in any activity that would interfere with that worker's ability to maintain a vigilant lookout for, and detect the approach of, a train moving in either direction as prescribed in this section.

(f) A lone worker who uses individual train detection to establish on-track safety shall first complete a written Statement of On-track Safety. The Statement shall designate the limits of the track for which it is prepared and the date and time for which it is valid. The statement shall show the maximum authorized speed of trains within the limits for which it is prepared, and the sight distance that provides the required warning of approaching trains. The lone worker using individual train detection to establish on-track safety shall produce the Statement of On-track Safety when requested by a representative of the Federal Railroad Administrator.

§ 214.339 Audible warning from trains.

Each railroad shall require that the locomotive whistle be sounded, and the locomotive bell be rung, by trains approaching roadway workers on or about the track. Such audible warning shall not substitute for on-track safety procedures prescribed in this part.

§ 214.341 Roadway maintenance machines.

(a) Each employer shall include in its on-track safety program specific provisions for the safety of roadway workers who operate or work near roadway maintenance machines. Those provisions shall address:

(1) Training and qualification of operators of roadway maintenance machines.

(2) Establishment and issuance of safety procedures both for general application and for specific types of machines.

(3) Communication between machine operators and roadway workers assigned to work near or on roadway maintenance machines.

(4) Spacing between machines to prevent collisions.

(5) Space between machines and roadway workers to prevent personal injury.

(6) Maximum working and travel speeds for machines dependent upon weather, visibility, and stopping capabilities.

(b) Instructions for the safe operation of each roadway machine shall be provided and maintained with each machine large enough to carry the instruction document.

(1) No roadway worker shall operate a roadway maintenance machine without having been trained in accordance with § 214.355.

(2) No roadway worker shall operate a roadway maintenance machine without having complete knowledge of the safety instructions applicable to that machine.

(3) No employer shall assign roadway workers to work near roadway machines unless the roadway worker has been informed of the safety procedures applicable to persons working near the roadway machines and has acknowledged full understanding.

(c) Components of roadway maintenance machines shall be kept clear of trains passing on adjacent tracks. Where operating conditions permit roadway maintenance machines to be less than four feet from the rail of an adjacent track, the on-track safety

program of the railroad shall include the procedural instructions necessary to provide adequate clearance between the machine and passing trains.

§ 214.343 Training and qualification, general.

(a) No employer shall assign an employee to perform the duties of a roadway worker, and no employee shall accept such assignment, unless that employee has received training in the on-track safety procedures associated with the assignment to be performed, and that employee has demonstrated the ability to fulfill the responsibilities for on-track safety that are required of an individual roadway worker performing that assignment.

(b) Each employer shall provide to all roadway workers in its employ initial or recurrent training once every calendar year on the on-track safety rules and procedures that they are required to follow.

(c) Railroad employees other than roadway workers, who are associated with on-track safety procedures, and whose primary duties are concerned with the movement and protection of trains, shall be trained to perform their functions related to on-track safety through the training and qualification procedures prescribed by the operating railroad for the primary position of the employee, including maintenance of records and frequency of training.

(d) Each employer of roadway workers shall maintain written or electronic records of each roadway worker qualification in effect. Each record shall include the name of the employee, the type of qualification made, and the most recent date of qualification. These records shall be kept available for inspection and photocopying by the Federal Railroad Administrator during regular business hours.

§ 214.345 Training for all roadway workers.

The training of all roadway workers shall include, as a minimum, the following:

(a) Recognition of railroad tracks and understanding of the space around them within which on-track safety is required.

(b) The functions and responsibilities of various persons involved with on-track safety procedures.

(c) Proper compliance with on-track safety instructions given by persons performing or responsible for on-track safety functions.

(d) Signals given by watchmen/lookouts, and the proper procedures upon receiving a train approach warning from a lookout.

(e) The hazards associated with working on or near railroad tracks, including review of on-track safety rules and procedures.

§ 214.347 Training and qualification for lone workers.

Each lone worker shall be trained and qualified by the employer to establish on-track safety in accordance with the requirements of this section, and must be authorized to do so by the railroad that conducts train operations on those tracks.

(a) The training and qualification for lone workers shall include, as a minimum, consideration of the following factors:

(1) Detection of approaching trains and prompt movement to a place of safety upon their approach.

(2) Determination of the distance along the track at which trains must be visible in order to provide the prescribed warning time.

(3) Rules and procedures prescribed by the railroad for individual train detection, establishment of working limits, and definite train location.

(4) On-track safety procedures to be used in the territory on which the employee is to be qualified and permitted to work alone.

(b) Initial and periodic qualification of a lone worker shall be evidenced by demonstrated proficiency.

§ 214.349 Training and qualification of watchmen/lookouts.

(a) The training and qualification for roadway workers assigned the duties of watchmen/lookouts shall include, as a minimum, consideration of the following factors:

(1) Detection and recognition of approaching trains.

(2) Effective warning of roadway workers of the approach of trains.

(3) Determination of the distance along the track at which trains must be visible in order to provide the prescribed warning time.

(4) Rules and procedures of the railroad to be used for train approach warning.

(b) Initial and periodic qualification of a watchman/lookout shall be evidenced by demonstrated proficiency.

§ 214.351 Training and qualification of flagmen.

(a) The training and qualification for roadway workers assigned the duties of flagmen shall include, as a minimum, the content and application of the operating rules of the railroad pertaining to giving proper stop signals to trains and holding trains clear of working limits.

(b) Initial and periodic qualification of a flagman shall be evidenced by demonstrated proficiency.

§ 214.353 Training and qualification of roadway workers who provide on-track safety for roadway work groups.

(a) The training and qualification of roadway workers who provide for the on-track safety of groups of roadway workers through establishment of working limits or the assignment and supervision of watchmen/lookouts or flagmen shall include, as a minimum:

(1) All the on-track safety training and qualification required of the roadway workers to be supervised and protected.

(2) The content and application of the operating rules of the railroad pertaining to the establishment of working limits.

(3) The content and application of the rules of the railroad pertaining to the establishment or train approach warning.

(4) The relevant physical characteristics of the territory of the railroad upon which the roadway worker is qualified.

(b) Initial and periodic qualification of a roadway worker to provide on track safety for groups shall be evidenced by a recorded examination.

§ 214.355 Training and qualification in on-track safety for operators of roadway maintenance machines.

(a) The training and qualification of roadway workers who operate roadway maintenance machines shall include, as a minimum:

(1) Procedures to prevent a person from being struck by the machine when the machine is in motion or operation.

(2) Procedures to prevent any part of the machine from being struck by a train or other equipment on another track.

(3) Procedures to provide for stopping the machine short of other machines or obstructions on the track.

(4) Methods to determine safe operating procedures for each machine that the operator is expected to operate.

(b) Initial and periodic qualification of a roadway worker to operate roadway maintenance machines shall be evidenced by demonstrated proficiency.

Subpart D—On-Track Roadway Maintenance Machines and Hi-Rail Vehicles

SOURCE: 68 FR 44407, July 28, 2003, unless otherwise noted.

§ 214.501 Purpose and scope.

(a) The purpose of this subpart is to prevent accidents and casualties caused by the lawful operation of on-track roadway maintenance machines and hi-rail vehicles.

(b) This subpart prescribes minimum safety standards for on-track roadway maintenance machines and hi-rail vehicles. An employer may prescribe additional or more stringent standards that are consistent with this subpart.

(c) Any working condition that involves the protection of employees engaged in roadway maintenance duties covered by this subpart but is not within the subject matter addressed by this subpart, including employee exposure to noise, shall be governed by the regulations of the U.S. Department of Labor, Occupational Safety and Health Administration.

§ 214.503 Good-faith challenges; procedures for notification and resolution.

(a) An employee operating an on-track roadway maintenance machine or hi-rail vehicle shall inform the employer whenever the employee makes a good-faith determination that the machine or vehicle does not comply with FRA regulations or has a condition that inhibits its safe operation.

(b) Any employee charged with operating an on-track roadway maintenance machine or hi-rail vehicle covered by this subpart may refuse to operate the machine or vehicle if the employee makes a good-faith determination that it does not comply with the requirements of this subpart or has a condition that inhibits its safe operation. The employer shall not require the employee to operate the machine or vehicle until the challenge resulting from the good-faith determination is resolved.

(c) Each employer shall have in place and follow written procedures to assure prompt and equitable resolution of challenges resulting from good-faith determinations made in accordance with this section. The procedures shall include specific steps to be taken by the employer to investigate each good-faith challenge, as well as procedures to follow once the employer finds a challenged machine or vehicle does not comply with this subpart or is otherwise unsafe to operate. The procedures shall also include the title and location of the employer's designated official.

§ 214.505 Required environmental control and protection systems for new on-track roadway maintenance machines with enclosed cabs.

(a) The following new on-track roadway maintenance machines shall be equipped with enclosed cabs with operative heating systems, operative air conditioning systems, and operative positive pressurized ventilation systems:

(1) Ballast regulators;

(2) Tampers;

(3) Mechanical brooms;

(4) Rotary scarifiers;

(5) Undercutters; and

(6) Functional equivalents of any of the machines identified in paragraphs (a)(1) through (a)(5) of this section.

(b) New on-track roadway maintenance machines, and existing on-track roadway maintenance machines specifically designated by the employer, of the types identified in paragraphs (a)(1) through (a)(5) of this section, or functionally equivalent thereto, shall be capable of protecting employees in the cabs of the machines from exposure to air contaminants, in accordance with 29 CFR 1910.1000.

(c) An employer shall maintain a list of new and designated existing on-track roadway maintenance machines of the types identified in paragraphs (a)(1) through (a)(5) of this section, or functionally equivalent thereto. The list shall be kept current and made available to the Federal Railroad Administration and other Federal and State agencies upon request.

(d) An existing roadway maintenance machine of the type identified in paragraphs (a)(1) through (a)(5) of this section, or functionally equivalent thereto, becomes ''designated'' when the employer adds the machine to the list required in paragraph (c) of this section. The designation is irrevocable, and the designated existing roadway maintenance machine remains subject to paragraph (b) of this section until it is retired or sold.

(e) If the ventilation system on a new on-track roadway maintenance machine or a designated existing on-track roadway maintenance machine of the type identified in paragraphs (a)(1) through (a)(5) of this section, or functionally equivalent thereto, becomes incapable of protecting an employee in the cab of the machine from exposure to air contaminants in accordance with 29 CFR 1910.1000, personal respiratory protective equipment shall be provided for each such employee until the machine is repaired in accordance with § 214.531.

(f) Personal respiratory protective equipment provided under paragraph (e) of this section shall comply with 29 CFR 1910.134.

(g) New on-track roadway maintenance machines with enclosed cabs,

other than the types identified in paragraphs (a)(1) through (a)(5) of this section or functionally equivalent thereto, shall be equipped with operative heating and ventilation systems.

(h) When new on-track roadway maintenance machines require operation from non-enclosed stations outside of the main cab, the non-enclosed stations shall be equipped, where feasible from an engineering standpoint, with a permanent or temporary roof, canopy, or umbrella designed to provide cover from normal rainfall and midday sun.

§ 214.507 Required safety equipment for new on-track roadway maintenance machines.

(a) Each new on-track roadway maintenance machine shall be equipped with:

(1) A seat for each operator, except as provided in paragraph (b) of this section;

(2) A safe and secure position with handholds, handrails, or a secure seat for each roadway worker transported on the machine. Each position shall be protected from moving parts of the machine;

(3) A positive method of securement for turntables, on machines equipped with a turntable, through engagement of pins and hooks that block the descent of turntable devices below the rail head when not in use;

(4) A windshield with safety glass, or other material with similar properties, if the machine is designed with a windshield. Each new on-track roadway maintenance machine designed with a windshield shall also have power windshield wipers or suitable alternatives that provide the machine operator an equivalent level of vision if windshield wipers are incompatible with the windshield material;

(5) A machine braking system capable of effectively controlling the movement of the machine under normal operating conditions;

(6) A first-aid kit that is readily accessible and complies with 29 CFR 1926.50(d)(2); and

(7) An operative and properly charged fire extinguisher of 5 BC rating or higher which is securely mounted and readily accessible to the operator from the operator's work station.

(b) Each new on-track roadway maintenance machine designed to be operated and transported by the operator in a standing position shall be equipped with handholds and handrails to provide the operator with a safe and secure position.

(c) Each new on-track roadway maintenance machine that weighs more than 32,500 pounds light weight and is operated in excess of 20 mph shall be equipped with a speed indicator that is accurate within ±5 mph of the actual speed at speeds of 10 mph and above.

(d) Each new on-track roadway maintenance machine shall have its as-built light weight displayed in a conspicuous location on the machine.

[68 FR 44407, July 28, 2003, as amended at 69 FR 8839, Feb. 26, 2004]

§ 214.509 Required visual illumination and reflective devices for new on-track roadway maintenance machines.

Each new on-track roadway maintenance machine shall be equipped with the following visual illumination and reflective devices:

(a) An illumination device, such as a headlight, capable of illuminating obstructions on the track ahead in the direction of travel for a distance of 300 feet under normal weather and atmospheric conditions;

(b) Work lights, if the machine is operated during the period between one-half hour after sunset and one-half hour before sunrise or in dark areas such as tunnels, unless equivalent lighting is otherwise provided;

(c) An operative 360-degree intermittent warning light or beacon mounted on the roof of the machine. New roadway maintenance machines that are not equipped with fixed roofs and have a light weight less than 17,500 pounds are exempt from this requirement;

(d) A brake light activated by the application of the machine braking system, and designed to be visible for a distance of 300 feet under normal weather and atmospheric conditions; and

(e) Rearward viewing devices, such as rearview mirrors.

§ 214.511 Required audible warning devices for new on-track roadway maintenance machines.

Each new on-track roadway maintenance machine shall be equipped with:

(a) A horn or other audible warning device that produces a sound loud enough to be heard by roadway workers and other machine operators within the immediate work area. The triggering mechanism for the device shall be clearly identifiable and within easy reach of the machine operator; and

(b) An automatic change-of-direction alarm which provides an audible signal that is at least three seconds long and is distinguishable from the surrounding noise. Change of direction alarms may be interrupted by the machine operator when operating the machine in the work mode if the function of the machine would result in a constant, or almost constant, sounding of the device. In any action brought by FRA to enforce the change-of-direction alarm requirement, the employer shall have the burden of proving that use of the change-of-direction alarm in a particular work function would cause a constant, or almost constant, sounding of the device.

§ 214.513 Retrofitting of existing on-track roadway maintenance machines; general.

(a) Each existing on-track roadway maintenance machine shall have a safe and secure position with handholds, handrails, or a secure seat or bench position for each roadway worker transported on the machine. Each position shall be protected from moving parts of the machine.

(b) By March 28, 2005, each existing on-track roadway maintenance machine shall be equipped with a permanent or portable horn or other audible warning device that produces a sound loud enough to be heard by roadway workers and other machine operators within the immediate work area. The triggering mechanism for the device shall be clearly identifiable and within easy reach of the machine operator.

(c) By March 28, 2005, each existing on-track roadway maintenance machine shall be equipped with a permanent illumination device or a portable light that is securely placed and not hand-held. The illumination device or portable light shall be capable of illuminating obstructions on the track ahead for a distance of 300 feet under normal weather and atmospheric conditions when the machine is operated during the period between one-half hour after sunset and one-half hour before sunrise or in dark areas such as tunnels.

[68 FR 44407, July 28, 2003, as amended at 69 FR 8839, Feb. 26, 2004]

§ 214.515 Overhead covers for existing on-track roadway maintenance machines.

(a) For those existing on-track roadway maintenance machines either currently or previously equipped with overhead covers for the operator's position, defective covers shall be repaired, and missing covers shall be reinstalled, by March 28, 2005 and thereafter maintained in accordance with the provisions of § 214.531.

(b) For those existing on-track roadway maintenance machines that are not already equipped with overhead covers for the operator's position, the employer shall evaluate the feasibility of providing an overhead cover on such a machine if requested in writing by the operator assigned to operate the machine or by the operator's designated representative. The employer shall provide the operator a written response to each request within 60 days. When the employer finds the addition of an overhead cover is not feasible, the response shall include an explanation of the reasoning used by the employer to reach that conclusion.

(c) For purposes of this section, overhead covers shall provide the operator's position with cover from normal rainfall and midday sun.

§ 214.517 Retrofitting of existing on-track roadway maintenance machines manufactured on or after January 1, 1991.

In addition to meeting the requirements of § 214.513, after March 28, 2005 each existing on-track roadway maintenance machine manufactured on or after January 1, 1991, shall have the following:

(a) A change-of-direction alarm or rearview mirror or other rearward

viewing device, if either device is feasible, given the machine's design, and if either device adds operational safety value, given the machine's function. In any action brought by FRA to enforce this requirement, the employer shall have the burden of proving that neither device is feasible or adds operational safety value, or both, given the machine's design or work function.

(b) An operative heater, when the machine is operated at an ambient temperature less than 50 degrees Fahrenheit and is equipped with, or has been equipped with, a heater installed by the manufacturer or the railroad.

(c) The light weight of the machine stenciled or otherwise clearly displayed on the machine, if the light weight is known.

(d) Reflective material, or a reflective device, or operable brake lights.

(e) Safety glass when its glass is normally replaced, except that replacement glass that is specifically intended for on-track roadway maintenance machines and is in the employer's inventory as of September 26, 2003 may be utilized until exhausted.

(f) A turntable restraint device, on machines equipped with a turntable, to prevent undesired lowering, or a warning light indicating that the turntable is not in the normal travel position.

[68 FR 44407, July 28, 2003, as amended at 69 FR 8839, Feb. 26, 2004]

§ 214.518 Safe and secure positions for riders.

On or after March 1, 2004, a roadway worker, other than the machine operator, is prohibited from riding on any on-track roadway maintenance machine unless a safe and secure position for each roadway worker on the machine is clearly identified by stenciling, marking, or other written notice.

[69 FR 8839, Feb. 26, 2004]

§ 214.519 Floors, decks, stairs, and ladders of on-track roadway maintenance machines.

Floors, decks, stairs, and ladders of on-track roadway maintenance machines shall be of appropriate design and maintained to provide secure access and footing, and shall be free of oil, grease, or any obstruction which creates a slipping, falling, or fire hazard.

§ 214.521 Flagging equipment for on-track roadway maintenance machines and hi-rail vehicles.

Each on-track roadway maintenance machine and hi-rail vehicle shall have on board a flagging kit that complies with the operating rules of the railroad if:

(a) The equipment is operated over trackage subject to a railroad operating rule requiring flagging; and

(b)(1) The equipment is not part of a roadway work group; or

(2) The equipment is the lead or trailing piece of equipment in a roadway work group operating under the same occupancy authority.

[69 FR 8839, Feb. 26, 2004]

§ 214.523 Hi-rail vehicles.

(a) The hi-rail gear of all hi-rail vehicles shall be inspected for safety at least annually and with no more than 14 months between inspections. Tram, wheel wear, and gage shall be measured and, if necessary, adjusted to allow the vehicle to be safely operated.

(b) Each employer shall keep records pertaining to compliance with paragraph (a) of this section. Records may be kept on forms provided by the employer or by electronic means. The employer shall retain the record of each inspection until the next required inspection is performed. The records shall be made available for inspection and copying during normal business hours by representatives of FRA and States participating under part 212 of this chapter. The records may be kept on the hi-rail vehicle or at a location designated by the employer.

(c) A new hi-rail vehicle shall be equipped with:

(1) An automatic change-of-direction alarm or backup alarm that provides an audible signal at least three seconds long and distinguishable from the surrounding noise; and

(2) An operable 360-degree intermittent warning light or beacon mounted on the outside of the vehicle.

(d)(1) The operator of a hi-rail vehicle shall check the vehicle for compliance

with this subpart, prior to using the vehicle at the start of the operator's work shift.

(2) A non-complying condition that cannot be repaired immediately shall be tagged and dated in a manner prescribed by the employer and reported to the designated official.

(3) Non-complying automatic change-of-direction alarms, backup alarms, and 360-degree intermittent warning lights or beacons shall be repaired or replaced as soon as practicable within seven calendar days.

§ 214.525 Towing with on-track roadway maintenance machines or hi-rail vehicles.

(a) When used to tow pushcars or other maintenance-of-way equipment, each on-track roadway maintenance machine or hi-rail vehicle shall be equipped with a towing bar or other coupling device that provides a safe and secure attachment.

(b) An on-track roadway maintenance machine or hi-rail vehicle shall not be used to tow pushcars or other maintenance-of-way equipment if the towing would cause the machine or hi-rail vehicle to exceed the capabilities of its braking system. In determining the limit of the braking system, the employer must consider the track grade (slope), as well as the number and weight of pushcars or other equipment to be towed.

§ 214.527 On-track roadway maintenance machines; inspection for compliance and schedule for repairs.

(a) The operator of an on-track roadway maintenance machine shall check the machine components for compliance with this subpart, prior to using the machine at the start of the operator's work shift.

(b) Any non-complying condition that cannot be repaired immediately shall be tagged and dated in a manner prescribed by the employer and reported to the designated official.

(c) The operation of an on-track roadway maintenance machine with a non-complying condition shall be governed by the following requirements:

(1) An on-track roadway maintenance machine with headlights or work lights that are not in compliance may be operated for a period not exceeding 7 calendar days and only during the period between one-half hour before sunrise and one-half hour after sunset;

(2) A portable horn may be substituted for a non-complying or missing horn for a period not exceeding seven calendar days;

(3) A fire extinguisher readily available for use may temporarily replace a missing, defective or discharged fire extinguisher on a new on-track roadway maintenance machine for a period not exceeding 7 calendar days, pending the permanent replacement or repair of the missing, defective or used fire extinguisher;

(4) Non-complying automatic change-of-direction alarms, backup alarms, and 360-degree intermittent warning lights or beacons shall be repaired or replaced as soon as practicable within 7 calendar days; and

(5) A structurally defective or missing operator's seat shall be replaced or repaired within 24 hours or by the start of the machine's next tour of duty, whichever is later. The machine may be operated for the remainder of the operator's tour of duty if the defective or missing operator's seat does not prevent its safe operation.

§ 214.529 In-service failure of primary braking system.

(a) In the event of a total in-service failure of its primary braking system, an on-track roadway maintenance machine may be operated for the remainder of its tour of duty with the use of a secondary braking system or by coupling to another machine, if such operations may be done safely.

(b) If the total in-service failure of an on-track roadway maintenance machine's primary braking system occurs where other equipment is not available for coupling, the machine may, if it is safe to do so, travel to a clearance or repair point where it shall be placed out of service until repaired.

§ 214.531 Schedule of repairs; general.

Except as provided in §§ 214.527(c)(5), 214.529, and 214.533, an on-track roadway maintenance machine or hi-rail vehicle that does not meet all the requirements of this subpart shall be brought into compliance as soon as

practicable within seven calendar days. If repairs are not made within seven calendar days, the on-track roadway maintenance machine or hi-rail vehicle shall be placed out of on-track service.

§ 214.533 Schedule of repairs subject to availability of parts.

(a) The employer shall order a part necessary to repair a non-complying condition on an on-track roadway maintenance machine or a hi-rail vehicle by the end of the next business day following the report of the defect.

(b) When the employer cannot repair a non-complying condition as required by § 214.531 because of the temporary unavailability of a necessary part, the employer shall repair the on-track roadway maintenance machine or hi-rail vehicle within seven calendar days after receiving the necessary part. The employer may continue to use the on-track roadway maintenance machine or hi-rail vehicle with a non-complying condition until receiving the necessary part(s) for repair, subject to the requirements of § 214.503. However, if a non-complying condition is not repaired within 30 days following the report of the defect, the employer shall remove the on-track roadway maintenance machine or hi-rail vehicle from on-track service until it is brought into compliance with this subpart.

(c) If the employer fails to order a part necessary to repair the reported non-complying condition, or if it fails to install an available part within the required seven calendar days, the on-track roadway maintenance machine or hi-rail vehicle shall be removed from on-track service until brought into compliance with this subpart.

(d) Each employer shall maintain records pertaining to compliance with this section. Records may be kept on forms provided by the employer or by electronic means. The employer shall retain each record for at least one year, and the records shall be made available for inspection and copying during normal business hours by representatives of FRA and States participating under part 212 of this chapter. The records may be kept on the on-track roadway maintenance machine or hi-rail vehicle or at a location designated by the employer.

APPENDIX A TO PART 214—SCHEDULE OF CIVIL PENALTIES [1]

Section	Violation	Willful
Subpart B—Bridge Worker Safety Standards		
214.103 Fall protection:		
(i) Failure to provide fall protection	$5,000	$10,000
(ii) Failure to use fall protection	.....	2,500
214.105 Standards and practices:		
(a) General:		
(1) Fall protection used for other purposes	2,500	5,000
(2) Failure to remove from service	2,500	5,000
(3) Failure to protect from deterioration	2,500	5,000
(4) Failure to inspect and remove	5,000	10,000
(5) Failure to train	5,000	10,000
(6) Failure to provide for prompt rescue	5,000	10,000
(7) Failure to prevent damage	2,500	5,000
(8) Failure to use proper connectors	2,500	5,000
(9) Failure to use proper anchorages	2,500	5,000
(b) Fall arrest system:		
(1)–(17) Failure to provide conforming equipment	2,500	5,000
(c) Safety net systems:		
(1) Failure to install close to workplace	2,500	5,000
(2) Failure to provide fall arrest if over 30 feet	5,000	10,000
(3) Failure to provide for unobstructed fall	5,000	10,000
(4) Failure to test	2,500	5,000
(5) Failure to use proper equipment	2,500	5,000
(6) Failure to prevent contact with surface below	5,000	10,000
(7) Failure to properly install	5,000	10,000
(8) Failure to remove defective nets	5,000	10,000
(9) Failure to inspect	5,000	10,000
(10) Failure to remove objects	1,000	2,500
(11)–(13) Failure to use conforming equipment	2,500	10,000
214.107 Working over water:		
(a)(i) Failure to provide life vest	5,000	10,000

Section	Violation	Willful
(ii) Failure to use life vest	.....	1,500
(c) Failure to inspect	2,500	5,000
(e)(i) Failure to provide ring bouys	5,000	10,000
(ii) Failure to use ring bouys	.....	1,500
(f)(i) Failure to provide skiff	1,000	2,500
(ii) Failure to use skiff	.....	1,500
214.109 Scaffolding:		
(a)–(f) Failure to provide conforming equipment	2,500	5,000
214.113 Head protection:		
(a)(i) Failure to provide	2,500	5,000
(ii) Failure to use	.....	1,500
(b) or (c) Failure to provide conforming equipment	2,500	5,000
214.115 Foot protection:		
(a)(i) Failure to require use of	2,500	5,000
(ii) Failure to use	.....	1,500
214.117 Eye and face protection:		
(a)(i) Failure to provide	2,500	5,000
(ii) Failure to use	.....	1,500
(b) Failure to use conforming equipment	2,500	5,000
(c) Use of defective equipment	2,500	5,000
(d) Failure to provide for corrective lenses	2,500	5,000
Subpart C—Roadway Worker Protection Rule		
214.303 Railroad on-track safety programs, generally:		
(a) Failure of a railroad to implement an On-track Safety Program	10,000	20,000
(b) On-track Safety Program of a railroad includes no internal monitoring procedure	5,000	10,000
214.305 Compliance Dates:		
Failure of a railroad to comply by the specified dates	5,000	10,000
214.307 Review and approval of individual on-track safety programs by FRA:		
(a)(i) Failure to notify FRA of adoption of On-track Safety Program	1,000	5,000
(ii) Failure to designate primary person to contact for program review	1,000	2,000
214.309 On-track safety program documents:		
(1) On-track Safety Manual not provided to prescribed employees	2,000	5,000
(2) On-track Safety Program documents issued in fragments	2,000	5,000
214.311 Responsibility of employers:		
(b) Roadway worker required by employer to foul a track during an unresolved challenge	5,000	10,000
(c) Roadway workers not provided with written procedure to resolve challenges of on-track safety procedures	5,000	10,000
214.313 Responsibility of individual roadway workers:		
(b) Roadway worker fouling a track when not necessary in the performance of duty	.....	1,000
(c) Roadway worker fouling a track without ascertaining that provision is made for on-track safety	.....	1,500
(d) Roadway worker failing to notify employer of determination of improper on-track safety provisions	.....	3,000
214.315 Supervision and communication:		
(a) Failure of employer to provide job briefing	2,000	10,000
(b) Incomplete job briefing	2,000	5,000
(c)(i) Failure to designate roadway worker in charge of roadway work group	2,000	5,000
(ii) Designation of more than one roadway worker in charge of one roadway work group	1,000	2,000
(iii) Designation of non-qualified roadway worker in charge of roadway work group	3,000	6,000
(d)(i) Failure to notify roadway workers of on-track safety procedures in effect	3,000	6,000
(ii) Incorrect information provided to roadway workers regarding on-track safety procedures in effect	3,000	6,000
(iii) Failure to notify roadway workers of change in on-track safety procedures	3,000	6,000
(e)(i) Failure of lone worker to communicate with designated employee for daily job briefing	.....	1,500
(ii) Failure of employer to provide means for lone worker to receive daily job briefing	3,000	6,000
214.317 On-track safety procedures, generally:		
On-track safety rules conflict with this part	5,000	10,000
214.319 Working limits, generally:		
(a) Non-qualified roadway worker in charge of working limits	5,000	10,000
(b) More than one roadway worker in charge of working limits on the same track segment	2,000	5,000
(c)(1) Working limits released without notifying all affected roadway workers	5,000	10,000
(2) Working limits released before all affected roadway workers are otherwise protected	5,000	10,000
214.321 Exclusive track occupancy:		
(b) Improper transmission of authority for exclusive track occupancy	2,000	5,000
(b)(1) Failure to repeat authority for exclusive track occupancy to issuing employee	.....	1,500
(2) Failure to retain possession of written authority for exclusive track occupancy	.....	1,000
(3) Failure to record authority for exclusive track occupancy when issued	.....	2,000
(c) Limits of exclusive track occupancy not identified by proper physical features	2,000	4,000
(d)(1) Movement authorized into limits of exclusive track occupancy without authority of roadway worker in charge	5,000	10,000
(2) Movement authorized within limits of exclusive track occupancy without authority of roadway worker in charge	5,000	10,000
(3) Movement within limits of exclusive track occupancy exceeding restricted speed without authority of roadway worker in charge	5,000	10,000

Section	Violation	Willful
214.323 Foul time:		
(a) Foul time authority overlapping movement authority of train or equipment	5,000	10,000
(b) Failure to repeat foul time authority to issuing employee	.....	1,500
214.325 Train coordination:		
(a) Train coordination limits established where more than one train is authorized to operate	1,500	4,000
(b)(1) Train coordination established with train not visible to roadway worker at the time	.....	1,500
(2) Train coordination established with moving train	.....	1,500
(3) Coordinated train moving without authority of roadway worker in charge	2,000	5,000
(4) Coordinated train releasing movement authority while working limits are in effect	3,000	6,000
214.327 Inaccessible track:		
(a) Improper control of entry to inaccessible track	3,000	6,000
(5) Remotely controlled switch not properly secured by control operator	3,000	6,000
(b) Train or equipment moving within inaccessible track limits without permission of roadway worker in charge	3,000	6,000
(c) Unauthorized train or equipment located within inaccessible track limits	2,000	5,000
214.329 Train approach warning provided by watchmen/lookouts:		
(a) Failure to give timely warning of approaching train	.....	5,000
(b)(1) Failure of watchman/lookout to give full attention to detecting approach of train	.....	3,000
(2) Assignment of other duties to watchman/lookout	3,000	5,000
(c) Failure to provide proper warning signal devices	2,000	5,000
(d) Failure to maintain position to receive train approach warning signal	.....	2,000
(e) Failure to communicate proper warning signal	1,500	3,000
(f)(1) Assignment of non-qualified person as watchman/lookout	3,000	5,000
(2) Non-qualified person accepting assignment as watchman/lookout	.....	1,500
(g) Failure to properly equip a watchman/lookout	2,000	4,000
214.331 Definite train location:		
(a) Definite train location established where prohibited	3,000	5,000
(b) Failure to phase out definite train location by required date	3,000	5,000
(d)(1) Train location information issued by unauthorized person	2,000	5,000
(2) Failure to include all trains operated on train location list	3,000	5,000
(5) Failure to clear a by ten minutes at the last station at which time is shown	.....	2,000
(6) Train passing station before time shown in train location list	3,000	5,000
(7) Non-qualified person using definite train location to establish on- track safety	2,000	3,000
214.333 Informational line-ups of trains:		
(a) Informational line-ups of trains used for on-track safety where prohibited	3,000	5,000
(b) Informational line-up procedures inadequate to protect roadway workers	5,000	10,000
(c) Failure to discontinue informational line-ups by required date	5,000	10,000
214.335 On-track safety procedures for roadway work groups :		
(a) Failure to provide on-track safety for a member of a roadway work group	3,000	5,000
(b) Member of roadway work group fouling a track without authority of employee in charge	.....	2,000
(c) Failure to provide train approach warning or working limits on adjacent track where required	3,000	5,000
214.337 On-track safety procedures for lone workers:		
(b) Failure by employer to permit individual discretion in use of individual train detection	5,000	10,000
(c)(1) Individual train detection used by non-qualified employee	2,000	4,000
(2) Use of individual train detection while engaged in heavy or distracting work	.....	2,000
(3) Use of individual train detection in controlled point or manual interlocking	.....	2,000
(4) Use of individual train detection with insufficient visibility	.....	2,000
(5) Use of individual train detection with interfering noise	.....	2,000
(6) Use of individual train detection while a train is passing	.....	3,000
(d) Failure to maintain access to place of safety clear of live tracks	.....	2,000
(e) Lone worker unable to maintain vigilant lookout	.....	2,000
(f)(1) Failure to prepare written statement of on-track safety	.....	1,500
(2) Incomplete written statement of on-track safety	.....	1,000
(3) Failure to produce written statement of on-track safety to FRA	.....	1,500
214.339 Audible warning from trains:		
(a) Failure to require audible warning from trains	2,000	4,000
(b) Failure of train to give audible warning where required	1,000	3,000
214.341 Roadway maintenance machines:		
(a) Failure of on-track safety program to include provisions for safety near roadway maintenance machines	3,000	5,000
(b) Failure to provide operating instructions	2,000	4,000
(1) Assignment of non-qualified employee to operate machine	2,000	5,000
(2) Operator unfamiliar with safety instructions for machine	2,000	5,000
(3) Roadway worker working with unfamiliar machine	2,000	5,000
(c) Roadway maintenance machine not clear of passing trains	3,000	6,000
214.343 Training and qualification, general:		
(a)(1) Failure of railroad program to include training provisions	5,000	10,000
(2) Failure to provide initial training	3,000	6,000
(b) Failure to provide annual training	2,500	5,000
(c) Assignment of non-qualified railroad employees to provide on-track safety	4,000	8,000
(d)(1) Failure to maintain records of qualifications	2,000	4,000
(2) Incomplete records of qualifications	1,000	3,000
(3) Failure to provide records of qualifications to FRA	2,000	4,000

Section	Violation	Willful
214.345 Training for all roadway workers		
214.347 Training and qualification for lone workers		
214.349 Training and qualification of watchmen/lookouts		
214.351 Training and qualification of flagmen		
214.353 Training and qualification of roadway workers who provide on-track safety for roadway work groups		
214.355 Training and qualification in on-track safety for operators of roadway maintenance machines		
Subpart D—On-Track Roadway Maintenance Machines and Hi-Rail Vehicles		
214.503 Good-faith challenges; procedures for notification and resolution:		
(a) Failure of employee to notify employer that the machine or vehicle does not comply with this subpart or has a condition inhibiting safe operation	.....	4,000
(b) Roadway worker required to operate machine or vehicle when good-faith challenge not resolved	5,000	10,000
(c) Failure of employer to have or follow written procedures to resolve good-faith challenges	5,000	10,000
214.505 Required environmental control and protection systems for new on-track roadway maintenance machines with enclosed cabs:		
(a) Failure to equip new machines with required systems	5,000	10,000
(b) Failure of new or existing machines to protect employees from exposure to air contaminants	5,000	10,000
(c) Failure of employer to maintain required list of machines or make list available	2,000	4,000
(d) Removal of ''designated machine'' from list before retired or sold	2,000	4,000
(e) Personal respiratory protective equipment not provided when ventilation system fails	5,000	10,000
(f) Personal respiratory protective equipment fails to meet required standards	5,000	10,000
(g) Other new machines with enclosed cabs not equipped with operable heating and ventilation systems	5,000	10,000
(h) Non-enclosed station not equipped with covering, where feasible	5,000	10,000
214.507 Required safety equipment for new on-track roadway maintenance machines:		
(a)(1)–(5) Failure to equip new machine or provide protection as specified in these paragraphs	5,000	10,000
(a)(6)–(7) Failure to equip new machine with first-aid kit or operative and charged fire extinguisher	2,500	5,000
(b) Position for operator to stand not properly equipped to provide safe and secure position	5,000	10,000
(c) New machine not equipped with accurate speed indicator, as required.	2,500	5,000
(d) As-built light weight not conspicuously displayed on new machine	2,500	5,000
214.509 Required visual illumination and reflective devices for new on-track roadway maintenance machines	2,500	5,000
214.511 Required audible warning devices for new on-track roadway maintenance machines	5,000	10,000
214.513 Retrofitting of existing on-track roadway maintenance machines; general:		
(a) Failure to provide safe and secure position and protection from moving parts 2,000 4,000 inside cab for each roadway worker transported on machine	5,000	10,000
(b) Horn or other audible warning device is missing, inoperable, or has non-compliant triggering mechanism	2,500	5,000
(c) Illumination device or portable light missing, inoperable, improperly secured, or incapable of illuminating track as required	2,500	5,000
214.515 Overhead covers for existing on-track roadway maintenance machines:		
(a) Failure to repair, reinstall, or maintain overhead cover as required	5,000	10,000
(b) Failure to provide written response to operator's request within 60 days	2,000	4,000
214.517 Retrofitting of existing on-track roadway maintenance machines manufactured on or after January 1, 1991:		
(a) Failure to equip machine with change-of-direction alarm or rearward viewing device.	5,000	10,000
(b) Failure to equip machine with operative heater	5,000	10,000
(c) Failure to display light weight of machine as required	2,500	5,000
(d) Failure to equip machine with reflective material, reflective device, or operable brake lights	5,000	10,000
(e) Failure to install or replace safety glass as required	5,000	10,000
(f) Failure to equip machine with turntable restraint device or warning light as required	5,000	10,000
214.518 Safe and secure position for riders	5,000	10,000
214.519 Floors, decks, stairs, and ladders for on-track roadway maintenance machines	5,000	10,000
214.521 Flagging equipment for on-track roadway maintenance machines and hi-rail vehicles	2,500	5,000
214.523 Hi-rail vehicles:		
(a) Failure to inspect hi-rail gear annually	5,000	10,000
(b) Failure to maintain inspection record or make record available to FRA	2,000	4,000
(c) Failure to equip new hi-rail vehicle with alarm and light or beacon as required	2,500	5,000
(d)(2) Failure of operator to tag, date or report non-complying condition	2,000	4,000
(d)(3) Failure to repair or replace non-complying alarms, lights or beacons as required	2,500	5,000
214.525 Towing with on-track roadway maintenance machines or hi-rail vehicles	5,000	10,000
214.527 On-track roadway maintenance machines; inspection for compliance and schedule for repairs:		
(a) Failure of operator to check on-track roadway maintenance machine for compliance	2,000	4,000
(b) Failure of oeprator to tag, date, or report noncomplying condition	2,000	4,000

Section	Violation	Willful
(c)(1)–(4) Failure to meet requirements for operating on-track roadway maintenance machine with non-complying headlights, work lights, horn, fire extinguisher, alarm, warning light, or beacon	2,500	5,000
(c)(5) Failure to repair or replace defective or missing operator's seat within required time period	5,000	10,000
214.529 In-service failure of primary braking system	5,000	10,000
214.531 Schedule of repairs; general	2,500	5,000
214.533 Schedule of repairs subject to availability of parts:		
(a)–(c) Failure to order necessary part(s), make repair(s), or remove on-track roadway maintenance machine or hi-rail vehicle from service as required	2,500	5,000
(d) Failure to maintain record or make record available to FRA	2,000	4,000

[1] A penalty may be assessed against an individual only for a willful violation. The Administrator reserves the right to assess a penalty of up to $27,000 for any violation where circumstances warrant. See 49 CFR part 209, appendix A.

[57 FR 28127, June 24, 1992, as amended at 61 FR 65981, Dec. 16, 1996; 63 FR 11620, Mar. 10, 1998; 68 FR 44412, July 28, 2003; 69 FR 8839, Feb. 26, 2004; 69 FR 30593, May 28, 2004]

PART 215—RAILROAD FREIGHT CAR SAFETY STANDARDS

Subpart A—General

Sec.
215.1 Scope of part.
215.3 Application.
215.5 Definitions.
215.7 Prohibited acts.
215.9 Movement of defective cars for repair.
215.11 Designated inspectors.
215.13 Pre-departure inspection.
215.15 Periodic inspection.

Subpart B—Freight Car Components

215.101 Scope.

SUSPENSION SYSTEM

215.103 Defective wheel.
215.105 Defective axle.
215.107 Defective plain bearing box: General.
215.109 Defective plain bearing box: Journal lubrication system.
215.111 Defective plain bearing.
215.113 Defective plain bearing wedge.
215.115 Defective roller bearing.
215.117 Defective roller bearing adapter.
215.119 Defective freight car truck.

CAR BODIES

215.121 Defective car body.

DRAFT SYSTEM

215.123 Defective couplers.
215.125 Defective uncoupling device.
215.127 Defective draft arrangement.
215.129 Defective cushioning device.

Subpart C—Restricted Equipment

215.201 Scope.
215.203 Restricted cars.

Subpart D—Stenciling

215.301 General.
215.303 Stenciling of restricted cars.
215.305 Stenciling of maintenance-of-way equipment.

APPENDIX A TO PART 215—RAILROAD FREIGHT CAR COMPONENTS
APPENDIX B TO PART 215—SCHEDULE OF CIVIL PENALTIES
APPENDIX C TO PART 215—FRA FREIGHT CAR STANDARDS DEFECT CODE
APPENDIX D TO PART 215—PRE-DEPARTURE INSPECTION PROCEDURE

AUTHORITY: 49 U.S.C. 20103, 20107; 28 U.S.C. 2461, note; and 49 CFR 1.49.

SOURCE: 44 FR 77340, Dec. 31, 1979, unless otherwise noted.

Subpart A—General

§215.1 Scope of part.

This part prescribes minimum Federal safety standards for railroad freight cars.

§215.3 Application.

(a) Except as provided in paragraphs (b) and (c) of this section, this part applies to each railroad freight car in service on:

(1) Standard gage track of a railroad; or

(2) Any other standard gage track while the car is being operated by, or is otherwise under the control of, a railroad.

(b) Sections 215.15 and 215.303 of this part do not apply to any car:

(1) Owned by a Canadian or Mexican Railroad; and

(2) Having a Canadian or Mexican reporting mark and car number.

(c) This part does not apply to a railroad freight car that is:

(1) Operated solely on track inside an industrial or other non-railroad installation; or

(2) Used exclusively in dedicated service as defined in § 215.5(d) of this part; or

(3) Maintenance-of-way equipment (including self-propelled maintenance-of-way equipment) if that equipment is not used in revenue service and is stenciled in accordance with § 215.305 of this part.

(4) Operated in a passenger train and that is inspected, tested, maintained, and operated pursuant to the requirements contained in part 238 of this chapter.

[44 FR 77340, Dec. 31, 1979, as amended at 65 FR 41305, July 3, 2000]

§ 215.5 Definitions.

As used in this part:

(a) *Break* means a fracture resulting in complete separation into parts;

(b) *Cracked* means fractured without complete separation into parts, except that castings with shrinkage cracks or hot tears that do not significantly diminish the strength of the member are not considered to be ''cracked'';

(c) *Railroad freight car* means a car designed to carry freight, or railroad personnel, by rail and includes a:

(1) Box car;

(2) Refrigerator car;

(3) Ventilator car;

(4) Stock car;

(5) Gondola car;

(6) Hopper car;

(7) Flat car;

(8) Special car;

(9) Caboose car;

(10) Tank car; and

(11) Yard car.

(d) *Dedicated service* means the exclusive assignment of cars to the transportation of freight between specified points under the following conditions:

(1) The cars are operated—

(i) Primarily on track that is inside an industrial or other non-railroad installation; and

(ii) Only occasionally over track of a railroad;

(2) The cars are not operated—

(i) At speeds of more than 15 miles per hour; and

(ii) Over track of a railroad—

(A) For more than 30 miles in one direction; or

(B) On a round trip of more than 60 miles;

(3) The cars are not freely interchanged among railroads;

(4) The words ''Dedicated Service'' are stenciled, or otherwise displayed, in clearly legible letters on each side of the car body;

(5) The cars have been examined and found safe to operate in dedicated service; and

(6) The railroad must—

(i) Notify the FRA in writing that the cars are to be operated in dedicated service;

(ii) Identify in that notice—

(A) The railroads affected;

(B) The number and type of cars involved;

(C) The commodities being carried; and

(D) The territorial and speed limits within which the cars will be operated; and

(iii) File the notice required by this paragraph not less than 30 days before the cars operate in dedicated service;

(e) *In service* when used in connection with a railroad freight car, means each railroad freight car subject to this part unless the car:

(1) Has a ''bad order'' or ''home shop for repairs'' tag or card containing the prescribed information attached to each side of the car and is being handled in accordance with § 215.9 of this part;

(2) Is in a repair shop or on a repair track;

(3) Is on a storage track and is empty; or

(4) Has been delivered in interchange but has not been accepted by the receiving carrier.

(f) *Railroad* means all forms of non-highway ground transportation that run on rails or electromagnetic guideways, including (1) commuter or other short-haul rail passenger service in a metropolitan or suburban area, and (2) high speed ground transportation systems that connect metropolitan areas, without regard to whether they use new technologies not associated with traditional railroads. Such term does not include rapid transit operations

within an urban area that are not connected to the general railroad system of transportation.

(g) *State inspector* means an inspector who is participating in investigative and surveillance activities under section 206 of the Federal Railroad Safety Act of 1970 (45 U.S.C. 435).

[44 FR 77340, Dec. 31, 1979, as amended at 45 FR 26710, Apr. 21, 1980; 54 FR 33228, Aug. 14, 1989]

§215.7 Prohibited acts.

Any person (an entity of any type covered under 1 U.S.C. 1, including but not limited to the following: a railroad; a manager, supervisor, official, or other employee or agent of a railroad; any owner, manufacturer, lessor, or lessee of railroad equipment, track, or facilities; any independent contractor providing goods or services to a railroad; and any employee of such owner, manufacturer, lessor, lessee, or independent contractor) who violates any requirement of this part or causes the violation of any such requirement is subject to a civil penalty of at least $550 and not more than $16,000 per violation, except that: Penalties may be assessed against individuals only for willful violations, and, where a grossly negligent violation or a pattern of repeated violations has created an imminent hazard of death or injury to persons, or has caused death or injury, a penalty not to exceed $27,000 per violation may be assessed. Each day a violation continues shall constitute a separate offense. See appendix B to this part for a statement of agency civil penalty policy.

[53 FR 28599, July 28, 1988, as amended at 53 FR 52925, Dec. 29, 1988; 63 FR 11620, Mar. 10, 1998; 69 FR 30593, May 28, 2004; 72 FR 51196, Sept. 6, 2007]

§215.9 Movement of defective cars for repair.

(a) A railroad freight car which has any component described as defective in this part may be moved to another location for repair only after the railroad has complied with the following:

(1) A person designated under §215.11 shall determine:

(i) That it is safe to move the car; and

(ii) The maximum speed and other restrictions necessary for safely conducting the movement;

(2)(i) The person in charge of the train in which the car is to be moved shall be notified in writing and inform all other crew members of the presence of the defective car and the maximum speed and other restrictions determined under paragraph (a)(1)(ii) of this section.

(ii) A copy of the tag or card described in paragraph (a)(3) of this section may be used to provide the notification required by paragraph (a)(2)(i) of this section.

(3) A tag or card bearing the words ''bad order'' or ''home shop for repairs'' and containing the following information, shall be securely attached to each side of the car—

(i) The reporting mark and car number;

(ii) The name of the inspecting railroad;

(iii) The inspection location and date;

(iv) The nature of each defect;

(v) Movement restrictions;

(vi) The destination for shopping or repair; and

(vii) The signature of a person designated under §215.11.

(b)(1) The tag or card required by paragraph (a)(3) of this section may only be removed from the car by a person designated under §215.11 of this part.

(2) A record or copy of each tag or card attached to or removed from a car shall be retained for 90 days and, upon request, shall be made available within 15 calendar days for inspection by FRA or State inspectors.

(3) Each tag or card removed from a car shall contain a notification stating the date, location, reason for its removal, and the signature of the person who removed it from the car. These recordkeeping requirements have been approved by the Office of Management and Budget in accordance with the Federal Reports Act of 1942.

(c) Movement of a freight car under paragraph (a) of this section may be made only for the purpose of effecting repairs. If the car is empty, it may not be placed for loading. If the car is loaded, it may not be placed for unloading

unless unloading is consistent with determinations made and restrictions imposed under paragraph (a)(1) of this section and—

(1) The car is consigned for a destination on the line of haul between the point where the car was found defective and the point where repairs are made; or

(2) Unloading is necessary for the safe repair of the car.

(d) Nothing in this section authorizes the movement of a freight car subject to a Special Notice for Repairs unless the movement is made in accordance with the restrictions contained in the Special Notice.

[44 FR 77340, Dec. 31, 1979; 45 FR 26710, Apr. 21, 1980]

§ 215.11 Designated inspectors.

(a) Each railroad that operates railroad freight cars to which this part applies shall designate persons qualified to inspect railroad freight cars for compliance with this part and to make the determinations required by § 215.9 of this part.

(b) Each person designated under this section shall have demonstrated to the railroad a knowledge and ability to inspect railroad freight cars for compliance with the requirements of this part and to make the determinations required by § 215.9 of this part.

(c) With respect to designations under this section, each railroad shall maintain written records of:

(1) Each designation in effect; and

(2) The basis for each designation.

[45 FR 26710, Apr. 21, 1980]

§ 215.13 Pre-departure inspection.

(a) At each location where a freight car is placed in a train, the freight car shall be inspected before the train departs. This inspection may be made before or after the car is placed in the train.

(b) At a location where an inspector designated under § 215.11 is on duty for the purpose of inspecting freight cars, the inspection required by paragraph (a) of this section shall be made by that inspector to determine whether the car is in compliance with this part.

(c) At a location where a person designated under § 215.11 is not on duty for the purpose of inspecting freight cars, the inspection required by paragraph (a) shall, as a minimum, be made for those conditions set forth in appendix D to this part.

(d) Performance of the inspection prescribed by this section does not relieve a railroad of its liability under § 215.7 for failure to comply with any other provision of this part.

[45 FR 26710, Apr. 21, 1980]

§ 215.15 Periodic inspection.

(a) After June 30, 1980, a railroad may not place or continue in service a freight car that has not received an initial periodic inspection in accordance with 49 CFR 215.25, as in effect on October 6, 1976 (41 FR 44044), unless—

(1) The car is a high utilization car built or reconditioned after December 31, 1977; or

(2) The car is a non-high utilization car built or reconditioned after December 31, 1971.

(b) A freight car that has received an initial periodic inspection under paragraph (a) of this section shall be stenciled to so indicate in accordance with 49 CFR 215.11 and appendix C of this part, as in effect on October 6, 1976 (41 FR 44044). This stenciling need not be retained on the car after June 30, 1981.

(c) As used in this section, ''high utilization car'' means a car—

(1) Specifically equipped to carry trucks, automobiles, containers, trailers, or removable trailer bodies for the transportation of freight; or

(2) Assigned to a train that operates in a continuous round trip cycle between the same two points.

Subpart B—Freight Car Components

§ 215.101 Scope.

This subpart contains safety requirements prohibiting a railroad from placing or continuing in service a freight car that has certain defective components.

SUSPENSION SYSTEM

§ 215.103 Defective wheel.

A railroad may not place or continue in service a car, if—

(a) A wheel flange on the car is worn to a thickness of ⅞ of an inch, or less, at a point ⅜ of an inch above the tread of the wheel;

(b) The height of a wheel flange on the car, from the tread to the top of the flange, is 1½ inches, or more;

(c) The thickness of a rim of a wheel on the car is 11/16 of an inch, or less;

(d) A wheel rim, flange, plate, or hub area on the car has a crack or break;

(e) A wheel on the car has a chip or gouge in the flange that is 1½ inches in length and ½ inch in width, or more;

(f) A wheel on the car has—

(1) A slid flat or shelled spot that is more than 2½ inches in length; or

(2) Two adjoining flat or shelled spots each of which is more than two inches in length;

(g) A wheel on the car shows evidence of being loose such as oil seepage on the back hub or back plate;

(h) A wheel on the car shows signs of having been overheated as evidenced by a reddish brown discoloration, to a substantially equal extent on both the front and the back face of the rim, that extends on either face more than four inches into the plate area measured from the inner edge of the front or back face of the rim; or,

(i) A wheel on the car has been welded unless the car is being moved for repair in accordance with §215.9 of this part.

[44 FR 77340, Dec. 31, 1979, as amended at 50 FR 13382, Apr. 4, 1985]

§215.105 Defective axle.

A railroad may not place or continue in service a car, if—

(a) An axle on the car has a crack or is broken;

(b) An axle on the car has a gouge in the surface that is—

(1) Between the wheel seats; and

(2) More than one-eighth inch in depth;

(c) An axle on the car, used in conjunction with a plain bearing, has an end collar that is broken or cracked;

(d) A journal on the car shows evidence of overheating, as evidenced by a pronounced blue black discoloration; or

(e) The surface of the plain bearing journal on the axle, or the fillet on the axle, has—

(1) A ridge;

(2) A depression;

(3) A circumferential score;

(4) Corrugation;

(5) A scratch;

(6) A continuous streak;

(7) Pitting;

(8) Rust; or

(9) Etching.

§215.107 Defective plain bearing box: General.

A railroad may not place or continue in service a car, if the car has—

(a) A plain bearing box that does not contain visible free oil;

(b) A plain bearing box lid that is missing, broken, or open except to receive servicing; or

(c) A plain bearing box containing foreign matter, such as dirt, sand, or coal dust, that can reasonably be expected to—

(1) Damage the bearing; or

(2) Have a detrimental effect on the lubrication of the journal and the bearings.

§215.109 Defective plain bearing box: Journal lubrication system.

A railroad may not place or continue in service a car, if the car has a plain bearing box with a lubricating pad that—

(a) Has a tear extending half the length or width of the pad, or more;

(b) Shows evidence of having been scorched, burned, or glazed;

(c) Contains decaying or deteriorated fabric that impairs proper lubrication of the pad;

(d) Has—

(1) An exposed center core (except by design); or

(2) Metal parts contacting the journal; or

(e) Is—

(1) Missing; or

(2) Not in contact with the journal.

§215.111 Defective plain bearing.

A railroad may not place or continue in service a car, if the car has a plain bearing—

(a) That is missing, cracked, or broken;

(b) On which the bearing liner—

(1) Is loose; or

(2) Has a broken out piece; or

(c) That shows signs of having been overheated, as evidenced by—

(1) Melted babbitt;

(2) Smoke from hot oil; or

(3) Journal surface damage.

§ 215.113 Defective plain bearing wedge.

A railroad may not place or continue in service a car, if a plain bearing wedge on that car is—

(a) Missing;

(b) Cracked;

(c) Broken; or

(d) Not located in its design position.

§ 215.115 Defective roller bearing.

(a) A railroad may not place or continue in service a car, if the car has—

(1) A roller bearing that shows signs of having been overheated as evidenced by—

(i) Discoloration; or

(ii) Other telltale signs of overheating such as damage to the seal or distortion of any bearing component;

(2) A roller bearing with a—

(i) Loose or missing cap screw; or

(ii) Broken, missing, or improperly applied cap screw lock; or

(3) A roller bearing with a seal that is loose or damaged, or permits leakage of lubricant in clearly formed droplets.

(b)(1) A railroad may not continue in service a car that has a roller bearing whose truck was involved in a derailment unless the bearing has been inspected and tested by:

(i) Visual examination to determine whether it shows any sign of damage; and

(ii) Spinning freely its wheel set or manually rotating the bearing to determine whether the bearing makes any unusual noise.

(2) The roller bearing shall be disassembled from the axle and inspected internally if—

(i) It shows any external sign of damage;

(ii) It makes any unusual noise when its wheel set is spun freely or the bearing is manually rotated;

(iii) Its truck was involved in a derailment at a speed of more than 10 miles per hour; or

(iv) Its truck was dragged on the ground for more than 200 feet.

(3) Each defective roller bearing shall be repaired or replaced before the car is placed back in service.

[44 FR 77340, Dec. 31, 1979, as amended at 45 FR 26711, Apr. 21, 1980]

§ 215.117 Defective roller bearing adapter.

A railroad may not place or continue in service a car, if the car has a roller bearing adapter that is—

(a) Cracked or broken;

(b) Not in its design position; or

(c) Worn on the crown of the adapter to the extent that the frame bears on the relief portion of the adapter, as shown in the figure below (see figure 1).

§ 215.119 Defective freight car truck.

A railroad may not place or continue in service a car, if the car has—

(a) A side frame or bolster that—

(1) Is broken; or

(2) Has a crack of ¼ of an inch or more in the transverse direction on a tension member;

(b) A truck equipped with a snubbing device that is ineffective, as evidenced by—

(1) A snubbing friction element that is worn beyond a wear indicator;

(2) A snubber wear plate that is loose, missing (except by design), or worn through;

(3) A broken or missing snubber activating spring; or

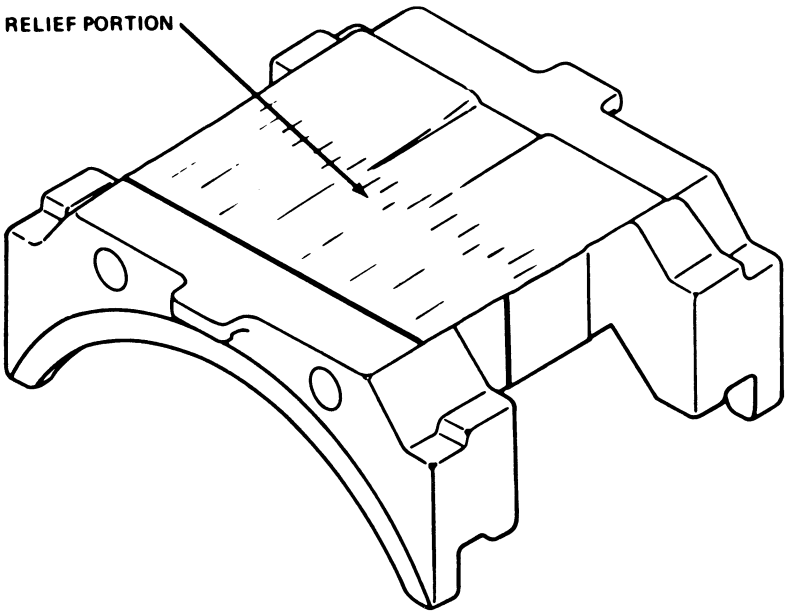

FIGURE 1

(4) Snubber unit that is broken, or in the case of hydraulic units, is broken or leaking clearly formed droplets of oil or other fluid.

(c) A side bearing in any of the following conditions:

(1) Part of the side bearing assembly is missing or broken;

(2) The bearings at one end of the car, on both sides, are in contact with the body bolster (except by design);

(3) The bearings at one end of the car have a total clearance from the body bolster of more than ¾ of an inch; or

(4) At diagonally opposite sides of the car, the bearings have a total clearance from the body bolsters of more than ¾ of an inch;

(d) Truck springs—

(1) That do not maintain travel or load;

(2) That are compressed solid; or

(3) More than one outer spring of which is broken, or missing, in any spring cluster;

(e) Interference between the truck bolster and the center plate that prevents proper truck rotations; or

(f) Brake beam shelf support worn so excessively that it does not support the brake beam.

CAR BODIES

§ 215.121 Defective car body.

A railroad may not place or continue in service a car, if:

(a) Any portion of the car body, truck, or their appurtenances (except wheels) has less than a 2½ inch clearance from the top of rail;

(b) The car center sill is:

(1) Broken;

(2) Cracked more than 6 inches; or

(3) Permanently bent or buckled more than 2½ inches in any six foot length;

(c) The car has a coupler carrier that is:

(1) Broken;

(2) Missing;

(3) Non-resilient and the coupler has a type F head.

(d) After December 1, 1983, the car is a box car and its side doors are not equipped with operative hangers, or the

equivalent, to prevent the doors from becoming disengaged.

(e) The car has a center plate:

(1) That is not properly secured;

(2) Any portion of which is missing; or

(3) That is broken; or

(4) That has two or more cracks through its cross section (thickness) at the edge of the plate that extend to the portion of the plate that is obstructed from view while the truck is in place; or

(f) The car has a broken sidesill, crossbearer, or body bolster.

[44 FR 77340, Dec. 31, 1979, as amended at 47 FR 53737, Dec. 29, 1982]

DRAFT SYSTEM

§ 215.123 Defective couplers.

A railroad may not place or continue in service a car, if—

(a) The car is equipped with a coupler shank that is bent out of alignment to the extent that the coupler will not couple automatically with the adjacent car;

(b) The car has a coupler that has a crack in the highly stressed junction area of the shank and head as shown in the figure below (see figure 2).

(c) The car has a coupler knuckle that is broken or cracked on the inside pulling face of the knuckle.

(d) The car has a knuckle pin or knuckle thrower that is:

(1) Missing; or

(2) Inoperative; or

(e) The car has a coupler retainer pin lock that is—

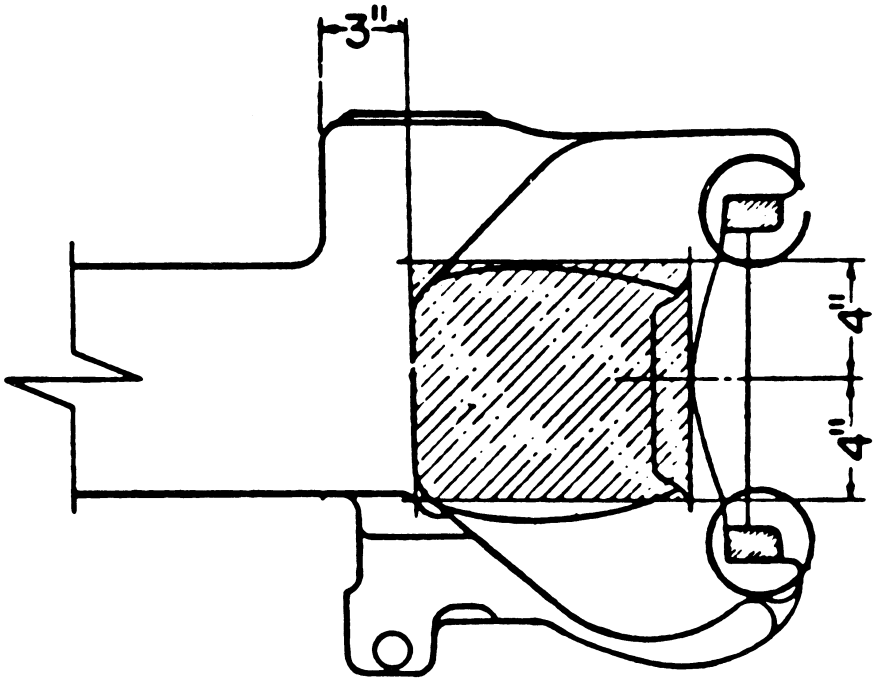

Figure 2

(1) Missing; or

(2) Broken; or

(f) The car has a coupler with any of the following conditions:

(1) The locklift is inoperative;

(2) The coupler assembly does not have anticreep protection to prevent unintentional unlocking of the coupler lock; or

(3) The coupler lock is—

(i) Missing;

(ii) Inoperative;

(iii) Bent;

(iv) Cracked; or

(v) Broken.

§215.125 Defective uncoupling device.

A railroad may not place or continue in service a car, if the car has an uncoupling device without sufficient vertical and lateral clearance to prevent—

(a) Fouling on curves; or

(b) Unintentional uncouplings.

§215.127 Defective draft arrangement.

A railroad may not place or continue in service a car, if—

(a) The car has a draft gear that is inoperative;

(b) The car has a broken yoke;

(c) An end of car cushioning unit is—

(1) Leaking clearly formed droplets; or

(2) Inoperative;

(d) A vertical coupler pin retainer plate—

(1) Is missing (except by design); or

(2) Has a missing fastener;

(e) The car has a draft key, or draft key retainer, that is—

(1) Inoperative; or

(2) Missing; or

(f) The car has a missing or broken follower plate.

§ 215.129 Defective cushioning device.

A railroad may not place or continue in service a car if it has a cushioning device that is—

(a) Broken;

(b) Inoperative; or

(c) Missing a part—

unless its sliding components have been effectively immobilized.

Subpart C—Restricted Equipment

§ 215.201 Scope.

This subpart contains requirements restricting the use of certain railroad freight cars.

§ 215.203 Restricted cars.

(a) This section restricts the operation of any railroad freight car that is—

(1) More than 50 years old, measured from the date of original construction;

(2) Equipped with any design or type component listed in appendix A to this part; or

(3) Equipped with a Duryea underframe constructed before April 1, 1950, except for a caboose which is operated as the last car in a train.

(b) A railroad may not place or continue in service a railroad freight car described in paragraph (a) of this section, except under conditions approved by the Federal Railroad Administrator.

(c) A railroad may petition the Administrator to continue in service a car described in paragraph (a) of this section. Each petition shall be

(1) Be submitted not less than 90 days before the car is to be operated;

(2) Be submitted in triplicate; and

(3) State or describe the following:

(i) The name and principal business address of the petitioning railroad.

(ii) The name and address of the entity that controls the operation and maintenance of the car involved.

(iii) The number, type, capacity, reporting marks, and car numbers of the cars, their condition, status, and age measured from the date of original construction.

(iv) The design, type component, or other item that causes the car to be restricted.

(v) The maximum load the cars would carry.

(vi) The maximum speed at which the cars would be operated.

(vii) That each car has been examined and found to be safe to operate under the conditions set forth in the petition.

(viii) The territorial limits within which the cars are to be operated and the name of each railroad that will receive the cars in interchange.

Subpart D—Stenciling

§ 215.301 General.

The railroad or private car owner reporting mark, the car number, and built date shall be stenciled, or otherwise displayed, in clearly legible letters and numbers not less than seven inches high, except those of the built date which shall not be less than one inch high:

(a) On each side of each railroad freight car body; and

(b) In the case of a tank car, in any location that is visible to a person walking at track level beside the car.

§ 215.303 Stenciling of restricted cars.

(a) Each restricted railroad freight car that is described in § 215.205(a) of this part shall be stenciled, or marked—

(1) In clearly legible letters; and

(2) In accordance with paragraphs (b) and (c) of this section.

(b) The letter ''R'' shall be—

(1) Placed immediately below or to the right of the car number;

(2) The same color as the reporting mark; and

(3) The same size as the reporting mark.

(c) The following terms, to the extent needed to completely indicate the basis for the restricted operation of the car, shall be placed on the car following the symbol ''R'' in letters not less than one inch high:

(1) Age.

(2) Coupler.

(3) Draft.

(4) Bearings.

(5) Truck.

(6) Underframe.
(7) Wheels.
(8) Yoke.

§ 215.305 Stenciling of maintenance-of-way equipment.

(a) Maintenance-of-way equipment (including self-propelled maintenance-of-way equipment) described in § 215.3(c)(3) shall be stenciled, or marked—

(1) In clearly legible letters; and

(2) In accordance with paragraph (b) of this section.

(b) The letters ''MW'' must be—

(1) At least 2 inches high; and

(2) Placed on each side of the car.

[44 FR 77340, Dec. 31, 1979, as amended at 45 FR 26711, Apr. 21, 1980]

APPENDIX A TO PART 215—RAILROAD FREIGHT CAR COMPONENTS

List of components whose use is restricted by § 215.203 of this part.

A. Air brakes:
The ''K'' type.

B. Axles:
1. Former AAR alternate standard tubular type.
2. Axle with letters ''RJ'' stamped on the end of the journal.

C. Couplers:
1. AAR type ''D'', top or bottom operated.
2. AAR type ''E'' with 5″ by 7″ shank.

D. Draft arrangement:
1. Miner FR–16 and FR–19–F draft gears.
2. Farlow draft attachment.

E. Plain journal bearings:
Cartridge type.

F. Roller bearings:
1. Nippon Sieko Kabushiki Kaish (NSK) size 6½″ by 12″ (marked ''AAR 11'').
2. Hyatt cylindrical bearing, all sizes (marked ''AAR 2'').
3. SKF ''Piggybacker'' spherical roller, size 6″ by 11″ (marked ''AAR 7'').

G. Trucks:
1. Arch bar type.
2. Truck with cast steel pedestal side frame, short wheel base, and no bolster.

H. Truck bolsters:
1. A bolster with one of the following pattern numbers listed according to manufacturer:

A.S.F.	Dresser (Symington)	Birdsboro	Lenoir car works
21183–B	BO 5234	1458 1468	CS–184.
21183–N	BO 5263 BO 7076	1471	CS–611.
21648–C	BO 7076–A		
22056–E	BO 7115		

2. Bolster cast before 1927.
3. Bolster without an identification mark or pattern number.

I. 1. Truck side frames:
A side frame with one of the following pattern numbers listed according to manufacturer:

A.S.F.	National castings	Buckeye	Dominion
7273	33793–1B	3–1776	TF–5100
7323	.....	F–420	
21362 (cast prior to June 1941).			

Pittsburgh steel foundry	Scullin steel	Bettendorf	Canadian steel foundry
31673	42–CS–180	UT 456	26565
4–1862.			
3–1674	4665		
4–2045	4770		
12897	4942		
12921	5220		
21263	5364		
	5364–C		
	5364–E		
	5811–A		
	5869–B		
	6577–A		

2. Side frame cast before 1927.
3. Side frame without an identification mark or pattern number.
4. Side frame with an ''I'', ''T'', or ''L'' section compression or tension member.

J. Wheels:
1. Cast iron wheel.
2. Cast steel wheel marked ''AAR X–2.''
3. Southern cast steel wheel manufactured before May 7, 1958.
4. Griffin, three-riser cast steel wheel, ball rim design, 70-ton capacity.
5. Griffin, three-riser cast steel wheel, two-wear, 70- and 50-ton capacity, 33 inch, (marked X–5 or CS–2).
6. Wrought steel wheel manufactured before 1927, as indicated by marking on wheel.
7. Cast steel wheel marked AAR X–4.
8. Davis cast steel wheel.
9. One-wear, 70-ton Southern (ABEX) U1 cast steel wheels dated May 7, 1958 through December 31, 1969.

A. Wheels dated May 7, 1958, to January 1, 1964, are marked with the symbol ''70T'' cast on the back of the wheel plate; they are not marked ''U–1.''

B. Wheels dated January 1, 1964 through December 31, 1969, are marked with the symbols ''CJ–33'' and ''U–1'' *or* ''70T'' and ''U–1'' cast on the back of the wheel plate.

K. Yokes:
1. Riveted type.
2. Keyless type.
3. Vertical key type.

APPENDIX B TO PART 215—SCHEDULE OF CIVIL PENALTIES [1]

Section	Violation	Willful violation
Subpart A—General:		
215.9 Movement for repair:		
(a), (c)	(1)	(1)
(b)	$2,500	$5,000
215.11 Designation of qualified persons	2,500	5,000
215.13 Pre-departure inspection	2,000	4,000
Subpart B—Freight Car Components:		
215.103 Defective wheel:		
(a) Flange thickness of:		
(1) 7/8″ or less but more than 13/16″	2,500	5,000
(2) 13/16″ or less	5,000	7,500
(b) Flange height of:		
(1) 1½″ or greater but less than 1⅝″	2,500	5,000
(2) 1⅝″ or more	5,000	7,500
(c) Rim thickness of:		
(1) 11/16″ or less but more than ⅝″	2,500	5,000
(2) ⅝″ or less	5,000	7,500
(d) Wheel rim, flange plate hub width:		
(1) Crack of less than 1″	2,500	5,000
(2) Crack of 1″ or more	5,000	7,500
(3) Break	5,000	7,500
(e) Chip or gouge in flange of:		
(1) 1½″ or more but less than 1⅝″ in length; and ½″ or more but less than ⅝″ in width.	2,500	5,000
(2) 1⅝″ or more in length; or ⅝″ or more in width	5,000	7,500
(f) Slid flat or shelled spot(s):		
(1)(i) One spot more than 2½″, but less than 3″, in length	2,500	5,000
(ii) One spot 3″ or more in length	5,000	7,500
(2)(i) Two adjoining spots each of which is more than 2″ but less than 2½″ in length	2,500	5,000
(ii) Two adjoining spots both of which are at least 2″ in length, if either spot is 2½″, or more in length	5,000	7,500
(g) Loose on axle	6,000	8,500
(h) Overheated; discoloration extending:		
(1) more than 4″ but less than 4½″	2,500	5,000
(2) 4½″ or more	5,000	7,500
(i) Welded	5,000	7,500
215.105 Defective axle:		
(a)(1) Crack of 1″ or less.	2,500	5,000
(2) Crack of more than 1″	5,000	7,500
(3) Break	6,000	8,500
(b) Gouge in surface that is between the wheel seats and is more than ⅛″ in depth	2,500	5,000
(c) End collar with crack or break	2,500	5,000
(d) Journal overheated	5,000	7,500
(e) Journal surface has: a ridge; a depression; a circumferential score; corrugation; a scratch; a continuous streak; pitting; rust; or etching	2,500	5,000
215.107 Defective plain bearing box: general:		
(a)(1) No visible free oil	1,500	3,000
(2) Lubricating pad dry (no expression of oil observed when pad is compressed)	5,000	7,500
(b) Box lid is missing, broken, or open except to receive servicing	1,000	2,000
(c) Contains foreign matter that can be expected to damage the bearing or have a detrimental effect on the lubrication of the journal and bearing	2,500	5,000
215.109 Defective plain bearing box: journal lubrication system:		
(a) Lubricating pad has a tear	1,000	2,000
(b) Lubricating pad scorched, burned, or glazed	2,500	5,000
(c) Lubricating pad contains decaying or deteriorating fabric	2,500	5,000
(d) Lubricating pad has an exposed center core or metal parts contacting the journal	2,500	5,000
(e) Lubricating pad is missing or not in contact with the journal	5,000	7,500
215.111 Defective plain bearing:		
(a) Missing	5,000	7,500
(b) Bearing liner is loose or has piece broken out	2,500	5,000

Section	Violation	Willful violation
(c) Overheated	5,000	7,500
215.113 Defective plain bearing wedge:		
(a) Missing	5,000	7,500
(b) Cracked	2,500	5,000
(c) Broken	5,000	7,500
(d) Not located in its design position	5,000	7,500
215.115 Defective roller bearing:		
(a)(1) Overheated	5,000	7,500
(2) (i) Cap screw(s) loose	2,500	5,000
(ii) Cap screw lock broken, missing or improperly applied	1,000	2,000
(3) Seal is loose or damaged, or permits leakage of lubricant	2,500	5,000
(b)(1) Not inspected and tested after derailment	2,500	5,000
(2) Not disassembled after derailment	2,500	5,000
(3) Not repaired or replaced after derailment	5,000	7,500
215.117 Defective roller bearing adapter:		
(a) Cracked or broken	2,500	5,000
(b) Not in its design position	5,000	7,500
(c) Worn on the crown	2,500	5,000
215.119 Defective freight car truck:		
(a)(1) A side frame or bolster that is broken	5,000	7,500
(2)(i) Side frame or bolster with crack of: ¼″ or more, but less than 1″	2,500	5,000
(ii) 1″ or more	5,000	7,500
(b) A snubbing device that is ineffective or missing	2,500	5,000
(c) Side bearing(s):		
(1) Assembly missing or broken	5,000	7,500
(2) In contact except by design	5,000	7,500
(3), (4) Total clearance at one end or at diagonally opposite sides of:.		
(i) more than ¾″ but not more than 1″	2,500	5,000
(ii) more than 1″	5,000	7,500
(d) Truck spring(s):		
(1) Do not maintain travel or load	2,500	5,000
(2) Compressed solid	2,500	5,000
(3) Outer truck springs broken or missing:		
(i) Two outer springs	2,500	5,000
(ii) Three or more outer springs	5,000	7,500
(e) Truck bolster-center plate interference	5,000	7,500
(f) Brake beam shelf support worn	2,500	5,000
215.121 Defective car body:		
(a) Has less than 2½″ clearance from the top of rail	2,500	5,000
(b) Car center sill is:		
(1) Broken	6,000	8,500
(2) Cracked more than 6″	2,500	5,000
(3) Bent or buckled more than 2½″ in any 6′ length	2,500	5,000
(c) Coupler carrier that is broken or missing	2,500	5,000
(d) Car door not equipped with operative safety hangers	5,000	7,500
(e)(1) Center plate not properly secured	5,000	7,500
(2) Portion missing	2,500	5,000
(3) Broken	5,000	7,500
(4) Two or more cracks	2,500	5,000
(f) Broken sidesill, crossbearer, or body bolster	2,500	5,000
215.123 Defective couplers:		
(a) Shank bent out of alignment	1,000	2,000
(b) Crack in highly stressed junction area.	2,500	5,000
(c) Coupler knuckle broken or cracked	2,500	5,000
(d) Coupler knuckle pin or thrower that is missing or inoperative.	2,500	5,000
(e) Coupler retainer pin lock that is missing or broken	1,000	2,000
(f) Coupler with following conditions: locklift inoperative; no anticreep protection; or coupler lock is missing, inoperative, bent, cracked, or broken	2,500	5,000
215.125 Defective uncoupling device	2,500	5,000
215.127 Defective draft arrangement:		
(a) Draft gear that is inoperative	2,500	5,000
(b) Yoke that is broken	2,500	5,000
(c) End of car cushioning unit is leaking or inoperative	2,500	5,000
(d) Vertical coupler pin retainer plate missing or has missing fastner	5,000	7,500
(e) Draft key or draft key retainer that is inoperative or missing	5,000	7,500
(f) Follower plate that is missing or broken	2,500	5,000
215.129 Defective cushioning device	2,500	5,000
Subpart C—Restricted equipment:		
215.203 Restricted cars	2,500	5,000
Subpart D—Stencilling:		
215.301 General	1,000	2,000
215.303 Stencilling of restricted cars	1,000	2,000

Section	Violation	Willful violation
215.305 Stencilling of maintenance-of-way	1,000	2,000

[1] A penalty may be assessed against an individual only for a willful violation. Generally, when two or more violations of these regulations are discovered with respect to a single freight car that is placed or continued in service by a railroad, the appropriate penalties set forth above are aggregated up to a maximum of $16,000 per day. However, a failure to perform, with respect to a particular freight car, the predeparture inspection required by § 215.13 of this part will be treated as a violation separate and distinct from, and in addition to, any substantive violative conditions found on the car. The Administrator reserves the right to assess a penalty of up to $27,000 for any violation where circumstances warrant. See 49 CFR part 209, appendix A.

Failure to observe any condition for movement set forth in paragraphs (a) and (c) of § 215.9 will deprive the railroad of the benefit of the movement-for-repair provision and make the railroad and any responsible individuals liable for penalty under the particular regulatory section(s) concerning the substantive defect(s) present on the freight car at the time of movement.

Maintenance-of-way equipment not stenciled in accordance with § 215.305 is subject to all requirements of this part. See § 215.3(c)(3).

[53 FR 52925, Dec. 29, 1988, as amended at 63 FR 11620, Mar. 10, 1998; 69 FR 30593, May 28, 2004; 72 FR 51196, Sept. 6, 2007]

APPENDIX C TO PART 215—FRA FREIGHT CAR STANDARDS DEFECT CODE

The following defect code has been established for use by FRA and State inspectors to report defects observed during inspection of freight cars. The purpose of the code is to establish a uniform language among FRA, States, and the railroad industry that will facilitate communication, recordkeeping, and statistical analyses. The code may not be substituted for the description of defects on bad order tags affixed to cars being moved for repair under § 215.9. However, it may be used to supplement that description.

INDEX

General

215.009 Improper Movement of Defective Cars.
215.011 Designation of Qualified Persons.
215.013 Failure to Perform a Pre-departure Inspection.
215.015 Failure to Complete Initial Periodic Inspection as Required.

FREIGHT CAR COMPONENTS

Suspension System

215.103 Defective Wheel.
215.105 Defective Axle.
215.107 Defective Plain Bearing Box: General.
215.109 Defective Plain Bearing Box: Journal Lubrication System.
215.111 Defective Plain Bearing.
215.113 Defective Plain Bearing Wedge.
215.115 Defective Roller Bearing.
215.117 Defective Roller Bearing Adapter.
215.119 Defective Freight Car Truck.

Car Bodies

215.121 Defective Car Body.

Draft System

215.123 Defective Couplers.
215.125 Defective Uncoupling Device.
215.127 Defective Draft Arrangement.
215.129 Defective Cushioning Device.

Restricted Equipment

215.203 Restricted Cars.

Stenciling

215.301 Improper Stenciling.
215.303 Improper Stenciling of Restricted Cars.
215.305 Improper Stenciling of Maintenance-of-Way Equipment.

Description of Defects

215.009 Failure to meet conditions for movement of defective cars for repairs.
215.011 Designation of Qualified Persons.
(A)(1) Railroad fails to designate persons qualified to inspect freight cars;
(2) Persons designated does not have knowledge and ability to inspect freight cars for compliance with the requirements of this part.
(B) Railroad fails to maintain written record of:
(1) Each designation in effect;
(2) The basis for this designation.
215.013 Failure to perform pre-departure inspection.
215.015 Periodic Inspection.
(A) Railroad fails to perform the periodic inspection as required by June 30, 1980 on:
(1) High utilization car built prior to December 31, 1977;
(2) Non-high utilization car built prior to December 31, 1971;
(B) A freight car improperly stenciled for periodic inspection.
215.103 Defective Wheel.
(A)(1) Flanges ⅞″ or less at ⅜″ above the tread;
(2) Flanges 13⁄16″ or less at ⅜″ above the tread;
(3) Flanges ¾″ or less at ⅜″ above the tread;
(B)(1) Flange is 1½″ or more from the tread to top of flange;

(2) Flange is 1⅝″ or more from the tread to top of flange;
(3) Flange is 1¾″.
(C)(1) Rim thickness is 11/16″ or less;
(2) Rim thickness is ⅝″ or less;
(3) Rim thickness is 9/16″ or less;
(D) Wheel cracked or broken in: (1) rim, (2) flange, (3) plate or (4) hub area.
(E) Wheel chip or gouge in flange:
(1) 1½″ length and ½″ in width or more;
(2) 1⅝″ length and ⅝″ in width or more;
(3) 1¾″ in length and ¾″ in width or more.
(F) Wheel has slid flat spot or shelled spot:
(1) 2½″ in length or more;
(2) Has two adjoining flat spots each of which is 2″ in length or greater;
(3) A single flat spot 3″ in length or more;
(4) Has two adjoining flat spots one of which is at least 2″ in length and the other is 2½″ or greater.
(G) Has a loose wheel.
(H) Overheated with discoloration extending: (1) More than 4″; (2) 4½″ or more.
(I) A welded wheel on car that is not moving for repairs.

215.105 Defective Axle.
(A) Cracked or broken:
(1) Cracked 1′ or less;
(2) Cracked greater than 1″;
(3) Broken or cracked with visible separation of metal.
(B) Gouge between wheel seats more than ⅛″ in depth:
(C) Broken or cracked end collar on plain bearing axle.
(D) Overheated journal.
(E) Surface of plain bearing journal or fillet has (1) ridge, (2) depression, (3) circumferential score, (4) corrugation, (5) scratch, (6) continuous streak, (7) pitting, (8) rust, (9) etching.

215.107 Defective plain bearing box.
(A) (1) Does not contain visible free oil;
(2) A journal box with dry pad.
(B) Lid is missing, broken or open except to receive service.
(C) Box has foreign matter that will damage bearing or prevent lubrication.

215.109 Defective plain bearing box: journal lubrication system.
(A) Pad torn half the length or width.
(B) Scorched, burned or glazed.
(C) Contains decaying or deteriorated fabric.
(D) Has exposed core except by design of metal parts in contact with journal.
(E)(1) Missing;
(2) Not in contact with journal.

215.111 Defective plain bearing.
(A) Missing, cracked or broken.
(B)(1) Bearing lining is loose;
(2) Broken out piece.
(C) Overheated as evidenced by:
(1) Melted babbit;
(2) Smoke from hot oil;
(3) Journal surface damaged.

215.113 Defective plain bearing wedge.
(A) Missing.
(B) Cracked.
(C) Broken.
(D) Not located in design position.

215.115 Defective roller bearing.
(A)(1) Overheated;
(2) Loose or missing cap screw;
(3) Roller bearing seal loose or damaged permitting loss of lubricant;
(4) Two or more missing cap screws.
(B)(1) Failure to inspect if involved in derailment;
(2) Failure to disassemble if required under this part;
(3) Failure to repair or replace defective roller bearings.

215.117 Defective roller bearing adapter.
(A) Cracked or broken.
(B) Not in design position.
(C) Worn excessively as shown on Figure 1 in relief portion.

215.119 Defective freight car trucks.
(A)(1) Side frame or bolster broken;
(2) Cracked ¼″ or more in transverse direction on tension member;
(3) Cracked 1″ or more in transverse direction on tension member.
(B) Has ineffective snubbing devices.
(C)(1) Missing or broken side bearing;
(2) Side bearing in contact except by design;
(3) Excessive side bearing clearance at one end of car;
(4) Excessive side bearing clearance on opposite sides at diagonal ends of car.
(D)(1) Has truck springs that will not maintain travel or load;
(2) Truck springs that are compressed solid;
(3) Has two springs broken in a cluster;
(4) Has three or more springs broken.
(E) Truck bolster and center plate interference preventing rotation.
(F) Has broken beam shelf supports worn so that shelf will not support beam.

215.121 Defective car body.
(A) Improper clearance—less than 2½″ from top of rail.
(B) Center sill is:
(1) Broken;
(2) Cracked more than 6″;
(3) Bent or buckled more than 2½″ in any 6-foot length.
(C) Coupler carrier is:
(1) Broken;
(2) Missing;
(3) Non-resilient when used with coupler with F head.
(D) Car door not equipped with operative safety hangers.
(E) If center plate:
(1) Any portion missing;
(2) Broken or cracked as defined in this part.
(F) Broken side sills, crossbars or body bolster.

215.123 Defective couplers.

(A) Coupler shank bent.
(B) Coupler cracked in highly stressed area of head and shank.
(C) Coupler knuckle broken.
(D) Coupler knuckle pin or knuckle throw:
(1) Missing;
(2) Inoperative.
(E) Coupler retainer pin lock:
(1) Missing;
(2) Broken.
(F)(1) Coupler locklift is inoperative;
(2) No anti-creep protection;
(3) Coupler lock is (i) missing, (ii) inoperative, (iii) bent, (iv) cracked or (v) broken.

215.125 Defective uncoupling device.
(A) Fouling on curve.
(B) Unintentional uncoupling.

215.127 Defective draft arrangement.
(A) Draft gear inoperative.
(B) Broken yoke.
(C) End of car cushioning unit:
(1) Leaking;
(2) Inoperative.
(D) Vertical coupler pin retainer plate:
(1) Missing;
(2) Has missing fastener.
(E) Draft key or key retainer:
(1) Inoperative;
(2) Missing.
(F) Follower plate missing or broken.

215.129 Defective cushioning device unless effectively immobilized.
(A) Broken.
(B) Inoperative.
(C) Missing parts.

215.203 Operating a restricted car, except under conditions approved by FRA.

Stenciling

215.301 Failure to stencil car number and built date on freight car as required.

215.303 Failure to stencil restricted car as required.

215.305 Failure to stencil maintenance-of-way equipment as required.

APPENDIX D TO PART 215—PRE-DEPARTURE INSPECTION PROCEDURE

At each location where a freight car is placed in a train and a person designated under §215.11 is not on duty for the purpose of inspecting freight cars, the freight car shall, as a minimum, be inspected for the imminently hazardous conditions listed below that are likely to cause an accident or casualty before the train arrives at its destination. These conditions are readily discoverable by a train crew member in the course of a customary inspection.

1. Car body:
(a) Leaning or listing to side.
(b) Sagging downward.
(c) Positioned improperly on truck.
(d) Object dragging below.
(e) Object extending from side.
(f) Door insecurely attached.
(g) Broken or missing safety appliance.
(h) Lading leaking from a placarded hazardous material car.

2. Insecure coupling.
3. Overheated wheel or journal.
4. Broken or extensively cracked wheel.
5. Brake that fails to release.
6. Any other apparent safety hazard likely to cause an accident or casualty before the train arrives at its destination.

[45 FR 26711, Apr. 21, 1980]

PART 216—SPECIAL NOTICE AND EMERGENCY ORDER PROCEDURES: RAILROAD TRACK, LOCOMOTIVE AND EQUIPMENT

Subpart A—General

Sec.
216.1 Application.
216.3 Definitions.
216.5 Delegation and general provisions.
216.7 Penalties.

Subpart B—Special Notice for Repairs

216.11 Special notice for repairs—railroad freight car.
216.13 Special notice for repairs—locomotive.
216.14 Special notice for repairs—passenger equipment.
216.15 Special notice for repairs—track class.
216.17 Appeals.

Subpart C—Emergency Order—Track

216.21 Notice of track conditions.
216.23 Consideration of recommendation.
216.25 Issuance and review of emergency order.
216.27 Reservation of authority and discretion.

AUTHORITY: 49 U.S.C. 20102–20104, 20107, 20111, 20133, 20701–20702, 21301–21302, 21304; 28 U.S.C. 2461, note; and 49 CFR 1.49.

SOURCE: 41 FR 18657, May 6, 1976, unless otherwise noted.

Subpart A—General

§216.1 Application.

(a) This part applies, according to its terms, to each railroad that uses or operates—

(1) A railroad freight car subject to part 215 of this chapter;

(2) A locomotive subject to 49 U.S.C. chapter 207 (49 U.S.C. 20701–03); or

(3) Railroad passenger equipment subject to part 238 of this chapter.

(b) This part applies, according to its terms, to each railroad owning track subject to part 213 of this chapter.

[41 FR 18657, May 6, 1976, as amended at 64 FR 25659, May 12, 1999]

§ 216.3 Definitions.

As used in this part—

(a) *FRA* means the Federal Railroad Administration.

(b) *State* means a State participating in investigative and surveillance activities under 49 U.S.C. 20105.

(c) *Inspector* includes FRA Regional Supervisors of Inspectors.

[41 FR 18657, May 6, 1976, as amended at 64 FR 25659, May 12, 1999]

§ 216.5 Delegation and general provisions.

(a) The Administrator has delegated to the appropriate FRA and State personnel the authority to implement this part.

(b) Communications to the Administrator relating to the operation of this part should be submitted in triplicate to the Docket Clerk, Office of Chief Counsel, Federal Railroad Administration, Washington, DC 20590.

(c) The notices prescribed in §§ 216.11, 216.13, 216.14, 216.15, and 216.21 of this part are issued on standard FRA forms indicating the particular subject matter. An inspector issues a notice by delivering it to an appropriate officer or agent immediately responsible for the affected locomotive, car, or track.

[41 FR 18657, May 6, 1976, as amended at 41 FR 43153, Sept. 30, 1976; 64 FR 25659, May 12, 1999]

§ 216.7 Penalties.

Any person (an entity of any type covered under 1 U.S.C. 1, including but not limited to the following: a railroad; a manager, supervisor, official, or other employee or agent of a railroad; any owner, manufacturer, lessor, or lessee of railroad equipment, track, or facilities; any independent contractor providing goods or services to a railroad; and any employee of such owner, manufacturer, lessor, lessee, or independent contractor) who violates any requirement of this part or causes the violation of any such requirement is subject to a civil penalty of at least $550 and not more than $16,000 per violation, except that: Penalties may be assessed against individuals only for willful violations, and, where a grossly negligent violation or a pattern of repeated violations has created an imminent hazard of death or injury to persons, or has caused death or injury, a penalty not to exceed $27,000 per violation may be assessed. Each day a violation continues shall constitute a separate offense. See 49 CFR part 209, appendix A.

[53 FR 28599, July 28, 1988, as amended at 63 FR 11620, Mar. 10, 1998; 69 FR 30593, May 28, 2004; 72 FR 51196, Sept. 6, 2007]

Subpart B—Special Notice for Repairs

EDITORIAL NOTE: Nomenclature changes to subpart B of part 216 appear at 64 FR 25659, May 12, 1999.

§ 216.11 Special notice for repairs—railroad freight car.

(a) When an FRA Motive Power and Equipment Inspector or a State Equipment Inspector determines that a railroad freight car is not in conformity with the requirements of the FRA Freight Car Safety Standards set forth in part 215 of this chapter and that it is unsafe for further service, he notifies the railroad in writing that the car is not in serviceable condition. The Special Notice sets out and describes the defects that cause the car to be in unserviceable condition. After receipt of the Special Notice, the railroad shall remove the car from service until it is restored to serviceable condition. The car may not be deemed to be in serviceable condition until it complies with all applicable requirements of part 215 of this chapter.

(b) The railroad shall notify the FRA Regional Administrator in writing when the equipment is returned to service, specifying the repairs completed.

(c) A railroad freight car subject to the notice prescribed in paragraph (a) of this section may be moved from the place where it was found to be unsafe

for further service to the nearest available point where the car can be repaired, if such movement is necessary to make such repairs. However, the movement is subject to the further restrictions of § 215.9 of this chapter.

[41 FR 18657, May 6, 1976, as amended at 41 FR 43153, Sept. 30, 1976]

§ 216.13 Special notice for repairs—locomotive.

(a) When an FRA Motive Power and Equipment Inspector or State Equipment Inspector determines a locomotive is not safe to operate in the service to which it is put, whether by reason of nonconformity with the FRA Railroad Locomotive Safety Standards set forth in part 229 of this chapter or the FRA Railroad Locomotive Inspection Regulations set forth in part 230 of this chapter or by reason of any other condition rendering the locomotive unsafe, he or she will notify the railroad in writing that the locomotive is not in serviceable condition. After receipt of the Special Notice, the railroad shall remove the locomotive from service until it is restored to serviceable condition. The locomotive may not be deemed to be in serviceable condition until it complies with all applicable requirements of parts 229 and 230 of this chapter and until all additional deficiencies identified in the Special Notice have been corrected.

(b) The carrier shall notify the FRA Regional Administrator in writing when the locomotive is returned to service, specifying the repairs completed. The carrier officer or employee directly responsible for the repairs shall subscribe this writing under oath.

[41 FR 18657, May 6, 1976, as amended at 64 FR 25659, May 12, 1999]

§ 216.14 Special notice for repairs—passenger equipment.

(a) When an FRA Motive Power and Equipment Inspector or a State Equipment Inspector determines that railroad passenger equipment is not in conformity with one or more of the requirements of the FRA Passenger Equipment Safety Standards set forth in part 238 of this chapter and that it is unsafe for further service, he or she will issue a written Special Notice to the railroad that the equipment is not in serviceable condition. The Special Notice describes the defect or defects that cause the equipment to be in unserviceable condition. After receipt of the Special Notice, the railroad shall remove the equipment from service until it is restored to serviceable condition. The equipment may not be deemed in serviceable condition until it complies with all applicable requirements of part 238 of this chapter.

(b) The railroad shall notify in writing the FRA Regional Administrator for the FRA region in which the Special Notice was issued when the equipment is returned to service, specifying the repairs completed.

(c) Railroad passenger equipment subject to a Special Notice may be moved from the place where it was found to be unsafe for further service to the nearest available point where the equipment can be repaired, if such movement is necessary to make the repairs. However, the movement is subject to the further restrictions of §§ 238.15 and 238.17 of this chapter.

[64 FR 25659, May 12, 1999]

§ 216.15 Special notice for repairs—track class.

(a) When an FRA Track Inspector or State Track Inspector determines that track does not comply with the requirements for the class at which the track is being operated, as defined in the Track Safety Standards (49 CFR part 213), he notifies the railroad in writing that the track is being lowered in class and that operations over that track must comply with the speed limitations prescribed in part 213 of this chapter. The notice describes the conditions requiring the track to be lowered in class, specifies the exact location of the affected track segment, and states the highest class and corresponding maximum speeds at which trains may be operated over that track. After receipt of such notice, the speeds at which trains operate over that track shall not exceed the stated maximum permissible speeds, until such time as the track conforms to applicable standards for a higher class.

(b) The railroad shall notify the FRA Regional Administrator in writing when the track is restored to a condition permitting operations at speeds

authorized for a higher class, specifying the repairs completed.

[41 FR 43153, Sept. 30, 1976]

§ 216.17 Appeals.

(a) Upon receipt of a Special Notice prescribed in §§ 216.11, 216.13, 216.14, or 216.15, a railroad may appeal the decision of the Inspector to the FRA Regional Administrator for the region in which the notice was given. The appeal shall be made by letter or telegram. The FRA Regional Administrator assigns an inspector, other than the inspector from whose decision the appeal is being taken, to reinspect the railroad freight car, locomotive, railroad passenger equipment, or track. The reinspection will be made immediately. If upon reinspection, the railroad freight car, locomotive, or passenger equipment is found to be in serviceable condition, or the track is found to comply with the requirements for the class at which it was previously operated by the railroad, the FRA Regional Administrator or his or her agent will immediately notify the railroad, whereupon the restrictions of the Special Notice cease to be effective. If on reinspection the decision of the original inspector is sustained, the FRA Regional Administrator notifies the railroad that the appeal has been denied.

(b) A railroad whose appeal to the FRA Regional Administrator has been denied may, within thirty (30) days from the denial, appeal to the Administrator. After affording an opportunity for informal oral hearing, the Administrator may affirm, set aside, or modify, in whole or in part, the action of the FRA Regional Administrator.

(c) The requirements of a Special Notice issued under this subpart shall remain in effect and be observed by a railroad pending appeal to the FRA Regional Administrator or to the Administrator.

[67 FR 19989, Apr. 23, 2002]

Subpart C—Emergency Order—Track

§ 216.21 Notice of track conditions.

(a) When an FRA Track Inspector or State Track Inspector finds track conditions which may require the issuance of an Emergency order removing the track from service under section 203, Public Law No. 91–458, 84 Stat. 972 (45 U.S.C. 432), the Inspector may issue a notice to the railroad owning the track. The notice sets out and describes the conditions found by the Inspector and specifies the location of defects on the affected track segment. The Inspector provides a copy to the FRA Regional Track Engineer and the FRA Regional Administrator.

(b) In the event the railroad immediately commences repairs on the affected track and so advises the FRA Regional Track Engineer, the Regional Track Engineer assigns an Inspector to reinspect the track immediately on the completion of repairs. If upon reinspection the Inspector determines that necessary repairs have been completed, he withdraws the Notice of Track Conditions.

§ 216.23 Consideration of recommendation.

Upon receipt of a Notice of Track Conditions issued under § 216.21, the FRA Regional Administrator prepares a recommendation to the Administrator concerning the issuance of an Emergency order removing the affected track from service. In preparing this recommendation, the FRA Regional Administrator considers all written or other material bearing on the condition of the track received from the railroad within three (3) calendar days of the issuance of the Notice of Track Conditions and also considers the report of the FRA Regional Track Engineer.

[67 FR 19989, Apr. 23, 2002]

§ 216.25 Issuance and review of emergency order.

(a) Upon recommendation of the FRA Regional Administrator, the Administrator may issue an Emergency order removing from service track identified in the notice issued under § 216.21.

(b) As specified in section 203, Public Law No. 91–458, 84 Stat. 972 (45 U.S.C. 432), opportunity for review of the Emergency order is provided in accordance with section 554 of title 5 of the U.S.C. Petitions for such review must be submitted in writing to the Office of

Chief Counsel, Federal Railroad Administration, Washington, DC 20590. Upon receipt of a petition, FRA will immediately contact the petitioner and make the necessary arrangements for a conference to be held at the earliest date acceptable to the petitioner. At this conference, the petitioner will be afforded an opportunity to submit facts, arguments and proposals for modification or withdrawal of the Emergency order. If the controversy is not resolved at this conference and a hearing is desired, the petitioner must submit a written request for a hearing within fifteen (15) days after the conference. The hearing will commence within fourteen (14) calendar days of receipt of the request and will be conducted in accordance with sections 556 and 575, title 5, U.S.C.

(c) Unless stayed or modified by the Administrator, the requirements of each Emergency order issued under this subpart shall remain in effect and be observed pending decision on a petition for review.

§ 216.27 Reservation of authority and discretion.

The FRA may issue Emergency orders concerning track without regard to the procedures prescribed in this subpart whenever the Administrator determines that immediate action is required to assure the public safety.

PART 217—RAILROAD OPERATING RULES

Subpart A—General

Sec.

217.1 Purpose.
217.2 Preemptive effect.
217.3 Application.
217.4 Definitions.
217.5 Penalty.
217.7 Operating rules; filing and recordkeeping.
217.9 Program of operational tests and inspections; recordkeeping.
217.11 Program of instruction on operating rules; recordkeeping; electronic recordkeeping.
217.13 Information collection.
APPENDIX A TO PART 217—SCHEDULE OF CIVIL PENALTIES

AUTHORITY: 49 U.S.C. 20103, 20107; 28 U.S.C. 2461, note; and 49 CFR 1.49.

SOURCE: 39 FR 41176, Nov. 25, 1974, unless otherwise noted.

Subpart A—General

§ 217.1 Purpose.

Through the requirements of this part, the Federal Railroad Administration learns the condition of operating rules and practices with respect to trains and other rolling equipment in the railroad industry, and each railroad is required to instruct its employees in operating practices.

§ 217.2 Preemptive effect.

Normal State negligence standards apply where there is no Federal action covering the subject matter. Under 49 U.S.C. 20106 (section 20106), issuance of the regulations in this part preempts any State law, regulation, or order covering the same subject matter, except an additional or more stringent law, regulation, or order that is necessary to eliminate or reduce an essentially local railroad safety or railroad security hazard; that is not incompatible with a law, regulation, or order of the United States Government; and that does not unreasonably burden interstate commerce. Section 20106 permits State tort actions arising from events or activities occurring on or after January 18, 2002, for the following: violation of the Federal standard of care established by regulation or order issued by the Secretary of Transportation (with respect to railroad safety, such as these regulations) or the Secretary of Homeland Security (with respect to railroad security); a party's violation of, or failure to comply with, its own plan, rule, or standard that it created pursuant to a regulation or order issued by either of the two Secretaries; and a party's violation of a State standard that is necessary to eliminate or reduce an essentially local safety or security hazard, is not incompatible with a law, regulation, or order of the United States Government, and does not unreasonably burden interstate commerce. Nothing in section 20106 creates a Federal cause of action on behalf of an injured party or confers Federal question jurisdiction for such State law causes of action.

[73 FR 8495, Feb. 13, 2008]

§217.3 Application.

(a) Except as provided in paragraph (b) of this section, this part applies to railroads that operate trains or other rolling equipment on standard gage track which is part of the general railroad system of transportation.

(b) This part does not apply to—

(1) A railroad that operates only on track inside an installation which is not part of the general railroad system of transportation; or

(2) Rapid transit operations in an urban area that are not connected with the general railroad system of transportation.

[40 FR 2690, Jan. 15, 1975, as amended at 54 FR 33229, Aug. 14, 1989]

§217.4 Definitions.

As used in this part—

Associate Administrator for Safety means the Associate Administrator for Safety of the Federal Railroad Administration or that person's delegate as designated in writing.

Class I, *Class II*, and *Class III* have the meaning assigned by regulations of the Interstate Commerce Commission (49 CFR part 1201; General Instructions 1–1), as those regulations may be revised and applied by order of the Commission (including modifications in class thresholds based revenue deflator adjustments).

Division headquarters means the location designated by the railroad where a high-level operating manager (*e.g.*, a superintendent, division manager, or equivalent), who has jurisdiction over a portion of the railroad, has an office.

FRA means the Federal Railroad Administration.

Qualified means that a person has successfully completed all instruction, training, and examination programs required by the railroad and this part and that the person, therefore, has actual knowledge or may reasonably be expected to have knowledge of the subject on which the person is expected to be competent.

System headquarters means the location designated by the railroad as the general office for the railroad system.

[59 FR 43070, Aug. 22, 1994, as amended at 73 FR 8496, Feb. 13, 2008]

§217.5 Penalty.

Any person (an entity of any type covered under 1 U.S.C. 1, including but not limited to the following: a railroad; a manager, supervisor, official, or other employee or agent of a railroad; any owner, manufacturer, lessor, or lessee of railroad equipment, track, or facilities; any independent contractor providing goods or services to a railroad; and any employee of such owner, manufacturer, lessor, lessee, or independent contractor) who violates any requirement of this part or causes the violation of any such requirement is subject to a civil penalty of at least $550 and not more than $16,000 per violation, except that: Penalties may be assessed against individuals only for willful violations, and, where a grossly negligent violation or a pattern of repeated violations has created an imminent hazard of death or injury to persons, or has caused death or injury, a penalty not to exceed $27,000 per violation may be assessed. Each day a violation continues shall constitute a separate offense. See appendix A to this part for a statement of agency civil penalty policy.

[53 FR 28599, July 28, 1988, as amended at 53 FR 52927, Dec. 29, 1988; 63 FR 11620, Mar. 10, 1998; 69 FR 30593, May 28, 2004; 72 FR 51196, Sept. 6, 2007]

§217.7 Operating rules; filing and recordkeeping.

(a) On or before December 21, 1994, each Class I railroad, Class II railroad, the National Railroad Passenger Corporation, and each railroad providing commuter service in a metropolitan or suburban area that is in operation on November 21, 1994, shall file with the Federal Railroad Administrator, Washington, DC 20590, one copy of its code of operating rules, timetables, and timetable special instructions which were in effect on November 21, 1994. Each Class I railroad, each Class II railroad, and each railroad providing commuter service in a metropolitan or suburban area that commences operations after November 21, 1994, shall file with the Administrator one copy of its code of operating rules, timetables, and timetable special instructions before it commences operations.

(b) After November 21, 1994, each Class I railroad, each Class II railroad, the National Railroad Passenger Corporation, and each railroad providing commuter service in a metropolitan or suburban area shall file each new amendment to its code of operating rules, each new timetable, and each new timetable special instruction with the Federal Railroad Administrator within 30 days after it is issued.

(c) On or after November 21, 1994, each Class III railroad and any other railroad subject to this part but not subject to paragraphs (a) and (b) of this section shall keep one copy of its current code of operating rules, timetables, and timetable special instructions and one copy of each subsequent amendment to its code of operating rules, each new timetable, and each new timetable special instruction, at its system headquarters, and shall make such records available to representatives of the Federal Railroad Administration for inspection and copying during normal business hours.

[59 FR 43070, Aug. 22, 1994]

§ 217.9 Program of operational tests and inspections; recordkeeping.

(a) *Requirement to conduct operational tests and inspections.* Each railroad to which this part applies shall periodically conduct operational tests and inspections to determine the extent of compliance with its code of operating rules, timetables, and timetable special instructions, specifically including tests and inspections sufficient to verify compliance with the requirements of subpart F of part 218 of this chapter, in accordance with a written program as required by paragraph (c) of this section.

(b) *Railroad and railroad testing officer responsibilities.* The requirements of this paragraph (b) are applicable beginning January 1, 2009.

(1) Each railroad officer who conducts operational tests and inspections (railroad testing officer) shall:

(i) Be qualified on the railroad's operating rules in accordance with § 217.11 of this part;

(ii) Be qualified on the operational testing and inspection program requirements and procedures relevant to the testing and inspections the officer will conduct;

(iii) Receive appropriate field training, as necessary to achieve proficiency, on each operational test or inspection that the officer is authorized to conduct; and

(iv) Conduct operational tests and inspections in accordance with the railroad's program of operational tests and inspections.

(2) Written records documenting qualification of each railroad testing officer shall be retained at the railroad's system headquarters and at the division headquarters for each division where the officer is assigned and shall be made available to representatives of the FRA for inspection and copying during normal business hours.

(c) *Written program of operational tests and inspections.* Every railroad shall have a written program of operational tests and inspections in effect. New railroads shall have such a program within 30 days of commencing rail operations. The program shall—

(1) Provide for operational testing and inspection under the various operating conditions on the railroad. As of January 1, 2009, the program shall address with particular emphasis those operating rules that cause or are likely to cause the most accidents or incidents, such as those accidents or incidents identified in the quarterly reviews, six month reviews, and the annual summaries as required under paragraphs (e) and (f) of this section, as applicable;

(2) Require a minimum number of tests and inspections per year covering the requirements of part 218, subpart F of this chapter;

(3) Describe each type of operational test and inspection required, including the means and procedures used to carry it out;

(4) State the purpose of each type of operational test and inspection;

(5) State, according to operating divisions where applicable, the frequency with which each type of operational test and inspection is to be conducted;

(6) As of January 1, 2009, identify the officer(s) by name, job title, and, division or system, who shall be responsible for ensuring that the program of operational tests and inspections is

properly implemented. The responsibilities of such officer(s) shall include, but not be limited to, ensuring that the railroad's testing officers are directing their efforts in an appropriate manner to reduce accidents/incidents and that all required reviews and summaries are completed. A railroad with divisions shall identify at least one officer at the system headquarters who is responsible for overseeing the entire program and the implementation by each division.

(7) Include a schedule for making the program fully operative within 210 days after it begins.

(d) *Records*. (1) Each railroad to which this part applies shall keep a record of the date, time, place, and result of each operational test and inspection that was performed in accordance with its program. Each record shall specify the officer administering the test and inspection and each employee tested. These records shall be retained at the system headquarters and at each division headquarters where the tests and inspections are conducted for one calendar year after the end of the calendar year to which they relate. These records shall be made available to representatives of the FRA for inspection and copying during normal business hours.

(2) Each railroad shall retain one copy of its current program for periodic performance of the operational tests and inspections required by paragraph (a) of this section and one copy of each subsequent amendment to such program. These records shall be retained at the system headquarters and at each division headquarters where the tests and inspections are conducted for three calendar years after the end of the calendar year to which they relate. These records shall be made available to representatives of the FRA for inspection and copying during normal business hours.

(e) *Reviews of tests and inspections and adjustments to the program of operational tests*. This paragraph (e) shall apply to each Class I railroad and the National Railroad Passenger Corporation beginning April 1, 2009 and to all other railroads subject to this paragraph beginning July 1, 2009.

(1) *Reviews by railroads other than passenger railroads*. Each railroad to which this part applies shall conduct periodic reviews and analyses as provided in this paragraph and shall retain, at each division headquarters, where applicable, and at its system headquarters, one copy of the following written reviews, provided however that this requirement does not apply to either a railroad with less than 400,000 total employee work hours annually or a passenger railroad subject to paragraph (e)(2) of this section.

(i) *Quarterly review*. The designated officer of each division headquarters, or system headquarters, if no division headquarters exists, shall conduct a written quarterly review of the accident/incident data, the results of prior operational tests and inspections, and other pertinent safety data for that division or system to identify the relevant operating rules related to those accidents/incidents that occurred during the quarter. The review shall also include the name of each railroad testing officer, the number of tests and inspections conducted by each officer, and whether the officer conducted the minimum number of each type of test or inspection required by the railroad's program. Based upon the results of that review, the designated officer shall make any necessary adjustments to the tests and inspections required of railroad officers for the subsequent period(s). Quarterly reviews and adjustments shall be completed no later than 30 days after the quarter has ended.

(ii) *Six month review*. The designated officer of each system headquarters office responsible for development and administration of the program of operational tests and inspections shall conduct a review of the program of operational tests and inspections on a six month basis to ensure that it is being utilized as intended, that the quarterly reviews provided for in this paragraph have been properly completed, that appropriate adjustments have been made to the distribution of tests and inspections required, and that the railroad testing officers are appropriately directing their efforts. Six month reviews shall be completed no later than 60 days after the review period has ended.

(2) *Reviews by passenger railroads*. Not less than once every six months, the

designated officer(s) of the National Railroad Passenger Corporation and of each railroad providing commuter service in a metropolitan or suburban area shall conduct periodic reviews and analyses as provided in this paragraph and shall retain, at each division headquarters, where applicable, and at its system headquarters, one copy of the reviews. Each such review shall be completed within 30 days of the close of the period. The designated officer(s) shall conduct a written review of:

(i) The operational testing and inspection data for each division, if any, or the system to determine compliance by the railroad testing officers with its program of operational tests and inspections required by paragraph (c) of this section. At a minimum, this review shall include the name of each railroad testing officer, the number of tests and inspections conducted by each officer, and whether the officer conducted the minimum number of each type of test or inspection required by the railroad's program;

(ii) Accident/incident data, the results of prior operational tests and inspections, and other pertinent safety data for each division, if any, or the system to identify the relevant operating rules related to those accidents/incidents that occurred during the period. Based upon the results of that review, the designated officer(s) shall make any necessary adjustments to the tests and inspections required of railroad officers for the subsequent period(s); and

(iii) Implementation of the program of operational tests and inspections from a system perspective, to ensure that it is being utilized as intended, that the other reviews provided for in this paragraph have been properly completed, that appropriate adjustments have been made to the distribution of tests and inspections required, and that the railroad testing officers are appropriately directing their efforts.

(3) *Records retention.* The records of periodic reviews required in paragraphs (e)(1) and (e)(2) of this section shall be retained for a period of one year after the end of the calendar year to which they relate and shall be made available to representatives of FRA for inspection and copying during normal business hours.

(f) *Annual summary of operational tests and inspections.* Before March 1 of each calendar year, each railroad to which this part applies, except for a railroad with less than 400,000 total employee work hours annually, shall retain, at each of its division headquarters and at the system headquarters of the railroad, one copy of a written summary of the following with respect to its previous calendar year activities: The number, type, and result of each operational test and inspection, stated according to operating divisions where applicable, that was conducted as required by paragraphs (a) and (c) of this section. These records shall be retained for three calendar years after the end of the calendar year to which they relate and shall be made available to representatives of the FRA for inspection and copying during normal business hours.

(g) *Electronic recordkeeping.* Each railroad to which this part applies is authorized to retain by electronic recordkeeping the information prescribed in this section, provided that all of the following conditions are met:

(1) The railroad adequately limits and controls accessibility to such information retained in its electronic database system and identifies those individuals who have such access;

(2) The railroad has a terminal at the system headquarters and at each division headquarters;

(3) Each such terminal has a computer (i.e., monitor, central processing unit, and keyboard) and either a facsimile machine or a printer connected to the computer to retrieve and produce information in a usable format for immediate review by FRA representatives;

(4) The railroad has a designated representative who is authorized to authenticate retrieved information from the electronic system as true and accurate copies of the electronically kept records; and

(5) The railroad provides representatives of the FRA with immediate access to these records for inspection and copying during normal business hours and provides printouts of such records upon request.

(h) Upon review of the program of operational tests and inspections required by this section, the Associate Administrator for Safety may, for cause stated, disapprove the program. Notification of such disapproval shall be made in writing and specify the basis for the disapproval decision. If the Associate Administrator for Safety disapproves the program,

(1) The railroad has 35 days from the date of the written notification of such disapproval to:

(i) Amend its program and submit it to the Associate Administrator for Safety for approval; or

(ii) Provide a written response in support of the program to the Associate Administrator for Safety, who informs the railroad of FRA's final decision in writing; and

(2) A failure to submit the program with the necessary revisions to the Associate Administrator for Safety in accordance with this paragraph will be considered a failure to implement a program under this part.

[73 FR 8496, Feb. 13, 2008, as amended at 73 FR 33902, June 16, 2008]

§ 217.11 Program of instruction on operating rules; recordkeeping; electronic recordkeeping.

(a) To ensure that each railroad employee whose activities are governed by the railroad's operating rules understands those rules, each railroad to which this part applies shall periodically instruct each such employee on the meaning and application of the railroad's operating rules in accordance with a written program retained at its system headquarters and at the division headquarters for each division where the employee is instructed.

(b) On or after November 21, 1994, or 30 days before commencing operations, whichever is later, each railroad to which this part applies shall retain one copy of its current program for the periodic instruction of its employees as required by paragraph (a) of this section and one copy of each subsequent amendment to that program. The system headquarters of the railroad shall retain one copy of all these records; the division headquarters for each division where the employees are instructed shall retain one copy of all portions of these records that the division applies and enforces. These records shall be made available to representatives of the Federal Railroad Administration for inspection and copying during normal business hours. This program shall—

(1) Describe the means and procedures used for instruction of the various classes of affected employees;

(2) State the frequency of instruction and the basis for determining that frequency;

(3) Include a schedule for completing the initial instruction of employees who are already employed when the program begins;

(4) Begin within 30 days after November 21, 1994, or the date of commencing operations, whichever is later; and

(5) Provide for initial instruction of each employee hired after the program begins.

(c) Each railroad to which this part applies is authorized to retain by electronic recordkeeping its program for periodic instruction of its employees on operating rules provided that the requirements stated in § 217.9(g)(1) through (5) of this part are satisfied.

[39 FR 41176, Nov. 25, 1974, as amended at 59 FR 43071, Aug. 22, 1994; 73 FR 8497, Feb. 13, 2008]

§ 217.13 Information collection.

(a) The information collection requirements in this part have been reviewed by the Office of Management and Budget pursuant to the Paperwork Reduction Act of 1980, Public Law 96–511, and have been assigned OMB control number 2130–0035.

(b) The information collection requirements are found in the following sections:

(1) Section 217.7.

(2) Section 217.9.

(3) Section 217.11.

[50 FR 7919, Feb. 27, 1985. Redesignated and amended at 59 FR 43071, Aug. 22, 1994]

APPENDIX A TO PART 217—SCHEDULE OF CIVIL PENALTIES [1]

Section	Violation	Willful violation
217.7 Operating rules:		
(a)	$2,500	$5,000
(b)	$2,000	$5,000
(c)	$2,500	$5,000
217.9 Operational tests and inspections:		
(a) Failure to implement a program	$9,500–12,500	$13,000–16,000
(b) Railroad and railroad testing officer responsibilities:.		
(1) Failure to provide instruction, examination, or field training, or failure to conduct tests in accordance with program	9,500	13,000
(2) Records	7,500	11,000
(c) Record of program; program incomplete	7,500–12,500	11,000–16,000
(d) Records of individual tests and inspections	7,500	
(e) Failure to retain copy of or conduct:.		
(1)(i) Quarterly review	9,500	13,000
(1)(ii) and (2) Six month review	9,500	13,000
(3) Records	7,500	11,000
(f) Annual summary	7,500	11,000
(h) Failure to timely or appropriately amend program after disapproval	9,500–12,500	13,000–16,000
217.11 Program of instruction on operating rules:		
(a)	$5,000	$7,500
(b)	$2,500	$5,000

[1] A penalty may be assessed against an individual only for a willful violation. The Administrator reserves the right to assess a penalty of up to $27,000 for any violation where circumstances warrant. See 49 CFR part 209, appendix A.

[59 FR 43071, Aug. 22, 1994, as amended at 63 FR 11620, Mar. 10, 1998; 69 FR 30593, May 28, 2004; 73 FR 8497, Feb. 13, 2008]

PART 218—RAILROAD OPERATING PRACTICES

Subpart A—General

Sec.
218.1 Purpose.
218.3 Application.
218.4 Preemptive effect.
218.5 Definitions.
218.7 Waivers.
218.9 Civil penalty.
218.11 Filing, testing, and instruction.

Subpart B—Blue Signal Protection of Workers

218.21 Scope.
218.22 Utility employee.
218.23 Blue signal display.
218.24 One-person crew.
218.25 Workers on a main track.
218.27 Workers on track other than main track.
218.29 Alternate methods of protection.
218.30 Remotely controlled switches.

Subpart C—Protection of Trains and Locomotives

218.31 Scope.
218.35 Yard limits.
218.37 Flag protection.
218.39 Hump operations.
218.41 Noncompliance with hump operations rule.

Subpart D—Prohibition Against Tampering With Safety Devices

218.51 Purpose.
218.53 Scope and definitions.
218.55 Tampering prohibited.
218.57 Responsibilities of individuals.
218.59 Responsibilities of railroads.
218.61 Authority to deactivate safety devices.

Subpart E—Protection of Occupied Camp Cars

218.71 Purpose and scope.
218.73 Warning signal display.
218.75 Methods of protection for camp cars.
218.77 Remotely controlled switches.
218.79 Alternative methods of protection.
218.80 Movement of occupied camp cars.

Subpart F—Handling Equipment, Switches, and Fixed Derails

218.91 Purpose and scope.
218.93 Definitions.
218.95 Instruction, training, and examination.
218.97 Good faith challenge procedures.
218.99 Shoving or pushing movements.

218.101 Leaving rolling and on-track maintenance-of-way equipment in the clear.
218.103 Hand-operated switches, including crossover switches.
218.105 Additional operational requirements for hand-operated main track switches.
218.107 Additional operational requirements for hand-operated crossover switches.
218.109 Hand-operated fixed derails.
APPENDIX A TO PART 218—SCHEDULE OF CIVIL PENALTIES
APPENDIX B TO PART 218—STATEMENT OF AGENCY ENFORCEMENT POLICY ON BLUE SIGNAL PROTECTION FOR UTILITY EMPLOYEES
APPENDIX C TO PART 218—STATEMENT OF AGENCY ENFORCEMENT POLICY ON TAMPERING
APPENDIX D TO PART 218—REQUIREMENTS AND CONSIDERATIONS FOR IMPLEMENTING TECHNOLOGY AIDED POINT PROTECTION

AUTHORITY: 49 U.S.C. 20103, 20107; 28 U.S.C. 2461, note; and 49 CFR 1.49.

SOURCE: 44 FR 2175, Jan. 10, 1979, unless otherwise noted.

Subpart A—General

§218.1 Purpose.

This part prescribes minimum requirements for railroad operating rules and practices. Each railroad may prescribe additional or more stringent requirements in its operating rules, timetables, timetable special instructions, and other special instructions.

§218.3 Application.

(a) Except as provided in paragraph (b) of this section, this part applies to railroads that operate rolling equipment on standard gage track which is part of the general railroad system of transportation.

(b) This part does not apply to—

(1) A railroad that operates only on track inside an installation which is not part of the general railroad system of transportation, or

(2) Rapid transit operations in an urban area that are not connected with the general railroad system of transportation.

[44 FR 2175, Jan. 10, 1979, as amended at 53 FR 28599, July 28, 1988]

§218.4 Preemptive effect.

Normal State negligence standards apply where there is no Federal action covering the subject matter. Under 49 U.S.C. 20106 (section 20106), issuance of the regulations in this part preempts any State law, regulation, or order covering the same subject matter, except an additional or more stringent law, regulation, or order that is necessary to eliminate or reduce an essentially local railroad safety or railroad security hazard; that is not incompatible with a law, regulation, or order of the United States Government; and that does not unreasonably burden interstate commerce. Section 20106 permits State tort actions arising from events or activities occurring on or after January 18, 2002, for the following: Violation of the Federal standard of care established by regulation or order issued the Secretary of Transportation (with respect to railroad safety, such as these regulations) or the Secretary of Homeland Security (with respect to railroad security); a party's violation of, or failure to comply with, its own plan, rule, or standard that it created pursuant to a regulation or order issued by either of the two Secretaries; and a party's violation of a State standard that is necessary to eliminate or reduce an essentially local safety or security hazard, is not incompatible with a law, regulation, or order of the United States Government, and does not unreasonably burden interstate commerce. Nothing in section 20106 creates a Federal cause of action on behalf of an injured party or confers Federal question jurisdiction for such State law causes of action.

[73 FR 8498, Feb. 13, 2008]

§218.5 Definitions.

Absolute block means a block in which no train is permitted to enter while it is occupied by another train.

Blue signal means a clearly distinguishable blue flag or blue light by day and a blue light at night. When attached to the operating controls of a locomotive, it need not be lighted if the inside of the cab area of the locomotive is sufficiently lighted so as to make the blue signal clearly distinguishable.

Camp car means any on-track vehicle, including outfit, camp, or bunk cars or modular homes mounted on flat cars used to house rail employees. It does not include wreck trains.

Car shop repair track area means one or more tracks within an area in which the testing, servicing, repair, inspection, or rebuilding of railroad rolling equipment is under the exclusive control of mechanical department personnel.

Controlling locomotive means a locomotive arranged as having the only controls over all electrical, mechanical and pneumatic functions for one or more locomotives, including controls transmitted by radio signals if so equipped. It does not include two or more locomotives coupled in multiple which can be moved from more than one set of locomotive controls.

Designated crew member means an individual designated under the railroad's operating rules as the point of contact between a train or yard crew and a utility employee working with that crew.

Effective locking device when used in relation to a manually operated switch or a derail means one which is:

(1) Vandal resistant;

(2) Tamper resistant; and

(3) Capable of being locked and unlocked only by the class, craft or group of employees for whom the protection is being provided.

Flagman's signals means a red flag by day and a white light at night, and fusees as prescribed in the railroad's operating rules.

Group of workers means two or more workers of the same or different crafts assigned to work together as a unit under a common authority and who are in communication with each other while the work is being done.

Interlocking limits means the tracks between the opposing home signals of an interlocking.

Locomotive means, except for purposes of subpart F of this part, a self-propelled unit of equipment designed for moving other railroad rolling equipment in revenue service including a self-propelled unit designed to carry freight or passenger traffic, or both, and may consist of one or more units operated from a single control.

Locomotive servicing track area means one or more tracks, within an area in which the testing, servicing, repair, inspection, or rebuilding of locomotives is under the exclusive control of mechanical department personnel.

Main track means a track, other than an auxiliary track, extending through yards or between stations, upon which trains are operated by timetable or train order or both, or the use of which is governed by a signal system.

Rolling equipment includes locomotives, railroad cars, and one or more locomotives coupled to one or more cars.

Switch providing access means a switch which if traversed by rolling equipment could permit that rolling equipment to couple to the equipment being protected.

Train or yard crew means one or more railroad employees assigned a controlling locomotive, under the charge and control of one crew member; called to perform service covered by Section 2 of the Hours of Service Act; involved with the train or yard movement of railroad rolling equipment they are to work with as an operating crew; reporting and working together as a unit that remains in close contact if more than one employee; and subject to the railroad operating rules and program of operational tests and inspections required in §§ 217.9 and 217.11 of this chapter.

Utility employee means a railroad employee assigned to and functioning as a temporary member of a train or yard crew whose primary function is to assist the train or yard crew in the assembly, disassembly or classification of rail cars, or operation of trains (subject to the conditions set forth in § 218.22 of this chapter).

Worker means any railroad employee assigned to inspect, test, repair, or service railroad rolling equipment, or their components, including brake systems. Members of train and yard crews are excluded except when assigned such work on railroad rolling equipment that is not part of the train or yard movement they have been called to operate (or been assigned to as ''utility employees''). Utility employees assigned to and functioning as temporary members of a specific train or yard crew (subject to the conditions set forth in § 218.22 of this chapter), are excluded only when so assigned and functioning.

NOTE: Servicing does not include supplying cabooses, locomotives, or passenger cars with items such as ice, drinking water, tools, sanitary supplies, stationery, or flagging equipment.

Testing does not include (i) visual observations made by an employee positioned on or alongside a caboose, locomotive, or passenger car; or (ii) marker inspections made in accordance with the provisions of § 221.16(b) of this chapter.

[58 FR 43292, Aug. 16, 1993, as amended at 60 FR 11049, Mar. 1, 1995; 73 FR 8498, Feb. 13, 2008]

§ 218.7 Waivers.

(a) A railroad may petition the Federal Railroad Administration for a waiver of compliance with any requirement prescribed in this part.

(b) Each petition for a waiver under this section must be filed in the manner and contain the information required by part 211 of this chapter.

(c) If the Administrator finds that waiver of compliance is in the public interest and is consistent with railroad safety, he may grant the waiver subject to any conditions he deems necessary. Notice of each waiver granted, including a statement of the reasons, therefore, is published in the FEDERAL REGISTER.

§ 218.9 Civil penalty.

Any person (an entity of any type covered under 1 U.S.C. 1, including but not limited to the following: a railroad; a manager, supervisor, official, or other employee or agent of a railroad; any owner, manufacturer, lessor, or lessee of railroad equipment, track, or facilities; any independent contractor providing goods or services to a railroad; and any employee of such owner, manufacturer, lessor, lessee, or independent contractor) who violates any requirement of this part or causes the violation of any such requirement is subject to a civil penalty of at least $550 and not more than $16,000 per violation, except that: Penalties may be assessed against individuals only for willful violations, and, where a grossly negligent violation or a pattern of repeated violations has created an imminent hazard of death or injury to persons, or has caused death or injury, a penalty not to exceed $27,000 per violation may be assessed. Each day a violation continues shall constitute a separate offense. See appendix A to this part for a statement of agency civil penalty policy.

[53 FR 28599, July 28, 1988, as amended at 53 FR 52928, Dec. 29, 1988; 63 FR 11621, Mar. 10, 1998; 69 FR 30593, May 28, 2004; 72 FR 51196, Sept. 6, 2007]

§ 218.11 Filing, testing, and instruction.

The operating rules prescribed in this part, and any additional or more stringent requirements issued by a railroad in relation to the operating rules prescribed in this part, shall be subject to the provisions of part 217 of this chapter, Railroad Operating Rules: Filing, Testing, and Instruction.

Subpart B—Blue Signal Protection of Workers

§ 218.21 Scope.

This subpart prescribes minimum requirements for the protection of railroad employees engaged in the inspection, testing, repair, and servicing of rolling equipment whose activities require them to work on, under, or between such equipment and subjects them to the danger of personal injury posed by any movement of such equipment.

§ 218.22 Utility employee.

(a) A utility employee shall be subject to the Hours of Service Act, and the requirements for training and testing, control of alcohol and drug use, and hours of service record keeping provided for in parts 217, 219, and 228 of this chapter.

(b) A utility employee shall perform service as a member of only one train or yard crew at any given time. Service with more than one crew may be sequential, but not concurrent.

(c) A utility employee may be assigned to and serve as a member of a train or yard crew without the protection otherwise required by subpart D of part 218 of this chapter only under the following conditions:

(1) The train or yard crew is assigned a controlling locomotive that is under

the actual control of the assigned locomotive engineer of that crew;

(2) The locomotive engineer is in the cab of the controlling locomotive, or, while the locomotive is stationary be replaced in the cab by another member of the same crew;

(3) The utility employee established communication with the crew by contacting the designated crew member on arriving at the train (as defined for the purpose of this section as one or more locomotives coupled, with or without cars) and before commencing any duties with the crew.

(4) Before each utility employee commences duties, the designated crew member shall provide notice to each crew member of the presence and identity of the utility employee. Once all crew members have acknowledged this notice, the designated crew member shall advise the utility employee that he or she is authorized to work as part of the crew. Thereafter, communication shall be maintained in such a manner that each member of the train or yard crew understands the duties to be performed and whether those duties will cause any crew member to go on, under, or between the rolling equipment; and

(5) The utility employee is performing one or more of the following functions: set or release hand brakes; couple or uncouple air hoses and other electrical or mechanical connections; prepare rail cars for coupling; set wheel blocks or wheel chains; conduct air brake tests to include cutting air brake components in or out and position retaining valves; inspect, test, install, remove or replace a rear end marking device or end of train device. Under all other circumstances a utility employee working on, under, or between railroad rolling equipment must be provided with blue signal protection in accordance with §§ 218.23 through 218.30 of this part.

(d) When the utility employee has ceased all work in connection with that train and is no longer on, under, or between the equipment, the utility employee shall notify the designated crew member. The designated crew member shall then provide notice to each crew member that the utility employee is being released from the crew. Once each crew member has acknowledged the notice, the designated crew member shall then notify the utility employee that he is released from the train or yard crew.

(e) Communications required by § 218.22(c)(4) and (d) shall be conducted between the utility employee and the designated crew member. This communications shall be conducted either through direct verbal contact, by radio in compliance with part 220 of this chapter, or by oral telecommunication of equivalent integrity.

(f) No more than three utility employees may be attached to one train or yard crew at any given time.

(g) Any railroad employee who is not assigned to a train or yard crew, or authorized to work with a crew under the conditions set forth by paragraph (b) of this section, is a worker required to be provided blue signal protection in accordance with §§ 218.23 through 218.30 of this part.

(h) Nothing in this section shall affect the alternative form of protection specified in § 221.16 of this chapter with respect to inspection of rear end marking devices.

[58 FR 43293, Aug. 16, 1993, as amended at 60 FR 11050, Mar. 1, 1995]

§ 218.23 Blue signal display.

(a) Blue signals displayed in accordance with § 218.25, 218.27, or 218.29 signify that workers are on, under, or between rolling equipment. When so displayed—

(1) The equipment may not be coupled to;

(2) The equipment may not be moved, except as provided for in § 218.29;

(3) Other rolling equipment may not be placed on the same track so as to reduce or block the view of a blue signal, except as provided for in § 218.29 (a), (b) and (c); and

(4) Rolling equipment may not pass a displayed blue signal.

(b) Blue signals must be displayed in accordance with § 218.25, 218.27, or 218.29 by each craft or group of workers prior to their going on, under, or between rolling equipment and may only be removed by the same craft or group that displayed them.

§ 218.24 One-person crew.

(a) An engineer working alone as a one-person crew shall not perform duties on, under, or between rolling equipment, without blue signal protection that complies with § 218.27 or § 218.29, unless the duties to be performed are listed in § 218.22(c)(5) and the following protections are provided:

(1) Each locomotive in the locomotive engineer's charge is either:

(i) Coupled to the train or other railroad rolling equipment to be assisted; or

(ii) Stopped a sufficient distance from the train or rolling equipment to ensure a separation of at least 50 feet; and

(2) Before a controlling locomotive is left unattended, the one-member crew shall secure the locomotive as follows:

(i) The throttle is in the IDLE position;

(ii) The generator field switch is in the OFF position;

(iii) The reverser handle is removed (if so equipped);

(iv) The isolation switch is in the ISOLATE position;

(v) The locomotive independent (engine) brake valve is fully applied;

(vi) The hand brake on the controlling locomotive is fully applied (if so equipped); and

(vii) A bright orange engineer's tag (a tag that is a minimum of three by eight inches with the words ASSIGNED LOCOMOTIVE—DO NOT OPERATE) is displayed on the control stand of the controlling locomotive.

(b) When assisting another train or yard crew with the equipment the other crew was assigned to operate, a single engineer must communicate directly, either by radio in compliance with part 220 of this chapter or by oral telecommunication of equivalent integrity, with the crew of the train to be assisted. The crews of both trains must notify each other in advance of all moves to be made by their respective equipment. Prior to attachment or detachment of the assisting locomotive(s), the crew of the train to be assisted must inform the single engineer that the train is secured against movement. The crew of the train to be assisted must not move the train or permit the train to move until authorized by the single engineer.

[60 FR 11050, Mar. 1, 1995]

EFFECTIVE DATE NOTE: Section 218.24 was added at 60 FR 11050, Mar. 1, 1995, effective May 15, 1995. At 60 FR 30469, June 9, 1995, § 218.24 was suspended, effective May 15, 1995.

§ 218.25 Workers on a main track.

When workers are on, under, or between rolling equipment on a main track:

(a) A blue signal must be displayed at each end of the rolling equipment; and

(b) If the rolling equipment to be protected includes one or more locomotives, a blue signal must be attached to the controlling locomotive at a location where it is readily visible to the engineman or operator at the controls of that locomotive.

(c) When emergency repair work is to be done on, under, or between a locomotive or one or more cars coupled to a locomotive, and blue signals are not available, the engineman or operator must be notified and effective measures must be taken to protect the workers making the repairs.

[44 FR 2175, Jan. 10, 1979, as amended at 48 FR 6123, Feb. 10, 1983]

§ 218.27 Workers on track other than main track.

When workers are on, under, or between rolling equipment on track other than main track—

(a) A blue signal must be displayed at or near each manually operated switch providing access to that track;

(b) Each manually operated switch providing access to the track on which the equipment is located must be lined against movement to that track and locked with an effective locking device; and

(c) The person in charge of the workers must have notified the operator of any remotely controlled switch that work is to be performed and have been informed by the operator that each remotely controlled switch providing access to the track on which the equipment is located has been lined against movement to that track and locked as prescribed in § 218.30.

(d) If rolling equipment requiring blue signal protection as provided for

in this section is on a track equipped with one or more crossovers, both switches of each crossover must be lined against movement through the crossover toward that rolling equipment, and the switch of each crossover that provides access to the rolling equipment must be protected in accordance with the provisions of paragraphs (a) and (b), or (c) of this section.

(e) If the rolling equipment to be protected includes one or more locomotives, a blue signal must be attached to the controlling locomotive at a location where it is readily visible to the engineman or operator at the controls of that locomotive.

§ 218.29 Alternate methods of protection.

Instead of providing blue signal protection for workers in accordance with § 218.27, the following methods for blue signal protection may be used:

(a) When workers are on, under, or between rolling equipment in a locomotive servicing track area:

(1) A blue signal must be displayed at or near each switch providing entrance to or departure from the area;

(2) Each switch providing entrance to or departure from the area must be lined against movement to the area and locked with an effective locking device; and

(3) A blue signal must be attached to each controlling locomotive at a location where it is readily visible to the engineman or operator at the controls of that locomotive;

(4) If the speed within this area is resticted to not more than 5 miles per hour a derail, capable of restricting access to that portion of a track within the area on which the rolling equipment is located, will fulfill the requirements of a manually operated switch in compliance with paragraph (a)(2) of this section when positioned at least 50 feet from the end of the equipment to be protected by the blue signal, when locked in a derailing position with an effective locking device, and when a blue signal is displayed at the derail;

(5) A locomotive may be moved onto a locomotive servicing area track after the blue signal has been removed from the entrance switch to the area. However, the locomotive must be stopped short of coupling to another locomotive;

(6) A locomotive may be moved off of a locomotive servicing area track after the blue signal has been removed from the controlling locomotive to be moved and from the area departure switch;

(7) If operated by an authorized employee under the direction of the person in charge of the workers, a locomotive protected by blue signals may be repositioned within this area after the blue signal has been removed from the locomotive to be repositioned and the workers on the affected track have been notified of the movement; and

(8) Blue signal protection removed for the movement of locomotives as provided in paragraphs (a) (5) and (6) of this section must be restored immediately after the locomotive has cleared the switch.

(b) When workers are on, under, or between rolling equipment in a car shop repair track area:

(1) A blue signal must be displayed at or near each switch providing entrance to or departure from the area; and

(2) Each switch providing entrance to or departure from the area must be lined against movement to the area and locked with an effective locking device;

(3) If the speed within this area is restricted to not more than 5 miles per hour, a derail capable of restricting access to that portion of a track within the area on which the rolling equipment is located will fulfill the requirements of a manually operated switch in compliance with paragraph (a)(2) of this section when positioned at least 50 feet from the end of the equipment to be protected by the blue signal, when locked in a derailing position with an effective locking device and when a blue signal is displayed at the derail;

(4) If operated by an authorized employee under the direction of the person in charge of the workemen, a car mover may be used to reposition rolling equipment within this area after workers on the affected track have been notified of the movement.

(c) Except as provided in paragraphs (a) and (b) of this section, when workers are on, under, or between rolling equipment on any track, other than a main track:

(1) A derail capable of restricting access to that portion of the track on which such equipment is located, will fulfill the requirements of a manually operated switch when positioned no less than 150 feet from the end so such equipment; and

(2) Each derail must be locked in a derailing position with an effective locking device and a blue signal must be displayed at each derail.

(d) When emergency repair work is to be done on, under, or between a locomotive or one or more cars coupled to a locomotive, and blue signals are not available, the engineman or operator at the controls of that locomotive must be notified and effective measures must be taken to protect the workers making the repairs.

[44 FR 2175, Jan. 10, 1979, as amended at 48 FR 6123, Feb. 10, 1983]

§ 218.30 Remotely controlled switches.

(a) After the operator of the remotely controlled switches has received the notification required by § 218.27(c), he must line each remotely controlled switch against movement to that track and apply an effective locking device to the lever, button, or other device controlling the switch before he may inform the employee in charge of the workers that protection has been provided.

(b) The operator may not remove the locking device unless he has been informed by the person in charge of the workers that it is safe to do so.

(c) The operator must maintain for 15 days a written record of each notification which contains the following information:

(1) The name and craft of the employee in charge who provided the notification;

(2) The number or other designation of the track involved;

(3) The date and time the operator notified the employee in charge that protection had been provided in accordance with paragraph (a) of this section; and

(4) The date and time the operator was informed that the work had been completed, and the name and craft of the employee in charge who provided this information.

[44 FR 2175, Jan. 10, 1979, as amended at 48 FR 6123, Feb. 10, 1983]

Subpart C—Protection of Trains and Locomotives

§ 218.31 Scope.

This subpart prescribes minimum operating rule requirements for the protection of railroad employees engaged in the operation of trains, locomotives and other rolling equipment.

[42 FR 5065, Jan. 27, 1977]

§ 218.35 Yard limits.

(a) After August 1, 1977, yard limits must be designated by—

(1) Yard limit signs, and

(2) Timetable, train orders, or special instructions.

(b) After August 1, 1977, each railroad must have in effect an operating rule which complies with the requirements set forth below:

(1) The main tracks within yard limits may be used, clearing the time an approaching designated class train is due to leave the nearest station where time is shown. In case of failure to clear the time of designated class trains, protection must be provided as § 218.37. In yard limits where main tracks are governed by block signal system rules, protection as prescribed by § 218.37 is not required.

(2) Trains and engines, except designated class trains, within yard limits must move prepared to stop within onehalf the range of vision but not exceeding 20 m.p.h. unless the main track is known to be clear by block signal indications.

(3) Within yard limits, movements against the current of traffic on the main tracks must not be made unless authorized and protected by train order, yardmaster, or other designated official and only under the operating restrictions prescribed in § 218.35(b)(2).

(c) Each railroad shall designate in the operating rule prescribed under paragraph (b) of this section the class

or classes of trains which shall have superiority on the main track within yard limits.

[42 FR 5065, Jan. 27, 1977]

§ 218.37 Flag protection.

(a) After August 1, 1977, each railroad must have in effect an operating rule which complies with the requirements set forth below:

(1) Except as provided in paragraph (a)(2) of this section, flag protection shall be provided—

(i) When a train is moving on the main track at less than one-half the maximum authorized speed (including slow order limits) in that territory, flag protection against following trains on the same track must be provided by a crew member by dropping off single lighted fusees at intervals that do not exceed the burning time of the fusee.

(ii) When a train is moving on the main track at more than one-half the maximum authorized speed (including slow order limits) in that territory under circumstances in which it may be overtaken, crew members responsible for providing protection will take into consideration the grade, curvature of track, weather conditions, sight distance and relative speed of his train to following trains and will be governed accordingly in the use of fusees.

(iii) When a train stops on main track, flag protection against following trains on the same track must be provided as follows: A crew member with flagman's signals must immediately go back at least the distance prescribed by timetable or other instructions for the territory and display one lighted fusee. The crew member may then return one-half of the distance to the crew member's train where the crew member must remain until the crew member has stopped the approaching train or is recalled. When recalled, the crew member must leave one lighted fusee and while returning to the crew member's train, the crew member must also place single lighted fusees at intervals that do not exceed the burning time of the fusee. When the train departs, a crew member must leave one lighted fusee and until the train resumes speed not less than one-half the maximum authorized speed (including slow order limits) in that territory, the crew member must drop off single lighted fusees at intervals that do not exceed the burning time of the fusee.

(iv) When required by the railroad's operating rules, a forward crew member with flagman's signals must protect the front of the crew member's train against opposing movements by immediately going forward at least the distance prescribed by timetable or other instructions for the territory, displaying one lighted fusee, and remaining at that location until recalled.

(v) Whenever a crew member is providing flag protection, he must not permit other duties to interfere with the protection of his train.

(2) Flag protection against following trains on the same track is not required if—

(i) The rear of the train is protected by at least two block signals;

(ii) The rear of the train is protected by an absolute block;

(iii) The rear of the train is within interlocking limits; or

(iv) A train order specifies that flag protection is not required.

(v) A railroad operates only one train at any given time.

(b) Each railroad shall designate by timetable or other instruction for each territory the specific distance which a crew member providing flag protection must go out in order to provide adequate protection for his train.

(c) Whenever the use of fusees is prohibited by a Federal, State or local fire regulation, each railroad operating within that jurisdiction shall provide alternate operating procedures to assure full protection of trains in lieu of flag protection required by this section.

[42 FR 5065, Jan. 27, 1977, as amended at 42 FR 38362, July 28, 1977; 73 FR 8498, Feb. 13, 2008]

§ 218.39 Hump operations.

After June 30, 1984, each railroad that operates a remote control hump yard facility must have in effect an operating rule that adopts the following provisions in substance:

(a) When a train or engine service employee is required to couple an air hose or to adjust a coupling device and that activity will require that the employee place himself between pieces of

rolling equipment located on a bowl track, the operator of any remotely controlled switch that provides access from the apex of the hump to the track on which the rolling equipment is located shall be notified;

(b) Upon such notification, the operator of such remotely controlled switch shall line it against movement to the affected bowl track and shall apply a locking or blocking device to the control for that switch; and

(c) The operator shall then notify the employee that the requested protection has been provided and shall remove the locking or blocking device only after being notified by the employee that protection is no longer required on that track.

(Sec. 202, 84 Stat. 971 (45 U.S.C. 431); sec. 1.49(m) of the regulations of the Secretary of Transportation (49 CFR 1.49(m))

[49 FR 6497, Feb. 22, 1984]

§ 218.41 Noncompliance with hump operations rule.

A person (including a railroad and any manager, supervisor, official, or other employee or agent of a railroad) who fails to comply with a railroad's operating rule issued pursuant to § 218.39 of this part is subject to a penalty, as provided in appendix A of this part.

[53 FR 52928, Dec. 29, 1988]

Subpart D—Prohibition Against Tampering With Safety Devices

SOURCE: 54 FR 5492, Feb. 3, 1989, unless otherwise noted.

§ 218.51 Purpose.

(a) The purpose of this subpart is to prevent accidents and casualties that can result from the operation of trains when safety devices intended to improve the safety of their movement have been disabled.

(b) This subpart does not prohibit intervention with safety devices that is permitted:

(1) Under the provisions of § 236.566 or § 236.567 of this chapter;

(2) Under the provisions of § 218.61 of this part; or

(3) Under the provisions of § 229.9 of this chapter, provided that when a locomotive is being operated under the provision of § 229.9(b) a designated officer has been notified of the defective alerter or deadman pedal at the first available point of communication.

[54 FR 5492, Feb. 3, 1989, as amended at 58 FR 36613, July 8, 1993]

§ 218.53 Scope and definitions.

(a) This subpart establishes standards of conduct for railroads and individuals who operate or permit to be operated locomotives equipped with one or more of the safety devices identified in paragraph (c) of this section.

(b) *Disable* means to unlawfully render a device incapable of proper and effective action or to materially impair the functioning of that device.

(c) *Safety device* means any locomotive-mounted equipment that is used either to assure that the locomotive operator is alert, not physically incapacitated, aware of and complying with the indications of a signal system or other operational control system or to record data concerning the operation of that locomotive or the train it is powering. See appendix B to this part for a statement of agency policy on this subject.

§ 218.55 Tampering prohibited.

Any individual who willfully disables a safety device is subject to a civil penalty as provided in appendix A of this part and to disqualification from performing safety-sensitive functions on a railroad if found unfit for such duties under the procedures provided for in 49 CFR part 209.

§ 218.57 Responsibilities of individuals.

Any individual who knowingly operates a train, or permits it to be operated, when the controlling locomotive of that train is equipped with a disabled safety device, is subject to a civil penalty as provided for in appendix A of this part and to disqualification from performing safety-sensitive functions on a railroad if found to be unfit for such duties. See appendix B to this part for a statement of agency enforcement policy concerning violations of this section.

§ 218.59 Responsibilities of railroads.

Any railroad that operates a train when the controlling locomotive of a train is equipped with a disabled safety device is subject to a civil penalty as provided for in appendix A of this part.

§ 218.61 Authority to deactivate safety devices.

(a) For the purpose of this chapter, it is lawful to temporarily render a safety device incapable of proper or effective action or to materially impair its function if this action is taken as provided for in paragraph (b) or (c) of this section.

(b) If a locomotive is equipped with a device to assure that the operator is alert or not physically incapacitated, that device may be deactivated when:

(1) The locomotive is not the controlling locomotive;

(2) The locomotive is performing switching operations and not hauling cars in a manner that constitutes a train movement under part 232 of this chapter:

(3) The locomotive is dead-in-tow; or

(4) The locomotive is a mid-train slave unit being controlled by radio from a remote location.

(c) If a locomotive is equipped with a device to record data concerning the operation of that locomotive and/or of the train it is powering, that device may be deactivated only in accordance with the provisions of § 229.135.

[54 FR 5492, Feb. 3, 1989, as amended at 58 FR 36613, July 8, 1993]

Subpart E—Protection of Occupied Camp Cars

SOURCE: 54 FR 39545, Sept. 27, 1989, unless otherwise noted.

§ 218.71 Purpose and scope.

This subpart prescribes minimum requirements governing protection of camp cars that house railroad employees. The rule does not apply to such cars while they are in a train.

§ 218.73 Warning signal display.

(a) Warning signals, *i.e.*, a white disk with the words ''Occupied Camp Car'' in black lettering during daylight hours and an illuminated white signal at night, displayed in accordance with § 218.75, § 218.77, or § 218.79 signify that employees are in, around, or in the vicinity of camp cars. Once the signals have been displayed—

(1) The camp cars may not be moved for coupling to other rolling equipment or moved to another location;

(2) Rolling equipment may not be placed on the same track so as to reduce or block the view of a warning signal; and

(3) Rolling equipment may not pass a warning signal.

(b) Warning signals indicating the presence of occupied camp cars, displayed in accordance with §§ 218.75 and 218.79, shall be displayed by a designated occupant of the camp cars or that person's immediate supervisor. The signal(s) shall be displayed as soon as such cars are placed on the track, and such signals may only be removed by those same individuals prior to the time the cars are moved to another location.

§ 218.75 Methods of protection for camp cars.

When camp cars requiring protection are on either main track or track other than main track:

(a) A warning signal shall be displayed at or near each switch providing access to that track;

(b) The person in charge of the camp car occupants shall immediately notify the person responsible for directing train movements on that portion of the railroad where the camp cars are being parked;

(c) Once notified of the presence of camp cars and their location on main track or other than main track, the person responsible for directing train movements on that portion of the railroad where the camp cars are being parked shall take appropriate action to alert affected personnel to the presence of the cars;

(d) Each manually operating switch providing access to track on which the camp cars are located shall be lined against movement to that track and secured with an effective locking device and spiked; and

(e) Each remotely controlled switch providing access to the track on which

the camp cars are located shall be protected in accordance with § 218.77.

§ 218.77 Remotely controlled switches.

(a) After the operator of the remotely controlled switch is notified that a camp car is to be placed on a particular track, he shall line such switch against movement to that track and apply an effective locking device applied to the lever, button, or other device controlling the switch before informing the person in charge of the camp car occupants that protection has been provided.

(b) The operator may not remove the locking device until informed by the person in charge of the camp car occupants that protection is no longer required.

(c) The operator shall maintain for 15 days a written record of each notification that contains the following information:

(1) The name and craft of the employee in charge who provided the notification;

(2) The number or other designation of the track involved;

(3) The date and time the operator notified the employee in charge that protection had been provided in accordance with paragraph (a) of this section; and

(4) The date and time the operator was informed that the work had been completed, and the name and craft of the employee in charge who provided this information.

(d) When occupied camp cars are parked on main track, a derail, capable of restricting access to that portion of the track on which such equipment is located, shall be positioned no less than 150 feet from the end of such equipment and locked in a derailing position with an effective locking device, and a warning signal must be displayed at the derail.

§ 218.79 Alternative methods of protection.

Instead of providing protection for occupied camp cars in accordance with § 218.75 or § 218.77, the following methods of protection may be used:

(a) When occupied camp cars are on track other than main track:

(1) A warning signal must be displayed at or near each switch providing access to or from the track;

(2) Each switch providing entrance to or departure from the area must be lined against movement to the track and locked with an effective locking device; and

(3) If the speed within this area is restricted to not more than five miles per hour, a derail, capable of restricting access to that portion of track on which the camp cars are located, will fulfill the requirements of a manually operated switch in compliance with paragraph (a)(2) of this section when positioned at least 50 feet from the end of the camp cars to be protected by the warning signal, when locked in a derailing position with an effective locking device, and when a warning signal is displayed at the derail.

(b) Except as provided in paragraph (a) of this section, when occupied camp cars are on track other than main track:

(1) A derail, capable of restricting access to that portion of the track on which such equipment is located, will fulfill the requirements of a manually operated switch when positioned no less than 150 feet from the end of such equipment; and

(2) Each derail must be locked in a derailing position with an effective locking device and a warning signal must be displayed at each derail.

§ 218.80 Movement of occupied camp cars.

Occupied cars may not be humped or flat switched unless coupled to a locomotive.

Subpart F—Handling Equipment, Switches, and Fixed Derails

SOURCE: 73 FR 8498, Feb. 13, 2008, unless otherwise noted.

§ 218.91 Purpose and scope.

(a) The purpose of this subpart is to prevent accidents and casualties that can result from the mishandling of equipment, switches, and fixed derails.

(b) This subpart prescribes minimum operating rule requirements for the handling of equipment, switches, and

fixed derails. Each railroad may prescribe additional or more stringent requirements in its operating rules, timetables, timetable special instructions, and other instructions.

§ 218.93 Definitions.

As used in this subpart—

Associate Administrator for Safety means the Associate Administrator for Safety of the Federal Railroad Administration or that person's delegate as designated in writing.

Clearance point means the location near a turnout beyond which it is unsafe for passage on an adjacent track(s). Where a person is permitted by a railroad's operating rules to ride the side of a car, a clearance point shall accommodate a person riding the side of a car.

Correspondence of crossover switches means both crossover switches are lined for the crossover or both are lined for the straight tracks.

Crossover means, for purposes of this subpart only, a track connection between two adjacent, but not necessarily parallel, tracks, consisting of two switches, which is intended to be used primarily for the purpose of crossing over from one track to another.

Departure track means a track located in a classification yard where rolling equipment is placed and made ready for an outgoing train movement.

Employee means an individual who is engaged or compensated by a railroad or by a contractor to a railroad to perform any of the duties defined in this subpart.

Foul or fouling a track means rolling equipment or on-track maintenance-of-way equipment is located such that the end of the equipment is between the clearance point and the switch points leading to the track on which the equipment is standing.

FRA means the Federal Railroad Administration.

Hand-operated switch means any type of switch when operated by manual manipulation. For purposes of this subpart, a hand-operated switch does not include switches operated by push button or radio control when such switch is protected by distant switch indicators, switch point indicators, or other visual or audio verification that the switch points are lined for the intended route and fit properly.

Highway-rail grade crossing means, for purposes of this subpart only, an at-grade crossing where a public highway, road, street, or private roadway, including associated sidewalks and pathways, crosses one or more railroad tracks at grade, and is identified by a U.S. DOT National Highway-Rail Grade Crossing Inventory Number, or is marked by crossbucks, stop signs, or other appropriate signage indicating the presence of an at-grade crossing.

Industry track means a switching track, or series of tracks, serving the needs of a commercial industry other than a railroad.

Lite locomotive consist means two or more locomotive units coupled without cars attached, regardless of whether the locomotive units are connected so that they may be operated from a single control stand.

Locomotive means, for purposes of this subpart only, a piece of on-track equipment (other than specialized roadway maintenance equipment or a dual purpose vehicle operating in accordance with § 240.104(a)(2) of this chapter):

(1) With one or more propelling motors designed for moving other equipment;

(2) With one or more propelling motors designed to carry freight or passenger traffic or both; or

(3) Without propelling motors but with one or more control stands.

Pedestrian crossing means a separate designated sidewalk or pathway where pedestrians, but not vehicles, cross railroad tracks. Sidewalk crossings contiguous with, or separate but adjacent to, highway-rail grade crossings, are presumed to be part of the highway-rail grade crossings and are *not* considered pedestrian crossings.

Qualified means that a person has successfully completed all instruction, training, and examination programs required by the railroad and this subpart and that the person, therefore, has actual knowledge or may reasonably be expected to have knowledge of the subject on which the person is expected to be competent.

Remote control operator means a locomotive engineer, as defined in § 240.7 of

this chapter, certified by a railroad to operate remote control locomotives pursuant to § 240.107 of this chapter.

Remote control zone means one or more tracks within defined limits designated in the timetable special instructions, or other railroad publication, within which remote control locomotives, under certain circumstances specified in this part, may be operated without an employee assigned to protect the pull-out end of the remote control movement, i.e., the end on which the locomotive is located.

Roadway maintenance activity means any work limited to the duties prescribed for a roadway worker by definition in this section, including movement of on-track maintenance-of-way equipment other than locomotives.

Roadway worker means any employee of a railroad, or of a contractor to a railroad, whose duties include inspection, construction, maintenance or repair of railroad track, bridges, roadway, signal and communication systems, electric traction systems, roadway facilities or roadway maintenance machinery on or near track or with the potential of fouling a track, and flagmen and watchmen/lookouts as defined in § 214.7 of this chapter.

Roadway worker in charge means a roadway worker who is qualified in accordance with § 214.353 of this chapter for the purpose of establishing on-track safety for roadway work groups.

Siding means an auxiliary track, adjacent and connected to a main track, used for meeting or passing trains.

Signaled siding means a siding within traffic control system (TCS) territory or within interlocking limits where a signal indication authorizes the siding's use.

Switchtender means a qualified employee assigned to handle switches at a specific location.

Track is clear means:

(1) The portion of the track to be used for the intended movement is unoccupied by rolling equipment, on-track maintenance-of-way equipment, and conflicting on-track movements;

(2) Intervening public highway-rail grade crossings, private highway-rail grade crossings outside the physical confines of a railroad yard, pedestrian crossings outside of the physical confines of a railroad yard, and yard access crossings are protected as follows:

(i) Crossing gates are in the fully lowered position, and are not known to be malfunctioning; or

(ii) A designated and qualified employee is stationed at the crossing and has the ability to communicate with trains; or

(iii) At crossings equipped only with flashing lights or passive warning devices, when it is clearly seen that no traffic is approaching or stopped at the crossing and the leading end of the movement over the crossing does not exceed 15 miles per hour;

(3) Intervening switches and fixed derails are properly lined for the intended movement; and

(4) The portion of the track to be used for the intended movement has sufficient room to contain the rolling equipment being shoved or pushed.

Yard access crossing means a private highway-rail grade crossing that is located within the physical confines of a railroad yard and is either:

(1) Open to unrestricted public access; or

(2) Open to persons other than railroad employees going about their normal duties, e.g., business guests or family members.

[73 FR 8498, Feb. 13, 2008, as amended at 73 FR 33902, June 16, 2008]

§ 218.95 Instruction, training, and examination.

(a) *Program.* Beginning January 1, 2009, each railroad shall maintain a written program of instruction, training, and examination of employees for compliance with operating rules implementing the requirements of this subpart to the extent these requirements are pertinent to the employee's duties. If all requirements of this subpart are satisfied, a railroad may consolidate any portion of the instruction, training or examination required by this subpart with the program of instruction required under § 217.11 of this chapter. An employee who successfully completes all instruction, training, and examination required by this written program shall be considered qualified.

(1) The written program of instruction, training, and examination shall

address the requirements of this subpart, as well as consequences of noncompliance.

(2) The written program of instruction, training, and examination shall include procedures addressing how the railroad qualifies employees in any technology necessary to accomplish work subject to the requirements of this subpart. Such procedures shall include, but are not limited to, those which explain:

(i) The purpose for using the technology;

(ii) How an employee will be expected to use the technology;

(iii) How to detect malfunctioning equipment or deviations from proper procedures;

(iv) How to respond when equipment malfunctions or deviations from proper procedures are detected; and

(v) How to prevent unintentional interference with the proper functioning of the technology.

(3) *Implementation schedule for employees, generally*. Each employee performing duties subject to the requirements in this subpart shall be initially qualified prior to July 1, 2009.

(4) Beginning July 1, 2009, no employee shall perform work requiring compliance with the operating rules implementing the requirements of this subpart unless qualified on these rules within the previous three years.

(5) The records of successful completion of instruction, examination and training required by this section shall document qualification of employees under this subpart.

(b) Written records documenting successful completion of instruction, training, and examination of each employee required by this subpart shall be retained at its system headquarters and at the division headquarters for each division where the employee is assigned for three calendar years after the end of the calendar year to which they relate and made available to representatives of the FRA for inspection and copying during normal business hours. Each railroad to which this part applies is authorized to retain a program, or any records maintained to prove compliance with such a program, by electronic recordkeeping in accordance with §§ 217.9(g) and 217.11(c) of this chapter.

(c) Upon review of the program of instruction, training, and examination required by this section, the Associate Administrator for Safety may, for cause stated, disapprove the program. Notification of such disapproval shall be made in writing and specify the basis for the disapproval decision. If the Associate Administrator for Safety disapproves the program,

(1) The railroad has 35 days from the date of the written notification of such disapproval to:

(i) Amend its program and submit it to the Associate Administrator for Safety for approval; or

(ii) Provide a written response in support of the program to the Associate Administrator for Safety, who informs the railroad of FRA's final decision in writing; and

(2) A failure to submit the program with the necessary revisions to the Associate Administrator for Safety in accordance with this paragraph will be considered a failure to implement a program under this part.

[73 FR 8498, Feb. 13, 2008, as amended at 73 FR 33902, June 16, 2008]

§ 218.97 Good faith challenge procedures.

(a) *Employee responsibility*. An employee shall inform the railroad or employer whenever the employee makes a good faith determination that the employee has been directed to either take actions that would violate FRA regulations regarding the handling of equipment, switches, and fixed derails as required by this subpart, or to take actions that would violate the railroad's operating rules implementing the requirements of this subpart.

(b) *General procedures*. Each railroad or employer is responsible for the training of and compliance by its employees with the requirements of this subpart.

(1) Each railroad or employer shall adopt and implement written procedures which guarantee each employee the right to challenge in good faith whether the procedures that will be used to accomplish a specific task comply with the requirements of this subpart or any operating rule relied upon

to fulfill the requirements of this subpart. Each railroad or employer's written procedures shall provide for prompt and equitable resolution of challenges made in accordance with this subpart.

(2) The written procedures required by this section shall indicate that the good faith challenge described in paragraph (b)(1) of this section is not intended to abridge any rights or remedies available to the employee under a collective bargaining agreement, or any Federal law including, but not limited to, 29 U.S.C. 651 *et seq.*, 6 U.S.C. 1142, or 49 U.S.C. 20109.

(3) Each affected employee shall be instructed on the written procedures required by this paragraph as part of the training prescribed by § 217.11 of this chapter.

(4) A copy of the current written procedures shall be provided to each affected employee and made available for inspection and copying by representatives of the FRA during normal business hours.

(c) The written procedures shall—

(1) Grant each employee the right to challenge any directive which, based on the employee's good faith determination, would cause the employee to violate any requirement of this subpart or any operating rule relied upon to fulfill the requirements of this subpart;

(2) Provide that the railroad or employer shall not require the challenging employee to comply with the directive until the challenge resulting from the good faith determination is resolved;

(3) Provide that the railroad or employer may require the challenging employee to perform tasks unrelated to the challenge until the challenge is resolved;

(4) Provide that the railroad or employer may direct an employee, other than the challenging employee, to perform the challenged task prior to the challenge being resolved as long as this other employee is informed of the challenge and does not also make a good faith determination that the challenged task would violate FRA regulations regarding the handling of equipment, switches, and fixed derails as required in this subpart, or a railroad's operating rules implementing the requirements of this subpart;

(5) Provide that a challenge may be resolved by:

(i) A railroad or employer officer's acceptance of the employee's request;

(ii) An employee's acceptance of the directive;

(iii) An employee's agreement to a compromise solution acceptable to the person issuing the directive; or

(iv) As further determined under paragraph (d) of this section.

(d) In the event that the challenge cannot be resolved because the person issuing the directive determines that the employee's challenge has not been made in good faith or there is no reasonable alternative to the direct order, the written procedures shall:

(1) Provide for immediate review by at least one officer of the railroad or employer, except for each railroad with less than 400,000 total employee work hours annually. This immediate review shall:

(i) Not be conducted by the person issuing the challenged directive, or that person's subordinate; and

(ii) Provide that a challenge may be resolved by using the same options available for resolving the challenge as the initial officer as well as the option described in paragraph (d)(2) of this section, except that the reviewing officer's decision shall not be subject to further immediate review, unless provided for in the railroad's or employer's written procedures;

(2) Provide that if the officer making the railroad's or employer's final decision concludes that the challenged directive would not cause the employee to violate any requirement of this subpart or the railroad's or employer's operating rule relied upon to fulfill the requirements of this subpart and directs the employee to perform the challenged directive, the officer shall further explain to the employee that Federal law may protect the employee from retaliation if the employee refuses to do the work and if the employee's refusal is a lawful, good faith act;

(3) Provide that the employee be afforded an opportunity to document electronically or in writing any protest to the railroad or employer's final decision before the tour of duty is complete. The employee shall be afforded

the opportunity to retain a copy of the protest;

(4) Provide that the employee, upon written request, has a right to further review by a designated railroad or employer officer, within 30 days after the expiration of the month during which the challenge occurred, for the purpose of verifying the proper application of the regulation, law, procedure or rule in question. The verification decision shall be made in writing to the employee.

(e) *Recordkeeping and record retention.* (1) A copy of the written procedures required by this section shall be retained at the employer or railroad's system headquarters and at each division headquarters, and made available to representatives of the FRA for inspection and copying during normal business hours.

(2) A copy of any written good faith challenge verification decision, made in accordance with paragraph (d)(4) of this section, shall be retained at the employer or railroad's system headquarters and at the division headquarters to which the employee was working when the challenge was initiated, and made available to representatives of the FRA for inspection and copying during normal business hours for at least one calendar year after expiration of the year during which the decision was issued.

(3) Each employer or railroad to which this subpart applies is authorized to retain by electronic recordkeeping the information prescribed in this subpart in accordance with the electronic recordkeeping standards set forth in § 217.9(g)(1) through (5) of this chapter.

§ 218.99 Shoving or pushing movements.

(a)(1) Each railroad shall adopt and comply with an operating rule which complies with the requirements of this section. When any person including, but not limited to, each railroad, railroad officer, supervisor, and employee violates any requirement of an operating rule which complies with the requirements of this section, that person shall be considered to have violated the requirements of this section.

(2) The following requirements for shoving or pushing movements do not apply to rolling equipment intentionally shoved or pushed to permit the rolling equipment to roll without power attached, i.e., free rolling equipment, during switching activities known as kicking, humping, or dropping cars.

(b) *General movement requirements*—(1) *Job briefing.* Rolling equipment shall not be shoved or pushed until the locomotive engineer participating in the move has been briefed by the employee who will direct the move. The job briefing shall include the means of communication to be used between the locomotive engineer and the employee directing the move and how point protection will be provided.

(2) *No unrelated tasks.* During the shoving or pushing movement, the employee directing the movement shall not engage in any task unrelated to the oversight of the shoving or pushing movement.

(3) *Point protection.* When rolling equipment or a lite locomotive consist is shoved or pushed, point protection shall be provided by a crewmember or other qualified employee by:

(i) Visually determining that the track is clear. The determination that the track is clear may be made with the aid of monitored cameras or other technological means, provided that it and the procedures for use provide an equivalent level of protection to that of a direct visual determination by a crewmember or other qualified employee properly positioned to make the observation as prescribed in this section and appendix D to this part; and

(ii) Giving signals or instructions necessary to control the movement.

(c) *Additional requirements for remote control movements.* All remote control movements are considered shoving or pushing movements, except when the remote control operator controlling the movement is riding the leading end of the leading locomotive in a position to visually determine conditions in the direction of movement. In addition to the other requirements of this section,

(1) When initiating a remote control shoving or pushing movement:

(i) The remote control operator shall visually determine the direction the equipment moves; or

(ii) A member of the crew shall visually determine the direction the equipment moves and confirm the direction with the remote control operator. If no confirmation is received, the movement shall be immediately stopped; and

(2) If technology is relied upon, whether primarily or as a safeguard, to provide pull-out protection by preventing the movement from exceeding the limits of a remote control zone, the technology shall be demonstrated

(i) To be failsafe; or

(ii) To provide suitable redundancy to prevent unsafe failure.

(d) *Remote control zone, exception to track is clear requirements.* After an initial track is clear determination has been made in an activated remote control zone, it is not necessary to make a new determination prior to each subsequent shoving or pushing movement provided that:

(1) The controlling locomotive of the remote control movement is on the leading end in the direction of movement, i.e., the movement occurs on the pull-out end;

(2) The remote control zone is not jointly occupied; and

(3) The initial determination was made by a crewmember of either:

(i) The remote control crew;

(ii) A relieved remote control crew who has transferred the remote control zone directly to the relieving crew; or

(iii) The last jointly occupying crew who directly communicates, i.e., not through a third party, to a remote control crewmember that the remote control zone is no longer jointly occupied and meets the requirements for track is clear.

(e) *Operational exceptions.* A railroad does not need to comply with paragraphs (b) through (d) of this section in the following circumstances:

(1) Push-pull operations when operated from the leading end in the direction of movement, i.e., push mode;

(2) Shoving or pushing operations with manned helper locomotives or distributed power locomotives assisting a train when the train is being operated from the leading end in the direction of movement;

(3) During the performance of roadway maintenance activity under the direct control of a roadway worker performing work in accordance with railroad operating rules specific to roadway workers; or

(4) When the leading end of a shoving movement is on a main track or signaled siding, under the following conditions:

(i) The train dispatcher gives authority or permission to make the movement and verifies that:

(A) Another movement or work authority is not in effect within the same or overlapping limits unless conflicting movements are protected; and

(B) A main track is not removed from service by a work authority within the same or overlapping limits;

(ii) Movement is limited to the train's authority;

(iii) Movement shall not be made into or within yard limits, restricted limits, drawbridges, or work authority limits;

(iv) Movement shall not enter or foul a highway-rail grade crossing or pedestrian crossing except when:

(A) Crossing gates are in the fully lowered position; or

(B) A designated and qualified employee is stationed at the crossing and has the ability to communicate with trains; or

(C) At crossings equipped only with flashing lights or passive warning devices, when it is clearly seen that no traffic is approaching or stopped at the crossing and the leading end of the movement over the crossing does not exceed 15 miles per hour; and

(v) Movement shall not be made into or within interlocking limits or controlled point limits unless the following conditions are met:

(A) The signal governing movement is more favorable than restricting aspect;

(B) Each signal governing movement into and through interlocking limits or controlled point limits shall be continuously observed by a member of that crew who is in a position to determine that the train's movement has occupied the circuit controlling that

signal as evidenced by that signal assuming its most restrictive aspect; and

(C) The movement does not exceed the train's length.

(5) Shoving or pushing movements made in the direction of the circuited end of a designated departure track equipped with a shove light system, if all of the following conditions are met:

(i) The shove light system is demonstrated to be failsafe;

(ii) The shove light system is arranged to display a less favorable aspect when the circuited section of the track is occupied;

(iii) Written procedures are adopted and complied with that provide for a reliable means of determining track occupancy prior to commencing a shoving or pushing movement;

(iv) The track is designated in writing;

(v) The track is under the exclusive and continuous control of a yardmaster or other qualified employee;

(vi) The train crewmember or other qualified employee directing the shoving or pushing movement complies with the general movement requirements contained in paragraphs (b)(1) and (b)(2) of this section;

(vii) All remote control shoving or pushing movements comply with the requirements contained in paragraph (c)(1) of this section; and

(viii) The shove light system is continuously illuminated when the circuited section of the track is unoccupied.

[73 FR 8498, Feb. 13, 2008, as amended at 73 FR 33902, June 16, 2008]

§ 218.101 Leaving rolling and on-track maintenance-of-way equipment in the clear.

(a) Each railroad shall adopt and comply with an operating rule which complies with the requirements of this section. When any person including, but not limited to, each railroad, railroad officer, supervisor, and employee violates any requirement of an operating rule which complies with the requirements of this section, that person shall be considered to have violated the requirements of this section.

(b) Rolling and on-track maintenance-of-way equipment shall not be left where it will foul a connecting track unless:

(1) The equipment is standing on a main track and a siding track switch that the equipment is fouling is lined for the main track on which the equipment is standing; or

(2) The equipment is standing on a siding and a main track switch that the equipment is fouling is lined for the siding on which the equipment is standing; or

(3) The equipment is standing on a yard switching lead track, and the yard track switch that the equipment is fouling is lined for the yard switching lead track on which the equipment is standing; or

(4) The equipment is on an industry track beyond the clearance point of the switch leading to the industry.

(c) Each railroad shall implement procedures that enable employees to identify clearance points and a means to identify locations where clearance points will not permit a person to safely ride on the side of a car.

§ 218.103 Hand-operated switches, including crossover switches.

(a)(1) Each railroad shall adopt and comply with an operating rule which complies with the requirements of this section. When any person including, but not limited to, each railroad, railroad officer, supervisor, and employee violates any requirement of an operating rule which complies with the requirements of this section, that person shall be considered to have violated the requirements of this section.

(2) Each railroad shall specify minimum requirements necessary for an adequate job briefing.

(b) *General*. Employees operating or verifying the position of a hand-operated switch shall:

(1) Conduct job briefings, before work is begun, each time a work plan is changed, and at completion of the work;

(2) Be qualified on the railroad's operating rules relating to the operation of the switch;

(3) Be individually responsible for the position of the switch in use;

(4) Visually determine that switches are properly lined for the intended

route and that no equipment is fouling the switches;

(5) Visually determine that the points fit properly and the target, if so equipped, corresponds with the switch's position;

(6) After operating a switch and before making movements in either direction over the switch, ensure that the switch is secured from unintentional movement of the switch points;

(7) Ensure that a switch is not operated while rolling and on-track maintenance-of-way equipment is fouling the switch, or standing or moving over the switch; and

(8) After operating a switch, ensure that when not in use, each switch is locked, hooked, or latched, if so equipped.

(c) Rolling and on-track maintenance-of-way equipment shall not foul a track until all hand-operated switches connected with the movement are properly lined, or in the case of hand-operated switches designed and permitted to be trailed through, until the intended route is seen to be clear or the train has been granted movement authority. When a conflicting movement is approaching a hand-operated switch, the track shall not be fouled or the switch operated.

(d) When rolling and on-track maintenance-of-way equipment has entered a track, the hand-operated switch to that track shall not be lined away from the track until the equipment has passed the clearance point of the track.

§ 218.105 Additional operational requirements for hand-operated main track switches.

(a) Each railroad shall adopt and comply with an operating rule which complies with the requirements of this section. When any person including, but not limited to, each railroad, railroad officer, supervisor, and employee violates any requirement of an operating rule which complies with the requirements of this section, that person shall be considered to have violated the requirements of this section.

(b) *Designating switch position.* The normal position of a hand-operated main track switch shall be designated by the railroad in writing and the switch shall be lined and locked in that position when not in use except when:

(1) The train dispatcher directs otherwise with respect to the position of a hand-operated main track switch and the necessary protection is provided; or

(2) The hand-operated switch is left in the charge of a crewmember of another train, a switchtender, or a roadway worker in charge.

(c) *Additional job briefing requirements for hand-operated main track switches.*

(1) Before a train or a train crew leaves the location where any hand-operated main track switch was operated, all crewmembers shall have verbal communication to confirm the position of the switch.

(2) In the case of exclusive track occupancy authority established under § 214.321, foul time under § 214.323, or train coordination under § 214.325, when a roadway worker qualified to operate hand-operated main track switches is granted permission by the roadway worker in charge to occupy or otherwise use the limits of the exclusive track occupancy, such employee receiving permission to occupy the working limits shall report the position of any such switches operated upon expiration of the authority limits to the roadway worker in charge or to a designated intermediary employee who shall convey the switch position to the roadway worker in charge.

(d) *Releasing authority limits.* In non-signaled territory, before an employee releases the limits of a main track authority and a hand-operated switch is used to clear the main track, and, prior to departing the switch's location, the following conditions are required:

(1) The employee releasing the limits, after conducting a job briefing in accordance with this subpart, shall report to the train dispatcher that the hand-operated main track switch has been restored to its normal position and locked, unless the train dispatcher directs that the hand-operated main track switch be left lined and locked in the reverse position and the necessary protection is provided;

(2) If the report of the switch position is correct, the train dispatcher shall repeat the reported switch position information to the employee releasing the

limits and ask whether that is correct; and

(3) The employee releasing the limits shall then confirm to the train dispatcher that this information is correct.

§ 218.107 Additional operational requirements for hand-operated crossover switches.

(a) Each railroad shall adopt and comply with an operating rule which complies with the requirements of this section. When any person including, but not limited to, each railroad, railroad officer, supervisor, and employee violates any requirement of an operating rule which complies with the requirements of this section, that person shall be considered to have violated the requirements of this section.

(b) *Hand-operated crossover switches, generally*. Both hand-operated switches of a crossover shall be properly lined before rolling and on-track maintenance-of-way equipment begins a crossover movement. A crossover movement shall be completed before either hand-operated crossover switch is restored to normal position.

(c) *Correspondence of hand-operated crossover switches*. Hand-operated crossover switches shall be left in corresponding position except when:

(1) Used to provide blue signal protection under § 218.27 of this part; or

(2) Used for inaccessible track protection under § 214.327 of this chapter; or

(3) Performing maintenance, testing or inspection of crossover switches in traffic control system (TCS) territory; or

(4) One crew is using both tracks connected by the crossover during continuous switching operations.

§ 218.109 Hand-operated fixed derails.

(a)(1) Each railroad shall adopt and comply with an operating rule which complies with the requirements of this section. When any person including, but not limited to, each railroad, railroad officer, supervisor, and employee violates any requirement of an operating rule which complies with the requirements of this section, that person shall be considered to have violated the requirements of this section.

(2) Each railroad shall specify minimum requirements necessary for an adequate job briefing.

(b) *General*. (1) The normal position of fixed derails is in the derailing position except as provided in part 218, subpart B of this chapter, or the railroad's operating rules or special instructions.

(2) Fixed derails shall be kept in the derailing position whether or not any rolling and on-track maintenance-of-way equipment is on the tracks they protect, except as provided in paragraph (b)(1) of this section or when changed to permit movement.

(3) Movement must not be made over a fixed derail in the derailing position.

(c) Employees operating or verifying the position of a fixed derail shall:

(1) Conduct job briefings, before work is begun, each time a work plan is changed, and at completion of the work;

(2) Be qualified on the railroad's operating rules relating to the operation of the derail;

(3) Be individually responsible for the position of the derail in use;

(4) Determine that the target, if so equipped, corresponds with the derail's position;

(5) Determine that the derail is secured by:

(i) Placing the throw lever in the latch stand, if so equipped;

(ii) Placing the lock or hook in the hasp, if so equipped; and

(iii) Testing such latches, locks or hooks; and

(6) Ensure that when not in use, derails are locked, hooked, or latched in the normal position if so equipped.

APPENDIX A TO PART 218—SCHEDULE OF CIVIL PENALTIES[1]

Section	Violation	Willful violation
Subpart B—Blue signal protection of workmen:		
218.22 Utility employees:		
(a) Employee qualifications	$5,000	$7,500
(b) Concurrent service	5,000	7,500
(c) Assignment conditions.		
(1) No controlling locomotive	5,000	7,500
(2) Empty cab	5,000	7,500
(3)(4) Improper communication	5,000	7,500
(5) Performing functions not listed	2,000	4,000
(d) Improper release of utility employee	2,000	4,000
(f) More than three utility employees with one crew	2,000	4,000
218.23 Blue signal display	5,000	7,500
218.24 One-person crew:		
(a)(1) Equipment not coupled or insufficiently separated	2,000	4,000
(a)(2) Unoccupied locomotive cab not secured	5,000	7,500
(b) Helper service	2,000	4,000
218.25 Workmen on a main track	5,000	7,500
218.27 Workmen on track other than main track:		
(a) Protection provided except that signal not displayed at switch	2,000	4,000
(b) through (e)	5,000	7,500
218.29 Alternate methods of protection:		
(a)(1) protection provided except that signal not displayed at switch	2,000	4,000
(a)(2) through (a)(8)	5,000	7,500
(b)(1) Protection provided except that signal not displayed at switch	2,000	4,000
(b)(2) through (b)(4)	5,000	7,500
(c) Use of derails	5,000	7,500
(d) Emergency repairs	5,000	7,500
218.30 Remotely controlled switches:		
(a) and (b)	5,000	7,500
(c)	1,000	2,000
Subpart C—Protection of trains and locomotives:		
218.35 Yard limits:		
(a) and (b)	5,000	7,500
(c)	1,000	2,000
218.37 Flag protection:		
(a)	5,000	7,500
(b) and (c)	5,000	7,500
218.39 Hump operations	5,000	7,500
218.41 Noncompliance with hump operations rule	5,000	7,500
Subpart D—Prohibition against tampering with safety devices:		
218.55 Tampering	.....	7,500
218.57 (i) Knowingly operating or permitting operation of disabled equipment	2,500	.....
(ii) Willfully operating or permitting operation of disabled equipment	.....	5,000
218.59 Operation of disabled equipment	2,500	5,000
Subpart F—Handling Equipment, Switches and Derails:		
218.95 Instruction, Training, and Examination:.		
(a) Program	9,500–12,500	13,000–16,000
(b) Records	7,500	11,000
(c) Failure to timely or appropriately amend program after disapproval	9,500–12,500	13,000–16,000
218.97 Good Faith Challenge Procedures:		
(a) Employee Responsibility Failure	.....	5,000
(b) through (d) Failure to adopt or implement procedures	7,500	
218.99 Shoving or Pushing Movements:		
(a) Failure to implement required operating rule	9,500	
(b) Failure to conduct job briefing, use a qualified employee, or establish proper protection	7,500–9,500	11,000–13,000
(c) Failure to observe equipment direction	9,500	13,000
(d) Failure to properly establish point protection within a remote control zone	9,500	13,000
(e) Failure to abide by operational exception requirements	9,500	13,000

[1] Except as provided for in §218.57, a penalty may be assessed against an individual only for a willful violation. The Administrator reserves the right to assess a penalty of up to $27,000 for any violation where the circumstances warrant. See 49 CFR part 209, appendix A.

Section	Violation	Willful violation
218.101 Leaving Equipment in the Clear:		
(a) Failure to implement required operating rule	9,500	
(b) Equipment left improperly fouling	9,500	13,000
(c) Failure to implement procedures for identifying clearance points	9,500	13,000
218.103 Hand-operated switches, including crossover switches:		
(a) Failure to implement required operating rule	9,500	
(b) through (d) Railroad and employee failures	7,500	
218.105 Additional operational requirements for hand-operated main track switches:		
(a) Failure to implement required operating rule	9,500	
(b) and (c) Railroad and employee failures	7,500	11,000
(d) Failure to properly release authority limits	12,500	
218.107 Additional operational requirements for hand-operated crossover switches:		
(a) Failure to implement required operating rule	9,500	
(b) and (c) Railroad and employee failures	7,500	11,000
218.109 Hand-operated fixed derails:		
(a) Failure to implement required operating rule	9,500	13,000
(b) and (c) Railroad and employee failures	7,500	11,000

[53 FR 52928, Dec. 29, 1988, as amended at 54 FR 5492, Feb. 3, 1989; 58 FR 43293, Aug. 16, 1993; 60 FR 11050, Mar. 1, 1995; 63 FR 11621, Mar. 10, 1998; 72 FR 51196, Sept. 6, 2007; 73 FR 8503, Feb. 13, 2008]

APPENDIX B TO PART 218—STATEMENT OF AGENCY ENFORCEMENT POLICY ON BLUE SIGNAL PROTECTION FOR UTILITY EMPLOYEES

The following examples of the application of the train or yard crew exclusion from required blue signal protection for utility employees are provided to clarify FRA's enforcement policy. In the first four examples, the utility employee is properly attached to and functioning as member of a train or yard crew and is excluded from blue signal protection, provided all the conditions specified in § 218.22 are met:

Example 1: A utility employee assists a train crew by adding or reducing railroad cars to or from the train. The utility employee may perform any duties which would normally be conducted by members of the train crew, i.e., setting or releasing handbrakes, coupling air hoses and other connections, prepare rail cars for coupling, and perform air brake tests.

Example 2: A utility employee is assigned to assist a yard crew for the purpose of classifying and assembling railroad cars. The yard crew onboard their locomotive arrives at the location in the yard where the work is to be performed. At that time, the utility employee may attach himself to the yard crew and commence duties as a member of that yard crew.

Example 3: A utility employee is assigned to inspect, test, remove and replace if necessary, a combination rear end marking device/end of train device on a through freight train. The utility employee attaches himself to the train crew after the arrival of the train and its crew at the location where this work is to be conducted. He may then perform duties as a member of that crew.

Example 4: A railroad manager who properly attaches himself as a utility employee to a train or yard crew, in accordance with § 218.22, may then function as a member of the train or yard crew under the exclusion provided for train and yard crews.

NOTE: In the last four examples, any railroad employee, including regularly assigned crew members, would need blue signal protection to perform the described function.

Example 5: Prior to the arrival of a through freight train, a utility employee installs an end-of-train device on one end of a block of railroad cars that are scheduled to be picked up by the freight train.

Example 6: A railroad employee attaches himself to a train or yard crew while the crew is in the ready room preparing to take charge of their train. Prior to the train crew leaving the ready room and taking charge of the equipment, the employee couples air hoses and other connections between the locomotives.

Example 7: A railroad employee is attached to a train crew after the train crew has taken charge of the train. It is necessary for the employee to perform a repair on a rail car, such as replacing a brake shoe, in addition to those duties normally performed by train or yard crew members.

Example 8: A train or yard crew, supplemented by three utility employees, has an assigned locomotive and train. The regular crew, including the engineer, has left the train to eat lunch. The utility employees have remained with the train and are coupling air hoses between rail cars in the train.

[58 FR 43293, Aug. 16, 1993]

APPENDIX C TO PART 218—STATEMENT OF AGENCY ENFORCEMENT POLICY ON TAMPERING

The Rail Safety Improvement Act of 1988 (Pub. L. 100–342, enacted June 22, 1988) (''RSIA'') raised the maximum civil penalties available under the railroad safety laws and made individuals liable for willful violations of those laws. Section 21 of the RSIA requires that FRA adopt regulations addressing three related but distinct aspects of problems that can occur when safety devices are tampered with or disabled. It requires that FRA make it unlawful for (i) any individual to willfully tamper with or disable a device; (ii) any individual to knowingly operate or permit to be operated a train with a tampered or disabled device; and (iii) any railroad to operate such a train.

Because the introduction of civil penalties against individuals brings FRA's enforcement of the rail safety laws into a new era and because the changes being introduced by this regulation are so significant, FRA believes that it is advisable to set forth the manner in which it will exercise its enforcement authority under this regulation.

SAFETY DEVICES COVERED BY THIS RULE

FRA has employed a functional description of what constitutes a safety device under this rule. FRA's wording effectively identifies existing equipment and is sufficiently expansive to cover equipment that may appear in the future, particularly devices associated with advanced train control systems currently undergoing research testing.

FRA has been advised by portions of the regulated community that its functional definition has some potential for confusing people who read the rule without the benefit of the preamble discussions concerning the meaning of this definition. Since this rule is specifically intended to preclude misconduct by individuals, FRA wants this rule to be easily comprehended by all who read it. To achieve that clarity, FRA has decide to specify which types of equipment it considers to be within the scope of this rule and provide some examples of equipment that is not covered. In addition, FRA is ready and willing to respond in writing to any inquiry about any other devices that a party believes are treated ambiguously under this rule. This regulation applies to a variety of devices including equipment known as ''event recorders,'' ''alerters,'' ''deadman controls,'' ''automatic cab signals,'' ''cab signal whistles,'' ''automatic train stop equipment,'' and ''automatic train control equipment.'' FRA does not consider the following equipment to be covered by this rule: Radios; monitors for end-of-train devices; bells or whistles that are not connected to alerters, deadman pedals, or signal system devices; fans for controlling interior temperature of locomotive cabs; and locomotive performance monitoring devices, unless they record data such as train speed and air brake operations. Although FRA considers such devices beyond the scope of the regulation, this does not imply that FRA condones the disabling of such devices. FRA will not hesitate to include such devices at a later date should instances of tampering with these devices be discovered. FRA does not currently perceive a need to directly proscribe tampering with such devices because there is no history of these devices being subjected to tampering.

SUBSEQUENT OPERATORS OF TRAINS WITH DISABLED DEVICES

Section 218.57 addresses instances in which one individual has tampered with a safety device and a second individual (a ''subsequent operator'') knowingly operates a train or permits it to be operated, notwithstanding the presence of the disabled or tampered-with unit. The most common occurrence addressed by this provision is the situation in which a train crew encounters a locomotive with a safety device that has been tampered with prior to the crew's assuming responsibility for the locomotive. FRA has structured this provision and its attendant enforcement policy to reflect the fact that instances in which one individual encounters a locomotive that someone else has tampered with are relatively infrequent occurrences.

FRA's regulatory prohibition for subsequent operator conduct reflects the legal standard for individual culpability set forth in the RSIA. Under the relevant statutory standard (''knowingly operates or permits to be operated a train on which such devices have been tampered with or disabled by another person'')—now incorporated into §218.57—individuals could be held to a simple negligence standard of conduct, i.e., a standard of reasonable care under the circumstances. FRA's conclusion about the proper interpretation of the word ''knowingly'' stems from both normal canons of statutory construction and analysis of decisional law concerning the use of similar statutory constructs in the civil penalty context. It is also consistent with other Departmental interpretations of the word as used in similar contexts. (See 49 CFR 107.299, defining ''knowingly'' under the Hazardous Materials Transportation Act, 49 App. U.S.C. 1801 *et seq.*)

Under that statutory language, the responsible members of the crew could be culpable if either (1) due to their failure to exercise reasonable care, they failed to determine that the safety device was not functioning, or (2) having ascertained that the device was not functioning, still elected to operate the train. Similarly, railroad supervisors who

permit or direct that a train with a disabled device be operated after having learned that the safety device is not functioning or after having failed to use reasonable care in the performance of their duties could also be subject to sanction.

However, as a matter of enforcement policy, application of a negligence standard in this particular context presently appears unwarranted. We have seen no evidence of an employee's negligent failure to detect another employee's tampering having caused a safety problem. FRA can effectively attack the known dimensions of the tampering problem by employing an enforcement policy that limits its enforcement actions to situations where individuals clearly had actual knowledge of the disabled device and intentionally operated the train notwithstanding that knowledge.

Therefore, FRA will not take enforcement action against an individual under § 218.57 absent a showing of such actual knowledge of the facts. Actual, subjective knowledge need not be demonstrated. It will suffice to show objectively that the alleged violator must have known the facts based on reasonable inferences drawn from the circumstances. For example, it is reasonable to infer that a person knows about something plainly in sight on the locomotive he is operating. Also, unlike the case where willfulness must be shown (see FRA's statement of policy at 49 CFR part 209, appendix A), knowledge of or reckless disregard for the law need not be shown to make out a violation of § 218.57. The knowledge relevant here is knowledge of the facts constituting the violation, not knowledge of the law.

Should FRA receive evidence indicating that a stricter enforcement policy is necessary to address the tampering problem, it will revise its enforcement policy to permit enforcement actions based only on a showing of the subsequent operator's negligent failure to detect the tampering, as the relevant provision of the RSIA permits it to do now. Any such change in enforcement policy will become effective only after publication of a revised version of this appendix.

[54 FR 5492, Feb. 3, 1989. Redesignated and amended at 58 FR 43293, Aug. 16, 1993]

APPENDIX D TO PART 218—REQUIREMENTS AND CONSIDERATIONS FOR IMPLEMENTING TECHNOLOGY AIDED POINT PROTECTION

INTRODUCTION

This appendix provides further explanation and requirements for exercising the option to provide point protection with the aid of technology as permitted in § 218.99(b)(3)(i). The regulation permits the visual determination necessary to provide point protection, i.e., a determination that the track is clear, for a shoving or pushing movement to ''be made with the aid of monitored cameras or other technological means, provided that it and the procedures for use provide an equivalent level of protection to that of a direct visual determination by a crewmember or other qualified employee properly positioned to make the observation as prescribed in this section and appendix D to this part.'' This appendix addresses the general requirements and considerations for all technology aided point protection as well as specific additional requirements for those operations involving remote control operations at public highway-rail grade crossings, private highway-rail grade crossings outside the physical confines of a railroad yard, pedestrian crossings outside the physical confines of a railroad yard, and yard Access Crossings.

I. GENERAL REQUIREMENTS AND CONSIDERATIONS

A. Although railroading is now one of the nation's older forms of mechanized transportation, equipment, components and operations all have evolved through new and improved technologies. Installing cameras in yards so that a location could be remotely monitored from somewhere else has become a railroading reality as cameras have become smaller, less expensive, and have increased resolution. It is possible to set up these cameras and monitors so that they provide at least an equivalent level of safety to that of an employee protecting the point. Part 218, subpart F permits such an operation to substitute for an employee's direct visual determination where the technology provides an equivalent level of protection to that of a direct visual determination. *See* § 218.99(b)(3)(i). Of course, to provide an equivalent level of protection, an employee needs to be properly qualified (*see* § 218.95(a)(2)) and the technology must work as intended. Most malfunctions of the technology should be detectable, and result in abandoning the use of the technology for determining point protection until the malfunction can be corrected.

B. The substitution of such technology for a direct visual determination is dependent on many factors. Each situation will have its own particular factual circumstances that shall require consideration in determining whether an equivalent level of safety can be achieved. For instance, with regard to the basic camera setup, a railroad shall consider whether an operator must see in color (largely a necessity if viewing signals), the width of the angle of view, the size and location of the monitor, whether the technology is for day-time use only, and whether its use should be limited to fair weather conditions. However, under all circumstances, the monitor shall display sufficient information to

enable the viewer to make a determination that the track ahead of the shoving or pushing move is clear pursuant to the definition of ''track is clear'' in § 218.93.

C. Each railroad that chooses to implement such camera/monitor setups shall implement attendant procedures and qualify each employee who will be utilizing the technology. Railroads shall ensure that any monitored camera has sufficient resolution and real time coverage to provide protection equal to a direct visual determination. *See* § 218.99(b)(3)(i). Concerning attendant procedures, one such procedure may be for an employee viewing a monitor to communicate updates to the locomotive engineer or controlling crewmember at appropriate intervals. FRA equates the employee monitoring the camera to the employee controlling the movement who must not engage in any task unrelated to the oversight of the movement; thus, each railroad utilizing such cameras shall implement attendant procedures limiting any of the monitoring employee's ancillary duties that might distract from the employee's ability to visually determine that the track is clear and provide continuous communication to the employee controlling the movement.

D. There is also the consideration of whether the person viewing the monitor is the locomotive engineer, remote control operator, other crewmember or other qualified person, such as a yardmaster. If the monitor is not being viewed by the operator who is controlling the movement, then, there shall be a clear understanding and channel of communication between the operator and the employee who is viewing the monitor—as the latter would be protecting the movement. Providing an equivalent level of protection to that of a direct visual determination requires a thorough job briefing in which there is an understanding of who is observing the movement, what is the observer's range of vision, at what locomotive speed can the observation be made and how information will be conveyed to the operator/engineer, if that person is not the one viewing the monitor.

E. There may be occasions when a railroad finds it advantageous to use a non-crewmember, e.g., a yardmaster, to provide point protection, line switches, or check the status of a derail for a remote control crew; however, several potential problems may result when non-crewmembers are used to carry out some crewmember functions. Of foremost concern is the great potential for an error in communication or a misunderstanding between the non-crewmember and the crewmembers regarding the activity or status of equipment. A yardmaster who is occupied with his or her other responsibilities might not give the task the attention it deserves, or could be distracted and give an incorrect answer to a question by a crewmember (e.g., ''is the move lined?''). The result could be that the task does not get completed or there is an error in task execution. Further, the crewmembers might not have any alternative way of determining that there is a problem with the point protection provided by the non-crewmember until it is too late. Consequently, to the extent they will be called upon to perform these duties, each railroad shall include yardmasters and other non-crewmembers in any operating rule promulgated in accordance with § 218.99(b)(2).

II. Additional Requirements for Remote Control Locomotive Operations at Highway-Rail Grade Crossings, Pedestrian Crossings, and Yard Access Crossings

A. In addition to the general requirements and considerations for all technology aided point protection in lieu of direct visual determinations, additional requirements are necessary to address concerns specific to the use of camera/monitor setups for remote control locomotive operations to protect the point at highway-rail grade crossings, pedestrian crossings, and yard access crossings. Railroad operating rules currently permit a movement to travel over a crossing without the physical presence of a crewmember if a crossing is equipped with gates, if it can be determined that the gates are in the fully lowered position, and if the crossing is clear of vehicles and pedestrians. Remote control movements at highway-rail grade crossings, pedestrian crossings, and yard access crossings that utilize camera/monitor setups pose a greater direct risk to members of the general public than yard movements utilizing camera/monitor setups to check whether a track is clear. In addition, such setups can rapidly develop problems with motor vehicles and pedestrians unaccustomed to railroad operating rules and procedures. For these reasons, additional safeguards are necessary.

B. In consideration of the dangers posed by the use of camera/monitor setups for remote control locomotive operations at highway-rail grade crossings, pedestrian crossings, and yard access crossings, the following procedures shall be complied with in order to establish an equivalent means of safety in accordance with § 218.99(b)(3)(i):

1. Before camera-assisted remote control locomotive operations are permitted at highway-rail grade crossings, pedestrian crossings, and yard access crossings, a Crossing Diagnostic Team shall evaluate the crossing. The diagnostic team shall have representatives from the railroad, FRA, the State department of transportation (or another State agency having jurisdiction over the highway-rail grade crossing, pedestrian crossing, or yard access crossing), and local government

authorities. The diagnostic team shall evaluate the suitability of each crossing for remote camera operations. Among the factors it shall consider are the following: the average annual daily traffic counts; the number of highway lanes; highway speed limits; the presence of adjacent signalized highway intersections; the number of railroad tracks; the angle of the roadway intersection; the volume of school bus, transit bus, emergency vehicle, commercial motor vehicle, and hazardous materials traffic over the crossing; the minimum remote control locomotive operator sight distances of roadway approaches to the crossing; and other relevant factors that could affect the safety of the crossing. The diagnostic team shall also consider the appropriate number of cameras and appropriate camera angles needed to provide for the remote operation of remote control locomotives over the crossing. The diagnostic team shall agree to a written diagnostic evaluation summary of the factors considered and shall provide the railroad with agreed upon parameters by which the camera-assisted remote control operation may continue in operation if the factors required for suitability change; thus, any change in the factors considered by the diagnostic team outside of the acceptable parameters shall require the railroad to receive a revised evaluation approval from a diagnostic team before continuing any such operation. In addition, any of the Federal, State, or local governmental authorities may trigger review of a prior evaluation approval at any time there is a question of the suitability of the operation. It is possible that, of the requirements listed below, requirements numbered 2, 4, 5, and 6 would be unnecessary at highway-rail grade crossings or yard access crossings equipped with approved supplemental safety devices (*see* 49 CFR part 222, app. A) that prevent motorists from driving around lowered gates; under such circumstances, the diagnostic team shall make such determinations. If a Crossing Diagnostic Team, as described in this paragraph, evaluated a crossing for the factors described herein, prior to April 14, 2008, another diagnostic team evaluation is not required to comply with this rule; however, the requirements listed below shall still apply to any such remotely controlled movements over that crossing.

2. Camera-assisted remote control locomotive operations shall only be permitted at crossings equipped with flashing lights, gates, and constant warning time train detection systems where appropriate, based on train speeds.

3. A crewmember or other qualified employee shall not view the monitor in place of the remote control operator, as is permitted for other shoving or pushing movements. *See* § 218.99(b)(3). For purposes of remote control locomotive operations with camera/monitor setups to protect the point at highway-rail grade crossings, pedestrian crossings, and yard access crossings, the remote control operator controlling the movement shall view the monitor during such operations.

4. The cameras shall be arranged to give the remote control locomotive operator controlling the movement a view of the rail approaches to the crossing from each direction so that the operator can accurately judge the end of the movement's proximity to the crossing.

5. The cameras shall be arranged to give the remote control locomotive operator a clear view to determine the speed and driver behavior (e.g., driving erratically) of any approaching motor vehicles.

6. Either the camera resolution shall be sufficient to determine whether the flashing lights and gates are working as intended or the crossing shall be equipped with a remote health monitoring system that is capable of notifying the remote control locomotive operator immediately if the flashing lights and gates are not working as intended.

7. The railroad shall notify the Associate Administrator for Safety in writing when this type of protection has been installed and activated at a crossing.

III. CONCLUSION

The technology used to aid point protection will undoubtedly develop and improve over time. FRA encourages the use and development of this technology as is evidenced by the option in this rule to utilize such technology. Meanwhile, as a regulating body, FRA cannot determine whether a new technology to aid point protection provides an equivalent level of protection to that of a direct visual determination unless we are made aware of the new technology. Consequently, aside from the camera/monitor setups described in this appendix, each railroad that intends to implement a technology used to aid point protection shall notify the Associate Administrator for Safety in writing of the technology to be used prior to implementation.

[73 FR 8504, Feb. 13, 2008]

PART 219—CONTROL OF ALCOHOL AND DRUG USE

Subpart A—General

Sec.

219.1 Purpose and scope.
219.3 Application.
219.4 Recognition of a foreign railroad's workplace testing program.
219.5 Definitions.
219.7 Waivers.
219.9 Responsibility for compliance.
219.11 General conditions for chemical tests.

219.13 Preemptive effect.
219.15 [Reserved]
219.17 Construction.
219.19 [Reserved]
219.21 Information collection.
219.23 Railroad policies.

Subpart B—Prohibitions

219.101 Alcohol and drug use prohibited.
219.102 Prohibition on abuse of controlled substances.
219.103 Prescribed and over-the-counter drugs.
219.104 Responsive action.
219.105 Railroad's duty to prevent violations.
219.107 Consequences of unlawful refusal.

Subpart C—Post-Accident Toxicological Testing

219.201 Events for which testing is required.
219.203 Responsibilities of railroads and employees.
219.205 Specimen collection and handling.
219.206 FRA access to breath test results.
219.207 Fatality.
219.209 Reports of tests and refusals.
219.211 Analysis and follow-up.
219.213 Unlawful refusals; consequences.

Subpart D—Testing for Cause

219.300 Mandatory reasonable suspicion testing.
219.301 Testing for reasonable cause.
219.302 Prompt specimen collection; time limitation.

Subpart E—Identification of Troubled Employees

219.401 Requirement for policies.
219.403 Voluntary referral policy.
219.405 Co-worker report policy.
219.407 Alternate policies.

Subpart F—Pre-Employment Tests

219.501 Pre-employment drug testing.
219.502 Pre-employment alcohol testing.
219.503 Notification; records.
219.505 Refusals.

Subpart G—Random Alcohol and Drug Testing Programs

219.601 Railroad random drug testing programs.
219.602 FRA Administrator's determination of random drug testing rate.
219.603 Participation in drug testing.
219.605 Positive drug test results; procedures.
219.607 Railroad random alcohol testing programs.
219.608 FRA Administrator's determination of random alcohol testing rate.
219.609 Participation in alcohol testing.
219.611 Test result indicating prohibited alcohol concentration; procedures.

Subpart H—Drug and Alcohol Testing Procedures

219.701 Standards for drug and alcohol testing.

Subpart I—Annual Report

219.800 Annual reports.
219.801–219.803 [Reserved]

Subpart J—Recordkeeping Requirements

219.901 Retention of alcohol testing records.
219.903 Retention of drug testing records.
219.905 Access to facilities and records.
APPENDIX A TO PART 219—SCHEDULE OF CIVIL PENALTIES
APPENDIX B TO PART 219—DESIGNATION OF LABORATORY FOR POST-ACCIDENT TOXICOLOGICAL TESTING
APPENDIX C TO PART 219—POST-ACCIDENT TESTING SPECIMEN COLLECTION

AUTHORITY: 49 U.S.C. 20103, 20107, 20140, 21301, 21304, 21311; 28 U.S.C. 2461, note; and 49 CFR 1.49(m).

SOURCE: 66 FR 41973, Aug. 9, 2001, unless otherwise noted.

Subpart A—General

§219.1 Purpose and scope.

(a) The purpose of this part is to prevent accidents and casualties in railroad operations that result from impairment of employees by alcohol or drugs.

(b) This part prescribes minimum Federal safety standards for control of alcohol and drug use. This part does not restrict a railroad from adopting and enforcing additional or more stringent requirements not inconsistent with this part.

§219.3 Application.

(a) *General.* Except as provided in paragraphs (b) and (c) of this section, this part applies to—

(1) Railroads that operate rolling equipment on standard gage track which is part of the general railroad system of transportation; and

(2) Railroads that provide commuter or other short-haul rail passenger service in a metropolitan or suburban area

(as described by 49 U.S.C. 20102) in the United States.

(b) *Exceptions available to both domestic and foreign railroads.* (1) This part does not apply to a railroad that operates only on track inside an installation which is not part of the general railroad system of transportation.

(2) Subparts D, E, F and G of this part do not apply to a railroad that—

(i) Has a total of 15 or fewer employees who are covered by the hours of service laws at 49 U.S.C. 21103, 21104, or 21105, or who would be subject to the hours of service laws at 49 U.S.C. 21103, 21104, or 21105 if their services were performed in the United States; and

(ii) Does not operate on the tracks in the United States of another railroad (or otherwise engage in joint operations in the United States with another railroad) except as necessary for purposes of interchange.

(3) Subpart I of this part does not apply to a railroad that has fewer than 400,000 total employee hours, including hours worked by all employees of the railroad, regardless of occupation, not only while in the United States but also while outside the United States. For purposes of this paragraph, the term ''employees of the railroad'' includes individuals who perform service for the railroad, including not only individuals who receive direct monetary compensation from the railroad for performing a service for the railroad, but also such individuals as employees of a contractor to the railroad who perform a service for the railroad.

(c) *Exceptions available to foreign railroads only.* (1) Subparts E, F and G of this part do not apply to train or dispatching service in the United States performed by an employee of a foreign railroad whose primary reporting point is outside the United States, on that portion of a rail line in the United States extending up to10 route miles from the point that the line crosses into the United States from Canada or Mexico.

(2) Unless otherwise provided by paragraph (b) of this section, subparts A, B, C, D, H, I, and J of this part apply to signal service in the United States of a foreign railroad performed by an employee of the foreign railroad if the employee's primary place of reporting is located outside the United States. Subparts E, F, and G of this part do not apply to signal service in the United States of a foreign railroad performed by an employee of the foreign railroad if the employee's primary place of reporting is located outside the United States.

(3) Unless otherwise excepted under paragraph (c)(1) of this section, on and after June 11, 2004, a foreign railroad shall conduct a pre-employment drug test on each of its final applicants for, and each of its employees seeking to transfer for the first time to, duties involving train or dispatching service in the United States while having his or her primary reporting point outside of the United States. The test shall be conducted in accordance with this part prior to the applicant or employee's performance of train or dispatching service in the United States.

[69 FR 19286, Apr. 12, 2004]

§ 219.4 Recognition of a foreign railroad's workplace testing program.

(a) *General.* A foreign railroad may petition the FRA Associate Administrator for Safety for recognition of a workplace testing program promulgated under the laws of its home country as a compatible alternative to the return-to-service requirements in subpart B of this part and the requirements of subparts E, F, and G of this part with respect to its employees whose primary reporting point is outside the United States but who enter the United States to perform train or dispatching service and with respect to its final applicants for, or its employees seeking to transfer for the first time to, duties involving such service.

(1) To be so considered, the petition must document that the foreign railroad's workplace testing program contains equivalents to subparts B, E, F, and G of this part:

(i) Pre-employment drug testing;

(ii) A policy dealing with co-worker and self-reporting of alcohol and drug abuse problems;

(iii) Random drug and alcohol testing;

(iv) Return-to-duty testing; and

(v) Testing procedures and safeguards reasonably comparable in effectiveness to all applicable provisions of the

United States Department of Transportation Procedures for Workplace Drug and Alcohol Testing Programs (part 40 of this title).

(2) In approving a program under this section, the FRA Associate Administrator for Safety may impose conditions deemed necessary.

(b) *Alternative programs.* (1) Upon FRA's recognition of a foreign railroad's workplace testing program as compatible with the return-to-service requirements in subpart B and the requirements of subparts E, F, and G of this part, the foreign railroad must comply with either the enumerated provisions of part 219 or with the standards of the recognized program, and any imposed conditions, with respect to its employees whose primary reporting point is outside the United States and who perform train or dispatching service in the United States. The foreign railroad must also, with respect to its final applicants for, or its employees seeking to transfer for the first time to, duties involving such train or dispatching service in the United States, comply with either subpart E of this part or the standards of the recognized program.

(2) The foreign railroad must comply with subparts A, B (other than the return-to-service provisions in §219.104(d)), C, reasonable suspicion testing in subpart D, and subparts I and J. Drug or alcohol testing required by these subparts must be conducted in compliance with all applicable provisions of the United States Department of Transportation Procedures for Workplace Drug and Alcohol Testing Programs (part 40 of this title).

(c) *Petitions for recognition of a foreign railroad's workplace testing programs.* Each petition for recognition of a foreign workplace testing program shall contain:

(1) The name, title, address, and telephone number of the primary person to be contacted with regard to review of the petition;

(2) The requirements of the foreign railroad workplace testing program to be considered for recognition;

(3) Appropriate data or records, or both, for FRA to consider in determining whether the foreign railroad workplace testing program is equivalent to the minimum standards contained in this part and provides at least an equivalent level of safety.

(d) ***Federal Register*** *notice.* FRA will publish a notice in the FEDERAL REGISTER concerning each petition under paragraph (c) of this section that it receives.

(e) *Comment.* Not later than 30 days from the date of publication of the notice in the FEDERAL REGISTER concerning a petition under paragraph (c) of this section, any person may comment on the petition.

(1) A comment shall set forth specifically the basis upon which it is made, and contain a concise statement of the interest of the commenter in the proceeding.

(2) Any comment on a petition should reference the FRA docket and notice numbers. A commenter may submit a comment and related material by only one of the following methods:

(i) *Web site: http://dms.dot.gov.* Follow the instructions for submitting comments on the DOT electronic docket site.

(ii) *Fax:* 1–202–493–2251.

(iii) *Mail:* Docket Management Facility; U.S. Department of Transportation, 400 Seventh Street, SW., Nassif Building, Room PL–401, Washington, DC 20590–0001.

(iv) *Hand Delivery:* Room PL–401 on the plaza level of the Nassif Building, 400 Seventh Street, SW., Washington, DC, between 9 a.m. and 5 p.m., Monday through Friday, except Federal Holidays.

(v) *Federal eRulemaking Portal:* Go to *http://www.regulations.gov.* Follow the online instructions for submitting comments.

(3) The commenter shall certify that a copy of the comment was served on the petitioner. Note that all petitions received will be posted without change to *http://dms.dot.gov* including any personal information provided.

(f) *Disposition of petitions.* (1) If FRA finds that the petition complies with the requirements of this section and that the foreign railroad's workplace testing program is compatible with the minimum standards of this part, the petition will be granted, normally

within 90 days of its receipt. If the petition is neither granted nor denied within 90 days, the petition remains pending for decision. FRA may attach special conditions to the approval of any petition. Following the approval of a petition, FRA may reopen consideration of the petition for cause.

(2) If FRA finds that the petition does not comply with the requirements of this section or that the foreign railroad's workplace testing program is not compatible with the minimum standards of this part, the petition will be denied, normally within 90 days of its receipt.

(3) When FRA grants or denies a petition, or reopens consideration of the petition, written notice is sent to the petitioner and other interested parties.

(g) *Program recognition*. If its program has been recognized, the foreign railroad shall maintain a letter on file indicating that it has elected to extend specified elements of the recognized program to its operations in the United States. Once granted, program recognition remains valid so long as the program retains these elements and the foreign railroad complies with the program requirements.

[69 FR 19286, Apr. 12, 2004]

§ 219.5 Definitions.

As used in this part—

Accident or incident reportable under part 225 does not include a case that is classified as ''covered data'' under § 225.5 of this chapter (*i.e.*, employee injury/illness cases reportable exclusively because a physician or other licensed health care professional either made a one-time topical application of a prescription-strength medication to the employee's injury or made a written recommendation that the employee: Take one or more days away from work when the employee instead reports to work (or would have reported had he or she been scheduled) and takes no days away from work in connection with the injury or illness; work restricted duty for one or more days when the employee instead works unrestricted (or would have worked unrestricted had he or she been scheduled) and takes no other days of restricted work activity in connection with the injury or illness; or take over-the-counter medication at a dosage equal to or greater than the minimum prescription strength, whether or not the employee actually takes the medication).

Class I, *Class II*, and *Class III* have the meaning assigned by regulations of the Surface Transportation Board (49 CFR part 1201; General Instructions 1–1).

Controlled substance has the meaning assigned by 21 U.S.C. 802, and includes all substances listed on Schedules I through V as they may be revised from time to time (21 CFR Parts 1301–1316).

Covered employee means a person who has been assigned to perform service in the United States subject to the hours of service laws (49 U.S.C. ch. 211) during a duty tour, whether or not the person has performed or is currently performing such service, and any person who performs such service. (An employee is not ''covered'' within the meaning of this part exclusively by reason of being an employee for purposes of 49 U.S.C. 21106.) For the purposes of pre-employment testing only, the term ''covered employee'' includes a person applying to perform covered service in the United States.

Covered service means service in the United States that is subject to the hours of service laws at 49 U.S.C. 21103, 21104, or 21105, but does not include any period the employee is relieved of all responsibilities and is free to come and go without restriction.

Co-worker means another employee of the railroad, including a working supervisor directly associated with a yard or train crew, such as a conductor or yard foreman, but not including any other railroad supervisor, special agent, or officer.

Cross-border operation means a rail operation that crosses into the United States from Canada or Mexico.

Domestic railroad means a railroad that is incorporated in the United States.

DOT Agency means an agency (or ''operating administration'') of the United States Department of Transportation administering regulations requiring alcohol or controlled substance testing (14 CFR parts 61, 63, 65, 121 and 135; 49 CFR parts 199, 219, 382 and 655) in accordance with Part 40 of this title.

Drug means any substance (other than alcohol) that has known mind- or function-altering effects on a human subject, specifically including any psychoactive substance and including, but not limited to, controlled substances.

Foreign railroad means a railroad that is incorporated outside the United States.

FRA means the Federal Railroad Administration, United States Department of Transportation.

FRA representative means the Associate Administrator for Safety of FRA, the Associate Administrator's delegate (including a qualified State inspector acting under Part 212 of this chapter), the Chief Counsel of FRA, or the Chief Counsel's delegate.

General railroad system of transportation means the general railroad system of transportation in the United States.

Hazardous material means a commodity designated as a hazardous material by Part 172 of this title.

Impact accident means a train accident (i.e., a rail equipment accident involving damage in excess of the current reporting threshold (see §225.19(e) of this chapter)) consisting of a head-on collision, a rear-end collision, a side collision (including a collision at a railroad crossing at grade), a switching collision, or impact with a deliberately-placed obstruction such as a bumping post. The following are not impact accidents:

(1) An accident in which the derailment of equipment causes an impact with other rail equipment;

(2) Impact of rail equipment with obstructions such as fallen trees, rock or snow slides, livestock, etc.; and

(3) Raking collisions caused by derailment of rolling stock or operation of equipment in violation of clearance limitations.

Independent with respect to a medical facility, means not under the ownership or control of the railroad and not operated or staffed by a salaried officer or employee of the railroad. The fact that the railroad pays for services rendered by a medical facility or laboratory, selects that entity for performing tests under this part, or has a standing contractual relationship with that entity to perform tests under this part or perform other medical examinations or tests of railroad employees does not, by itself, remove the facility from this definition.

Medical facility means a hospital, clinic, physician's office, or laboratory where toxicological specimens can be collected according to recognized professional standards.

Medical practitioner means a physician or dentist licensed or otherwise authorized to practice by the state.

NTSB means the National Transportation Safety Board.

Passenger train means a train transporting persons (other than employees, contractors, or persons riding equipment to observe or monitor railroad operations) in intercity passenger service, commuter or other short-haul service, or for excursion or recreational purposes.

Positive rate for random drug testing means the number of verified positive results for random drug tests conducted under this part plus the number of refusals of random drug tests required by this part, divided by the total number of random drug tests results (*i.e.*, positives, negatives, and refusals) under this part.

Possess means to have on one's person or in one's personal effects or under one's control. However, the concept of possession as used in this part does not include control by virtue of presence in the employee's personal residence or other similar location off of railroad property.

Railroad means any form of nonhighway ground transportation that runs on rails or electromagnetic guideways, and any person providing such transportation, including—

(1) Commuter or other short-haul railroad passenger service in a metropolitan or suburban area and commuter railroad service that was operated by the Consolidated Rail Corporation on January 1, 1979; and

(2) High speed ground transportation systems that connect metropolitan areas, without regard to whether those systems use new technologies not associated with traditional railroads; but does not include rapid transit operations in an urban area that are not

connected to the general railroad system of transportation.

Railroad property damage or *damage to railroad property* refers to damage to railroad property, including railroad on-track equipment, signals, track, track structures (including bridges and tunnels), or roadbed, including labor costs and all other costs for repair or replacement in kind. Estimated cost for replacement of railroad property must be calculated as described in the FRA Guide for Preparing Accident/Incident Reports. (See § 225.21 of this chapter.) However, replacement of passenger equipment is calculated based on the cost of acquiring a new unit for comparable service.

Reportable injury means an injury reportable under part 225 of this chapter except for an injury that is classified as ''covered data'' under § 225.5 of this chapter (*i.e.*, employee injury/illness cases reportable exclusively because a physician or other licensed health care professional either made a one-time topical application of a prescription-strength medication to the employee's injury or made a written recommendation that the employee: Take one or more days away from work when the employee instead reports to work (or would have reported had he or she been scheduled) and takes no days away from work in connection with the injury or illness; work restricted duty for one or more days when the employee instead works unrestricted (or would have worked unrestricted had he or she been scheduled) and takes no other days of restricted work activity in connection with the injury or illness; or take over-the-counter medication at a dosage equal to or greater than the minimum prescription strength, whether or not the employee actually takes the medication.

Reporting threshold means the amount specified in § 225.19(e) of this chapter, as adjusted from time to time in accordance with Appendix B to Part 225 of this chapter.

State means a State of the United States of America or the District of Columbia.

Supervisory employee means an officer, special agent, or other employee of the railroad who is not a co-worker and who is responsible for supervising or monitoring the conduct or performance of one or more employees.

Train, except as context requires, means a locomotive, or more than one locomotive coupled, with or without cars. (A locomotive is a self-propelled unit of equipment which can be used in train service.)

Train accident means a passenger, freight, or work train accident described in § 225.19(c) of this chapter (a ''rail equipment accident'' involving damage in excess of the current reporting threshold), including an accident involving a switching movement.

Train incident means an event involving the movement of railroad on-track equipment that results in a casualty but in which railroad property damage does not exceed the reporting threshold.

United States means all of the States.

Violation rate for random alcohol testing means the number of 0.04 and above random alcohol confirmation test results conducted under this part plus the number of refusals of random alcohol tests required by this part, divided by the total number of random alcohol screening tests (including refusals) conducted under this part.

[66 FR 41973, Aug. 9, 2001, as amended at 68 FR 10135, Mar. 3, 2003; 68 FR 75463, Dec. 31, 2003; 69 FR 19287, Apr. 12, 2004]

§ 219.7 Waivers.

(a) A person subject to a requirement of this part may petition the FRA for a waiver of compliance with such requirement.

(b) Each petition for waiver under this section must be filed in a manner and contain the information required by Part 211 of this chapter. A petition for waiver of the Part 40 prohibition against stand down of an employee before the Medical Review Officer has completed the verification must also comply with § 40.21 of this title.

(c) If the FRA Administrator finds that waiver of compliance is in the public interest and is consistent with railroad safety, the Administrator may grant the waiver subject to any necessary conditions.

(d) *Special dispensation for employees performing train or dispatching service on existing cross-border operations.* If a foreign railroad requests a waiver not

later than August 10, 2004, for an existing cross-border operation, subparts E, F, and G of this part shall not apply to train or dispatching service on that operation in the United States performed by an employee of a foreign railroad whose primary reporting point is outside the United States, until the railroad's waiver request is acted upon by FRA.

(e) *Waiver requests for employees performing train or dispatching service on new or expanded cross-border operations.* A foreign railroad seeking a waiver from subparts E, F, and G of this part for its employees performing train or dispatching service on a new cross-border operation that proceeds more than 10 route miles into the United States, or a formerly excepted cross-border operation that expands beyond the 10 mile limited haul exception in paragraph (d) of this section, must file a petition not later than 90 days before commencing the subject operation. FRA will attempt to decide on such petitions within 90 days. If no action is taken on the petition within 90 days, the petition remains pending for decision and the cross-border crew assignments on the operation covered by the petition will be subject to subparts E, F, and G until FRA grants the petition should the petitioner commence the proposed operation.

[66 FR 41973, Aug. 9, 2001, as amended at 69 FR 19287, Apr. 12, 2004]

§219.9 Responsibility for compliance.

(a) Any person (an entity of any type covered under 1 U.S.C. 1, including but not limited to the following: A railroad; a manager, supervisor, official, or other employee or agent of a railroad; any owner, manufacturer, lessor, or lessee of railroad equipment, track, or facilities; any independent contractor providing goods or services to a railroad; and any employee of such owner, manufacturer, lessor, lessee, or independent contractor) who violates any requirement of this part or causes the violation of any such requirement is subject to a civil penalty of at least $550 and not more than $16,000 per violation, except that: Penalties may be assessed against individuals only for willful violations; where a grossly negligent violation or a pattern of repeated violations has created an imminent hazard of death or injury, or has caused death or injury, a penalty not to exceed $27,000 per violation may be assessed; and the standard of liability for a railroad will vary depending upon the requirement involved. See, e.g., §219.105, which must be construed to qualify the responsibility of a railroad for the unauthorized conduct of an employee that violates §219.101 or §219.102 (while imposing a duty of due diligence to prevent such conduct). Each day a violation continues constitutes a separate offense. See Appendix A to this part for a statement of agency civil penalty policy.

(b)(1) In the case of joint operations, primary responsibility for compliance with this part with respect to determination of events qualifying for breath or body fluid testing under Subparts C and D of this part rests with the host railroad, and all affected employees must be responsive to direction from the host railroad consistent with this part. However, nothing in this paragraph (b)(1) restricts the ability of the railroads to provide for an appropriate assignment of responsibility for compliance with this part as among those railroads through a joint operating agreement or other binding contract. FRA reserves the right to bring an enforcement action for noncompliance with applicable portions of this part against the host railroad, the employing railroad, or both.

(2) Where an employee of one railroad is required to participate in breath or body fluid testing under Subpart C or D of this part and is subsequently subject to adverse action alleged to have arisen out of the required test (or alleged refusal thereof), necessary witnesses and documents available to the other railroad must be made available to the employee on a reasonable basis.

(c) Any independent contractor or other entity that performs covered service for a railroad has the same responsibilities as a railroad under this part, with respect to its employees who perform covered service. The entity's responsibility for compliance with this part may be fulfilled either directly by that entity or by the railroad's treating the entity's employees who perform covered service as if they were its own

employees for purposes of this part. The responsibility for compliance must be clearly spelled out in the contract between the railroad and the other entity or in another document. In the absence of such a clear delineation of responsibility, FRA will hold the railroad and the other entity jointly and severally liable for compliance.

[66 FR 41973, Aug. 9, 2001, as amended at 69 FR 30593, May 28, 2004; 72 FR 51196, Sept. 6, 2007]

§ 219.11 General conditions for chemical tests.

(a) Any employee who performs covered service for a railroad is deemed to have consented to testing as required in subparts B, C, D, and G of this part; and consent is implied by performance of such service.

(b)(1) Each such employee must participate in such testing, as required under the conditions set forth in this part by a representative of the railroad.

(2) In any case where an employee has sustained a personal injury and is subject to alcohol or drug testing under this part, necessary medical treatment must be accorded priority over provision of the breath or body fluid specimen(s).

(3) Failure to remain available following an accident or casualty as required by company rules (i.e., being absent without leave) is considered a refusal to participate in testing, without regard to any subsequent provision of specimens.

(c) A covered employee who is required to be tested under subpart C or D of this part and who is taken to a medical facility for observation or treatment after an accident or incident is deemed to have consented to the release to FRA of the following:

(1) The remaining portion of any body fluid specimen taken by the treating facility within 12 hours of the accident or incident that is not required for medical purposes, together with any normal medical facility record(s) pertaining to the taking of such specimen;

(2) The results of any laboratory tests for alcohol or any drug conducted by or for the treating facility on such specimen;

(3) The identity, dosage, and time of administration of any drugs administered by the treating facility prior to the time specimens were taken by the treating facility or prior to the time specimens were taken in compliance with this part; and

(4) The results of any breath tests for alcohol conducted by or for the treating facility.

(d) An employee required to participate in body fluid testing under subpart C of this part (post-accident toxicological testing) or testing subject to subpart H of this part shall, if requested by the representative of the railroad or the medical facility (including, under subpart H of this part, a non-medical contract collector), evidence consent to taking of specimens, their release for toxicological analysis under pertinent provisions of this part, and release of the test results to the railroad's Medical Review Officer by promptly executing a consent form, if required by the medical facility. The employee is not required to execute any document or clause waiving rights that the employee would otherwise have against the employer, and any such waiver is void. The employee may not be required to waive liability with respect to negligence on the part of any person participating in the collection, handling or analysis of the specimen or to indemnify any person for the negligence of others. Any consent provided consistent with this section may be construed to extend only to those actions specified in this section.

(e) Nothing in this part may be construed to authorize the use of physical coercion or any other deprivation of liberty in order to compel breath or body fluid testing.

(f) Any railroad employee who performs service for a railroad is deemed to have consented to removal of body fluid and/or tissue specimens necessary for toxicological analysis from the remains of such employee, if such employee dies within 12 hours of an accident or incident described in subpart C of this part as a result of such event. This consent is specifically required of employees not in covered service, as well as employees in covered service.

(g) Each supervisor responsible for covered employees (except a working

supervisor within the definition of coworker under this part) must be trained in the signs and symptoms of alcohol and drug influence, intoxication and misuse consistent with a program of instruction to be made available for inspection upon demand by FRA. Such a program shall, at a minimum, provide information concerning the acute behavioral and apparent physiological effects of alcohol and the major drug groups on the controlled substances list. The program must also provide training on the qualifying criteria for post-accident testing contained in subpart C of this part, and the role of the supervisor in post-accident collections described in subpart C and Appendix C of this part. The duration of such training may not be less than 3 hours.

(h) Nothing in this subpart restricts any discretion available to the railroad to request or require that an employee cooperate in additional body fluid testing. However, no such testing may be performed on urine or blood specimens provided under this part. For purposes of this paragraph (h), all urine from a void constitutes a single specimen.

(i) A railroad required or authorized to conduct testing under this part may conduct all such testing in the United States. A foreign railroad required to conduct testing under this part may conduct such tests in its home country, provided that it otherwise complies with the requirements of this part.

[66 FR 41973, Aug. 9, 2001, as amended at 69 FR 19288, Apr. 12, 2004]

§ 219.13 Preemptive effect.

(a) Under section 20106 of title 49, United States Code, issuance of the regulations in this part preempts any State law, rule, regulation, order or standard covering the same subject matter, except a provision directed at a local hazard that is consistent with this part and that does not impose an undue burden on interstate commerce.

(b) FRA does not intend by issuance of the regulations in this part to preempt provisions of State criminal law that impose sanctions for reckless conduct that leads to actual loss of life, injury or damage to property, whether such provisions apply specifically to railroad employees or generally to the public at large.

§ 219.15 [Reserved]

§ 219.17 Construction.

Nothing in this part—

(a) Restricts the power of FRA to conduct investigations under sections 20107, 20108, 20111, and 20112 of title 49, United States Code; or

(b) Creates a private right of action on the part of any person for enforcement of the provisions of this part or for damages resulting from noncompliance with this part.

§ 219.19 [Reserved]

§ 219.21 Information collection.

(a) The information collection requirements of this part have been reviewed by the Office of Management and Budget pursuant to the Paperwork Reduction Act of 1980 (44 U.S.C. 3501 *et seq.*) and have been assigned OMB control number 2130–0526.

(b) The information collection requirements are found in the following sections: 219.7, 219.23, 219.104, 219.201, 219.203, 219.205, 219.207, 219.209, 219.211, 219.213, 219.303, 219.401, 219.403, 219.405, 219.407, 219.501, 219.502, 219.503, 219.601, 219.605, 219.701, 219.801, 219.803, 219.901, and 219.903.

§ 219.23 Railroad policies.

(a) Whenever a breath or body fluid test is required of an employee under this part, the railroad must provide clear and unequivocal written notice to the employee that the test is being required under FRA regulations. Use of the mandated DOT form for drug or alcohol testing satisfies the requirements of this paragraph (a).

(b) Whenever a breath or body fluid test is required of an employee under this part, the railroad must provide clear, unequivocal written notice of the basis or bases upon which the test is required (e.g., reasonable suspicion, violation of a specified operating/safety rule enumerated in subpart D of this part, random selection, follow-up, etc.). Completion of the DOT alcohol or drug testing form indicating the basis of the test (prior to providing a copy to the employee) satisfies the requirement of

this paragraph (b). Use of the DOT form for non-Federal tests is prohibited.

(c) Use of approved forms for mandatory post-accident toxicological testing under subpart C of this part provides the notifications required under this section with respect to such tests. Use of those forms for any other test is prohibited.

(d) Each railroad must provide educational materials that explain the requirements of this part, and the railroad's policies and procedures with respect to meeting those requirements.

(1) The railroad must ensure that a copy of these materials is distributed to each covered employee prior to the start of alcohol testing under the railroad's alcohol misuse prevention program and to each person subsequently hired for or transferred to a covered position.

(2) Each railroad must provide written notice to representatives of employee organizations of the availability of this information.

(e) *Required content.* The materials to be made available to employees must include detailed discussion of at least the following:

(1) The identity of the person designated by the railroad to answer employee questions about the materials.

(2) The classes or crafts of employees who are subject to the provisions of this part.

(3) Sufficient information about the safety-sensitive functions performed by those employees to make clear that the period of the work day the covered employee is required to be in compliance with this part is that period when the employee is on duty and is required to perform or is available to perform covered service.

(4) Specific information concerning employee conduct that is prohibited under subpart B of this part.

(5) In the case of a railroad utilizing the accident/incident and rule violation reasonable cause testing authority provided by this part, prior notice (which may be combined with the notice required by §§ 219.601(d)(1) and 219.607(d)(1)), to covered employees of the circumstances under which they will be subject to testing.

(6) The circumstances under which a covered employee will be tested under this part.

(7) The procedures that will be used to test for the presence of alcohol and controlled substances, protect the employee and the integrity of the testing processes, safeguard the validity of the test results, and ensure that those results are attributed to the correct employee.

(8) The requirement that a covered employee submit to alcohol and drug tests administered in accordance with this part.

(9) An explanation of what constitutes a refusal to submit to an alcohol or drug test and the attendant consequences.

(10) The consequences for covered employees found to have violated Subpart B of this part, including the requirement that the employee be removed immediately from covered service, and the procedures under § 219.104.

(11) The consequences for covered employees found to have an alcohol concentration of .02 or greater but less than .04.

(12) Information concerning the effects of alcohol misuse on an individual's health, work, and personal life; signs and symptoms of an alcohol problem (the employee's or a coworker's); and available methods of evaluating and resolving problems associated with the misuse of alcohol, including utilization of the procedures set forth in subpart E of this part and the names, addresses, and telephone numbers of substance abuse professionals and counseling and treatment programs.

(f) *Optional provisions.* The materials supplied to employees may also include information on additional railroad policies with respect to the use or possession of alcohol and drugs, including any consequences for an employee found to have a specific alcohol concentration, that are based on the railroad's authority independent of this part. Any such additional policies or consequences must be clearly and obviously described as being based on independent authority.

Subpart B—Prohibitions

§219.101 Alcohol and drug use prohibited.

(a) *Prohibitions.* Except as provided in §219.103—

(1) No employee may use or possess alcohol or any controlled substance while assigned by a railroad to perform covered service.

(2) No employee may report for covered service, or go or remain on duty in covered service while—

(i) Under the influence of or impaired by alcohol;

(ii) Having .04 or more alcohol concentration in the breath or blood; or

(iii) Under the influence of or impaired by any controlled substance.

(3) No employee may use alcohol for whichever is the lesser of the following periods:

(i) Within four hours of reporting for covered service; or

(ii) After receiving notice to report for covered service.

(4) No employee tested under the provisions of this part whose test result indicates an alcohol concentration of .02 or greater but less than .04 may perform or continue to perform covered service functions for a railroad, nor may a railroad permit the employee to perform or continue to perform covered service, until the start of the employee's next regularly scheduled duty period, but not less than eight hours following administration of the test.

(5) If an employee tested under the provisions of this part has a test result indicating an alcohol concentration below 0.02, the test must be considered negative and is not evidence of alcohol misuse. A railroad may not use a federal test result below 0.02 either as evidence in a company proceeding or as a basis for subsequent testing under company authority. A railroad may take further action to compel cooperation in other breath or body fluid testing only if it has an independent basis for doing so.

(b) *Controlled substance.* ''Controlled substance'' is defined by §219.5. Controlled substances are grouped as follows: marijuana, narcotics (such as heroin and codeine), stimulants (such as cocaine and amphetamines), depressants (such as barbiturates and minor tranquilizers), and hallucinogens (such as the drugs known as PCP and LSD). Controlled substances include illicit drugs (Schedule I), drugs that are required to be distributed only by a medical practitioner's prescription or other authorization (Schedules II through IV, and some drugs on Schedule V), and certain preparations for which distribution is through documented over the counter sales (Schedule V only).

(c) *Railroad rules.* Nothing in this section restricts a railroad from imposing an absolute prohibition on the presence of alcohol or any drug in the body fluids of persons in its employ, whether in furtherance of the purpose of this part or for other purposes.

(d) *Construction.* This section may not be construed to prohibit the presence of an unopened container of an alcoholic beverage in a private motor vehicle that is not subject to use in the business of the railroad; nor may it be construed to restrict a railroad from prohibiting such presence under its own rules.

§219.102 Prohibition on abuse of controlled substances.

No employee who performs covered service may use a controlled substance at any time, whether on duty or off duty, except as permitted by §219.103.

§219.103 Prescribed and over-the-counter drugs.

(a) This subpart does not prohibit the use of a controlled substance (on Schedules II through V of the controlled substance list) prescribed or authorized by a medical practitioner, or possession incident to such use, if—

(1) The treating medical practitioner or a physician designated by the railroad has made a good faith judgment, with notice of the employee's assigned duties and on the basis of the available medical history, that use of the substance by the employee at the prescribed or authorized dosage level is consistent with the safe performance of the employee's duties;

(2) The substance is used at the dosage prescribed or authorized; and

(3) In the event the employee is being treated by more than one medical practitioner, at least one treating medical practitioner has been informed of all

medications authorized or prescribed and has determined that use of the medications is consistent with the safe performance of the employee's duties (and the employee has observed any restrictions imposed with respect to use of the medications in combination).

(b) This subpart does not restrict any discretion available to the railroad to require that employees notify the railroad of therapeutic drug use or obtain prior approval for such use.

§ 219.104 Responsive action.

(a) *Removal from covered service.* (1) If the railroad determines that an employee has violated § 219.101 or § 219.102, or the alcohol or controlled substances misuse rule of another DOT agency, the railroad must immediately remove the employee from covered service and the procedures described in paragraphs (b) through (e) of this section apply.

(2) If an employee refuses to provide breath or a body fluid specimen or specimens when required to by the railroad under a mandatory provision of this part, the railroad must immediately remove the employee from covered service, and the procedures described in paragraphs (b) through (e) of this section apply.

(3)(i) This section does not apply to actions based on breath or body fluid tests for alcohol or drugs that are conducted exclusively under authority other than that provided in this part (e.g., testing under a company medical policy, for-cause testing policy wholly independent of subpart D of this part, or testing under a labor agreement).

(ii) This section and the information requirements listed in § 219.23 do not apply to applicants who refuse to submit to a pre-employment test or who have a pre-employment test with a result indicating the misuse of alcohol or controlled substances.

(b) *Notice.* Prior to or upon withdrawing the employee from covered service under this section, the railroad must provide notice to the employee of the reason for this action.

(c) *Hearing procedures.* (1) If the employee denies that the test result is valid evidence of alcohol or drug use prohibited by this subpart, the employee may demand and must be provided an opportunity for a prompt post-suspension hearing before a presiding officer other than the charging official. This hearing may be consolidated with any disciplinary hearing arising from the same accident or incident (or conduct directly related thereto), but the presiding officer must make separate findings as to compliance with §§ 219.101 and 219.102.

(2) The hearing must be convened within the period specified in the applicable collective bargaining agreement. In the absence of an agreement provision, the employee may demand that the hearing be convened within 10 calendar days of the suspension or, in the case of an employee who is unavailable due to injury, illness, or other sufficient cause, within 10 days of the date the employee becomes available for hearing.

(3) A post-suspension proceeding conforming to the requirements of an applicable collective bargaining agreement, together with the provisions for adjustment of disputes under sec. 3 of the Railway Labor Act (49 U.S.C. 153), satisfies the procedural requirements of this paragraph (c).

(4) Nothing in this part may be deemed to abridge any additional procedural rights or remedies not inconsistent with this part that are available to the employee under a collective bargaining agreement, the Railway Labor Act, or (with respect to employment at will) at common law with respect to the removal or other adverse action taken as a consequence of a positive test result in a test authorized or required by this part.

(5) Nothing in this part restricts the discretion of the railroad to treat an employee's denial of prohibited alcohol or drug use as a waiver of any privilege the employee would otherwise enjoy to have such prohibited alcohol or drug use treated as a non-disciplinary matter or to have discipline held in abeyance.

(d) The railroad must comply with the return-to-service and follow-up testing requirements, and the Substance Abuse Professional conflict-of-interest prohibitions, contained in §§ 40.305, 40.307, and 40.299 of this title, respectively.

§ 219.105 Railroad's duty to prevent violations.

(a) A railroad may not, with actual knowledge, permit an employee to go or remain on duty in covered service in violation of the prohibitions of § 219.101 or § 219.102. As used in this section, the knowledge imputed to the railroad must be limited to that of a railroad management employee (such as a supervisor deemed an ''officer,'' whether or not such person is a corporate officer) or a supervisory employee in the offending employee's chain of command.

(b) A railroad must exercise due diligence to assure compliance with §§ 219.101 and 219.102 by each covered employee.

§ 219.107 Consequences of unlawful refusal.

(a) An employee who refuses to provide breath or a body fluid specimen or specimens when required to by the railroad under a mandatory provision of this part must be deemed disqualified for a period of nine (9) months.

(b) Prior to or upon withdrawing the employee from covered service under this section, the railroad must provide notice of the reason for this action, and the procedures described in § 219.104(c) apply.

(c) The disqualification required by this section applies with respect to employment in covered service by any railroad with notice of such disqualification.

(d) The requirement of disqualification for nine (9) months does not limit any discretion on the part of the railroad to impose additional sanctions for the same or related conduct.

(e) Upon the expiration of the 9-month period described in this section, a railroad may permit the employee to return to covered service only under the same conditions specified in § 219.104(d), and the employee must be subject to follow-up tests, as provided by that section.

Subpart C—Post-Accident Toxicological Testing

§ 219.201 Events for which testing is required.

(a) *List of events.* Except as provided in paragraph (b) of this section, post-accident toxicological tests must be conducted after any event that involves one or more of the circumstances described in paragraphs (a)(1) through (4) of this section:

(1) *Major train accident.* Any train accident (i.e., a rail equipment accident involving damage in excess of the current reporting threshold) that involves one or more of the following:

(i) A fatality;

(ii) A release of hazardous material lading from railroad equipment accompanied by—

(A) An evacuation; or

(B) A reportable injury resulting from the hazardous material release (e.g., from fire, explosion, inhalation, or skin contact with the material); or

(iii) Damage to railroad property of $1,000,000 or more.

(2) *Impact accident.* An impact accident (i.e., a rail equipment accident defined as an ''impact accident'' in § 219.5) that involves damage in excess of the current reporting threshold, resulting in—

(i) A reportable injury; or

(ii) Damage to railroad property of $150,000 or more.

(3) *Fatal train incident.* Any train incident that involves a fatality to any on-duty railroad employee.

(4) *Passenger train accident.* Reportable injury to any person in a train accident (i.e., a rail equipment accident involving damage in excess of the current reporting threshold) involving a passenger train.

(b) *Exceptions.* No test may be required in the case of a collision between railroad rolling stock and a motor vehicle or other highway conveyance at a rail/highway grade crossing. No test may be required in the case of an accident/incident the cause and severity of which are wholly attributable to a natural cause (e.g., flood, tornado, or other natural disaster) or to vandalism or trespasser(s), as determined on the basis of objective

and documented facts by the railroad representative responding to the scene.

(c) *Good faith determinations.* (1)(i) The railroad representative responding to the scene of the accident/incident must determine whether the accident/incident falls within the requirements of paragraph (a) of this section or is within the exception described in paragraph (b) of this section. It is the duty of the railroad representative to make reasonable inquiry into the facts as necessary to make such determinations. In making such inquiry, the railroad representative must consider the need to obtain specimens as soon as practical in order to determine the presence or absence of impairing substances reasonably contemporaneous with the accident/incident. The railroad representative satisfies the requirement of this section if, after making reasonable inquiry, the representative exercises good faith judgement in making the required determinations.

(ii) The railroad representative making the determinations required by this section may not be a person directly involved in the accident/incident. This section does not prohibit consultation between the responding railroad representative and higher level railroad officials; however, the responding railroad representative must make the factual determinations required by this section.

(iii) Upon specific request made to the railroad by the Associate Administrator for Safety, FRA (or the Associate Administrator's delegate), the railroad must provide a report describing any decision by a person other than the responding railroad representative with respect to whether an accident/incident qualifies for testing. This report must be affirmed by the decision maker and must be provided to FRA within 72 hours of the request. The report must include the facts reported by the responding railroad representative, the basis upon which the testing decision was made, and the person making the decision.

(iv) Any estimates of railroad property damage made by persons not at the scene must be based on descriptions of specific physical damage provided by the on-scene railroad representative.

(v) In the case of an accident involving passenger equipment, a host railroad may rely upon the damage estimates provided by the passenger railroad (whether present on scene or not) in making the decision whether testing is required, subject to the same requirement that visible physical damage be specifically described.

(2) A railroad must not require an employee to provide blood or urine specimens under the authority or procedures of this subject unless the railroad has made the determinations required by this section, based upon reasonable inquiry and good faith judgment. A railroad does not act in excess of its authority under this subpart if its representative has made such reasonable inquiry and exercised such good faith judgment, but it is later determined, after investigation, that one or more of the conditions thought to have required testing were not, in fact, present. However, this section does not excuse the railroad for any error arising from a mistake of law (e.g., application of testing criteria other than those contained in this part).

(3) A railroad is not in violation of this subpart if its representative has made such reasonable inquiry and exercised such good faith judgment but nevertheless errs in determining that post-accident testing is not required.

(4) An accident/incident with respect to which the railroad has made reasonable inquiry and exercised good faith judgment in determining the facts necessary to apply the criteria contained in paragraph (a) of this section is deemed a qualifying event for purposes of specimen analysis, reporting, and other purposes.

(5) In the event specimens are collected following an event determined by FRA not to be a qualifying event within the meaning of this section, FRA directs its designated laboratory to destroy any specimen material submitted and to refrain from disclosing to any person the results of any analysis conducted.

§ 219.203 Responsibilities of railroads and employees.

(a) *Employees tested.* (1)(i) Following each accident and incident described in § 219.201, the railroad (or railroads)

must take all practicable steps to assure that all covered employees of the railroad directly involved in the accident or incident provide blood and urine specimens for toxicological testing by FRA. Such employees must cooperate in the provision of specimens as described in this part and Appendix C to this part.

(ii) If the conditions for mandatory toxicological testing exist, the railroad may also require employees to provide breath for testing in accordance with the procedures set forth in part 40 of this title and in this part, if such testing does not interfere with timely collection of required specimens.

(2) Such employees must specifically include each and every operating employee assigned as a crew member of any train involved in the accident or incident. In any case where an operator, dispatcher, signal maintainer or other covered employee is directly and contemporaneously involved in the circumstances of the accident/incident, those employees must also be required to provide specimens.

(3) An employee must be excluded from testing under the following circumstances: In any case of an accident/incident for which testing is mandated only under § 219.201(a)(2) (an ''impact accident''), § 219.201(a)(3) (''fatal train incident''), or § 219.201(a)(4) (a ''passenger train accident with injury'') if the railroad representative can immediately determine, on the basis of specific information, that the employee had no role in the cause(s) or severity of the accident/incident. The railroad representative must consider any such information immediately available at the time the qualifying event determination is made under § 219.201.

(4) The following provisions govern accidents/incidents involving non-covered employees:

(i) Surviving non-covered employees are not subject to testing under this subpart.

(ii) Testing of the remains of non-covered employees who are fatally injured in train accidents and incidents is required.

(b) *Timely specimen collection.* (1) The railroad must make every reasonable effort to assure that specimens are provided as soon as possible after the accident or incident.

(2) This paragraph (b) must not be construed to inhibit the employees required to be tested from performing, in the immediate aftermath of the accident or incident, any duties that may be necessary for the preservation of life or property. However, where practical, the railroad must utilize other employees to perform such duties.

(3) In the case of a passenger train which is in proper condition to continue to the next station or its destination after an accident or incident, the railroad must consider the safety and convenience of passengers in determining whether the crew is immediately available for testing. A relief crew must be called to relieve the train crew as soon as possible.

(4) Covered employees who may be subject to testing under this subpart must be retained in duty status for the period necessary to make the determinations required by § 219.201 and this section and (as appropriate) to complete the specimen collection procedure. An employee may not be recalled for testing under this subpart if that employee has been released from duty under the normal procedures of the railroad, except that an employee may be immediately recalled for testing if—

(i) The employee could not be retained in duty status because the employee went off duty under normal carrier procedures prior to being contacted by a railroad supervisor and instructed to remain on duty pending completion of the required determinations (e.g., in the case of a dispatcher or signal maintainer remote from the scene of an accident who was unaware of the occurrence at the time the employee went off duty);

(ii) The railroad's preliminary investigation (contemporaneous with the determination required by § 219.201) indicates a clear probability that the employee played a major role in the cause or severity of the accident/incident; and

(iii) The accident/incident actually occurred during the employee's duty tour. An employee who has been transported to receive medical care is not released from duty for purposes of this

section. Nothing in this section prohibits the subsequent testing of an employee who has failed to remain available for testing as required (i.e., who is absent without leave); but subsequent testing does not excuse such refusal by the employee timely to provide the required specimens.

(c) *Place of specimen collection.* (1) Employees must be transported to an independent medical facility where the specimens must be obtained. The railroad must pre-designate for such testing one or more such facilities in reasonable proximity to any location where the railroad conducts operations. Designation must be made on the basis of the willingness of the facility to conduct specimen collection and the ability of the facility to complete specimen collection promptly, professionally, and in accordance with pertinent requirements of this part. In all cases blood may be drawn only by a qualified medical professional or by a qualified technician subject to the supervision of a qualified medical professional.

(2) In the case of an injured employee, the railroad must request the treating medical facility to obtain the specimens.

(d) *Obtaining cooperation of facility.* (1) In seeking the cooperation of a medical facility in obtaining a specimen under this subpart, the railroad shall, as necessary, make specific reference to the requirements of this subpart.

(2) If an injured employee is unconscious or otherwise unable to evidence consent to the procedure and the treating medical facility declines to obtain blood specimens after having been acquainted with the requirements of this subpart, the railroad must immediately notify the duty officer at the National Response Center (NRC) at (800) 424–8801 or (800) 424–8802, stating the employee's name, the medical facility, its location, the name of the appropriate decisional authority at the medical facility, and the telephone number at which that person can be reached. FRA will then take appropriate measures to assist in obtaining the required specimen.

(e) *Discretion of physician.* Nothing in this subpart may be construed to limit the discretion of a physician to determine whether drawing a blood specimen is consistent with the health of an injured employee or an employee afflicted by any other condition that may preclude drawing the specified quantity of blood.

§ 219.205 Specimen collection and handling.

(a) *General.* Urine and blood specimens must be obtained, marked, preserved, handled, and made available to FRA consistent with the requirements of this subpart, and the technical specifications set forth in Appendix C to this part.

(b) *Information requirements.* In order to process specimens, analyze the significance of laboratory findings, and notify the railroads and employees of test results, it is necessary to obtain basic information concerning the accident/incident and any treatment administered after the accident/incident. Accordingly, the railroad representative must complete the information required by Form FRA 6180.73 (revised) for shipping with the specimens. Each employee subject to testing must cooperate in completion of the required information on Form FRA F 6180.74 (revised) for inclusion in the shipping kit and processing of the specimens. The railroad representative must request an appropriate representative of the medical facility to complete the remaining portion of the information on each Form 6180.74. One Form 6180.73 must be forwarded in the shipping kit with each group of specimens. One Form 6180.74 must be forwarded in the shipping kit for each employee who provides specimens. Forms 6180.73 and 6180.74 may be ordered from the laboratory specified in Appendix B to this part; the forms are also provided to railroads free of charge in the shipping kit. (See paragraph (c) of this section.)

(c) *Shipping kit.* (1) FRA and the laboratory designated in Appendix B to this part make available for purchase a limited number of standard shipping kits for the purpose of routine handling of toxicological specimens under this subpart. Whenever possible, specimens must be placed in the shipping kit prepared for shipment according to the instructions provided in the kit and Appendix C to this part.

(2) Kits may be ordered directly from the laboratory designated in Appendix B to this part.

(3) FRA maintains a limited number of kits at its field offices. A Class III railroad may utilize kits in FRA's possession, rather than maintaining such kits on its property.

(d) *Shipment*. Specimens must be shipped as soon as possible by pre-paid air express or air freight (or other means adequate to ensure delivery within twenty-four (24) hours from time of shipment) to the laboratory designated in Appendix B to this part. Where express courier pickup is available, the railroad must request the medical facility to transfer the sealed toxicology kit directly to the express courier for transportation. If courier pickup is not available at the medical facility where the specimens are collected or for any other reason prompt transfer by the medical facility cannot be assured, the railroad must promptly transport the sealed shipping kit holding the specimens to the most expeditious point of shipment via air express, air freight or equivalent means. The railroad must maintain and document secure chain of custody of the kit from release by the medical facility to delivery for transportation, as described in Appendix C to this part.

§ 219.206 FRA access to breath test results.

Documentation of breath test results must be made available to FRA consistent with the requirements of this subpart, and the technical specifications set forth in Appendix C to this part.

§ 219.207 Fatality.

(a) In the case of an employee fatality in an accident or incident described in § 219.201, body fluid and/or tissue specimens must be obtained from the remains of the employee for toxicological testing. To ensure that specimens are timely collected, the railroad must immediately notify the appropriate local authority (such as a coroner or medical examiner) of the fatality and the requirements of this subpart, making available the shipping kit and requesting the local authority to assist in obtaining the necessary body fluid or tissue specimens. The railroad must also seek the assistance of the custodian of the remains, if a person other than the local authority.

(b) If the local authority or custodian of the remains declines to cooperate in obtaining the necessary specimens, the railroad must immediately notify the duty officer at the National Response Center (NRC) at (800) 424–8801 or (800) 424–8802 by providing the following information:

(1) Date and location of the accident or incident;

(2) Railroad;

(3) Name of the deceased;

(4) Name and telephone number of custodian of the remains; and

(5) Name and telephone number of local authority contacted.

(c) A coroner, medical examiner, pathologist, Aviation Medical Examiner, or other qualified professional is authorized to remove the required body fluid and/or tissue specimens from the remains on request of the railroad or FRA pursuant to this part; and, in so acting, such person is the delegate of the FRA Administrator under sections 20107 and 20108 of title 49, United States Code (but not the agent of the Secretary for purposes of the Federal Tort Claims Act (chapter 171 of title 28, United States Code). Such qualified professional may rely upon the representations of the railroad or FRA representative with respect to the occurrence of the event requiring that toxicological tests be conducted and the coverage of the deceased employee under this part.

(d) Appendix C to this part specifies body fluid and tissue specimens required for toxicological analysis in the case of a fatality.

§ 219.209 Reports of tests and refusals.

(a)(1) A railroad that has experienced one or more events for which specimens were obtained must provide prompt telephonic notification summarizing such events. Notification must immediately be provided to the duty officer at the National Response Center (NRC) at (800) 424–8802 and to the Office of Safety, FRA, at (202) 493–6313.

(2) Each telephonic report must contain:

(i) Name of railroad;

(ii) Name, title and telephone number of person making the report;

(iii) Time, date and location of the accident/incident;

(iv) Brief summary of the circumstances of the accident/incident, including basis for testing; and

(v) Number, names and occupations of employees tested.

(b) If the railroad is unable, as a result of non-cooperation of an employee or for any other reason, to obtain a specimen and cause it to be provided to FRA as required by this subpart, the railroad must make a concise narrative report of the reason for such failure and, if appropriate, any action taken in response to the cause of such failure. This report must be appended to the report of the accident/incident required to be submitted under Part 225 of this chapter.

(c) If a test required by this section is not administered within four hours following the accident or incident, the railroad must prepare and maintain on file a record stating the reasons the test was not promptly administered. Records must be submitted to FRA upon request of the FRA Associate Administrator for Safety.

§ 219.211 Analysis and follow-up.

(a) The laboratory designated in Appendix B to this part undertakes prompt analysis of specimens provided under this subpart, consistent with the need to develop all relevant information and produce a complete report. Specimens are analyzed for alcohol and controlled substances specified by FRA under protocols specified by FRA, summarized in Appendix C to this part, which have been submitted to Health and Human Services for acceptance. Specimens may be analyzed for other impairing substances specified by FRA as necessary to the particular accident investigation.

(b) Results of post-accident toxicological testing under this subpart are reported to the railroad's Medical Review Officer and the employee. The MRO and the railroad must treat the test results and any information concerning medical use or administration of drugs provided under this subpart in the same confidential manner as if subject to subpart H of this part, except where publicly disclosed by FRA or the National Transportation Safety Board.

(c) With respect to a surviving employee, a test reported as positive for alcohol or a controlled substance by the designated laboratory must be reviewed by the railroad's Medical Review Officer with respect to any claim of use or administration of medications (consistent with § 219.103) that could account for the laboratory findings. The Medical Review Officer must promptly report the results of each review to the Associate Administrator for Safety, FRA, Washington, DC 20590. Such report must be in writing and must reference the employing railroad, accident/incident date, and location, and the envelope must be marked ''ADMINISTRATIVELY CONFIDENTIAL: ATTENTION ALCOHOL/DRUG PROGRAM MANAGER.'' The report must state whether the MRO reported the test result to the employing railroad as positive or negative and the basis of any determination that analytes detected by the laboratory derived from authorized use (including a statement of the compound prescribed, dosage/frequency, and any restrictions imposed by the authorized medical practitioner). Unless specifically requested by FRA in writing, the Medical Review Officer may not disclose to FRA the underlying physical condition for which any medication was authorized or administered. The FRA is not bound by the railroad Medical Review Officer's determination, but that determination will be considered by FRA in relation to the accident/incident investigation and with respect to any enforcement action under consideration.

(d) To the extent permitted by law, FRA treats test results indicating medical use of controlled substances consistent with § 219.103 (and other information concerning medically authorized drug use or administration provided incident to such testing) as administratively confidential and withholds public disclosure, except where it is necessary to consider this information in an accident investigation in relation to determination of probable cause. (However, as further provided in this section, FRA may provide results

of testing under this subpart and supporting documentation to the National Transportation Safety Board.)

(e) An employee may respond in writing to the results of the test prior to the preparation of any final investigation report concerning the accident or incident. An employee wishing to respond may do so by letter addressed to the Alcohol/Drug Program Manager, Office of Safety, FRA, 400 Seventh Street, S.W., Washington, DC 20590 within 45 days of receipt of the test results. Any such submission must refer to the accident date, railroad and location, must state the position occupied by the employee on the date of the accident/incident, and must identify any information contained therein that the employee requests be withheld from public disclosure on grounds of personal privacy (but the decision whether to honor such request will be made by the FRA on the basis of controlling law).

(f)(1) The toxicology report may contain a statement of pharmacological significance to assist FRA and other parties in understanding the data reported. No such statement may be construed as a finding of probable cause in the accident or incident.

(2) The toxicology report is a part of the report of the accident/incident and therefore subject to the limitation of 49 U.S.C. 20903 (prohibiting use of the report for any purpose in a civil action for damages resulting from a matter mentioned in the report).

(g)(1) It is in the public interest to ensure that any railroad disciplinary actions that may result from accidents and incidents for which testing is required under this subpart are disposed of on the basis of the most complete and reliable information available so that responsive action will be appropriate. Therefore, during the interval between an accident or incident and the date that the railroad receives notification of the results of the toxicological analysis, any provision of collective bargaining agreements establishing maximum periods for charging employees with rule violations, or for holding an investigation, may not be deemed to run as to any offense involving the accident or incident (i.e., such periods must be tolled).

(2) This provision may not be construed to excuse the railroad from any obligation to timely charge an employee (or provide other actual notice) where the railroad obtains sufficient information relating to alcohol or drug use, impairment or possession or other rule violations prior to the receipt to toxicological analysis.

(3) This provision does not authorize holding any employee out of service pending receipt of toxicological analysis; nor does it restrict a railroad from taking such action in an appropriate case.

(h) Except as provided in §219.201 (with respect to non-qualifying events), each specimen (including each split specimen) provided under this subpart is retained for not less than three months following the date of the accident or incident (two years from the date of the accident or incident in the case of a specimen testing positive for alcohol or a controlled substance). Post-mortem specimens may be made available to the National Transportation Safety Board (on request).

(i) An employee (donor) may, within 60 days of the date of the toxicology report, request that his or her split specimen be tested by the designated laboratory or by another laboratory certified by Health and Human Services under that Department's Guidelines for Federal Workplace Drug Testing Programs that has available an appropriate, validated assay for the fluid and compound declared positive. Since some analytes may deteriorate during storage, detected levels of the compound shall, as technically appropriate, be reported and considered corroborative of the original test result. Any request for a retest shall be in writing, specify the railroad, accident date and location, be signed by the employee/donor, be addressed to the Associate Administrator for Safety, Federal Railroad Administration, Washington, DC 20590, and be designated ''ADMINISTRATIVELY CONFIDENTIAL: ATTENTION ALCOHOL/DRUG PROGRAM MANAGER.'' The expense of any employee-requested split specimen test at a laboratory other than the laboratory designated under this subpart shall be borne by the employee.

§ 219.213 Unlawful refusals; consequences.

(a) *Disqualification.* An employee who refuses to cooperate in providing breath, blood or urine specimens following an accident or incident specified in this subpart must be withdrawn from covered service and must be deemed disqualified for covered service for a period of nine (9) months in accordance with the conditions specified in § 219.107.

(b) *Procedures.* Prior to or upon withdrawing the employee from covered service under this section, the railroad must provide notice of the reason for this action and an opportunity for hearing before a presiding officer other than the charging official. The employee is entitled to the procedural protection set out in § 219.104(d).

(c) *Subject of hearing.* The hearing required by this section must determine whether the employee refused to submit to testing, having been requested to submit, under authority of this subpart, by a representative of the railroad. In determining whether a disqualification is required, the hearing official shall, as appropriate, also consider the following:

(1) Whether the railroad made a good faith determination, based on reasonable inquiry, that the accident or incident was within the mandatory testing requirements of this subpart; and

(2) In a case where a blood test was refused on the ground it would be inconsistent with the employee's health, whether such refusal was made in good faith and based on medical advice.

Subpart D—Testing for Cause

§ 219.300 Mandatory reasonable suspicion testing.

(a) *Requirements.* (1) A railroad must require a covered employee to submit to an alcohol test when the railroad has reasonable suspicion to believe that the employee has violated any prohibition of subpart B of this part concerning use of alcohol. The railroad's determination that reasonable suspicion exists to require the covered employee to undergo an alcohol test must be based on specific, contemporaneous, articulable observations concerning the appearance, behavior, speech or body odors of the employee.

(2) A railroad must require a covered employee to submit to a drug test when the railroad has reasonable suspicion to believe that the employee has violated the prohibitions of subpart B of this part concerning use of controlled substances. The railroad's determination that reasonable suspicion exists to require the covered employee to undergo a drug test must be based on specific, contemporaneous, articulable observations concerning the appearance, behavior, speech or body odors of the employee. Such observations may include indications of the chronic and withdrawal effects of drugs.

(b)(1) With respect to an alcohol test, the required observations must be made by a supervisor trained in accordance with § 219.11(g). The supervisor who makes the determination that reasonable suspicion exists may not conduct testing on that employee.

(2) With respect to a drug test, the required observations must be made by two supervisors, at least one of whom is trained in accordance with § 219.11(g).

(c) Nothing in this section may be construed to require the conduct of alcohol testing or drug testing when the employee is apparently in need of immediate medical attention.

(d)(1) If a test required by this section is not administered within two hours following the determination under this section, the railroad must prepare and maintain on file a record stating the reasons the test was not properly administered. If a test required by this section is not administered within eight hours of the determination under this section, the railroad must cease attempts to administer an alcohol test and must state in the record the reasons for not administering the test. Records must be submitted to FRA upon request of the FRA Administrator.

(2) [Reserved]

§ 219.301 Testing for reasonable cause.

(a) *Authorization.* A railroad may, under the conditions specified in this subpart, require any covered employee, as a condition of employment in covered service, to cooperate in breath or

body fluid testing, or both, to determine compliance with §§ 219.101 and 219.102 or a railroad rule implementing the requirements of §§ 219.101 and 219.102. This authority is limited to testing after observations or events that occur during duty hours (including any period of overtime or emergency service). The provisions of this subpart apply only when, and to the extent that, the test in question is conducted in reliance upon the authority conferred by this section. Section 219.23 prescribes the notice to an employee that is required when an employee is required to provide a breath or body fluid specimen under this part. A railroad may not require an employee to be tested under the authority of this subpart unless reasonable cause, as defined in this section, exists with respect to that employee.

(b) *For cause breath testing*. In addition to reasonable suspicion as described in § 219.300, the following circumstances constitute cause for the administration of alcohol tests under this section:

(1) [Reserved]

(2) *Accident/incident*. The employee has been involved in an accident or incident reportable under Part 225 of this chapter, and a supervisory employee of the railroad has a reasonable belief, based on specific, articulable facts, that the employee's acts or omissions contributed to the occurrence or severity of the accident or incident; or

(3) *Rule violation*. The employee has been directly involved in one of the following operating rule violations or errors:

(i) Noncompliance with a train order, track warrant, timetable, signal indication, special instruction or other direction with respect to movement of a train that involves—

(A) Occupancy of a block or other segment of track to which entry was not authorized;

(B) Failure to clear a track to permit opposing or following movement to pass;

(C) Moving across a railroad crossing at grade without authorization; or

(D) Passing an absolute restrictive signal or passing a restrictive signal without stopping (if required);

(ii) Failure to protect a train as required by a rule consistent with § 218.37 of this chapter (including failure to protect a train that is fouling an adjacent track, where required by the railroad's rules);

(iii) Operation of a train at a speed that exceeds the maximum authorized speed by at least ten (10) miles per hour or by fifty percent (50%) of such maximum authorized speed, whichever is less;

(iv) Alignment of a switch in violation of a railroad rule, failure to align a switch as required for movement, operation of a switch under a train, or unauthorized running through a switch;

(v) Failure to apply or stop short of derail as required;

(vi) Failure to secure a hand brake or failure to secure sufficient hand brakes, as required;

(vii) Entering a crossover before both switches are lined for movement; or

(viii) In the case of a person performing a dispatching function or block operator function, issuance of a train order or establishment of a route that fails to provide proper protection for a train.

(c) *For cause drug testing*. In addition to reasonable suspicion as described in § 219.300, each of the conditions set forth in paragraphs (b)(2) (''accident/incident'') and (b)(3) (''rule violation'') of this section as constituting cause for alcohol testing also constitutes cause with respect to drug testing.

(d) [Reserved]

(e) *Limitation for subpart C events*. The compulsory drug testing authority conferred by this section does not apply with respect to any event subject to post-accident toxicological testing as required by § 219.201. However, use of compulsory breath test authority is authorized in any case where breath test results can be obtained in a timely manner at the scene of the accident and conduct of such tests does not materially impede the collection of specimens under Subpart C of this part.

§ 219.302 Prompt specimen collection; time limitation.

(a) Testing under this subpart may only be conducted promptly following the observations or events upon which

the testing decision is based, consistent with the need to protect life and property.

(b) No employee may be required to participate in alcohol or drug testing under this section after the expiration of an eight-hour period from—

(1) The time of the observations or other events described in this section; or

(2) In the case of an accident/incident, the time a responsible railroad supervisor receives notice of the event providing reasonable cause for conduct of the test.

(c) An employee may not be tested under this subpart if that employee has been released from duty under the normal procedures of the railroad. An employee who has been transported to receive medical care is not released from duty for purposes of this section. Nothing in this section prohibits the subsequent testing of an employee who has failed to remain available for testing as required (i.e., who is absent without leave).

(d) As used in this subpart, a ''responsible railroad supervisor'' means any responsible line supervisor (e.g., a trainmaster or road foreman of engines) or superior official in authority over the employee to be tested.

(e) In the case of a drug test, the eight-hour requirement is satisfied if the employee has been delivered to the collection site (where the collector is present) and the request has been made to commence collection of the drug testing specimens within that period.

(f) [Reserved]

(g) Section 219.23 prescribes the notice to an employee that is required to provide breath or a body fluid specimen under this part.

Subpart E—Identification of Troubled Employees

§ 219.401 Requirement for policies.

(a) The purpose of this subpart is to prevent the use of alcohol and drugs in connection with covered service.

(b) Each railroad must adopt, publish and implement—

(1) A policy designed to encourage and facilitate the identification of those covered employees who abuse alcohol or drugs as a part of a treatable condition and to ensure that such employees are provided the opportunity to obtain counseling or treatment before those problems manifest themselves in detected violations of this part (hereafter ''voluntary referral policy''); and

(2) A policy designed to foster employee participation in preventing violations of this subpart and encourage co-worker participation in the direct enforcement of this part (hereafter ''co-worker report policy'').

(c) A railroad may comply with this subpart by adopting, publishing and implementing policies meeting the specific requirements of §§ 219.403 and 219.405 or by complying with § 219.407.

(d) If a railroad complies with this part by adopting, publishing and implementing policies consistent with §§ 219.403 and 219.405, the railroad must make such policies, and publications announcing such policies, available for inspection and copying by FRA.

(e) Nothing in this subpart may be construed to—

(1) Require payment of compensation for any period an employee is out of service under a voluntary referral or co-worker report policy;

(2) Require a railroad to adhere to a voluntary referral or co-worker report policy in a case where the referral or report is made for the purpose, or with the effect, of anticipating the imminent and probable detection of a rule violation by a supervising employee; or

(3) Limit the discretion of a railroad to dismiss or otherwise discipline an employee for specific rule violations or criminal offenses, except as specifically provided by this subpart.

§ 219.403 Voluntary referral policy.

(a) *Scope*. This section prescribes minimum standards for voluntary referral policies. Nothing in this section restricts a railroad from adopting, publishing and implementing a voluntary referral policy that affords more favorable conditions to employees troubled by alcohol or drug abuse problems, consistent with the railroad's responsibility to prevent violations of §§ 219.101 and 219.102.

(b) *Required provisions*. A voluntary referral policy must include the following provisions:

(1) A covered employee who is affected by an alcohol or drug use problem may maintain an employment relationship with the railroad if, before the employee is charged with conduct deemed by the railroad sufficient to warrant dismissal, the employee seeks assistance through the railroad for the employee's alcohol or drug use problem or is referred for such assistance by another employee or by a representative of the employee's collective bargaining unit. The railroad must specify whether, and under what circumstances, its policy provides for the acceptance of referrals from other sources, including (at the option of the railroad) supervisory employees.

(2) Except as may be provided under paragraph (c) of this section, the railroad treats the referral and subsequent handling, including counseling and treatment, as confidential.

(3) The railroad will, to the extent necessary for treatment and rehabilitation, grant the employee a leave of absence from the railroad for the period necessary to complete primary treatment and establish control over the employee's alcohol or drug problem. The policy must allow a leave of absence of not less than 45 days, if necessary for the purpose of meeting initial treatment needs.

(4) Except as may be provided under paragraph (c)(2) of this section, the employee will be returned to service on the recommendation of the substance abuse professional. Approval to return to service may not be unreasonably withheld.

(5) With respect to a certified locomotive engineer or a candidate for certification, the railroad must meet the requirements of § 240.119(e) of this chapter.

(c) *Optional provisions.* A voluntary referral policy may include any of the following provisions, at the option of the railroad:

(1) The policy may provide that the rule of confidentiality is waived if—

(i) The employee at any time refuses to cooperate in a recommended course of counseling or treatment; and/or

(ii) The employee is later determined, after investigation, to have been involved in an alcohol or drug-related disciplinary offense growing out of subsequent conduct.

(2) The policy may require successful completion of a return-to-service medical examination as a further condition on reinstatement in covered service.

(3) The policy may provide that it does not apply to an employee who has previously been assisted by the railroad under a policy or program substantially consistent with this section or who has previously elected to waive investigation under § 219.405 (co-worker report policy).

(4) The policy may provide that, in order to invoke its benefits, the employee must report to the contact designated by the railroad either:

(i) During non-duty hours (i.e., at a time when the employee is off duty); or

(ii) While unimpaired and otherwise in compliance with the railroad's alcohol and drug rules consistent with this subpart.

§ 219.405 Co-worker report policy.

(a) *Scope.* This section prescribes minimum standards for co-worker report policies. Nothing in this section restricts a railroad from adopting, publishing and implementing a policy that affords more favorable conditions to employees troubled by alcohol or drug abuse problems, consistent with the railroad's responsibility to prevent violations of §§ 219.101 and 219.102.

(b) *Employment relationship.* A co-worker report policy must provide that a covered employee may maintain an employment relationship with the railroad following an alleged first offense under this part or the railroad's alcohol and drug rules, subject to the conditions and procedures contained in this section.

(c) *General conditions and procedures.* (1) The alleged violation must come to the attention of the railroad as a result of a report by a co-worker that the employee was apparently unsafe to work with or was, or appeared to be, in violation of this part or the railroad's alcohol and drug rules.

(2) If the railroad representative determines that the employee is in violation, the railroad may immediately remove the employee from service in accordance with its existing policies and procedures.

(3) The employee must elect to waive investigation on the rule charge and must contact the substance abuse professional within a reasonable period specified by the policy.

(4) The substance abuse professional must schedule necessary interviews with the employee and complete an evaluation within 10 calendar days of the date on which the employee contacts the professional with a request for evaluation under the policy, unless it becomes necessary to refer the employee for further evaluation. In each case, all necessary evaluations must be completed within 20 days of the date on which the employee contacts the professional.

(d) *When treatment is required.* If the substance abuse professional determines that the employee is affected by psychological or chemical dependence on alcohol or a drug or by another identifiable and treatable mental or physical disorder involving the abuse of alcohol or drugs as a primary manifestation, the following conditions and procedures apply:

(1) The railroad must, to the extent necessary for treatment and rehabilitation, grant the employee a leave of absence from the railroad for the period necessary to complete primary treatment and establish control over the employee's alcohol or drug problem. The policy must allow a leave of absence of not less than 45 days, if necessary for the purpose of meeting initial treatment needs.

(2) The employee must agree to undertake and successfully complete a course of treatment deemed acceptable by the substance abuse professional.

(3) The railroad must promptly return the employee to service, on recommendation of the substance abuse professional, when the employee has established control over the substance abuse problem. Return to service may also be conditioned on successful completion of a return-to-service medical examination. Approval to return to service may not be unreasonably withheld.

(4) Following return to service, the employee, as a further condition on withholding of discipline, may, as necessary, be required to participate in a reasonable program of follow-up treatment for a period not to exceed 60 months from the date the employee was originally withdrawn from service.

(e) *When treatment is not required.* If the substance abuse professional determines that the employee is not affected by an identifiable and treatable mental or physical disorder—

(1) The railroad must return the employee to service within 5 days after completion of the evaluation.

(2) During or following the out-of-service period, the railroad may require the employee to participate in a program of education and training concerning the effects of alcohol and drugs on occupational or transportation safety.

(f) *Follow-up tests.* A railroad may conduct return-to-service and/or follow-up tests (as described in § 219.104) of an employee who waives investigation and is determined to be ready to return to service under this section.

§ 219.407 Alternate policies.

(a) In lieu of a policy under § 219.403 (voluntary referral) or § 219.405 (co-worker report), or both, a railroad may adopt, publish and implement, with respect to a particular class or craft of covered employees, an alternate policy or policies having as their purpose the prevention of alcohol or drug use in railroad operations, if such policy or policies have the written concurrence of the recognized representatives of such employees.

(b) The concurrence of recognized employee representatives in an alternate policy may be evidenced by a collective bargaining agreement or any other document describing the class or craft of employees to which the alternate policy applies. The agreement or other document must make express reference to this part and to the intention of the railroad and employee representatives that the alternate policy applies in lieu of the policy required by § 219.403, § 219.405, or both.

(c) The railroad must file the agreement or other document described in paragraph (b) of this section with the Associate Administrator for Safety, FRA. If the alternate policy is amended or revoked, the railroad must file a

notice of such amendment or revocation at least 30 days prior to the effective date of such action.

(d) This section does not excuse a railroad from adopting, publishing and implementing the policies required by §§ 219.403 and 219.405 with respect to any group of covered employees not within the coverage of an appropriate alternate policy.

Subpart F—Pre-Employment Tests

§ 219.501 Pre-employment drug testing.

(a) Prior to the first time a covered employee performs covered service for a railroad, the employee must undergo testing for drugs. No railroad may allow a covered employee to perform covered service, unless the employee has been administered a test for drugs with a result that did not indicate the misuse of controlled substances. This requirement applies to final applicants for employment and to employees seeking to transfer for the first time from non-covered service to duties involving covered service.

(b) As used in subpart H of this part with respect to a test required under this subpart, the term covered employee includes an applicant for pre-employment testing only. In the case of an applicant who declines to be tested and withdraws the application for employment, no record may be maintained of the declination.

§ 219.502 Pre-employment alcohol testing.

(a) A railroad may, but is not required to, conduct pre-employment alcohol testing under this part. If a railroad chooses to conduct pre-employment alcohol testing, the railroad must comply with the following requirements:

(1) It must conduct a pre-employment alcohol test before the first performance of safety-sensitive functions by every covered employee (whether a new employee or someone who has transferred to a position involving the performance of safety-sensitive functions).

(2) It must treat all safety-sensitive employees performing safety-sensitive functions the same for the purpose of pre-employment alcohol testing (i.e., it must not test some covered employees and not others).

(3) It must conduct the pre-employment tests after making a contingent offer of employment or transfer, subject to the employee passing the pre-employment alcohol test.

(4) It must conduct all pre-employment alcohol tests using the alcohol testing procedures of part 40 of this title.

(5) It must not allow a covered employee to begin performing safety-sensitive functions unless the result of the employee's test indicates an alcohol concentration of less than 0.04.

(b) As used in subpart H of this part, with respect to a test authorized under this subpart, the term covered employee includes an applicant for pre-employment testing only. In the case of an applicant who declines to be tested and withdraws the application for employment, no record may be maintained of the declination.

§ 219.503 Notification; records.

The railroad must provide for medical review of drug test results as provided in subpart H of this part. The railroad must notify the applicant of the results of the drug and alcohol tests in the same manner as provided for employees in subpart H of this part. Records must be maintained confidentially and be retained in the same manner as required under subpart J of this part for employee test records, except that such records need not reflect the identity of an applicant whose application for employment in covered service was denied.

§ 219.505 Refusals.

An applicant who has refused to submit to pre-employment testing under this section may not be employed in covered service based upon the application and examination with respect to which such refusal was made. This section does not create any right on the part of the applicant to have a subsequent application considered; nor does it restrict the discretion of the railroad to entertain a subsequent application for employment from the same person.

Subpart G—Random Alcohol and Drug Testing Programs

§ 219.601 Railroad random drug testing programs.

(a) *Submission*. Each railroad must submit for FRA approval a random testing program meeting the requirements of this subpart. A railroad commencing operations must submit such a program not later than 30 days prior to such commencement. The program must be submitted to the Associate Administrator for Safety, FRA, for review and approval by the FRA Administrator. If, after approval, a railroad desires to amend the random testing program implemented under this subpart, the railroad must file with FRA a notice of such amendment at least 30 days prior to the intended effective date of such action. A railroad already subject to this subpart that becomes subject to this subpart with respect to one or more additional employees must amend its program not later than 60 days after these employees become subject to this subpart and file with FRA a notice of such amendment at least 30 days prior to the intended effective date of such action. A program responsive to the requirements of this section or any amendment to the program may not be implemented prior to approval.

(b) *Form of programs*. Random testing programs submitted by or on behalf of each railroad under this subpart must meet the following criteria, and the railroad and its managers, supervisors, officials and other employees and agents must conform to such criteria in implementing the program:

(1) Selection of covered employees for testing must be made by a method employing objective, neutral criteria which ensure that every covered employee has a substantially equal statistical chance of being selected within a specified time frame. The method may not permit subjective factors to play a role in selection, i.e., no employee may be selected as the result of the exercise of discretion by the railroad. The selection method must be capable of verification with respect to the randomness of the selection process, and any records necessary to document random selection must be retained for not less than 24 months from the date upon which the particular specimens were collected.

(2)(i) The program must select for testing a sufficient number of employees so that, during the first 12 months—

(A) The random testing program is spread reasonably through the 12-month period.

(B) [Reserved]

(ii) To calculate the total number of covered employees eligible for random testing throughout the year, as a railroad, you must add the total number of covered employees eligible for testing during each random testing period for the year and divide that total by the number of random testing periods. Covered employees, and only covered employees, are to be in a railroad's random testing pool, and all covered employees must be in the random pool. If you are a railroad conducting random testing more often than once per month (*e.g.*, you select daily, weekly, bi-weekly), you do not need to compute this total number of covered employees rate more than on a once per month basis.

(iii) As a railroad, you may use a service agent (*e.g.*, C/TPA) to perform random selections for you, and your covered employees may be part of a larger random testing pool of covered employees. However, you must ensure that the service agent you use is testing at the appropriate percentage established for your industry and that only covered employees are in the random testing pool.

(3) Railroad random testing programs must ensure to the maximum extent practicable that each employee perceives the possibility that a random test may be required on any day the employee reports for work.

(4) Notice of an employee's selection may not be provided until the duty tour in which testing is to be conducted, and then only so far in advance as is reasonably necessary to ensure the employee's presence at the time and place set for testing.

(5) The program must include testing procedures and safeguards, and procedures for action based on positive test results, consistent with this part.

(6) An employee must be subject to testing only while on duty. Only employees who perform covered service for the railroad are subject to testing under this part. In the case of employees who during some duty tours perform covered service and during others do not, the railroad program must specify the extent to which, and the circumstances under which they are to be subject to testing. To the extent practical within the limitations of this part and in the context of the railroad's operations, the railroad program must provide that employees are subject to the possibility of random testing on any day they actually perform covered service.

(7) Each time an employee is notified for random drug testing the employee will be informed that selection was made on a random basis.

(c) *Approval.* The Associate Administrator for Safety, FRA, will notify the railroad in writing whether the program is approved as consistent with the criteria set forth in this part. If the Associate Administrator for Safety determines that the program does not conform to those criteria, the Associate Administrator for Safety will inform the railroad of any matters preventing approval of the program, with specific explanation as to necessary revisions. The railroad must resubmit its program with the required revisions within 30 days of such notice. Failure to resubmit the program with the necessary revisions will be considered a failure to implement a program under this subpart.

(d) *Implementation.* (1) No later than 45 days prior to commencement of random testing, the railroad must publish to each of its covered employees, individually, a written notice that he or she will be subject to random drug testing under this part. Such notice must state the date for commencement of the program, must state that the selection of employees for testing will be on a strictly random basis, must describe the consequences of a determination that the employee has violated § 219.102 or any applicable railroad rule, and must inform the employee of the employee's rights under subpart E of this part. A copy of the notice must be provided to each new covered employee on or before the employee's initial date of service. Since knowledge of Federal law is presumed, nothing in this paragraph (d)(1) creates a defense to a violation of § 219.102.

(2) A railroad commencing operations must submit a random testing program 60 days after doing so. The railroad must implement its approved random testing program not later than the expiration of 60 days from approval by the Administrator.

[66 FR 41973, Aug. 9, 2001, as amended at 68 FR 75463, Dec. 31, 2003]

§ 219.602 FRA Administrator's determination of random drug testing rate.

(a) Except as provided in paragraphs (b) through (d) of this section, the minimum annual percentage rate for random drug testing must be 50 percent of covered employees.

(b) The FRA Administrator's decision to increase or decrease the minimum annual percentage rate for random drug testing is based on the reported positive rate for the entire industry. All information used for this determination is drawn from the drug MIS reports required by this part. In order to ensure reliability of the data, the Administrator considers the quality and completeness of the reported data, may obtain additional information or reports from railroads, and may make appropriate modifications in calculating the industry positive rate. Each year, the Administrator will publish in the FEDERAL REGISTER the minimum annual percentage rate for random drug testing of covered employees. The new minimum annual percentage rate for random drug testing will be applicable starting January 1 of the calendar year following publication.

(c) When the minimum annual percentage rate for random drug testing is 50 percent, the Administrator may lower this rate to 25 percent of all covered employees if the Administrator determines that the data received under the reporting requirements of § 219.800 for two consecutive calendar years indicate that the reported positive rate is less than 1.0 percent.

(d) When the minimum annual percentage rate for random drug testing is 25 percent, and the data received under

the reporting requirements of § 219.800 for any calendar year indicate that the reported positive rate is equal to or greater than 1.0 percent, the Administrator will increase the minimum annual percentage rate for random drug testing to 50 percent of all covered employees.

(e) Selection of covered employees for testing must be made by a method employing objective, neutral criteria which ensures that every covered employee has a substantially equal statistical chance of being selected within a specified time frame. The method may not permit subjective factors to play a role in selection, i.e., no employee may be selected as a result of the exercise of discretion by the railroad. The selection method must be capable of verification with respect to the randomness of the selection process.

(f) The railroad must randomly select a sufficient number of covered employees for testing during each calendar year to equal an annual rate not less than the minimum annual percentage rate for random drug testing determined by the Administrator. If the railroad conducts random drug testing through a consortium, the number of employees to be tested may be calculated for each individual railroad or may be based on the total number of covered employees covered by the consortium who are subject to random drug testing at the same minimum annual percentage rate under this part or any DOT agency drug testing rule.

(g) Each railroad must ensure that random drug tests conducted under this part are unannounced and that the dates for administering random tests are spread reasonably throughout the calendar year.

(h) If a given covered employee is subject to random drug testing under the drug testing rules of more than one DOT agency for the same railroad, the employee must be subject to random drug testing at the percentage rate established for the calendar year by the DOT agency regulating more than 50 percent of the employee's function.

(i) If a railroad is required to conduct random drug testing under the drug testing rules of more than one DOT agency, the railroad may—

(1) Establish separate pools for random selection, with each pool containing the covered employees who are subject to testing at the same required rate; or

(2) Randomly select such employees for testing at the highest percentage rate established for the calendar year by any DOT agency to which the railroad is subject.

[66 FR 41973, Aug. 9, 2001, as amended at 68 FR 75463, Dec. 31, 2003]

§ 219.603 Participation in drug testing.

A railroad shall, under the conditions specified in this subpart and subpart H of this part, require a covered employee selected through the random testing program to cooperate in urine testing to determine compliance with § 219.102, and the employee must provide the required specimen and complete the required paperwork and certifications. Compliance by the employee may be excused only in the case of a documented medical or family emergency.

§ 219.605 Positive drug test results; procedures.

(a) [Reserved]

(b) Procedures for administrative handling by the railroad in the event a specimen provided under this subpart is reported as positive by the MRO are set forth in § 219.104. The responsive action required in § 219.104 is not stayed pending the result of a retest or split specimen test.

§ 219.607 Railroad random alcohol testing programs.

(a) Each railroad must submit for FRA approval a random alcohol testing program meeting the requirements of this subpart. A railroad commencing operations must submit a random alcohol testing program not later than 30 days prior to such commencement. The program must be submitted to the Associate Administrator for Safety, FRA, for review and approval. If, after approval, a railroad desires to amend the random alcohol testing program implemented under this subpart, the railroad must file with FRA a notice of such amendment at least 30 days prior to

the intended effective date of such action. A program responsive to the requirements of this section or any amendment to the program may not be implemented prior to approval.

(b) *Form of programs*. Random alcohol testing programs submitted by or on behalf of each railroad under this subpart must meet the following criteria, and the railroad and its managers, supervisors, officials and other employees and agents must conform to such criteria in implementing the program:

(1) As a railroad, to calculate the total number of covered employees eligible for random testing throughout the year, you must add the total number of covered employees eligible for testing during each random testing period for the year and divide that total by the number of random testing periods. Covered employees, and only covered employees, are to be in a railroad's random testing pool, and all covered employees must be in the random pool. If you are a railroad conducting random testing more often than once per month (*e.g.*, you select daily, weekly, bi-weekly), you do not need to compute this total number of covered employees rate more than on a once per month basis.

(i) As a railroad, you may use a service agent (*e.g.*, C/TPA) to perform random selections for you, and your covered employees may be part of a larger random testing pool of covered employees. However, you must ensure that the service agent you use is testing at the appropriate percentage established for your industry and that only covered employees are in the random testing pool.

(ii) [Reserved]

(2) The program must include testing procedures and safeguards, and, consistent with this part, procedures for action based on tests where the employee is found to have violated §219.101.

(3) The program must ensure that random alcohol tests conducted under this part are unannounced and that the dates for administering random tests are spread reasonably throughout the calendar year.

(4) The program must ensure to the maximum extent practicable that each covered employee perceives the possibility that a random alcohol test may be required at any time the employee reports for work and at any time during the duty tour (except any period when the employee is expressly relieved of any responsibility for performance of covered service).

(5) An employee may be subject to testing only while on duty. Only employees who perform covered service for the railroad may be subject to testing under this part. In the case of employees who during some duty tours perform covered service and during others do not, the railroad program may specify the extent to which, and the circumstances under which they are subject to testing. To the extent practical within the limitations of this part and in the context of the railroad's operations, the railroad program must provide that employees are subject to the possibility of random testing on any day they actually perform covered service.

(6) Testing must be conducted promptly, as provided in §219.701(b)(1).

(7) Each time an employee is notified for random alcohol testing the employee must be informed that selection was made on a random basis.

(8) Each railroad must ensure that each covered employee who is notified of selection for random alcohol testing proceeds to the test site immediately; provided, however, that if the employee is performing a safety-sensitive function at the time of the notification, the railroad must instead ensure that the employee ceases to perform the safety-sensitive function and proceeds to the testing site as soon as possible.

(c) *Implementation*. (1) No later than 45 days prior to commencement of random alcohol testing, the railroad must publish to each of its covered employees, individually, a written notice that the employee will be subject to random alcohol testing under this part. Such notice must state the date for commencement of the program, must state that the selection of employees for testing will be on a strictly random basis, must describe the consequences of a determination that the employee has violated §219.101 or any applicable railroad rule, and must inform the employee of the employee's rights under subpart E of this part. A copy of the

notice must be provided to each new covered employee on or before the employee's initial date of service. Since knowledge of Federal law is presumed, nothing in this paragraph (c)(1) creates a defense to a violation of § 219.101. This notice may be combined with the notice or policy statement required by § 219.23.

(2) A railroad commencing operations must submit a random testing program 60 days after doing so. The railroad must implement its approved random testing program not later than the expiration of 60 days from approval by the Administrator.

[66 FR 41973, Aug. 9, 2001, as amended at 68 FR 75464, Dec. 31, 2003]

§ 219.608 FRA Administrator's determination of random alcohol testing rate.

(a) Except as provided in paragraphs (b) through (d) of this section, the minimum annual percentage rate for random alcohol testing must be 25 percent of covered employees.

(b) The Administrator's decision to increase or decrease the minimum annual percentage rate for random alcohol testing is based on the violation rate for the entire industry. All information used for the determination is drawn from the alcohol MIS reports required by this part. In order to ensure reliability of the data, the Administrator considers the quality and completeness of the reported data, may obtain additional information or reports from employers, and may make appropriate modifications in calculating the industry violation rate. Each year, the Administrator will publish in the FEDERAL REGISTER the minimum annual percentage rate for random alcohol testing of covered employees. The new minimum annual percentage rate for random alcohol testing will be applicable starting January 1 of the calendar year following publication.

(c)(1) When the minimum annual percentage rate for random alcohol testing is 25 percent or more, the Administrator may lower this rate to 10 percent of all covered employees if the Administrator determines that the data received under the reporting requirements of § 219.800 for two consecutive calendar years indicate that the violation rate is less than 0.5 percent.

(2) When the minimum annual percentage rate for random alcohol testing is 50 percent, the Administrator may lower this rate to 25 percent of all covered employees if the Administrator determines that the data received under the reporting requirements of § 219.800 for two consecutive calendar years indicate that the violation rate is less than 1.0 percent but equal to or greater than 0.5 percent.

(d)(1) When the minimum annual percentage rate for random alcohol testing is 10 percent, and the data received under the reporting requirements of § 219.800 for that calendar year indicate that the violation rate is equal to or greater than 0.5 percent, but less than 1.0 percent, the Administrator will increase the minimum annual percentage rate for random alcohol testing to 25 percent of all covered employees.

(2) When the minimum annual percentage rate for random alcohol testing is 25 percent or less, and the data received under the reporting requirements of § 219.800 for any calendar year indicate that the violation rate is equal to or greater than 1.0 percent, the Administrator will increase the minimum annual percentage rate for random alcohol testing to 50 percent of all covered employees.

(e) The railroad must randomly select and test a sufficient number of covered employees for testing during each calendar year to equal an annual rate not less than the minimum annual percentage rate for random alcohol testing determined by the Administrator. If the railroad conducts random alcohol testing through a consortium, the number of employees to be tested may be calculated for each individual employer or may be based on the total number of covered employees covered by the consortium who are subject to random testing at the same minimum annual percentage rate under this part or any DOT agency alcohol testing rule.

(f) If a railroad is required to conduct random alcohol testing under the alcohol testing rules of more than one DOT agency, the railroad may—

(1) Establish separate pools for random selection, with each pool containing the covered employees who are subject to testing at the same required rate; or

(2) Randomly select such employees for testing at the highest percentage rate established for the calendar year by any DOT agency to which the railroad is subject.

[66 FR 41973, Aug. 9, 2001, as amended at 68 FR 75464, Dec. 31, 2003]

§ 219.609 Participation in alcohol testing.

A railroad must, under the conditions specified in this subpart and subpart H of this part, require a covered employee selected through the random testing program to cooperate in breath testing to determine compliance with § 219.101, and the employee must provide the required breath and complete the required paperwork and certifications. Compliance by the employee may be excused only in the case of a documented medical or family emergency.

§ 219.611 Test result indicating prohibited alcohol concentration; procedures.

Procedures for administrative handling by the railroad in the event an employee's confirmation test indicates an alcohol concentration of .04 or greater are set forth in § 219.104.

Subpart H—Drug and Alcohol Testing Procedures

§ 219.701 Standards for drug and alcohol testing.

(a) Drug testing required or authorized by subparts B, D, F, and G of this part must be conducted in compliance with all applicable provisions of the Department of Transportation Procedures for Transportation Workplace Drug and Alcohol Testing Programs (part 40 of this title).

(b) Alcohol testing required or authorized by subparts B, D, F, and G of this part must be conducted in compliance with all applicable provisions of the Department of Transportation Procedures for Transportation Workplace Drug and Alcohol Testing Programs (part 40 of this title).

(c) Each covered employee who is notified of selection for testing and who is not performing covered service at the time of notification must proceed to the testing site immediately. The railroad must ensure that an employee who is performing covered service at the time of notification shall, as soon as possible without affecting safety, cease to perform covered service and proceed to the testing site.

Subpart I—Annual Report

§ 219.800 Annual reports.

(a) Each railroad that has a total of 400,000 or more employee hours (including hours worked by all employees of the railroad, regardless of occupation, not only while in the United States but also while outside the United States) must submit to FRA by March 15 of each year a report covering the previous calendar year (January 1–December 31), summarizing the results of its alcohol misuse prevention program. As used in this paragraph, the term ''employees of the railroad'' includes individuals who perform service for the railroad, including not only individuals who receive direct monetary compensation from the railroad for performing a service for the railroad, but also such individuals as employees of a contractor to the railroad who perform a service for the railroad.

(b) As a railroad, you must use the Management Information System (MIS) form and instructions as required by 49 CFR part 40 (at § 40.25 and appendix H to part 40). You may also use the electronic version of the MIS form provided by the DOT. The Administrator may designate means (*e.g.*, electronic program transmitted via the Internet), other than hard-copy, for MIS form submission to FRA. For information on where to submit MIS forms and for the electronic version of the form, see: *http://www.fra.dot.gov/Content3.asp?P=504*.

(c) Each railroad shall ensure the accuracy and timeliness of each report submitted.

(d) As a railroad, if you have a covered employee who performs multi-DOT agency functions (*e.g.*, an employee drives a commercial motor vehicle and performs switchman duties for

you), count the employee only on the MIS report for the DOT agency under which he or she is random tested. Normally, this will be the DOT agency under which the employee performs more than 50% of his or her duties. Railroads may have to explain the testing data for these employees in the event of a DOT agency inspection or audit.

(e) A service agent (*e.g.*, a consortium/third party administrator) may prepare the MIS report on behalf of a railroad. However, a railroad official (*e.g.*, a designated employee representative) must certify the accuracy and completeness of the MIS report, no matter who prepares it.

[68 FR 75464, Dec. 31, 2003, as amended at 69 FR 19288, Apr. 12, 2004]

§§ 219.801–219.803 [Reserved]

Subpart J—Recordkeeping Requirements

§ 219.901 Retention of alcohol testing records.

(a) *General requirement*. In addition to the records required to be kept by part 40 of this title, each railroad must maintain alcohol misuse prevention program records in a secure location with controlled access as set out in this section.

(b) Each railroad must maintain the following records for a minimum of five years:

(1) A summary record of each covered employee's test results; and

(2) A copy of the annual report summarizing the results of its alcohol misuse prevention program (if required to submit the report under § 219.801(a)).

(c) Each railroad must maintain the following records for a minimum of two years:

(1) Records related to the collection process:

(i) Collection logbooks, if used.

(ii) Documents relating to the random selection process.

(iii) Documents generated in connection with decisions to administer reasonable suspicion alcohol tests.

(iv) Documents generated in connection with decisions on post-accident testing.

(v) Documents verifying the existence of a medical explanation of the inability of a covered employee to provide an adequate specimen.

(2) Records related to test results:

(i) The railroad's copy of the alcohol test form, including the results of the test.

(ii) Documents related to the refusal of any covered employee to submit to an alcohol test required by this part.

(iii) Documents presented by a covered employee to dispute the result of an alcohol test administered under this part.

(3) Records related to other violations of this part.

(4) Records related to employee training:

(i) Materials on alcohol abuse awareness, including a copy of the railroad's policy on alcohol abuse.

(ii) Documentation of compliance with the requirements of § 219.23.

(iii) Documentation of training provided to supervisors for the purpose of qualifying the supervisors to make a determination concerning the need for alcohol testing based on reasonable suspicion.

(iv) Certification that any training conducted under this part complies with the requirements for such training.

§ 219.903 Retention of drug testing records.

(a) *General requirement*. In addition to the records required to be kept by part 40 of this title, each railroad must maintain drug abuse prevention program records in a secure location with controlled access as set forth in this section.

(b) (1) Each railroad must maintain the following records for a minimum of five years:

(i) A summary record of each covered employee's test results; and

(ii) A copy of the annual report summarizing the results of its drug misuse prevention program (if required to submit under § 219.803(a)).

(2) Each railroad must maintain the following records for a minimum of two years.

(c) *Types of records*. The following specific records must be maintained:

(1) Records related to the collection process:

(i) Documents relating to the random selection process.

(ii) Documents generated in connection with decisions to administer reasonable suspicion drug tests.

(iii) Documents generated in connection with decisions on post-accident testing.

(iv) Documents verifying the existence of a medical explanation of the inability of a covered employee to provide a specimen.

(2) Records related to test results:

(i) The railroad's copy of the drug test custody and control form, including the results of the test.

(ii) Documents presented by a covered employee to dispute the result of a drug test administered under this part.

(3) Records related to other violations of this part.

(4) Records related to employee training:

(i) Materials on drug abuse awareness, including a copy of the railroad's policy on drug abuse.

(ii) Documentation of compliance with the requirements of § 219.23.

(iii) Documentation of training provided to supervisors for the purpose of qualifying the supervisors to make a determination concerning the need for alcohol testing based on reasonable suspicion.

(iv) Certification that any training conducted under this part complies with the requirements for such training.

§ 219.905 Access to facilities and records.

(a) Release of covered employee information contained in records required to be maintained under §§ 219.901 and 219.903 must be in accordance with part 40 of this title and with this section. (For purposes of this section only, urine drug testing records are considered equivalent to breath alcohol testing records.)

(b) Each railroad must permit access to all facilities utilized in complying with the requirements of this part to the Secretary of Transportation, United States Department of Transportation, or any DOT agency with regulatory authority over the railroad or any of its covered employees.

(c) Each railroad must make available copies of all results for railroad alcohol and drug testing programs conducted under this part and any other information pertaining to the railroad's alcohol and drug misuse prevention program, when requested by the Secretary of Transportation or any DOT agency with regulatory authority over the railroad or covered employee.

APPENDIX A TO PART 219—SCHEDULE OF CIVIL PENALTIES

The following chart lists the schedule of civil penalties:

PENALTY SCHEDULE [1]

Section [2]	Violation	Willful violation
Subpart A—General		
219.3 Application:		
Railroad does not have required program	$5,000	$7,500
219.11 General conditions for chemical tests:		
(b)(1) Employee unlawfully refuses to participate in testing	2,500	5,000
(b)(2) Employer fails to give priority to medical treatment	3,000	8,000
(b)(3) Employee fails to remain available	2,500	5,000
(b)(4) Employee tampers with specimen	2,500	5,000
(d) Employee unlawfully required to execute a waiver of rights	2,500	5,000
(e) Railroad used or authorized the use of coercion to obtain specimens	.....	7,500
(g) Failure to meet supervisory training requirements or program of instruction not available or program not complete	2,500	5,000
(h) Urine or blood specimens provided for Federal testing were used for non-authorized testing	2,500	5,000
219.23 Railroad policies:		
(a) Failure to provide written notice of FRA test	1,000	4,000
(b) Failure to provide written notice of basis for FRA test	1,000	4,000
(c) Use of Subpart C form for other test	1,000	4,000

PENALTY SCHEDULE [1]—Continued

Section [2]	Violation	Willful violation
(d) Failure to provide educational materials	1,000	4,000
(e) Educational materials fail to explain requirements of this part and/or include required content	1,000	4,000
(f) Non-Federal provisions are clearly described as independent authority	1,000	4,000
Subpart B—Prohibitions		
219.101 Alcohol and drug use prohibited:		
Employee violates prohibition(s)	10,000	.....
219.103 Prescribed and over-the-counter drugs:		
(a) Failure to train employee properly on requirements	2,500	5,000
219.104 Responsive action:		
(a) Failure to remove employee from covered service immediately	3,000	8,000
(b) Failure to provide notice for removal	1,000	4,000
(c) Failure to provide prompt hearing	2,000	7,000
(d) Employee improperly returned to service	2,000	7,000
219.105 Railroad's duty to prevent violations:		
(a) Employee improperly permitted to remain in covered service	7,000	10,000
(b) Failure to exercise due diligence to assure compliance with prohibition	2,500	5,000
219.107 Consequences of unlawful refusal:		
(a) Failure to disqualify an employee for nine months following a refusal	5,000	7,500
(e) Employee unlawfully returned to service	5,000	7,500
Subpart C—Post-Accident Toxicological Testing		
219.201 Events for which testing is required:		
(a) Failure to test after qualifying event (each employee not tested is a violation)	5,000	7,500
(c)(1)(i) Failure to make good faith determination	2,500	5,000
(c)(1)(ii) Failure to provide requested decision report to FRA	1,000	3,000
(c)(2) Testing performed after non-qualifying event	5,000	10,000
219.203 Responsibilities of railroads and employees:		
(a)(1)(i) and (a)(2)(i) Failure to properly test/exclude from testing	2,500	5,000
(a)(1)(ii) and (a)(2)(ii) Non-covered service employee tested	2,500	5,000
(b)(1) Delay in obtaining specimens due to failure to make every reasonable effort	2,500	5,000
(c) Independent medical facility not utilized	2,500	5,000
(d) Failure to report event or contact FRA when intervention required	1,000	3,000
219.205 Specimen collection and handling:		
(a) Failure to observe requirements with respect to specimen collection, marking and handling	2,500	5,000
(b) Failure to provide properly prepared forms with specimens	2,500	5,000
(d) Failure to promptly or properly forward specimens	2,500	5,000
219.207 Fatality:		
(a) Failure to test	5,000	7,500
(a)(1) Failure to ensure timely collection and shipment of required specimens	2,500	5,000
(b) Failure to request assistance when necessary	2,500	5,000
219.209 Reports of tests and refusals:		
(a)(1) Failure to provide telephonic report	1,000	2,000
(b) Failure to provide written report of refusal to test	1,000	2,000
(c) Failure to maintain report explaining why test not conducted within 4 hours	1,000	2,000
219.211 Analysis and follow-up:		
(c) Failure of MRO to report review of positive results to FRA	2,500	5,000
Subpart D—Testing for Cause		
219.300 Mandatory reasonable suspicion testing:		
(a)(1) Failure to test when reasonable suspicion criteria met	5,000	7,500
(a)(2) Tested when reasonable suspicion criteria not met	5,000	7,500
219.301 Testing for reasonable cause:		
(a) Event did not occur during daily tour	2,500	5,000
(b)(2) Tested when accident/incident criteria not met	5,000	7,500
(b)(3) Tested when operating rules violation criteria not met	5,000	7,500
219.302 Prompt specimen collection:		
(a) Specimen collection not conducted promptly	2,500	5,000
Subpart E—Identification of Troubled Employees		
219.401 Requirement for policies:		
(b) Failure to publish and/or implement required policy	2,500	5,000
219.407 Alternate policies:		
(c) Failure to file agreement or other document or provide timely notice or revocation	2,500	5,000
Subpart F—Pre-Employment Tests		
219.501 Pre-employment tests:		
(a) Failure to perform pre-employment drug test before first time employee performs covered service	2,500	5,000
Subpart G—Random Testing Programs		
219.601 Railroad random drug programs:		
(a)(1) Failure to file a random program	2,500	5,000

PENALTY SCHEDULE [1]—Continued

Section [2]	Violation	Willful violation
(a)(2) Failure to file amendment to program	2,500	5,000
(b) Failure to meet random testing criteria	2,500	5,000
(b)(1)(i) Failure to use a neutral selection process	2,500	5,000
(b)(2)(i)(B) Testing not spread throughout the year	2,500	5,000
(b)(3) Testing not distributed throughout the day	2,500	5,000
(b)(4) Advance notice provided to employee	2,500	5,000
(b)(6) Testing when employee not on duty	2,500	5,000
219.601A Failure to include covered service employee in pool	2,500	5,000
219.602 Administrator's determination of drug testing rate:		
(f) Total number of tests below minimum random drug testing rate	2,500	5,000
219.603 Participation in drug testing:		
Failure to document reason for not testing selected employee	2,500	5,000
219.607 Railroad random alcohol programs:		
(a)(1) Failure to file a random alcohol program	2,500	5,000
(a)(2) Failure to file amendment to program	2,500	5,000
(b) Failure to meet random testing criteria	2,500	5,000
(b)(1) Failure to use a neutral selection process	2,500	5,000
(b)(5) Testing when employee not on duty	2,500	5,000
(b)(8) Advance notice provided to employee	2,500	5,000
219.607A Failure to include covered service employee in pool	2,500	5,000
219.608 Administrator's determination of random alcohol testing rate:		
(e) Total number of tests below minimum random alcohol testing rate	2,500	5,000
219.609 Participation in alcohol testing:		
Failure to document reason for not testing selected employee	2,500	5,000
Subpart H—Drug and Alcohol Testing Procedures		
219.701 Standards for drug and alcohol testing:		
(a) Failure to comply with Part 40 procedures in Subpart B, D, F, or G testing	−5,000	−7,500
(b) Testing not performed in a timely manner	2,500	5,000
Subpart I—Annual Report		
219.801 Reporting alcohol misuse prevention program results in a management information system:		
(a) Failure to submit MIS report on time	2,500	5,000
(c) Failure to submit accurate MIS report	2,500	5,000
(d) Failure to include required data	2,500	5,000
219.803 Reporting drug misuse prevention program results in a management information system:		
(c) Failure to submit accurate MIS report	2,500	5,000
(d) Failure to submit MIS report on report	2,500	5,000
(e) Failure to include required data	2,500	5,000
Subpart J—Recordkeeping Requirements		
219.901 Retention of Alcohol Testing Records:		
(a) Failure to maintain records required to be kept by Part 40	2,500	5,000
(b) Failure to maintain records required to be kept for five years	2,500	5,000
(c) Failure to maintain records required to be kept for two years	2,500	5,000
219.903 Retention of Drug Testing Records:		
(a) Failure to maintain records required to be kept by Part 40	2,500	5,000
(b) Failure to maintain records required to be kept for five years	2,500	5,000
(c) Failure to maintain records required to be kept for two years	2,500	5,000
219.905 Access to facilities and records:		
(a) Failure to release records in this subpart in accordance with Part 40	2,500	5,000
(b) Failure to permit access to facilities	2,500	5,000
(c) Failure to provide access to results of railroad alcohol and drug testing programs	2,500	5,000

[1] A penalty may be assessed against an individual only for a willful violation. The FRA Administrator reserves the right to assess a penalty of up to $27,000 for any violation, including ones not listed in this penalty schedule, where circumstances warrant. See 49 CFR Part 209, appendix A.

[2] The penalty schedule uses section numbers from 49 CFR Part 219; and if more than one item is listed as a type of violation of a given section, each item is also designated by a "penalty code" (e.g., "A"), which is used to facilitate assessment of civil penalties. For convenience, penalty citations will cite the CFR section and the penalty code, if any (e.g., "Sec. 219.11A") FRA reserves the right, should litigation become necessary, to substitute in its complaint the CFR citation in place of the combined CFR and penalty code citation.

[66 FR 41973, Aug. 9, 2001, as amended at 69 FR 30593, May 28, 2004]

APPENDIX B TO PART 219—DESIGNATION OF LABORATORY FOR POST-ACCIDENT TOXICOLOGICAL TESTING

The following laboratory is currently designated to conduct post-accident toxicological analysis under subpart C of this part: Northwest Toxicology/LabOne, Hayes Building, Suite #C, 2282 South Presidents Drive, West Valley City, UT 84120, Telephone: (800) 322–3361 or (801) 293–2300 (Day), (801) 244–5599 (Night/Weekend).

[70 FR 16966, Apr. 4, 2005]

APPENDIX C TO PART 219—POST-ACCIDENT TESTING SPECIMEN COLLECTION

1.0 *General.*

This appendix prescribes procedures for collection of specimens for mandatory post-accident testing pursuant to Subpart C of this part. Collection of blood and urine specimens is required to be conducted at an independent medical facility.

(*Surviving Employees*)

2.0 *Surviving Employees.*

This unit provides detailed procedures for collecting post-accident toxicological specimens from surviving employees involved in train accidents and train incidents, as required by Subpart C of this part. Subpart C specifies qualifying events and employees required to be tested.

2.1 *Collection Procedures; General.*

a. All forms and supplies necessary for collection and transfer of blood and urine specimens for three surviving employees can be found in the FRA post-accident shipping box, which is made available to the collection site by the railroad representative.

b. Each shipping box contains supplies for blood/urine collections from three individuals, including instructions and necessary forms. The railroad is responsible for ensuring that materials are fresh, complete and meet FRA requirements.

2.1.1 *Responsibility of the Railroad Representative.*

a. In the event of an accident/incident for which testing is required under Subpart C of this part, the railroad representative shall follow the designated set of instructions, and, upon arrival at the independent medical facility, promptly present to the collection facility representative a post-accident shipping box or boxes with all remaining sets of instructions. (Each box contains supplies to collect specimens from three employees.) The railroad representative shall request the collection facility representative to review the instructions provided and, through qualified personnel, provide for collection of the specimens according to the procedures set out.

b. The railroad representative shall undertake the following additional responsibilities—

1. Complete Form FRA 6180.73 (revised), Accident Information Required for Post-Accident Toxicological Testing (49 CFR Part 219), describing the testing event and identifying the employees whose specimens are to be deposited in the shipping box.

2. As necessary to verify the identity of individual employees, affirm the identity of each employee to the medical facility personnel.

3. Consistent with the policy of the collection facility, monitor the progress of the collection procedure.

Warning: Monitor but do not directly observe urination or otherwise disturb the privacy of urine or blood collection. Do not handle specimen containers, bottles or tubes (empty or full). Do not become part of the collection process.

2.1.2 *Employee Responsibility.*

a. An employee who is identified for post-accident toxicological testing shall cooperate in testing as required by the railroad and personnel of the independent medical facility. Such cooperation will normally consist of the following, to be performed as requested:

1. Provide a blood specimen, which a qualified medical professional or technician will draw using a single-use sterile syringe. The employee should be seated for this procedure.

2. Provide, in the privacy of an enclosure, a urine specimen into a plastic collection cup. Deliver the cup to the collector.

3. Do not let the blood and urine specimens that you provided leave your sight until they have been properly sealed and initialed by you.

4. Certify the statement in Step 4 of the Post-Accident Testing Blood/Urine Custody and Control Form (49 CFR 219) (Form FRA F 6180.74 (revised)).

5. If required by the medical facility, complete a separate consent form for taking of the specimens and their release to FRA for analysis under the FRA rule.

NOTE: The employee may not be required to complete any form that contains any waiver of rights the employee may have in the employment relationship or that releases or holds harmless the medical facility with respect to negligence in the collection.

2.2 *The Collection.*

Exhibit C–1 contains instructions for collection of specimens for post-accident toxicology from surviving employees. These instructions shall be observed for each collection. Instructions are also contained in each

post-accident shipping box and shall be provided to collection facility personnel involved in the collection and/or packaging of specimens for shipment.

(Post Mortem Collection)

3.0 *Fatality.*

This unit provides procedures for collecting post-accident body fluid/tissue specimens from the remains of employees killed in train accidents and train incidents, as required by Subpart C of this part. Subpart C specifies qualifying events and employees required to be tested.

3.1 *Collection.*

In the event of a fatality for which testing is required under Subpart C of this part, the railroad shall promptly make available to the custodian of the remains a post-accident shipping box. The railroad representative shall request the custodian to review the instructions contained in the shipping box and, through qualified medical personnel, to provide the specimens as indicated.

(Surviving Employees and Fatalities)

4.0 *Shipment.*

a. The railroad is responsible for arranging overnight transportation of the sealed shipping box containing the specimens. When possible without incurring delay, the box should be delivered directly from the collection personnel providing the specimens to an overnight express service courier. If it becomes necessary for the railroad to transport the box from point of collection to point of shipment, then—

1. Individual kits and the shipping box shall be sealed by collection personnel before the box is turned over to the railroad representative;

2. The railroad shall limit the number of persons handling the shipping box to the minimum necessary to provide for transportation;

3. If the shipping box cannot immediately be delivered to the express carrier for transportation, it shall be maintained in secure temporary storage; and

4. The railroad representatives handling the box shall document chain of custody of the shipping box and shall make available such documentation to FRA on request.

EXHIBIT C–1—INSTRUCTIONS FOR COLLECTION OF BLOOD AND URINE SPECIMENS: MANDATORY POST-ACCIDENT TOXICOLOGICAL TESTING

A. Purpose

These instructions are for the use of personnel of collection facilities conducting collection of blood and urine specimens from surviving railroad employees following railroad accidents and casualties that qualify for mandatory alcohol/drug testing. The Federal Railroad Administration appreciates the participation of medical facilities in this important public safety program.

B. Prepare for Collection

a. Railroad employees have consented to provision of specimens for analysis by the Federal Railroad Administration as a condition of employment (49 CFR 219.11). A private, controlled area should be designated for collection of specimens and completion of paperwork.

b. Only one specimen should be collected at a time, with each employee's blood draw or urine collection having the complete attention of the collector until the specific specimen has been labeled, sealed and documented.

c. Please remember two critical rules for the collections:

d. All labeling and sealing must be done in the sight of the donor, with the specimen never having left the donor's presence until the specimen has been labeled, sealed and initialed by the donor.

e. Continuous custody and control of blood and urine specimens must be maintained and documented on the forms provided. In order to do this, it is important for the paperwork and the specimens to stay together.

f. To the extent practical, blood collection should take priority over urine collection. To limit steps in the chain of custody, it is best if a single collector handles both collections from a given employee.

g. You will use a single Post-Accident Testing Blood/Urine Custody and Control Form (FRA Form 6108.74 (revised)), consisting of six Steps to complete the collection for each employee. We will refer to it as the Control Form.

C. Identify the Donor

a. The employee donor must provide photo identification to each collector, or lacking this, be identified by the railroad representative.

b. The donor should remove all unnecessary outer garments such as coats or jackets, but may retain valuables, including a wallet. Donors should not be asked to disrobe, unless necessary for a separate physical examination required by the attending physician.

D. Draw Blood

a. Assemble the materials for collecting blood from each employee: two 10 ml grey-stoppered blood tubes and the Control Form.

b. Ask the donor to complete STEP 1 on the Control Form.

c. With the donor seated, draw two (2) 10 ml tubes of blood using standard medical procedures (sterile, single-use syringe into evacuated gray-top tubes provided). CAUTION: Do not use alcohol or an alcohol-based swab to cleanse the venipuncture site.

d. Once both tubes are filled and the site of venipuncture is protected, immediately—

1. Seal and label each tube by placing a numbered blood specimen label from the label set on the Control Form over the top of the tube and securing it down the sides.

2. Ask the donor to initial each label. Please check to see that the initials match the employee's name and note any discrepancies in the ''Remarks'' block of the Control Form.

3. As collector, sign and date each blood tube label at the place provided.

4. Skip to STEP 5 and initiate chain of custody for the blood tubes by filling out the first line of the block to show receipt of the blood specimens from the donor.

5. Complete STEP 2 on the form.

6. Return the blood tubes into the individual kit. Keep the paperwork and specimens together. If another collector will be collecting the urine specimen from this employee, transfer both the form and the individual kit with blood tubes to that person, showing the transfer of the blood tubes on the second line of STEP 5 (the chain of custody block).

E. Collect Urine

a. The urine collector should assemble at his/her station the materials for collecting urine from each employee: one plastic collection cup with temperature device affixed enclosed in a heat-seal bag (with protective seal intact), two 90 ml urine specimen bottles with caps and one biohazard bag (with absorbent) also enclosed in a heat-seal bag (with protective seal intact), and the Control Form. Blood specimens already collected must remain in the collector's custody and control during this procedure.

b. After requiring the employee to wash his/her hands, the collector should escort the employee directly to the urine collection area. To the extent practical, all sources of water in the collection area should be secured and a bluing agent (provided in the box) placed in any toilet bowl, tank, or other standing water.

c. The employee will be provided a private place in which to void. Urination will not be directly observed. If the enclosure contains a source of running water that cannot be secured or any material (soap, etc.) that could be used to adulterate the specimen, the collector should monitor the provision of the specimen from outside the enclosure. Any unusual behavior or appearance should be noted in the remarks section of the Control Form or on the back of that form.

d. The collector should then proceed as follows:

e. Unwrap the collection cup in the employee's presence and hand it to the employee (or allow the employee to unwrap it).

f. Ask the employee to void at least 60 ml into the collection cup (at least to the line marked).

g. Leave the private enclosure.

IF THERE IS A PROBLEM WITH URINATION OR Specimen QUANTITY, SEE THE ''TROUBLE BOX'' AT THE BACK OF THESE INSTRUCTIONS.

h. Once the void is complete, the employee should exit the private enclosure and deliver the specimen to the collector. Both the collector and the employee must proceed immediately to the labeling/sealing area, with the specimen never leaving the sight of the employee before being sealed and labeled.

i. Upon receipt of the specimen, proceed as follows:

1. In the full view of the employee, remove the wrapper from the two urine specimen bottles. Transfer the urine from the collection cup into the specimen bottles (at least 30 ml in bottle A and at least 15 ml in bottle B).

2. As you pour the specimen into the specimen bottles, please inspect for any unusual signs indicating possible adulteration or dilution. Carefully secure the tops. Note any unusual signs under ''Remarks'' at STEP 3 of the Control Form.

3. Within 4 minutes after the void, measure the temperature of the urine by reading the strip on the bottle. Mark the result at STEP 3 of the Control Form.

IF THERE IS A PROBLEM WITH THE URINE Specimen, SEE THE ''TROUBLE BOX'' AT THE BACK OF THESE INSTRUCTIONS.

4. Remove the urine bottle labels from the Control Form. The labels are marked ''A'' and ''B.'' Place each label as marked over the top of its corresponding bottle, and secure the label to the sides of the bottle.

5. Ask the donor to initial each label. Please check to see that the initials match the employee name and note any discrepancy in the ''Remarks'' block of STEP 3.

6. As collector, sign and date each urine label.

7. Skip to STEP 5 and initiate chain-of-custody by showing receipt of the urine specimens from the donor. (If you collected the blood, a check under ''urine'' will suffice. If someone else collected the blood, first make sure transfer of the blood to you is documented. Then, using the next available line, show ''Provide specimens'' under purpose, ''Donor'' under ''released by,'' check under ''urine'' and place your name, signature and date in the space provided.)

8. Complete the remainder of STEP 3 on the Control Form.

9. Have the employee complete STEP 4 on the Control Form.

10. Place the filled urine bottles in the individual employee kit. Keep the paperwork and specimens together. If another collector

will be collecting the blood specimen from this employee, transfer both the form and the kit to that person, showing the transfer of the urine specimens on the next available line of STEP 5 (the chain of custody block).

F. Seal the Individual Employee Kit

a. The blood and urine specimens have now been collected for this employee. The blood/urine specimens will now be sealed into the individual employee kit, while all paperwork will be retained for further completion. After rechecking to see that each specimen is properly labeled and initialed, close the plastic bag to contain any leakage in transportation, and apply the kit security seal to the small individual kit. As collector, sign and date the kit seal.

b. Before collecting specimens from the next employee, complete the next line on the chain-of-custody block showing release of the blood and urine by yourself for the purpose of ''Shipment'' and receipt by the courier service or railroad representative that will provide transportation of the box, together with the date.

G. Complete Treatment Information

Complete STEP 6 of the Control Form. Mark the box if a breath alcohol test was conducted under FRA authority.

H. Prepare the Box for Shipment

a. Sealed individual employee kits should be retained in secure storage if there will be a delay in preparation of the shipping box. The shipping box shall be prepared and sealed by a collection facility representative as follows:

1. Inspect STEP 5 of each Control Form to ensure chain-of-custody is continuous and complete for each fluid (showing specimens released for shipment). Retain the medical facility copy of each Control Form and the Accident Information form for your records.

2. Place sealed individual employee kits in the shipping box. Place all forms in zip-lock bag and seal securely. Place bag with forms and unused supplies in shipping box.

3. Affix the mailing label provided to the outside of the shipping box.

I. Ship the Box

a. The railroad must arrange to have the box shipped overnight air express or (if express service is unavailable) by air freight, prepaid, to FRA's designated laboratory. Whenever possible without incurring delay, the collector should deliver the box directly into the hands of the express courier or air freight representative.

b. Where courier pickup is not immediately available at the collection facility where the specimens are taken, the railroad is required to transport the shipping box for expeditious shipment by air express, air freight or equivalent means.

c. *If the railroad is given custody of the box to arrange shipment*, please record the name of the railroad official taking custody on the copy of Form 6180.73 retained by the collection site.

''TROUBLE BOX''

1. Problem: *The employee claims an inability to urinate, either because he/she has recently voided or because of anxiety concerning the collection.*

Action: The employee may be offered moderate quantities of liquid to assist urination. If the employee continues to claim inability after 4 hours, the urine collection should be discontinued, but the blood specimens should be forwarded and all other procedures followed. Please note in area provided for remarks what explanation was provided by the employee.

2. Problem: *The employee cannot provide approximately 60 ml. of specimen.*

Action: The employee should remain at the collection facility until as much as possible of the required amount can be given (up to 4 hours). The employee should be offered moderate quantities of liquids to aid urination. The first bottle, if it contains any quantity of urine, should be sealed and securely stored with the blood tubes and Control Form pending shipment. A second bottle should then be used for the subsequent void (using a second Control Form with the words ''SECOND VOID—FIRST Specimen INSUFFICIENT'' in the remarks block and labels from that form). However, if after 4 hours the donor's second void is also insufficient or contains no more than the first insufficient void, discard the second void and send the first void to the laboratory.

3. Problem: *The urine temperature is outside the normal range* of 32 deg.−38 deg.C/90 deg.−100 deg.F, and a suitable medical explanation cannot be provided by an oral temperature or other means; or

4. Problem: *The collector observes conduct clearly and unequivocally indicating an attempt to substitute or adulterate the specimen* (e.g., substitute urine in plain view, blue dye in specimen presented, etc.) and a collection site supervisor or the railroad representative agrees that the circumstances indicate an attempt to tamper with the specimen.

Action (for either Problem No. 3 or Problem No. 4): Document the problem on the Control Form.

i. If the collection site supervisor or railroad representative concurs that the temperature of the specimen, or other clear and unequivocal evidence, indicates a possible attempt to substitute or alter the specimen, another void must be taken under direct observation by a collector of the same gender.

ii. If a collector of the same sex is not available, do NOT proceed with this step.

iii. If a collector of the same gender is available, proceed as follows: A new Control Form must be initiated for the second void. The original suspect specimen should be marked ''Void'' and the follow-up void should be marked ''Void 2,'' with both voids being sent to the laboratory and the incident clearly detailed on the Control Form.

EXHIBIT C–2—INSTRUCTIONS FOR COLLECTION OF POST MORTEM SPECIMENS: EMPLOYEE KILLED IN A RAILROAD ACCIDENT/INCIDENT

To the Medical Examiner, Coroner, or Pathologist:

a. In compliance with Federal safety regulations (49 CFR Part 219), a railroad representative has requested that you obtain specimens for toxicology from the remains of a railroad employee who was killed in a railroad accident or incident. The deceased consented to the taking of such specimens, as a matter of Federal law, by performing service on the railroad (49 CFR 219.11(f)).

b. Your assistance is requested in carrying out this program of testing, which is important to the protection of the public safety and the safety of those who work on the railroads.

A. Materials:

The railroad will provide you a post-accident shipping box that contains necessary supplies. If the box is not immediately available, please proceed using supplies available to you that are suitable for forensic toxicology.

B. Specimens requested, in order of preference:

a. Blood—20 milliliters or more. Preferred sites: intact femoral vein or artery or peripheral vessels (up to 10 ml, as available) and intact heart (20 ml). Deposit blood in gray-stopper tubes individually by site and shake to mix specimen and preservative.

NOTE: If uncontaminated blood is not available, bloody fluid or clots from body cavity may be useful for qualitative purposes; but do not label as blood. Please indicate source and identity of specimen on label of tube.

b. Urine—as much as 100 milliliters, if available. Deposit into plastic bottles provided.

c. Vitreous fluid—all available, deposited into smallest available tube (e.g., 3 ml) with 1% sodium fluoride, or gray-stopper tube (provided). Shake to mix specimen and preservative.

d. If available at autopsy, organs—50 to 100 grams each of two or more of the following in order preference, as available: liver, bile, brain, kidney, spleen, and/or lung. Specimens should be individually deposited into ziplock bags or other clean, single use containers suitable for forensic specimens.

e. If vitreous or urine is not available, please provide—

1. Spinal fluid—all available, in 8 ml container (if available) with sodium fluoride or in gray-stopper tube; or, if spinal fluid cannot be obtained,

2. Gastric content—up to 100 milliliters, as available, into plastic bottle.

C. Specimen collection:

a. Sampling at time of autopsy is preferred so that percutaneous needle puncturing is not necessary. However, if autopsy will not be conducted or is delayed, please proceed with sampling.

b. Blood specimens should be taken by sterile syringe and deposited directly into evacuated tube, if possible, to avoid contamination of specimen or dissipation of volatiles (ethyl alcohol).

NOTE: If only cavity fluid is available, please open cavity to collect specimen. Note condition of cavity.

c. Please use smallest tubes available to accommodate available quantity of fluid specimen (with 1% sodium fluoride).

D. Specimen identification, sealing:

a. As each specimen is collected, seal each blood tube and each urine bottle using the respective blood tube or urine bottle using the identifier labels from the set provided with the Post-Accident Testing Blood/Urine Custody and Control Form (49 CFR part 219) (Form FRA F 6180.74 (revised)). Make sure the unique identification number on the labels match the pre-printed number on the Control Form. Please label other specimens with name and specimen set identification numbers. You may use labels and seals from any of the extra forms, but annotate them accordingly.

b. Annotate each label with specimen description and source (as appropriate) (e.g., blood, femoral vein).

c. Please provide copy of any written documentation regarding condition of body and/or sampling procedure that is available at the time specimens are shipped.

E. Handling:

a. If specimens cannot be shipped immediately as provided below, specimens other than blood may be immediately frozen. Blood specimens should be refrigerated, but not frozen.

b. All specimens and documentation should be secured from unauthorized access pending delivery for transportation.

F. Information:

a. If the railroad has not already done so, please place the name of the subject at the top of the Control Form (STEP 1). You are requested to complete STEP 2 of the form,

annotating it by writing the word ''FATALITY,'' listing the specimens provided, providing any further information under ''Remarks'' or at the bottom of the form. If it is necessary to transfer custody of the specimens from the person taking the specimens prior to preparing the box for shipment, please use the blocks provided in STEP 5 to document transfer of custody.

b. The railroad representative will also provide Accident Information Required for Post-Accident Toxicological Testing (49 CFR Part 219), Form FRA 6180.73 (revised). Both forms should be placed in the shipping box when completed; but you may retain the designated medical facility copy of each form for your records.

G. Packing the shipping box:

a. Place urine bottles and blood tubes in the sponge liner in the individual kit, close the biohazard bag zipper, close the kit and apply the kit custody seal to the kit. You may use additional kits for each tissue specimen, being careful to identify specimen by tissue, name of deceased, and specimen set identification number. Apply kit security seals to individual kits and initial across all seals. Place all forms in the zip-lock bag and seal securely.

b. Place the bag in the shipping box. Do not put forms in with the specimens. Seal the shipping box with the seal provided and initial and date across the seal.

c. Affix the mailing label to the outside of the box.

H. Shipping the box:

a. The railroad must arrange to have the box shipped overnight air express or (if express service is unavailable) by air freight, prepaid, to FRA's designated laboratory. When possible, but without incurring delay, deliver the sealed shipping box directly to the express courier or the air freight representative.

b. If courier pickup is not immediately available at your facility, the railroad is required to transport the sealed shipping box to the nearest point of shipment via air express, air freight or equivalent means.

c. *If the railroad receives the sealed shipping box to arrange shipment,* please record under ''Supplemental Information'' on the Control Form, the name of the railroad official taking custody.

I. Other:

FRA requests that the person taking the specimens annotate the Control Form under ''Supplemental Information'' if additional toxicological analysis will be undertaken with respect to the fatality. FRA reports are available to the coroner or medical examiner on request.

PART 220—RAILROAD COMMUNICATIONS

Subpart A—General

Sec.
220.1 Scope.
220.2 Preemptive effect.
220.3 Application.
220.5 Definitions.
220.7 Penalty.
220.8 Waivers.
220.9 Requirements for trains.
220.11 Requirements for roadway workers.
220.13 Reporting emergencies.

Subpart B—Radio and Wireless Communication Procedures

220.21 Railroad operating rules; radio communications; recordkeeping.
220.23 Publication of radio information.
220.25 Instruction and operational testing of employees.
220.27 Identification.
220.29 Statement of letters and numbers in radio communications.
220.31 Initiating a radio transmission.
220.33 Receiving a radio transmission.
220.35 Ending a radio transmission.
220.37 Testing radio and wireless communication equipment.
220.38 Communication equipment failure.
220.39 Continuous radio monitoring.
220.41 [Reserved]
220.43 Radio communications consistent with federal regulations and railroad operating rules.
220.45 Radio communication shall be complete.
220.47 Emergency radio transmissions.
220.49 Radio communication used in shoving, backing or pushing movements.
220.51 Radio communications and signal indications.
220.61 Radio transmission of mandatory directives.

APPENDIX A TO PART 220—RECOMMENDED PHONETIC ALPHABET
APPENDIX B TO PART 220—RECOMMENDED PRONUNCIATION OF NUMERALS
APPENDIX C TO PART 220—SCHEDULE OF CIVIL PENALTIES

AUTHORITY: 49 U.S.C. 20102–20103, 20107, 21301–21302, 21304, 21311; 28 U.S.C. 2461, note; and 49 CFR 1.49.

SOURCE: 63 FR 47195, Sept. 4, 1998, unless otherwise noted.

Subpart A—General

§ 220.1 Scope.

This part prescribes minimum requirements governing the use of wireless communications in connection with railroad operations. So long as these minimum requirements are met, railroads may adopt additional or more stringent requirements.

§ 220.2 Preemptive effect.

Under 49 U.S.C. 20106 (formerly section 205 of the Federal Railroad Safety Act of 1970, 45 U.S.C. 434), issuance of the regulations in this part preempts any State law, rule, regulation, order, or standard covering the same subject matter, except a provision necessary to eliminate or reduce an essentially local safety hazard that is not incompatible with this part and that does not unreasonably burden interstate commerce.

§ 220.3 Application.

(a) Except as provided in paragraph (b) of this section, this part applies to railroads that operate trains or other rolling equipment on standard gage track which is part of the general railroad system of transportation.

(b) This part does not apply to:

(1) A railroad that operates only on track inside an installation which is not part of the general railroad system of transportation; or

(2) Rapid transit operations in an urban area that are not connected with the general railroad system of transportation.

§ 220.5 Definitions.

As used in this part, the term:

Adjacent tracks means two or more tracks with track centers spaced less than 25 feet apart.

Control center means the locations on a railroad from which the railroad issues instructions governing railroad operations.

Division headquarters means the location designated by the railroad where a high-level operating manager (e.g., a superintendent, division manager, or equivalent), who has jurisdiction over a portion of the railroad, has an office.

Employee means an individual who is engaged or compensated by a railroad or by a contractor to a railroad, who is authorized by a railroad to use its wireless communications in connection with railroad operations.

Immediate access to a radio means a radio on the employee's person, or sufficiently close to the employee to allow the employee to make and receive radio transmissions.

Joint operations means rail operations conducted by more than one railroad on the track of a railroad subject to the requirements of § 220.9(a), except as necessary for the purpose of interchange.

Locomotive means a piece of on-track equipment other than hi-rail, specialized maintenance, or other similar equipment—

(1) With one or more propelling motors designed for moving other equipment;

(2) With one or more propelling motors designed to carry freight or passenger traffic, or both; or

(3) Without propelling motors but with one or more control stands.

Lone worker means an individual roadway worker who is not being afforded on-track safety by another roadway worker, who is not a member of a roadway work group, and who is not engaged in a common task with another roadway worker.

Mandatory directive means any movement authority or speed restriction that affects a railroad operation.

Railroad operation means any activity which affects the movement of a train, locomotive, on-track equipment, or track motor car, singly or in combination with other equipment, on the track of a railroad.

Roadway worker means any employee of a railroad, or of a contractor to a railroad, whose duties include inspection, construction, maintenance or repair of railroad track, bridges, roadway, signal and communication systems, electric traction systems, roadway facilities or roadway maintenance machinery on or near track or with the potential of fouling a track, and flagmen and watchmen/lookouts.

System headquarters means the location designated by the railroad as the general office for the railroad system.

Train means one or more locomotives coupled with or without cars, requiring an air brake test in accordance with 49

CFR part 232 or part 238, except during switching operations or where the operation is that of classifying and assembling rail cars within a railroad yard for the purpose of making or breaking up trains.

Working radio means a radio that can communicate with the control center of the railroad (through repeater stations, if necessary to reach the center) from any location within the rail system, except:

(1) Tunnels or other localized places of extreme topography, and

(2) Temporary lapses of coverage due to atmospheric or topographic conditions. In the case of joint operations on another railroad, the radio must be able to reach the control center of the host railroad.

Working wireless communications means the capability to communicate with either a control center or the emergency responder of a railroad through such means as radio, portable radio, cellular telephone, or other means of two-way communication, from any location within the rail system, except:

(1) Tunnels or other localized places of extreme topography, and

(2) Temporary lapses of coverage due to atmospheric or topographic conditions. In the case of joint operations on another railroad, the radio must be able to reach the control center of the host railroad.

[63 FR 47195, Sept. 4, 1998, as amended at 65 FR 41305, July 3, 2000]

§ 220.7 Penalty.

Any person (including but not limited to a railroad; any manager, supervisor, official, or other employee or agent of a railroad; any owner, manufacturer, lessor, or lessee of railroad equipment, track, or facilities; any independent contractor providing goods or services to a railroad; and any employee of such owner, manufacturer, lessor, lessee, or independent contractor) who violates any requirement of this part or causes the violation of any such requirement is subject to a civil penalty of at least $550 and not more than $16,000 per violation, except that: Penalties may be assessed against individuals only for willful violations; where a grossly negligent violation or a pattern of repeated violations has created an imminent hazard of death or injury, or has caused death or injury, a penalty not to exceed $27,000 per violation may be assessed; and the standard of liability for a railroad will vary depending upon the requirement involved. Each day a violation continues shall constitute a separate offense. (See appendix C to this part for a statement of agency civil penalty policy.)

[63 FR 47195, Sept. 4, 1998, as amended at 69 FR 30593, May 28, 2004; 72 FR 51196, Sept. 6, 2007]

§ 220.8 Waivers.

(a) Any person subject to a requirement of this part may petition the Administrator for a waiver of compliance with such requirement. The filing of such a petition does not affect that person's responsibility for compliance with that requirement while the petition is being considered.

(b) Each petition for waiver must be filed in the manner and contain the information required by part 211 of this chapter.

(c) If the Administrator finds that a waiver of compliance is in the public interest and is consistent with railroad safety, the Administrator may grant the waiver subject to any conditions the Administrator deems necessary.

§ 220.9 Requirements for trains.

(a) Except as provided for in paragraphs (b)(1) through (4) of this section, on and after July 1, 1999, each occupied controlling locomotive in a train shall have a working radio, and each train shall also have communications redundancy. For purposes of this section, ''communications redundancy'' means a working radio on another locomotive in the consist or other means of working wireless communications.

(b) On and after July 1, 2000, the following requirements apply to a railroad that has fewer than 400,000 annual employee work hours:

(1) Any train that transports passengers shall be equipped with a working radio in the occupied controlling locomotive and with redundant working wireless communications capability in the same manner as provided in paragraph (a) of this section.

(2) Any train that operates at greater than 25 miles per hour; or engages in joint operations on track where the maximum authorized speed for freight trains exceeds 25 miles per hour; or engages in joint operations on a track that is adjacent to and within 30 feet measured between track center lines of another track on which the maximum authorized speed for passenger trains exceeds 40 miles per hour, shall be equipped with a working radio in the occupied controlling locomotive.

(3) Any train that engages in joint operations, where the maximum authorized speed of the track is 25 miles per hour or less, shall be equipped with working wireless communications in the occupied controlling locomotive.

(4) Any train not described in paragraph (b) of this section that transports hazardous material required to be placarded under the provisions of part 172 of this title shall be equipped with working wireless communications in the occupied controlling locomotive.

§ 220.11 Requirements for roadway workers.

(a) On and after July 1, 1999, the following requirements apply to a railroad that has 400,000 or more annual employee work hours:

(1) Maintenance-of-way equipment operating without locomotive assistance between work locations shall have a working radio on at least one such unit in each multiple piece of maintenance-of-way equipment traveling together under the same movement authority. The operators of each additional piece of maintenance-of-way equipment shall have communications capability with each other.

(2) Each maintenance-of-way work group shall have intra-group communications capability upon arriving at a work site.

(b) On and after July 1, 1999, each employee designated by the employer to provide on-track safety for a roadway work group or groups, and each lone worker, shall be provided, and where practicable, shall maintain immediate access to a working radio. When immediate access to a working radio is not available, the employee responsible for on-track safety or lone worker shall be equipped with a radio capable of monitoring transmissions from train movements in the vicinity. A railroad with fewer than 400,000 annual employee work hours may provide immediate access to working wireless communications as an alternative to a working radio.

(c) This section does not apply to:

(1) Railroads which have fewer than 400,000 annual employee work hours, and which do not operate trains in excess of 25 miles per hour; or

(2) Railroad operations where the work location of the roadway work group or lone worker:

(i) Is physically inaccessible to trains; or

(ii) Has no through traffic or traffic on adjacent tracks during the period when roadway workers will be present.

§ 220.13 Reporting emergencies.

(a) Employees shall immediately report by the quickest means available derailments, collisions, storms, washouts, fires, obstructions to tracks, and other hazardous conditions which could result in death or injury, damage to property or serious disruption of railroad operations.

(b) In reporting emergencies, employees shall follow:

(1) The procedures of § 220.47 when using a radio; or

(2) The procedures specified for reporting emergencies in the railroad's timetables or timetable special instructions, when using another means of wireless communications.

(c) Employees shall describe as completely as possible the nature, degree and location of the hazard.

(d) An alternative means of communications capability shall be provided whenever the control center is unattended or unable to receive radio transmissions during a period in which railroad operations are conducted.

Subpart B—Radio and Wireless Communication Procedures

§ 220.21 Railroad operating rules; radio communications; recordkeeping.

(a) The operating rules of each railroad with respect to radio communications shall conform to the requirements of this part.

(b) Thirty days before commencing to use radio communications in connection with railroad operations each railroad shall retain one copy of its current operating rules with respect to radio communications at the locations prescribed in paragraphs (b) (1) and (b)(2) of this section. Each amendment to these operating rules shall be filed at such locations within 30 days after it is issued. These records shall be made available to representatives of the Federal Railroad Administration for inspection and photocopying during normal business hours.

(1) Each Class I railroad, each Class II railroad, each railroad providing intercity rail passenger service, and each railroad providing commuter service in a metropolitan or suburban area shall retain such rules at each of its division headquarters and at its system headquarters; and (2) Each Class III railroad and any other railroad subject to this part but not subject to paragraph (b)(1) of this section shall retain such rules at the system headquarters of the railroad.

(c) For purposes of this section, the terms Class I railroad, Class II railroad, and Class III railroad have the meaning given these terms in 49 CFR Part 1201.

§ 220.23 Publication of radio information.

Each railroad shall designate where radio base stations are installed, where wayside stations may be contacted, and the appropriate radio channels used by these stations in connection with railroad operations by publishing them in a timetable or special instruction. The publication shall indicate the periods during which base and wayside radio stations are operational.

§ 220.25 Instruction and operational testing of employees.

Each employee who a railroad authorizes to use a radio in connection with a railroad operation, shall be:

(a) Provided with a copy of the railroad's operating rules governing the use of radio communication in a railroad operation;

(b) Instructed in the proper use of radio communication as part of the program of instruction prescribed in § 217.11 of this chapter; and

(c) Periodically tested under the operational testing requirements in § 217.9 of this chapter.

§ 220.27 Identification.

(a) Except as provided in paragraph (c) of this section, the identification of each wayside, base or yard station shall include at least the following minimum elements, stated in the order listed:

(1) Name of railroad. An abbreviated name or initial letters of the railroad may be used where the name or initials are in general usage and are understood in the railroad industry; and

(2) Name and location of office or other unique designation.

(b) Except as provided in paragraph (c) of this section, the identification of each mobile station shall consist of the following elements, stated in the order listed:

(1) Name of railroad. An abbreviated name or initial letters of the railroad may be used where the name or initial letters are in general usage and are understood in the railroad industry;

(2) Train name (number), if one has been assigned, or other appropriate unit designation; and

(3) When necessary, the word ''locomotive'', ''motorcar'', or other unique identifier which indicates to the listener the precise mobile transmitting station.

(c) If positive identification is achieved in connection with switching, classification, and similar operations wholly within a yard, fixed and mobile units may use short identification after the initial transmission and acknowledgment consistent with applicable Federal Communications Commission regulations governing ''Station Identification''.

§ 220.29 Statement of letters and numbers in radio communications.

(a) If necessary for clarity, a phonetic alphabet shall be used to pronounce any letter used as an initial, except initial letters of railroads. See appendix A of this part for the recommended phonetic alphabet.

(b) A word which needs to be spelled for clarity, such as a station name,

shall first be pronounced, and then spelled. If necessary, the word shall be spelled again, using a phonetic alphabet.

(c) Numbers shall be spoken by digit, except that exact multiples of hundreds and thousands may be stated as such. A decimal point shall be indicated by the words ''decimal,'' ''dot,'' or ''point.'' (See appendix B to this part, for a recommended guide to the pronunciation of numbers.)

§ 220.31 Initiating a radio transmission.

BEFORE TRANSMITTING BY RADIO, AN EMPLOYEE SHALL:

(a) Listen to ensure that the channel on which the employee intends to transmit is not already in use;

(b) Identify the employee's station in accordance with the requirements of § 220.27; and

(c) Verify that the employee has made radio contact with the person or station with whom the employee intends to communicate by listening for an acknowledgment. If the station acknowledging the employee's transmission fails to identify itself properly, the employee shall require a proper identification before proceeding with the transmission.

§ 220.33 Receiving a radio transmission.

(a) Upon receiving a radio call, an employee shall promptly acknowledge the call, identifying the employee's station in accordance with the requirements of § 220.27 and stand by to receive. An employee need not attend the radio during the time that this would interfere with other immediate duties relating to the safety of railroad operations.

(b) An employee who receives a transmission shall repeat it to the transmitting party unless the communication:

(1) Relates to yard switching operations;

(2) Is a recorded message from an automatic alarm device; or

(3) Is general in nature and does not contain any information, instruction or advice which could affect the safety of a railroad operation.

§ 220.35 Ending a radio transmission.

(a) Except for transmissions relating to yard switching operations, at the close of each transmission to which a response is expected, the transmitting employee shall say ''over'' to indicate to the receiving employee that the transmission is ended.

(b) Except for transmissions relating to yard switching operations, at the close of each transmission to which no response is expected, the transmitting employee shall state the employee's identification followed by the word ''out'' to indicate to the receiving employee that the exchange of transmissions is complete.

§ 220.37 Testing radio and wireless communication equipment.

(a) Each radio, and all primary and redundant wireless communication equipment used under §§ 220.9 and 220.11, shall be tested as soon as practicable to ensure that the equipment functions as intended prior to the commencement of the work assignment.

(b) The test of a radio shall consist of an exchange of voice transmissions with another radio. The employee receiving the transmission shall advise the employee conducting the test of the clarity of the transmission.

§ 220.38 Communication equipment failure.

(a) Any radio or wireless communication device found not to be functioning as intended when tested pursuant to § 220.37 shall be removed from service and the dispatcher or other employee designated by the railroad shall be so notified as soon as practicable.

(b) If a radio or wireless communication device fails on the controlling locomotive en route, the train may continue until the earlier of—

(1) The next calendar day inspection, or

(2) The nearest forward point where the radio or wireless communication device can be repaired or replaced.

§ 220.39 Continuous radio monitoring.

Each radio used in a railroad operation shall be turned on to the appropriate channel as designated in § 220.23 and adjusted to receive communications.

§ 220.41 [Reserved]

§ 220.43 Radio communications consistent with federal regulations and railroad operating rules.

Radio communication shall not be used in connection with a railroad operation in a manner which conflicts with the requirements of this part, Federal Communication Commission regulations, or the railroad's operating rules. The use of citizen band radios for railroad operating purposes is prohibited.

§ 220.45 Radio communication shall be complete.

Any radio communication which is not fully understood or completed in accordance with the requirements of this part and the operating rules of the railroad, shall not be acted upon and shall be treated as though not sent.

§ 220.47 Emergency radio transmissions.

An initial emergency radio transmission shall be preceded by the word ''emergency,'' repeated three times. An emergency transmission shall have priority over all other transmissions and the frequency or channel shall be kept clear of non-emergency traffic for the duration of the emergency communication.

§ 220.49 Radio communication used in shoving, backing or pushing movements.

When radio communication is used in connection with the shoving, backing or pushing of a train, locomotive, car, or on-track equipment, the employee directing the movement shall specify the distance of the movement, and the movement shall stop in one-half the remaining distance unless additional instructions are received. If the instructions are not understood, the movement shall be stopped immediately and may not be resumed until the misunderstanding has been resolved, radio contact has been restored, or communication has been achieved by hand signals or other procedures in accordance with the operating rules of the railroad.

§ 220.51 Radio communications and signal indications.

(a) No information may be given by radio to a train or engine crew about the position or aspect displayed by a fixed signal. However, a radio may be used by a train crew member to communicate information about the position or aspect displayed by a fixed signal to other members of the same crew.

(b) Except as provided in the railroad's operating rules, radio communication shall not be used to convey instructions which would have the effect of overriding the indication of a fixed signal.

§ 220.61 Radio transmission of mandatory directives.

(a) Each mandatory directive may be transmitted by radio only when authorized by the railroad's operating rules. The directive shall be transmitted in accordance with the railroad's operating rules and the requirements of this part.

(b) The procedure for transmission of a mandatory directive is as follows:

(1) The train dispatcher or operator shall call the addressees of the mandatory directive and state the intention to transmit the mandatory directive.

(2) Before the mandatory directive is transmitted, the employee to receive and copy shall state the employee's name, identification, location, and readiness to receive and copy. An employee operating the controls of moving equipment shall not receive and copy mandatory directives. A mandatory directive shall not be transmitted to employees on moving equipment, if such directive cannot be received and copied without impairing safe operation of the equipment.

(3) A mandatory directive shall be copied in writing by the receiving employee in the format prescribed in the railroad's operating rules.

(4) After the mandatory directive has been received and copied, it shall be immediately repeated in its entirety. After verifying the accuracy of the repeated mandatory directive, the train dispatcher or operator shall then state the time and name of the employee designated by the railroad who is authorized to issue mandatory directives.

An employee copying a mandatory directive shall then acknowledge by repeating the time and name of the employee so designated by the railroad.

(5)(i) For train crews, before a mandatory directive is acted upon, the conductor and engineer shall each have a written copy of the mandatory directive and make certain that the mandatory directive is read and understood by all members of the crew who are responsible for the operation of the train. Mandatory directives which have been fulfilled or canceled shall be marked with an ''X'' or in accordance with the railroad's operating rules, and retained for the duration of the train crew's work assignment.

(ii) For on-track equipment, before a mandatory directive is acted upon, the employee responsible for on-track safety shall have a written copy of the mandatory directive, and make certain that the mandatory directive is acknowledged by all employees who are responsible for executing that mandatory directive. The employee responsible for on-track safety shall retain a copy of the mandatory directive while it is in effect.

(6) A mandatory directive which has not been completed or which does not comply with the requirements of the railroad's operating rules and this part, may not be acted upon and shall be treated as though not sent. Information contained in a mandatory directive may not be acted upon by persons other than those to whom the mandatory directive is addressed.

APPENDIX A TO PART 220—RECOMMENDED PHONETIC ALPHABET

A—ALFA
B—BRAVO
C—CHARLIE
D—DELTA
E—ECHO
F—FOXTROT
G—GOLF
H—HOTEL
I—INDIA
J—JULIET
K—KILO
L—LIMA
M—MIKE
N—NOVEMBER
O—OSCAR
P—PAPA
Q—QUEBEC
R—ROMEO
S—SIERRA
T—TANGO
U—UNIFORM
V—VICTOR
W—WHISKEY
X—XRAY
Y—YANKEE
Z—ZULU

The letter ''ZULU'' should be written as ''Z'' to distinguish it from the numeral ''2''.

EDITORIAL NOTE: At 63 FR 11621, Mar. 10, 1998, an amendment was published amending footnote 1 to appendix A of part 220. The amendment could not be incorporated because footnote 1 to appendix A of part 220 does not exist in 49 CFR parts 200 to 399, revised as of Oct. 1, 1997.

APPENDIX B TO PART 220—RECOMMENDED PRONUNCIATION OF NUMERALS

To distinguish numbers from similar sounding words, the word ''figures''should be used preceding such numbers. Numbers should be pronounced as follows:

Number	Spoken
0	ZERO.
1	WUN.
2	TOO.
3	THUH-REE-.
4	FO-WER.
5	FI-YIV.
6	SIX.
7	SEVEN.
8	ATE.
9	NINER.

(The figure ZERO should be written as ''0'' to distinguish it from the letter ''O''. The figure ONE should be underlined to distinguish it from the letter ''I''. When railroad rules require that numbers be spelled, these principles do not apply.)

The following examples illustrate the recommended pronunciation of numerals:

Number	Spoken
44	FO-WER FO-WER.
500	FI-YIV HUNDRED.
1000	WUN THOUSAND.
1600	WUN SIX HUNDRED.
14899	WUN FO-WER ATE NINER NINER.
20.3	TOO ZERO DECIMAL THUH-REE.

APPENDIX C TO PART 220—SCHEDULE OF CIVIL PENALTIES[1]

Section	Violation	Willful violation
220.9 Requirements for trains	$5,000	$7,500
220.11 Requirements for roadway workers	5,000	7,500
220.21 Railroad Operating rules; radio communications.		
(a)	5,000	7,500
(b)	2,500	5,000
220.23 Publication of radio information	2,500	5,000
220.25 Instruction of employees	5,000	7,500
220.27 Identification	1,000	2,000
220.29 Statement of letters and numbers	1,000	2,000
220.31 Initiating a transmission	1,000	2,000
220.33 Receiving a transmission	1,000	2,000
220.35 Ending a transmission	1,000	2,000
220.37 Voice test	5,000	7,500
220.39 Continuous monitoring	2,500	5,000
220.41 [Reserved]		
220.43 Communication consistent with the rules	2,500	5,000
220.45 Complete communications	2,500	5,000
220.47 Emergencies	2,500	5,000
220.49 Switching, backing or pushing	5,000	7,500
220.51 Signal indications	5,000	7,500
220.61 Radio transmission of mandatory directives	5,000	7,500

[63 FR 47195, Sept. 4, 1998, as amended at 69 FR 30593, May 28, 2004]

PART 221—REAR END MARKING DEVICE—PASSENGER, COMMUTER AND FREIGHT TRAINS

Subpart A—General

Sec.
221.1 Scope.
221.3 Application.
221.5 Definitions.
221.7 Civil penalty
221.9 Waivers.
221.11 State regulation.

Subpart B—Marking Devices

221.13 Marking device display.
221.14 Marking devices.
221.15 Marking device inspection.
221.16 Inspection procedure.
221.17 Movement of defective equipment.

APPENDIX A TO PART 221—PROCEDURES FOR APPROVAL OF REAR END MARKING DEVICES

APPENDIX B TO PART 221—APPROVED REAR END MARKING DEVICES

APPENDIX C TO PART 221—SCHEDULE OF CIVIL PENALTIES

AUTHORITY: 49 U.S.C. 20103, 20107; 28 U.S.C. 2461, note; and 49 CFR 1.49.

SOURCE: 42 FR 2321, Jan. 11, 1977, unless otherwise noted.

Subpart A—General

§221.1 Scope.

This part prescribes minimum requirements governing highly visible marking devices for the trailing end of the rear car of all passenger, commuter and freight trains. So long as these minimum requirements are met, railroads may adopt additional or more stringent requirements for rear end marking devices.

§221.3 Application.

(a) Except as provided in paragraph (b) of this section, this part applies to passenger, commuter and freight trains when operated on a standard gage main track which is part of the general railroad system of transportation.

(b) This part does not apply to:

(1) A railroad that operates only trains consisting of historical or antiquated equipment for excursion, educational, or recreational purposes;

(2) A train that operates only on track inside an installation which is not part of the general railroad system of transportation;

(3) Rapid transit operations in an urban area that are not connected with

[1] A penalty may be assessed against and only for a willful violation. The Administrator reserves the right to assess a penalty of up to $27,000 for any violation where circumstances warrant. See 49 CFR part 209, appendix A.

the general railroad system of transportation.

(4) A railroad that operates only one train at any given time.

[42 FR 2321, Jan. 11, 1977, as amended at 53 FR 28600, July 28, 1988]

§ 221.5 Definitions.

As used in this part:

(a) *Train* means a locomotive unit or locomotive units coupled, with or without cars, involved in a railroad operation conducted on a main track. It does not include yard movements.

(b) *Commuter train* means a short haul passenger train operating on track which is part of the general railroad system of transportation, within an urban, suburban or metropolitan area. It includes a passenger train provided by an instrumentality of a State or political subdivision thereof.

(c) *Locomotive* means a self-propelled unit of equipment designed for moving other equipment in revenue service and includes a self-propelled unit designed to carry freight or passenger traffic, or both.

(d) *Main track* means a track, other than an auxiliary track, extending through yards or between stations, upon which trains are operated by timetable or train order or both, or the use of which is governed by a signal system.

(e) *Train order* means mandatory directives issued as authority for the conduct of a railroad operation outside of yard limits.

(f) *Red-orange-amber color range* means those colors defined by chromaticity coordinates, as expressed in terms of the International Commission on Illumination's 1931 Colormetric System, which lie within the region bounded by the spectrum locus and lines defined by the following equations:

X+Y=.97 (white boundary)
Y=X—.12 (green boundary)

(g) *Administrator* means the Federal Railroad Administrator, the Deputy Administrator, or any official of the Federal Railroad Administration to whom the Administrator has delegated his authority under this part.

(h) *Effective intensity* means that intensity of a light in candela as defined by the Illuminating Engineering Society's Guide for Calculating the Effective Intensity of Flashing Signal Lights, November, 1964.

(i) *Qualified person* means any person who has the skill to perform the task and has received adequate instruction.

[42 FR 2321, Jan. 11, 1977; 42 FR 3843, Jan. 21, 1977, as amended at 51 FR 25185, July 10, 1986]

§ 221.7 Civil penalty.

Any person (an entity of any type covered under 1 U.S.C. 1, including but not limited to the following: a railroad; a manager, supervisor, official, or other employee or agent of a railroad; any owner, manufacturer, lessor, or lessee of railroad equipment, track, or facilities; any independent contractor providing goods or services to a railroad; and any employee of such owner, manufacturer, lessor, lessee, or independent contractor) who violates any requirement of this part or causes the violation of any such requirement is subject to a civil penalty of at least $550 and not more than $16,000 per violation, except that: Penalties may be assessed against individuals only for willful violations, and, where a grossly negligent violation or a pattern of repeated violations has created an imminent hazard of death or injury to persons, or has caused death or injury, a penalty not to exceed $27,000 per violation may be assessed. Each day a violation continues shall constitute a separate offense. See appendix C to this part for a statement of agency civil penalty policy.

[53 FR 28600, July 28, 1988, as amended at 53 FR 52930, Dec. 29, 1988; 63 FR 11621, Mar. 10, 1998; 69 FR 30593, May 28, 2004; 72 FR 51197, Sept. 6, 2007]

§ 221.9 Waivers.

(a) A railroad may petition the Federal Railroad Administrator for a waiver of compliance with any requirement prescribed in this part.

(b) Each petition for a waiver under this section must be filed in the manner and contain the information required by part 211 of this chapter.

(c) If the Administrator finds that a waiver of compliance is in the public interest and is consistent with railroad safety, he may grant the waiver subject to any condition he deems necessary. Notice of each waiver granted,

including a statement of the reasons therefor, will be published in the FEDERAL REGISTER.

§ 221.11 State regulation.

Notwithstanding the provisions of this part, a State may continue in force any law, rule, regulation, order, or standard that was in effect on July 8, 1976, relating to lighted marking devices on the rear car of freight trains except to the extent that such law, rule, regulation, order, or standard would cause such cars to be in violation of this part.

Subpart B—Marking Devices

§ 221.13 Marking device display.

(a) During the periods prescribed in paragraph (b) of this section, each train to which this part applies that occupies or operates on main track shall (1) be equipped with, (2) display on the trailing end of the rear car of that train, and (3) continuously illuminate or flash a marking device prescribed in this subpart.

(b) Unless equipped with a functioning photoelectric cell activation mechanism complying with paragraph (c) of this section, the marking devices prescribed by this subpart shall be illuminated continuously or flash during the period between one hour before sunset and one hour after sunrise, and during all other hours when weather conditions so restrict visibility that the end silhouette of a standard box car cannot be seen from ½ mile on tangent track by a person having 20/20 corrected vision.

(c) Marking devices prescribed by this part and equipped with a functioning photoelectric cell activation mechanism shall illuminate or flash the device continuously when there is less than 1.0 candela per square meter of ambient light.

(d) The centroid of the marking device must be located at a minimum of 48 inches above the top of the rail.

[51 FR 25185, July 10, 1986]

§ 221.14 Marking devices.

(a) As prescribed in § 221.13, passenger, commuter and freight trains shall be equipped with at least one marking device, which has been approved by the Federal Railroad Adminstrator in accordance with the procedures included in appendix A of this part, and which has the following characteristics:

(1) An intensity of not less than 100 candela nor more than 1000 candela (or an effective intensity of not less than 100 candela nor more than 1000 candela for flashing lights) as measured at the center of the beam width;

(2) A horizontal beam with a minimum arc width of fifteen (15) degrees each side of the vertical center line, and a vertical beam with a minimum arc width of five (5) degrees each side of the horizontal center line as defined in terms of the 50 candela intensity points;

(3) A color defined by the red-orange-amber color range; and

(4) If a flashing light is used, a flash rate of not less than once every 1.3 seconds nor more than once every .7 seconds.

(b) Marking devices used on passenger and commuter trains in compliance with paragraph (a) of this section shall be lighted under the conditions prescribed in § 221.13 (b) and (c).

(c) When a locomotive is operated singly, or at the rear of a train, highly visible marking devices may be provided by the use of:

(1) At least one marking device that complies with paragraph (a) of this section; or

(2) At least one illuminated red or amber classification light on the rear of the locomotive, provided it complies with paragraph (a) of this section; or

(3) The rear headlight of the locomotive illuminated on low beam.

[51 FR 25185, July 10, 1986]

§ 221.15 Marking device inspection.

(a) Each marking device displayed in compliance with this part shall be examined at each crew change point to assure that the device is in proper operating condition.

(b) This examination shall be accomplished either by visually observing that the device is functioning as required or that the device will function when required by either (1) repositioning the activation switch or (2) covering the photoelectric cell.

(c) This examination shall be conducted either by the train crew or some other qualified person, *Provided that*, if a non-train crewmember performs the examination, that person shall communicate his or her findings to the locomotive engineer of the new train crew.

(d) When equipped with a radio telemetry capability, a marker displayed in accordance with this part may be examined by observing the readout information displayed in the cab of the controlling locomotive demonstrating that the light is functioning as required in lieu of conducting a visual observation.

[51 FR 25185, July 10, 1986]

§ 221.16 Inspection procedure.

(a) Prior to operating the activation switch or covering the photoelectric cell when conducting this test, a non-train crew person shall determine that he is being protected against the unexpected movement of the train either under the procedures established in part 218 of this chapter or under the provisions of paragraph (b) of this section.

(b) In order to establish the alternative means of protection under this section, (1) the train to be inspected shall be standing on a main track; (2) the inspection task shall be limited to ascertaining that the marker is in proper operating condition; and (3) prior to performing the inspection procedure, the inspector shall personally contact the locomotive engineer or hostler and be advised by that person that they are occupying the cab of the controlling locomotive and that the train is and will remain secure against movement until the inspection has been completed.

[51 FR 25185, July 10, 1986]

§ 221.17 Movement of defective equipment.

(a) Whenever the marking device prescribed in this part becomes inoperative enroute, the train may be moved to the next forward location where the marking device can be repaired or replaced.

(b) Defective rolling equipment which, because of the nature of the defect, can be placed only at the rear of a train for movement to the next forward location at which repairs can be made need not be equipped with marking devices prescribed in this part.

(c) When a portion of a train has derailed, and a portable marking device is not available, the remainder of the train may be moved to the nearest terminal without being equipped with the marking device prescribed in this part.

APPENDIX A TO PART 221—PROCEDURES FOR APPROVAL OF REAR END MARKING DEVICES

As provided in § 221.15 of this part, marking devices must be approved by the Administrator, Approval shall be issued in accordance with the following procedures:

(a) Each submission for approval of a marking device consisting of lighted elements only shall contain the following information:

(1) A detailed description of the device including the type, luminance description, size of lens, manufacturer and catalog number, lamp manufacturer, lamp type and model number, and any auxiliary optics used.

(2) A certification, signed by the chief operating officer of the railroad, that—

(i) The device described in the submission has been tested in accordance with the current ''Guidelines for Testing of FRA Rear End Marking Devices,'' copies of which may be obtained from the Office of Safety, Federal Railroad Administration, 2100 Second Street SW., Washington, DC 20590;

(ii) The results of the tests performed under paragraph (i) of this subsection demonstrate marking device performance in compliance with the standard perscribed in 49 CFR 221.15;

(iii) Detailed test records, including as a minimum the name and address of the testing organizations, the name of the individual in charge of the tests, a narrative description of the test procedures, the number of samples tested, and for each sample tested, the on-axis beam candela, the beam candela at the ±15 degree points in the horizontal plane, the beam candela at the ±5 degree points in the vertical plane, and the chromaticity coordinates, are maintained by the railroad and are available for inspection by the FRA at a designated location which is identified in the submission;

(iv) Marking devices of this type installed in the operating environment shall consist of the same type and model of components as were used in the samples tested for purposes of this approval submission.

(3) Unless otherwise qualified, acknowledgement of the receipt of the submission required by this section shall constitute approval of the device. The FRA reserves the right to review the test records maintained

by the railroad, or to test independently any device submitted for approval under these procedures, and to withdraw the approval of such device at any time, after notice and opportunity for oral comment, if its performance in the operating environment fails to substantiate the rest results or to comply with 49 CFR 221.15.

(b)(1) Each submission for approval of a marking device consisting of non-lighted elements or a combination of lighted and non-lighted elements shall contain the following information:

(i) A detailed description of the device including the type of material, the reflectance factor, the size of the device, and the manufacturer and catalogue number;

(ii) A detailed description of the external light source including the intensity throughout its angle of coverage, and the manufacturer and catalogue number;

(iii) A detailed description of the proposed test procedure to be used to demonstrate marking device compliance with the standard prescribed in 49 CFR 221.15, including any detailed mathematical data reflecting expected performance.

(2) FRA will review the data submitted under subsection (1) of this section, and in those instances in which compliance with 49 CFR 221.15 appears possible from a theoretical analysis, the FRA will authorize and may take part in testing to demonstrate such compliance.

(3) Where authorized testing has demonstrated compliance with 49 CFR 221.15, a railroad shall submit a certification, signed by the chief operating officer of the railroad, that—

(i) The device described in the original submission has been tested in accordance with the procedures described therein;

(ii) The results of the tests peformed under paragraph (i) of this subsection demonstrate marking device performance in compliance with the standard prescribed in 49 CFR 221.15;

(iii) Detailed test records, including as a minimum the name and address of the testing organization, the name of the individual in charge of the tests, a narrative description of the test procedure, a description of the external light source used, the number of samples tested, and for each sample tested, the on-axis beam candela, the beam candela at the ±15 degree points in the horizontal plane, the beam candela at the ±15 degree point in the vertical plane, and the chromaticity coordinates, are maintained by the railroad and are available for inspection by the FRA at a designated location which is identified in the submission;

(iv) Marking devices of this type installed in the operating environment and the external light source used to illuminate them shall consist of the same type and model of components as were used in the samples tested for purposes of this approval submission.

(4) Unless otherwise qualified, acknowledgement of the receipt of the submission required by this subsection shall constitute approval of the device. The FRA reserves the right to review the test records maintained by the railroad, or to test independently any device submitted for approval under these procedures, and to disapprove the use of such device at any time if its performance fails to comply with 49 CFR 221.15.

(c) Whenever a railroad elects to use a marking device which has been previously approved by the FRA, and is included in the current list in appendix B to this part, the submission shall contain the following information:

(1) The marking device model designation as it appears in appendix B.

(2) A certification, signed by the chief operating officer of the railroad that—

(i) Marking devices of this type installed in the operating environment shall consist of the same type and model of components as were used in the samples tested for the original approval.

(d) Each submission for approval of a marking device shall be filed in triplicate with the Office of Standards and Procedures, Office of Safety, Federal Railroad Administration, 2100 Second Street SW., Washington, DC 20590.

[42 FR 62004, Dec. 8, 1977]

APPENDIX B TO PART 221—APPROVED REAR END MARKING DEVICES

PART I—APPROVED DEVICES TESTED FOR OR BY MANUFACTURERS

1. Manufacturer: Star Headlight & Lantern Co., 168 West Main Street, Honeoye Falls, NY 14472.

FRA identification Nos. FRA-PLE-STAR-845-F (flasher) and FRA-PLE-STAR-845-C (steady burn).

2. Manufacturer: Julian A. McDermott Corp., 1639 Stephen Street, Ridgewood, Long Island, NY 11227.

FRA identification Nos. FRA-MEC-MCD-100-C (steady burn), FRA-MEC-MCD-100-F (flasher), FRA-MEC-MCD-300-C (steady burn), and FRA-MEC-MCD-300-F (flasher).

3. Manufacturer: American Electronics, Inc.,[1] 40 Essex Street, Hackensack, NJ 07601.

FRA identification Nos. FRA-DRGW-YANK-300 (portable strobe), FRA-WP-YANK-301R (flashing), FRA-WP-YANK-305R (flashing), and FRA-WP-YANK-306R (steady burn).

[1] NOTE: Yankee Metal Products Corp. previously produced these devices.

PART II—APPROVED DEVICES TESTED FOR OR BY RAIL CARRIERS

1. Carrier: Atchison, Topeka & Santa Fe Railway Co., Technical Research & Development Department, 1001 Northeast Atchison Street, Topeka, Kans. 66616.

Manufacturer: Trans-Lite, Inc., P.O. Box 70, Milford, Conn. 06460.

FRA identification Nos. FRA-ATSF-TL-875-150, FRA-ATSF-TL-875-60, FRA-ATSF-TL-875-4412, and FRA-ATSF-TL-200.

2. Carrier: Amtrak—National Railroad Passenger Corporation, 400 North Capitol Street NW., Washington, DC 20001.

Manufacturer: (a) Trans-Lite, Inc., P.O. Box 70, Milford, Conn. 06460.

FRA identification Nos. FRA-ATK-TL-3895-1, FRA-ATK-TL-4491-2, FRA-ATK-TL-4491-3, and FRA-ATK-TL-FM-4491-1.

Manufacturer: (b) Luminator Division of Gulfton Industries, Inc., 1200 East Dallas North Parkway, Plano, Tex. 75074.

FRA identification No. FRA-ATK-LUM-0101890-001.

Manufacturer: (c) Whelen Engineering Co., Inc., Deep River, Conn. 06417.

FRA identification No. FRA-ATK-WHE-WERT-12.

[43 FR 36447, Aug. 17, 1978]

APPENDIX C TO PART 221—SCHEDULE OF CIVIL PENALTIES [1]

Section	Violation	Willful violation
221.13 Marking device display:		
(a) device not present, not displayed, or not properly illuminated	$5,000	$7,500
(d) device too close to rail	1,000	2,000
221.14 Marking devices: Use of unapproved or noncomplying device	2,500	5,000
221.15 Marking device inspection:		
(a) Failure to inspect at crew change	2,500	5,000
(b), (c) improper inspection	2,500	5,000
221.16 Inspection procedure:		
(a) Failure to obtain protection	5,000	7,500
(b) Improper protection	2,500	5,000
221.17 Movement of defective equipment	(1)	(1)

[1] A penalty may be assessed against an individual only for a willful violation. The Administrator reserves the right to assess a penalty of up to $27,000 for any violation where circumstances warrant. See 49 CFR part 209, appendix A. Where the conditions for movement of defective equipment set forth in § 221.17 of this part are not met, the movement constitutes a violation of § 221.13 of this part.

[53 FR 52930, Dec. 29, 1988, as amended at 69 FR 62818, Oct. 28, 2004]

PART 222—USE OF LOCOMOTIVE HORNS AT PUBLIC HIGHWAY-RAIL GRADE CROSSINGS

Subpart A—General

Sec.
222.1 What is the purpose of this regulation?
222.3 What areas does this regulation cover?
222.5 What railroads does this regulation apply to?
222.7 What is this regulation's effect on State and local laws and ordinances?
222.9 Definitions.
222.11 What are the penalties for failure to comply with this regulation?
222.13 Who is responsible for compliance?
222.15 How does one obtain a waiver of a provision of this regulation?
222.17 How can a State agency become a recognized State agency?

Subpart B—Use of Locomotive Horns

222.21 When must a locomotive horn be used?
222.23 How does this regulation affect sounding of a horn during an emergency or other situations?
222.25 How does this rule affect private highway-rail grade crossings?
222.27 How does this rule affect pedestrian grade crossings?

Subpart C—Exceptions to the Use of the Locomotive Horn

222.31 [Reserved]

SILENCED HORNS AT INDIVIDUAL CROSSINGS

222.33 Can locomotive horns be silenced at an individual public highway-rail grade crossing which is not within a quiet zone?

SILENCED HORNS AT GROUPS OF CROSSINGS—QUIET ZONES

222.35 What are minimum requirements for quiet zones?
222.37 Who may establish a quiet zone?
222.38 Can a quiet zone be created in the Chicago Region?
222.39 How is a quiet zone established?
222.41 How does this rule affect Pre-Rule Quiet Zones and Pre-Rule Partial Quiet Zones?
222.42 How does this rule affect Intermediate Quiet Zones and Intermediate Partial Quiet Zones?
222.43 What notices and other information are required to create or continue a quiet zone?

222.45 When is a railroad required to cease routine sounding of locomotive horns at crossings?
222.47 What periodic updates are required?
222.49 Who may file Grade Crossing Inventory Forms?
222.51 Under what conditions will quiet zone status be terminated?
222.53 What are the requirements for supplementary and alternative safety measures?
222.55 How are new supplementary or alternative safety measures approved?
222.57 Can parties seek review of the Associate Administrator's actions?
222.59 When may a wayside horn be used?
APPENDIX A TO PART 222—APPROVED SUPPLEMENTARY SAFETY MEASURES
APPENDIX B TO PART 222—ALTERNATIVE SAFETY MEASURES
APPENDIX C TO PART 222—GUIDE TO ESTABLISHING QUIET ZONES
APPENDIX D TO PART 222—DETERMINING RISK LEVELS
APPENDIX E TO PART 222—REQUIREMENTS FOR WAYSIDE HORNS
APPENDIX F TO PART 222—DIAGNOSTIC TEAM CONSIDERATIONS
APPENDIX G TO PART 222—SCHEDULE OF CIVIL PENALTIES

AUTHORITY: 28 U.S.C. 2461, note; 49 U.S.C. 20103, 20107, 20153, 21301, 21304; 49 CFR 1.49.

SOURCE: 71 FR 47634, Aug. 17, 2006, unless otherwise noted.

Subpart A—General

§ 222.1 What is the purpose of this regulation?

The purpose of this part is to provide for safety at public highway-rail grade crossings by requiring locomotive horn use at public highway-rail grade crossings except in quiet zones established and maintained in accordance with this part.

§ 222.3 What areas does this regulation cover?

(a) This part prescribes standards for sounding locomotive horns when locomotives approach and pass through public highway-rail grade crossings. This part also provides standards for the creation and maintenance of quiet zones within which locomotive horns need not be sounded.

(b) The provisions of this part are separate and severable from one another. If any provision is stayed or determined to be invalid, it is the intent of FRA that the remaining provisions shall continue in effect.

(c) This part does not apply to any Chicago Region highway-rail grade crossing where the railroad was excused from sounding the locomotive horn by the Illinois Commerce Commission, and where the railroad did not sound the horn, as of December 18, 2003.

§ 222.5 What railroads does this regulation apply to?

This part applies to all railroads except:

(a) A railroad that exclusively operates freight trains only on track which is not part of the general railroad system of transportation;

(b) Passenger railroads that operate only on track which is not part of the general railroad system of transportation and that operate at a maximum speed of 15 miles per hour over public highway-rail grade crossings; and

(c) Rapid transit operations within an urban area that are not connected to the general railroad system of transportation. See 49 CFR part 209, appendix A for the definitive statement of the meaning of the preceding sentence.

§ 222.7 What is this regulation's effect on State and local laws and ordinances?

(a) Except as provided in paragraph (b) of this section, issuance of this part preempts any State law, rule, regulation, or order governing the sounding of the locomotive horn at public highway-rail grade crossings, in accordance with 49 U.S.C. 20106.

(b) This part does not preempt any State law, rule, regulation, or order governing the sounding of locomotive audible warning devices at any highway-rail grade crossing described in § 222.3(c) of this part.

(c) Except as provided in §§ 222.25 and 222.27, this part does not preempt any State law, rule, regulation, or order governing the sounding of locomotive horns at private highway-rail grade crossings or pedestrian crossings.

(d) Inclusion of SSMs and ASMs in this part or approved subsequent to issuance of this part does not constitute federal preemption of State law regarding whether those measures may be used for traffic control. Individual

states may continue to determine whether specific SSMs or ASMs are appropriate traffic control measures for that State, consistent with Federal Highway Administration regulations and the MUTCD. However, except for the SSMs and ASMs implemented at highway-rail grade crossings described in § 222.3(c) of this part, inclusion of SSMs and ASMs in this part does constitute federal preemption of State law concerning the sounding of the locomotive horn in relation to the use of those measures.

(e) Issuance of this part does not constitute federal preemption of administrative procedures required under State law regarding the modification or installation of engineering improvements at highway-rail grade crossings.

§ 222.9 Definitions.

As used in this part—

Administrator means the Administrator of the Federal Railroad Administration or the Administrator's delegate.

Alternative safety measures (ASM) means a safety system or procedure, other than an SSM, established in accordance with this part which is provided by the appropriate traffic control authority or law enforcement authority and which, after individual review and analysis by the Associate Administrator, is determined to be an effective substitute for the locomotive horn in the prevention of highway-rail casualties at specific highway-rail grade crossings. Appendix B to this part lists such measures.

Associate Administrator means the Associate Administrator for Safety of the Federal Railroad Administration or the Associate Administrator's delegate.

Channelization device means a traffic separation system made up of a raised longitudinal channelizer, with vertical panels or tubular delineators, that is placed between opposing highway lanes designed to alert or guide traffic around an obstacle or to direct traffic in a particular direction. ''Tubular markers'' and ''vertical panels'', as described in the MUTCD, are acceptable channelization devices for purposes of this part. Additional design specifications are determined by the standard traffic design specifications used by the governmental entity constructing the channelization device.

Chicago Region means the following six counties in the State of Illinois: Cook, DuPage, Lake, Kane, McHenry and Will.

Crossing Corridor Risk Index means a number reflecting a measure of risk to the motoring public at public grade crossings along a rail corridor, calculated in accordance with the procedures in appendix D of this part, representing the average risk at each public crossing within the corridor. This risk level is determined by averaging among all public crossings within the corridor, the product of the number of predicted collisions per year and the predicted likelihood and severity of casualties resulting from those collisions at each public crossing within the corridor.

Diagnostic team as used in this part, means a group of knowledgeable representatives of parties of interest in a highway-rail grade crossing, organized by the public authority responsible for that crossing, who, using crossing safety management principles, evaluate conditions at a grade crossing to make determinations or recommendations for the public authority concerning safety needs at that crossing.

Effectiveness rate means a number between zero and one which represents the reduction of the likelihood of a collision at a public highway-rail grade crossing as a result of the installation of an SSM or ASM when compared to the same crossing equipped with conventional active warning systems of flashing lights and gates. Zero effectiveness means that the SSM or ASM provides no reduction in the probability of a collision, while an effectiveness rating of one means that the SSM or ASM is totally effective in eliminating collision risk. Measurements between zero and one reflect the percentage by which the SSM or ASM reduces the probability of a collision.

FRA means the Federal Railroad Administration.

Grade Crossing Inventory Form means the U.S. DOT National Highway-Rail Grade Crossing Inventory Form, FRA Form F6180.71. This form is available through the FRA's Office of Safety, or

on FRA's Web site at *http://www.fra.dot.gov*.

Intermediate Partial Quiet Zone means a segment of a rail line within which is situated one or a number of consecutive public highway-rail grade crossings at which State statutes or local ordinances restricted the routine sounding of locomotive horns for a specified period of time during the evening or nighttime hours, or at which locomotive horns did not sound due to formal or informal agreements between the community and the railroad or railroads for a specified period of time during the evening and/or nighttime hours, and at which such statutes, ordinances or agreements were in place and enforced or observed as of December 18, 2003, but not as of October 9, 1996.

Intermediate Quiet Zone means a segment of a rail line within which is situated one or a number of consecutive public highway-rail grade crossings at which State statutes or local ordinances restricted the routine sounding of locomotive horns, or at which locomotive horns did not sound due to formal or informal agreements between the community and the railroad or railroads, and at which such statutes, ordinances or agreements were in place and enforced or observed as of December 18, 2003, but not as of October 9, 1996.

Locomotive means a piece of on-track equipment other than hi-rail, specialized maintenance, or other similar equipment—

(1) With one or more propelling motors designed for moving other equipment;

(2) With one or more propelling motors designed to carry freight or passenger traffic or both; or

(3) Without propelling motors but with one or more control stands.

Locomotive audible warning device means a horn, whistle, siren, or bell affixed to a locomotive that is capable of producing an audible signal.

Locomotive horn means a locomotive air horn, steam whistle, or similar audible warning device (see 49 CFR 229.129) mounted on a locomotive or control cab car. The terms ''locomotive horn'', ''train whistle'', ''locomotive whistle'', and ''train horn'' are used interchangeably in the railroad industry. For purposes of this part, locomotive horns used in rapid transit operations must be suitable for street usage and/or designed in accordance with State law requirements.

Median means the portion of a divided highway separating the travel ways for traffic in opposite directions.

MUTCD means the Manual on Uniform Traffic Control Devices published by the Federal Highway Administration.

Nationwide Significant Risk Threshold means a number reflecting a measure of risk, calculated on a nationwide basis, which reflects the average level of risk to the motoring public at public highway-rail grade crossings equipped with flashing lights and gates and at which locomotive horns are sounded. For purposes of this rule, a risk level above the Nationwide Significant Risk Threshold represents a significant risk with respect to loss of life or serious personal injury. The Nationwide Significant Risk Threshold is calculated in accordance with the procedures in appendix D of this part. Unless otherwise indicated, references in this part to the Nationwide Significant Risk Threshold reflect its level as last published by FRA in the FEDERAL REGISTER.

New Partial Quiet Zone means a segment of a rail line within which is situated one or a number of consecutive public highway-rail crossings at which locomotive horns are not routinely sounded between the hours of 10 p.m. and 7 a.m., but are routinely sounded during the remaining portion of the day, and which does not qualify as a Pre-Rule Partial Quiet Zone or an Intermediate Partial Quiet Zone.

New Quiet Zone means a segment of a rail line within which is situated one or a number of consecutive public highway-rail grade crossings at which routine sounding of locomotive horns is restricted pursuant to this part and which does not qualify as either a Pre-Rule Quiet Zone or Intermediate Quiet Zone.

Non-traversable curb means a highway curb designed to discourage a motor vehicle from leaving the roadway. Non-traversable curbs are used at locations where highway speeds do not exceed 40

miles per hour and are at least six inches high. Additional design specifications are determined by the standard traffic design specifications used by the governmental entity constructing the curb.

Partial Quiet Zone means a segment of a rail line within which is situated one or a number of consecutive public highway-rail grade crossings at which locomotive horns are not routinely sounded for a specified period of time during the evening and/or nighttime hours.

Pedestrian grade crossing means, for purposes of this part, a separate designed sidewalk or pathway where pedestrians, but not vehicles, cross railroad tracks. Sidewalk crossings contiguous with, or separate but adjacent to, public highway-rail grade crossings are presumed to be part of the public highway-rail grade crossing and are not considered pedestrian grade crossings.

Power-out indicator means a device which is capable of indicating to trains approaching a grade crossing equipped with an active warning system whether commercial electric power is activating the warning system at that crossing. This term includes remote health monitoring of grade crossing warning systems if such monitoring system is equipped to indicate power status.

Pre-existing Modified Supplementary Safety Measure (Pre-existing Modified SSM) means a safety system or procedure that is listed in appendix A to this Part, but is not fully compliant with the standards set forth therein, which was installed before December 18, 2003 by the appropriate traffic control or law enforcement authority responsible for safety at the highway-rail grade crossing. The calculation of risk reduction credit for pre-existing modified SSMs is addressed in appendix B of this part.

Pre-existing Supplementary Safety Measure (Pre-existing SSM) means a safety system or procedure established in accordance with this part before December 18, 2003 which was provided by the appropriate traffic control or law enforcement authority responsible for safety at the highway-rail grade crossing. These safety measures must fully comply with the SSM requirements set forth in appendix A of this part. The calculation of risk reduction credit for qualifying pre-existing SSMs is addressed in appendix A.

Pre-Rule Partial Quiet Zone means a segment of a rail line within which is situated one or a number of consecutive public highway-rail crossings at which State statutes or local ordinances restricted the routine sounding of locomotive horns for a specified period of time during the evening and/or nighttime hours, or at which locomotive horns did not sound due to formal or informal agreements between the community and the railroad or railroads for a specified period of time during the evening and/or nighttime hours, and at which such statutes, ordinances or agreements were in place and enforced or observed as of October 9, 1996 and on December 18, 2003.

Pre-Rule Quiet Zone means a segment of a rail line within which is situated one or a number of consecutive public highway-rail crossings at which State statutes or local ordinances restricted the routine sounding of locomotive horns, or at which locomotive horns did not sound due to formal or informal agreements between the community and the railroad or railroads, and at which such statutes, ordinances or agreements were in place and enforced or observed as of October 9, 1996 and on December 18, 2003.

Private highway-rail grade crossing means, for purposes of this part, a highway-rail grade crossing which is not a public highway-rail grade crossing.

Public authority means the public entity responsible for traffic control or law enforcement at the public highway-rail grade or pedestrian crossing.

Public highway-rail grade crossing means, for purposes of this part, a location where a public highway, road, or street, including associated sidewalks or pathways, crosses one or more railroad tracks at grade. If a public authority maintains the roadway on both sides of the crossing, the crossing is considered a public crossing for purposes of this part.

Quiet zone means a segment of a rail line, within which is situated one or a number of consecutive public highway-

rail crossings at which locomotive horns are not routinely sounded.

Quiet Zone Risk Index means a measure of risk to the motoring public which reflects the Crossing Corridor Risk Index for a quiet zone, after adjustment to account for increased risk due to lack of locomotive horn use at the crossings within the quiet zone (if horns are presently sounded at the crossings) and reduced risk due to implementation, if any, of SSMs and ASMs with the quiet zone. The calculation of the Quiet Zone Risk Index, which is explained in appendix D of this part, does not differ for partial quiet zones.

Railroad means any form of non-highway ground transportation that runs on rails or electromagnetic guideways and any entity providing such transportation, including:

(1) Commuter or other short-haul railroad passenger service in a metropolitan or suburban area and commuter railroad service that was operated by the Consolidated Rail Corporation on January 1, 1979; and

(2) High speed ground transportation systems that connect metropolitan areas, without regard to whether those systems use new technologies not associated with traditional railroads; but does not include rapid transit operations in an urban area that are not connected to the general railroad system of transportation.

Recognized State agency means, for purposes of this part, a State agency, responsible for highway-rail grade crossing safety or highway and road safety, that has applied for and been approved by FRA as a participant in the quiet zone development process.

Relevant collision means a collision at a highway-rail grade crossing between a train and a motor vehicle, excluding the following: a collision resulting from an activation failure of an active grade crossing warning system; a collision in which there is no driver in the motor vehicle; or a collision in which the highway vehicle struck the side of the train beyond the fourth locomotive unit or rail car. With respect to Pre-Rule Partial Quiet Zones, a relevant collision shall not include collisions that occur during the time period within which the locomotive horn is routinely sounded.

Risk Index With Horns means a measure of risk to the motoring public when locomotive horns are routinely sounded at every public highway-rail grade crossing within a quiet zone. In Pre-Rule Quiet Zones and Pre-Rule Partial Quiet Zones, the Risk Index With Horns is determined by adjusting the Crossing Corridor Risk Index to account for the decreased risk that would result if locomotive horns were routinely sounded at each public highway-rail grade crossing.

Supplementary safety measure (SSM) means a safety system or procedure established in accordance with this part which is provided by the appropriate traffic control authority or law enforcement authority responsible for safety at the highway-rail grade crossing, that is determined by the Associate Administrator to be an effective substitute for the locomotive horn in the prevention of highway-rail casualties. Appendix A of this part lists such SSMs.

Waiver means a temporary or permanent modification of some or all of the requirements of this part as they apply to a specific party under a specific set of facts. Waiver does not refer to the process of establishing quiet zones or approval of quiet zones in accordance with the provisions of this part.

Wayside horn means a stationary horn located at a highway rail grade crossing, designed to provide, upon the approach of a locomotive or train, audible warning to oncoming motorists of the approach of a train.

§ 222.11 What are the penalties for failure to comply with this regulation?

Any person who violates any requirement of this part or causes the violation of any such requirement is subject to a civil penalty of least $550 and not more than $16,000 per violation, except that: Penalties may be assessed against individuals only for willful violations, and, where a grossly negligent violation or a pattern of repeated violations has created an imminent hazard of death or injury to persons, or has caused death or injury, a penalty not to exceed $27,000 per violation may be

assessed. Each day a violation continues shall constitute a separate offense. Any person who knowingly and willfully falsifies a record or report required by this part may be subject to criminal penalties under 49 U.S.C. 21311. Appendix G of this part contains a schedule of civil penalty amounts used in connection with this part.

[71 FR 47634, Aug. 17, 2006, as amended at 72 FR 51197, Sept. 6, 2007]

§ 222.13 Who is responsible for compliance?

Any person, including but not limited to a railroad, contractor for a railroad, or a local or State governmental entity that performs any function covered by this part, must perform that function in accordance with this part.

§ 222.15 How does one obtain a waiver of a provision of this regulation?

(a) Except as provided in paragraph (b) of this section, two parties must jointly file a petition (request) for a waiver. They are the railroad owning or controlling operations over the railroad tracks crossing the public highway-rail grade crossing and the public authority which has jurisdiction over the roadway crossing the railroad tracks.

(b) If the railroad and the public authority cannot reach agreement to file a joint petition, either party may file a request for a waiver; however, the filing party must specify in its petition the steps it has taken in an attempt to reach agreement with the other party, and explain why applying the requirement that a joint submission be made in that instance would not be likely to contribute significantly to public safety. If the Associate Administrator determines that applying the requirement for a jointly filed submission to that particular petition would not be likely to significantly contribute to public safety, the Associate Administrator shall waive the requirement for joint submission and accept the petition for consideration. The filing party must also provide the other party with a copy of the petition filed with FRA.

(c) Each petition for waiver must be filed in accordance with 49 CFR part 211.

(d) If the Administrator finds that a waiver of compliance with a provision of this part is in the public interest and consistent with the safety of highway and railroad users, the Administrator may grant the waiver subject to any conditions the Administrator deems necessary.

§ 222.17 How can a State agency become a recognized State agency?

(a) Any State agency responsible for highway-rail grade crossing safety and/or highway and road safety may become a recognized State agency by submitting an application to the Associate Administrator that contains:

(1) A detailed description of the proposed scope of involvement in the quiet zone development process;

(2) The name, address, and telephone number of the person(s) who may be contacted to discuss the State agency application; and

(3) A statement from State agency counsel which affirms that the State agency is authorized to undertake the responsibilities proposed in its application.

(b) The Associate Administrator will approve the application if, in the Associate Administrator's judgment, the proposed scope of State agency involvement will facilitate safe and effective quiet zone development. The Associate Administrator may include in any decision of approval such conditions as he/she deems necessary and appropriate.

Subpart B—Use of Locomotive Horns

§ 222.21 When must a locomotive horn be used?

(a) Except as provided in this part, the locomotive horn on the lead locomotive of a train, lite locomotive consist, individual locomotive or lead cab car shall be sounded when such locomotive or lead cab car is approaching a public highway-rail grade crossing. Sounding of the locomotive horn with two long blasts, one short blast and one long blast shall be initiated at a location so as to be in accordance with paragraph (b) of this section and shall

be repeated or prolonged until the locomotive occupies the crossing. This pattern may be varied as necessary where crossings are spaced closely together.

(b)(1) Railroads to which this part applies shall comply with all the requirements contained in this paragraph (b) beginning on December 15, 2006. On and after June 24, 2005, but prior to December 15, 2006, a railroad shall, at its option, comply with this section or shall sound the locomotive horn in the manner required by State law, or in the absence of State law, in the manner required by railroad operating rules in effect immediately prior to June 24, 2005.

(2) Except as provided in paragraphs (b)(3) and (d) of this section, or when the locomotive horn is defective and the locomotive is being moved for repair consistent with section 229.9 of this chapter, the locomotive horn shall begin to be sounded at least 15 seconds, but no more than 20 seconds, before the locomotive enters the crossing. It shall not constitute a violation of this section if, acting in good faith, a locomotive engineer begins sounding the locomotive horn not more than 25 seconds before the locomotive enters the crossing, if the locomotive engineer is unable to precisely estimate the time of arrival of the train at the crossing for whatever reason.

(3) Trains, locomotive consists and individual locomotives traveling at speeds in excess of 60 mph shall not begin sounding the horn more than one-quarter mile (1,320 feet) in advance of the nearest public highway-rail grade crossing, even if the advance warning provided by the locomotive horn will be less than 15 seconds in duration.

(c) As stated in § 222.3(c) of this part, this section does not apply to any Chicago Region highway-rail grade crossing at which railroads were excused from sounding the locomotive horn by the Illinois Commerce Commission, and where railroads did not sound the horn, as of December 18, 2003.

(d) Trains, locomotive consists and individual locomotives that have stopped in close proximity to a public highway-rail grade crossing may approach the crossing and sound the locomotive horn for less than 15 seconds before the locomotive enters the highway-rail grade crossing, if the locomotive engineer is able to determine that the public highway-rail grade crossing is not obstructed and either:

(1) The public highway-rail grade crossing is equipped with automatic flashing lights and gates and the gates are fully lowered; or

(2) There are no conflicting highway movements approaching the public highway-rail grade crossing.

(e) Where State law requires the sounding of a locomotive audible warning device other than the locomotive horn at public highway-rail grade crossings, that locomotive audible warning device shall be sounded in accordance with paragraphs (b) and (d) of this section.

§ 222.23 How does this regulation affect sounding of a horn during an emergency or other situations?

(a)(1) Notwithstanding any other provision of this part, a locomotive engineer may sound the locomotive horn to provide a warning to animals, vehicle operators, pedestrians, trespassers or crews on other trains in an emergency situation if, in the locomotive engineer's sole judgment, such action is appropriate in order to prevent imminent injury, death, or property damage.

(2) Notwithstanding any other provision of this part, including provisions addressing the establishment of a quiet zone, limits on the length of time in which a horn may be sounded, or installation of wayside horns within quiet zones, this part does not preclude the sounding of locomotive horns in emergency situations, nor does it impose a legal duty to sound the locomotive horn in such situations.

(b) Nothing in this part restricts the use of the locomotive horn in the following situations:

(1) When a wayside horn is malfunctioning;

(2) When active grade crossing warning devices have malfunctioned and use of the horn is required by one of the following sections of this chapter: §§ 234.105, 234.106, or 234.107;

(3) When grade crossing warning systems are temporarily out of service during inspection, maintenance, or testing of the system; or

(4) When SSMs, modified SSMs or engineering SSMs no longer comply with the requirements set forth in appendix A of this part or the conditions contained within the Associate Administrator's decision to approve the quiet zone in accordance with section 222.39(b) of this part.

(c) Nothing in this part restricts the use of the locomotive horn for purposes other than highway-rail crossing safety (e.g., to announce the approach of a train to roadway workers in accordance with a program adopted under part 214 of this chapter, or where required for other purposes under railroad operating rules).

§ 222.25 How does this rule affect private highway-rail grade crossings?

This rule does not require the routine sounding of locomotive horns at private highway-rail grade crossings. However, where State law requires the sounding of a locomotive horn at private highway-rail grade crossings, the locomotive horn shall be sounded in accordance with § 222.21 of this part. Where State law requires the sounding of a locomotive audible warning device other than the locomotive horn at private highway-rail grade crossings, that locomotive audible warning device shall be sounded in accordance with §§ 222.21(b) and (d) of this part.

(a) Private highway-rail grade crossings located within the boundaries of a quiet zone must be included in the quiet zone.

(b)(1) Private highway-rail grade crossings that are located in New Quiet Zones or New Partial Quiet Zones and allow access to the public, or which provide access to active industrial or commercial sites, must be evaluated by a diagnostic team and equipped or treated in accordance with the recommendations of such diagnostic team.

(2) The public authority shall provide the State agency responsible for grade crossing safety and all affected railroads an opportunity to participate in the diagnostic team review of private highway-rail grade crossings.

(c)(1) At a minimum, each approach to every private highway-rail grade crossing within a New Quiet Zone or New Partial Quiet Zone shall be marked by a crossbuck and a ''STOP'' sign, which are compliant with MUTCD standards unless otherwise prescribed by State law, and shall be equipped with advance warning signs in compliance with § 222.35(c) of this part.

(2) At a minimum, each approach to every private highway-rail grade crossing within a Pre-Rule Quiet Zone or Pre-Rule Partial Quiet Zone shall, by June 24, 2008, be marked by a crossbuck and a ''STOP'' sign, which are compliant with MUTCD standards unless otherwise prescribed by State law, and shall be equipped with advance warning signs in compliance with § 222.35(c) of this part.

§ 222.27 How does this rule affect pedestrian grade crossings?

This rule does not require the routine sounding of locomotive horns at pedestrian grade crossings. However, where State law requires the sounding of a locomotive horn at pedestrian grade crossings, the locomotive horn shall be sounded in accordance with § 222.21 of this part. Where State law requires the sounding of a locomotive audible warning device other than the locomotive horn at pedestrian grade crossings, that locomotive audible warning device shall be sounded in accordance with §§ 222.21(b) and (d) of this part.

(a) Pedestrian grade crossings located within the boundaries of a quiet zone must be included in the quiet zone.

(b) Pedestrian grade crossings that are located in New Quiet Zones or New Partial Quiet Zones must be evaluated by a diagnostic team and equipped or treated in accordance with the recommendations of such diagnostic team.

(c) The public authority shall provide the State agency responsible for grade crossing safety and all affected railroads an opportunity to participate in diagnostic team reviews of pedestrian grade crossings.

(d) *Advance warning signs.* (1) Each approach to every pedestrian grade crossing within a New Quiet Zone shall be equipped with a sign that advises the pedestrian that train horns are not sounded at the crossing. Such sign shall conform to the standards contained in the MUTCD.

(2) Each approach to every pedestrian grade crossing within a New Partial

Quiet Zone shall be equipped with a sign that advises the pedestrian that train horns are not sounded at the crossing or that train horns are not sounded at the crossing between the hours of 10 p.m. and 7 a.m., whichever is applicable. Such sign shall conform to the standards contained in the MUTCD.

(3) Each approach to every pedestrian grade crossing within a Pre-Rule Quiet Zone shall be equipped by June 24, 2008 with a sign that advises the pedestrian that train horns are not sounded at the crossing. Such sign shall conform to the standards contained in the MUTCD.

(4) Each approach to every pedestrian grade crossing within a Pre-Rule Partial Quiet Zone shall be equipped by June 24, 2008 with a sign that advises the pedestrian that train horns are not sounded at the crossing or that train horns are not sounded at the crossing for a specified period of time, whichever is applicable. Such sign shall conform to the standards contained in the MUTCD.

Subpart C—Exceptions to the Use of the Locomotive Horn

§ 222.31 [Reserved]

SILENCED HORNS AT INDIVIDUAL CROSSINGS

§ 222.33 Can locomotive horns be silenced at an individual public highway-rail grade crossing which is not within a quiet zone?

(a) A railroad operating over an individual public highway-rail crossing may, at its discretion, cease the sounding of the locomotive horn if the locomotive speed is 15 miles per hour or less and train crew members, or appropriately equipped flaggers, as defined in 49 CFR 234.5, flag the crossing to provide warning of approaching trains to motorists.

(b) This section does not apply where active grade crossing warning devices have malfunctioned and use of the horn is required by 49 CFR 234.105, 234.106, or 234.107.

SILENCED HORNS AT GROUPS OF CROSSINGS—QUIET ZONES

§ 222.35 What are the minimum requirements for quiet zones?

The following requirements apply to quiet zones established in conformity with this part.

(a) *Minimum length.* (1)(i) Except as provided in paragraph (a)(1)(ii) of this section, the minimum length of a New Quiet Zone or New Partial Quiet Zone established under this part shall be one-half mile along the length of railroad right-of-way.

(ii) The one-half mile minimum length requirement shall be waived for any New Quiet Zone or New Partial Quiet Zone that is added onto an existing quiet zone, provided there is no public highway-rail grade crossing at which locomotive horns are routinely sounded within one-half mile of the New Quiet Zone or New Partial Quiet Zone.

(iii) New Quiet Zones and New Partial Quiet Zones established along the same rail line within a single political jurisdiction shall be separated by at least one public highway-rail grade crossing, unless a New Quiet Zone or New Partial Quiet Zone is being added onto an existing quiet zone.

(2)(i) The length of a Pre-Rule Quiet Zone or Pre-Rule Partial Quiet Zone may continue unchanged from that which existed as of October 9, 1996.

(ii) With the exception of combining adjacent Pre-Rule Quiet Zones or Pre-Rule Partial Quiet Zones, the addition of any public highway-rail grade crossing to a Pre-Rule Quiet Zone or Pre-Rule Partial Quiet Zone shall end the grandfathered status of that quiet zone and transform it into a New Quiet Zone or New Partial Quiet Zone that must comply with all requirements applicable to New Quiet Zones and New Partial Quiet Zones.

(iii) The deletion of any public highway-rail grade crossing from a Pre-Rule Quiet Zone or Pre-Rule Partial Quiet Zone, with the exception of a grade separation or crossing closure, must result in a quiet zone of at least one-half mile in length in order to retain Pre-Rule Quiet Zone or Pre-Rule Partial Quiet Zone status.

(3) A quiet zone may include grade crossings on a segment of rail line crossing more than one political jurisdiction.

(b) *Active grade crossing warning devices.* (1) Each public highway-rail grade crossing in a New Quiet Zone established under this part must be equipped, no later than the quiet zone implementation date, with active grade crossing warning devices comprising both flashing lights and gates which control traffic over the crossing and that conform to the standards contained in the MUTCD. Such warning devices shall be equipped with constant warning time devices, if reasonably practical, and power-out indicators.

(2) With the exception of public highway-rail grade crossings that will be temporarily closed in accordance with appendix A of this part, each public highway-rail grade crossing in a New Partial Quiet Zone established under this part must be equipped, no later than the quiet zone implementation date, with active grade crossing warning devices comprising both flashing lights and gates which control traffic over the crossing and that conform to the standards contained in the MUTCD. Such warning devices shall be equipped with constant warning time devices, if reasonably practical, and power-out indicators.

(3) Pre-Rule Quiet Zones and Pre-Rule Partial Quiet Zones must retain, and may upgrade, the grade crossing safety warning system which existed as of December 18, 2003. Any upgrade involving the installation or renewal of an automatic warning device system shall include constant warning time devices, where reasonably practical, and power-out indicators. In no event may the grade crossing safety warning system, which existed as of December 18, 2003, be downgraded. Risk reduction resulting from upgrading to flashing lights or gates may be credited in calculating the Quiet Zone Risk Index.

(c) *Advance warning signs.* (1) Each highway approach to every public and private highway-rail grade crossing within a New Quiet Zone shall be equipped with an advance warning sign that advises the motorist that train horns are not sounded at the crossing. Such sign shall conform to the standards contained in the MUTCD.

(2) Each highway approach to every public and private highway-rail grade crossing within a New Partial Quiet Zone shall be equipped with an advance warning sign that advises the motorist that train horns are not sounded at the crossing or that train horns are not sounded at the crossing between the hours of 10 p.m. and 7 a.m., whichever is applicable. Such sign shall conform to the standards contained in the MUTCD.

(3) Each highway approach to every public and private highway-rail grade crossing within a Pre-Rule Quiet Zone shall be equipped by June 24, 2008 with an advance warning sign that advises the motorist that train horns are not sounded at the crossing. Such sign shall conform to the standards contained in the MUTCD.

(4) Each highway approach to every public and private highway-rail grade crossing within a Pre-Rule Partial Quiet Zone shall be equipped by June 24, 2008 with an advance warning sign that advises the motorist that train horns are not sounded at the crossing or that train horns are not sounded at the crossing for a specified period of time, whichever is applicable. Such sign shall conform to the standards contained in the MUTCD.

(5) This paragraph (c) does not apply to public and private highway-rail grade crossings equipped with wayside horns that conform to the requirements set forth in § 222.59 and Appendix E of this part.

(d) *Bells.* (1) Each public highway-rail grade crossing in a New Quiet Zone or New Partial Quiet Zone that is subjected to pedestrian traffic and equipped with one or more automatic bells shall retain those bells in working condition.

(2) Each public highway-rail grade crossing in a Pre-Rule Quiet Zone or Pre-Rule Partial Quiet Zone that is subjected to pedestrian traffic and equipped with one or more automatic bells shall retain those bells in working condition.

(e) All private highway-rail grade crossings within the quiet zone must be treated in accordance with this section and § 222.25 of this part.

(f) All pedestrian grade crossings within a quiet zone must be treated in accordance with § 222.27 of this part.

(g) All public highway-rail grade crossings within the quiet zone must be in compliance with the requirements of the MUTCD.

§ 222.37 Who may establish a quiet zone?

(a) A public authority may establish quiet zones that are consistent with the provisions of this part. If a proposed quiet zone includes public highway-rail grade crossings under the authority and control of more than one public authority (such as a county road and a State highway crossing the railroad tracks at different crossings), both public authorities must agree to establishment of the quiet zone, and must jointly, or by delegation provided to one of the authorities, take such actions as are required by this part.

(b) A public authority may establish quiet zones irrespective of State laws covering the subject matter of sounding or silencing locomotive horns at public highway-rail grade crossings. Nothing in this part, however, is meant to affect any other applicable role of State agencies or the Federal Highway Administration in decisions regarding funding or construction priorities for grade crossing safety projects, selection of traffic control devices, or engineering standards for roadways or traffic control devices.

(c) A State agency may provide administrative and technical services to public authorities by advising them, acting on their behalf, or acting as a central contact point in dealing with FRA; however, any public authority eligible to establish a quiet zone under this part may do so.

§ 222.38 Can a quiet zone be created in the Chicago Region?

Public authorities that are eligible to establish quiet zones under this part may create New Quiet Zones or New Partial Quiet Zones in the Chicago Region, provided the New Quiet Zone or New Partial Quiet Zone does not include any highway-rail grade crossing described in § 222.3(c) of this part.

§ 222.39 How is a quiet zone established?

(a) *Public authority designation.* This paragraph (a) describes how a quiet zone may be designated by a public authority without the need for formal application to, and approval by, FRA. If a public authority complies with either paragraph (a)(1), (a)(2), or (a)(3) of this section, and complies with the information and notification provisions of § 222.43 of this part, a public authority may designate a quiet zone without the necessity for FRA review and approval.

(1) A quiet zone may be established by implementing, at every public highway-rail grade crossing within the quiet zone, one or more SSMs identified in appendix A of this part.

(2) A quiet zone may be established if the Quiet Zone Risk Index is at, or below, the Nationwide Significant Risk Threshold, as follows:

(i) If the Quiet Zone Risk Index is already at, or below, the Nationwide Significant Risk Threshold without being reduced by implementation of SSMs; or

(ii) If SSMs are implemented which are sufficient to reduce the Quiet Zone Risk Index to a level at, or below, the Nationwide Significant Risk Threshold.

(3) A quiet zone may be established if SSMs are implemented which are sufficient to reduce the Quiet Zone Risk Index to a level at or below the Risk Index With Horns.

(b) *Public authority application to FRA.* (1) A public authority may apply to the Associate Administrator for approval of a quiet zone that does not meet the standards for public authority designation under paragraph (a) of this section, but in which it is proposed that one or more safety measures be implemented. Such proposed quiet zone may include only ASMs, or a combination of ASMs and SSMs at various crossings within the quiet zone. Note that an engineering improvement which does not fully comply with the requirements for an SSM under appendix A of this part, is considered to be an ASM. The public authority's application must:

(i) Contain an accurate, complete and current Grade Crossing Inventory

Form for each public, private and pedestrian grade crossing within the proposed quiet zone;

(ii) Contain sufficient detail concerning the present safety measures at each public, private and pedestrian grade crossing proposed to be included in the quiet zone to enable the Associate Administrator to evaluate their effectiveness;

(iii) Contain detailed information about diagnostic team reviews of any crossing within the proposed quiet zone, including a membership list and a list of recommendations made by the diagnostic team;

(iv) Contain a statement describing efforts taken by the public authority to address comments submitted by each railroad operating the public highway-rail grade crossings within the quiet zone, the State agency responsible for highway and road safety, and the State agency responsible for grade crossing safety in response to the Notice of Intent. This statement shall also list any objections to the proposed quiet zone that were raised by the railroad(s) and State agencies;

(v) Contain detailed information as to which safety improvements are proposed to be implemented at each public, private, or pedestrian grade crossing within the proposed quiet zone;

(vi) Contain a commitment to implement the proposed safety improvements within the proposed quiet zone; and

(vii) Demonstrate through data and analysis that the proposed implementation of these measures will reduce the Quiet Zone Risk Index to a level at, or below, either the Risk Index With Horns or the Nationwide Significant Risk Threshold.

(2) If the proposed quiet zone contains newly established public or private highway-rail grade crossings, the public authority's application for approval must also include five-year projected vehicle and rail traffic counts for each newly established grade crossing;

(3) *60-day comment period*. (i) The public authority application for FRA approval of the proposed quiet zone shall be provided, by certified mail, return receipt requested, to: all railroads operating over the public highway-rail grade crossings within the quiet zone; the highway or traffic control or law enforcement authority having jurisdiction over vehicular traffic at grade crossings within the quiet zone; the landowner having control over any private highway-rail grade crossings within the quiet zone; the State agency responsible for highway and road safety; the State agency responsible for grade crossing safety; and the Associate Administrator.

(ii) Except as provided in paragraph (b)(3)(iii) of this section, any party that receives a copy of the public authority application may submit comments on the public authority application to the Associate Administrator during the 60-day period after the date on which the public authority application was mailed.

(iii) If the public authority application for FRA approval contains written statements from each railroad operating over the public highway-rail grade crossings within the quiet zone, the highway or traffic control authority or law enforcement authority having jurisdiction over vehicular traffic at grade crossings within the quiet zone, the State agency responsible for grade crossing safety, and the State agency responsible for highway and road safety stating that the railroad, vehicular traffic authority and State agencies have waived their rights to provide comments on the public authority application, the 60-day comment period under paragraph (b)(3)(ii) of this section shall be waived.

(4)(i) After reviewing any comments submitted under paragraph (b)(3)(ii) of this section, the Associate Administrator will approve the quiet zone if, in the Associate Administrator's judgment, the public authority is in compliance with paragraphs (b)(1) and (b)(2) of this section and has satisfactorily demonstrated that the SSMs and ASMs proposed by the public authority result in a Quiet Zone Risk Index that is either:

(A) At or below the Risk Index With Horns or

(B) At or below the Nationwide Significant Risk Threshold.

(ii) The Associate Administrator may include in any decision of approval such conditions as may be necessary to

ensure that the proposed safety improvements are effective. If the Associate Administrator does not approve the quiet zone, the Associate Administrator will describe, in the decision, the basis upon which the decision was made. Decisions issued by the Associate Administrator on quiet zone applications shall be provided to all parties listed in paragraph (b)(3)(i) of this section and may be reviewed as provided in §§ 222.57(b) and (d) of this part.

(c) Appendix C of this part contains guidance on how to create a quiet zone.

§ 222.41 How does this rule affect Pre-Rule Quiet Zones and Pre-Rule Partial Quiet Zones?

(a) *Pre-Rule Quiet Zones that will be established by automatic approval.* (1) A Pre-Rule Quiet Zone may be established by automatic approval and remain in effect, subject to § 222.51, if the Pre-Rule Quiet Zone is in compliance with §§ 222.35 (minimum requirements for quiet zones) and 222.43 of this part (notice and information requirements) and:

(i) The Pre-Rule Quiet Zone has at every public highway-rail grade crossing within the quiet zone one or more SSMs identified in appendix A of this part; or

(ii) The Quiet Zone Risk Index is at, or below, the Nationwide Significant Risk Threshold, as last published by FRA in the FEDERAL REGISTER; or

(iii) The Quiet Zone Risk Index is above the Nationwide Significant Risk Threshold, as last published by FRA in the FEDERAL REGISTER, but less than twice the Nationwide Significant Risk Threshold and there have been no relevant collisions at any public highway-rail grade crossing within the quiet zone since April 27, 2000 or

(iv) The Quiet Zone Risk Index is at, or below, the Risk Index with Horns.

(2) The public authority shall provide Notice of Quiet Zone Establishment, in accordance with § 222.43 of this part, no later than December 24, 2005.

(b) *Pre-Rule Partial Quiet Zones that will be established by automatic approval.* (1) A Pre-Rule Partial Quiet Zone may be established by automatic approval and remain in effect, subject to § 222.51, if the Pre-Rule Partial Quiet Zone is in compliance with §§ 222.35 (minimum requirements for quiet zones) and 222.43 of this part (notice and information requirements) and:

(i) The Pre-Rule Partial Quiet Zone has at every public highway-rail grade crossing within the quiet zone one or more SSMs identified in appendix A of this part; or

(ii) The Quiet Zone Risk Index is at, or below, the Nationwide Significant Risk Threshold, as last published by FRA in the FEDERAL REGISTER; or

(iii) The Quiet Zone Risk Index is above the Nationwide Significant Risk Threshold, as last published by FRA in the FEDERAL REGISTER, but less than twice the Nationwide Significant Risk Threshold and there have been no relevant collisions at any public highway-rail grade crossing within the quiet zone since April 27, 2000. With respect to Pre-Rule Partial Quiet Zones, collisions that occurred during the time period within which the locomotive horn was routinely sounded shall not be considered ''relevant collisions''; or

(iv) The Quiet Zone Risk Index is at, or below, the Risk Index with Horns.

(2) The public authority shall provide Notice of Quiet Zone Establishment, in accordance with § 222.43 of this part, no later than December 24, 2005.

(c) *Pre-Rule Quiet Zones and Pre-Rule Partial Quiet Zones that will not be established by automatic approval.* (1) If a Pre-Rule Quiet Zone or Pre-Rule Partial Quiet Zone will not be established by automatic approval under paragraph (a) or (b) of this section, existing restrictions may, at the public authority's discretion, remain in place until June 24, 2008, if a Notice of Quiet Zone Continuation is provided in accordance with § 222.43 of this part.

(2)(i) Existing restrictions on the routine sounding of the locomotive horn may remain in place until June 24, 2010, if:

(A) Notice of Intent is mailed, in accordance with § 222.43 of this part, by February 24, 2008; and

(B) A detailed plan for quiet zone improvements is filed with the Associate Administrator by June 24, 2008. The detailed plan shall include a detailed explanation of, and timetable for, the safety improvements that will be implemented at each public, private and

pedestrian grade crossing located within the Pre-Rule Quiet Zone or Pre-Rule Partial Quiet Zone which are necessary to comply with §§ 222.25, 222.27, 222.35 and 222.39 of this part.

(ii) In the event that the safety improvements planned for the quiet zone require approval of FRA under § 222.39(b) of this part, the public authority should apply for such approval prior to December 24, 2007, to ensure that FRA has ample time in which to review such application prior to the end of the extension period.

(3) Locomotive horn restrictions may continue for an additional three years beyond June 24, 2010, if:

(i) Prior to June 24, 2008, the appropriate State agency provides to the Associate Administrator: A comprehensive State-wide implementation plan and funding commitment for implementing improvements at Pre-Rule Quiet Zones and Pre-Rule Partial Quiet Zones which, when implemented, would enable them to qualify as quiet zones under this part; and

(ii) Prior to June 24, 2009, either safety improvements are initiated at a portion of the crossings within the quiet zone, or the appropriate State agency has participated in quiet zone improvements in one or more Pre-Rule Quiet Zones or Pre-Rule Partial Quiet Zones elsewhere within the State.

(4) A public authority may establish a Pre-Rule Quiet Zone or Pre-Rule Partial Quiet Zone upon compliance with:

(A) The Pre-Rule Quiet Zone or Pre-Rule Partial Quiet Zone requirements contained within §§ 222.25, 222.27, and 222.35 of this part;

(B) The quiet zone standards set forth in § 222.39 of this part; and

(C) All applicable notification and filing requirements contained within this paragraph (c) and § 222.43 of this part.

(d) *Pre-Rule Partial Quiet Zones that will be converted to 24-hour New Quiet Zones*. A Pre-Rule Partial Quiet Zone may be converted into a 24-hour New Quiet Zone, if:

(1) The quiet zone is brought into compliance with the New Quiet Zone requirements set forth in §§ 222.25, 222.27, and 222.35 of this part;

(2) The quiet zone is brought into compliance with the quiet zone standards set forth in § 222.39 of this part; and

(3) The public authority complies with all applicable notification and filing requirements contained within this paragraph (c) and § 222.43 of this part.

§ 222.42 How does this rule affect Intermediate Quiet Zones and Intermediate Partial Quiet Zones?

(a)(1) Existing restrictions may, at the public authority's discretion, remain in place within the Intermediate Quiet Zone or Intermediate Partial Quiet Zone until June 24, 2006, if the public authority provides Notice of Quiet Zone Continuation, in accordance with § 222.43 of this part.

(2) A public authority may continue locomotive horn sounding restrictions beyond June 24, 2006 by establishing a New Quiet Zone or New Partial Quiet Zone. A public authority may establish a New Quiet Zone or New Partial Quiet Zone if:

(i) Notice of Intent is mailed, in accordance with § 222.43 of this part;

(ii) The quiet zone complies with the standards set forth in § 222.39 of this part;

(iii) The quiet zone complies with the New Quiet Zone standards set forth in §§ 222.25, 222.27, and 222.35 of this part;

(iv) Notice of Quiet Zone Establishment is mailed, in accordance with § 222.43 of this part, by June 3, 2006.

(b) *Conversion of Intermediate Partial Quiet Zones into 24-hour New Quiet Zones*. An Intermediate Partial Quiet Zone may be converted into a 24-hour New Quiet Zone if:

(1) Notice of Intent is mailed, in accordance with § 222.43 of this part;

(2) The quiet zone complies with the standards set forth in § 222.39 of this part;

(3) The quiet zone is brought into compliance with the New Quiet Zone requirements set forth in §§ 222.25, 222.27, and 222.35 of this part; and

(4) Notice of Quiet Zone Establishment is mailed, in accordance with § 222.43 of this part, by June 3, 2006.

§ 222.43 What notices and other information are required to create or continue a quiet zone?

(a)(1) The public authority shall provide written notice, by certified mail, return receipt requested, of its intent

to create a New Quiet Zone or New Partial Quiet Zone under § 222.39 of this part or to implement new SSMs or ASMs within a Pre-Rule Quiet Zone or Pre-Rule Partial Quiet Zone under § 222.41(c) or (d) of this part. Such notification shall be provided to: All railroads operating over the public highway-rail grade crossings within the quiet zone; the State agency responsible for highway and road safety; and the State agency responsible for grade crossing safety.

(2) The public authority shall provide written notification, by certified mail, return receipt requested, to continue a Pre-Rule Quiet Zone or Pre-Rule Partial Quiet Zone under § 222.41 of this part or to continue an Intermediate Quiet Zone or Intermediate Partial Quiet Zone under § 222.42 of this part. Such notification shall be provided to: All railroads operating over the public highway-rail grade crossings within the quiet zone; the highway or traffic control or law enforcement authority having jurisdiction over vehicular traffic at grade crossings within the quiet zone; the landowner having control over any private highway-rail grade crossings within the quiet zone; the State agency responsible for highway and road safety; the State agency responsible for grade crossing safety; and the Associate Administrator.

(3) The public authority shall provided written notice, by certified mail, return receipt requested, of the establishment of a quiet zone under § 222.39 or 222.41 of this part. Such notification shall be provided to: All railroads operating over the public highway-rail grade crossings within the quiet zone; the highway or traffic control or law enforcement authority having jurisdiction over vehicular traffic at grade crossings within the quiet zone; the landowner having control over any private highway-rail grade crossings within the quiet zone; the State agency responsible for highway and road safety; the State agency responsible for grade crossing safety; and the Associate Administrator.

(b) *Notice of Intent*—(1) *Timing*. (i) The Notice of Intent shall be mailed at least 60 days before the mailing of the Notice of Quiet Zone Establishment, unless the public authority obtains written comments and/or ''no-comment'' statements from each railroad operating over public highway-rail grade crossings within the quiet zone, the State agency responsible for grade crossing safety, and the State agency responsible for highway and road safety, in accordance with paragraph (b)(3)(ii) of this section.

(ii) The Notice of Intent shall be mailed no later than February 24, 2008 for all Pre-Rule Quiet Zones and Pre-Rule Partial Quiet Zones governed by §§ 222.41(c) and (d) of this part, in order to continue existing locomotive horn sounding restrictions beyond June 24, 2008 without interruption.

(2) *Required contents*. The Notice of Intent shall include the following:

(i) A list of each public, private, and pedestrian grade crossing within the quiet zone, identified by both U.S. DOT National Highway-Rail Grade Crossing Inventory Number and street or highway name, if applicable.

(ii) A statement of the time period within which restrictions would be imposed on the routine sounding of the locomotive horn (i.e., 24 hours or from 10 p.m. until 7 a.m.).

(iii) A brief explanation of the public authority's tentative plans for implementing improvements within the proposed quiet zone.

(iv) The name and title of the person who will act as point of contact during the quiet zone development process and the manner in which that person can be contacted.

(v) A list of the names and addresses of each party that will receive notification in accordance with paragraph (a)(1) of this section.

(3) *60-day comment period*. (i) A party that receives a copy of the public authority's Notice of Intent may submit information or comments about the proposed quiet zone to the public authority during the 60-day period after the date on which the Notice of Intent was mailed.

(ii) The 60-day comment period established under paragraph (b)(3)(i) of this section may terminate when the public authority obtains from each railroad operating over public highway-rail grade crossings within the proposed quiet zone, the State agency responsible for grade crossing safety, and the

State agency responsible for highway and road safety:

(A) Written comments; or

(B) Written statements that the railroad and State agency do not have any comments on the Notice of Intent (''no-comment statements'').

(c) *Notice of Quiet Zone Continuation*—(1) *Timing*. (i) In order to prevent the resumption of locomotive horn sounding on June 24, 2005, the Notice of Quiet Zone Continuation under § 222.41 or 222.42 of this part shall be served no later than June 3, 2005.

(ii) If the Notice of Quiet Zone Continuation under § 222.41 or 222.42 of this part is mailed after June 3, 2005, the Notice of Quiet Zone Continuation shall state on which date locomotive horn use at grade crossings within the quiet zone shall cease, but in no event shall that date be earlier than 21 days after the date of mailing.

(2) *Required Contents*. The Notice of Quiet Zone Continuation shall include the following:

(i) A list of each public, private, and pedestrian grade crossing within the quiet zone, identified by both U.S. DOT National Highway-Rail Grade Crossing Inventory Number and street or highway name.

(ii) A specific reference to the regulatory provision that provides the basis for quiet zone continuation, citing as appropriate, § 222.41 or 222.42 of this part.

(iii) A statement of the time period within which restrictions on the routine sounding of the locomotive horn will be imposed (i.e., 24 hours or nighttime hours only.)

(iv) An accurate and complete Grade Crossing Inventory Form for each public, private, and pedestrian grade crossing within the quiet zone that reflects conditions currently existing at the crossing.

(v) The name and title of the person responsible for monitoring compliance with the requirements of this part and the manner in which that person can be contacted.

(vi) A list of the names and addresses of each party that will receive notification in accordance with paragraph (a)(2) of this section.

(vii) A statement signed by the chief executive officer of each public authority participating in the continuation of the quiet zone, in which the chief executive officer certifies that the information submitted by the public authority is accurate and complete to the best of his/her knowledge and belief.

(d) *Notice of Quiet Zone Establishment*—(1) *Timing*. (i) The Notice of Quiet Zone Establishment shall provide the date upon which the quiet zone will be established, but in no event shall the date be earlier than 21 days after the date of mailing.

(ii) If the public authority was required to provide a Notice of Intent, in accordance with paragraph (a)(1) of this section, the Notice of Quiet Zone Establishment shall not be mailed less than 60 days after the date on which the Notice of Intent was mailed, unless the Notice of Quiet Zone Establishment contains a written statement affirming that written comments and/or ''no-comment'' statements have been received from each railroad operating over public highway-rail grade crossings within the proposed quiet zone, the State agency responsible for grade crossing safety, and the State agency responsible for highway and road safety, in accordance with paragraph (b)(3)(ii) of this section.

(2) *Required contents*. The Notice of Quiet Zone Establishment shall include the following:

(i) A list of each public, private, and pedestrian grade crossing within the quiet zone, identified by both U.S. DOT National Highway-Rail Grade Crossing Inventory Number and street or highway name, if applicable.

(ii) A specific reference to the regulatory provision that provides the basis for quiet zone establishment, citing as appropriate, § 222.39(a)(1), 222.39(a)(2)(i), 222.39(a)(2)(ii), 222.39(a)(3), 222.39(b), 222.41(a)(1)(i), 222.41(a)(1)(ii), 222.41(a)(1)(iii), 222.41(a)(1)(iv), 222.41(b)(1)(i), 222.41(b)(1)(ii), 222.41(b)(1)(iii), or 222.41(b)(1)(iv) of this part.

(A) If the Notice contains a specific reference to § 222.39(a)(2)(i), 222.39(a)(2)(ii), 222.39(a)(3), 222.41(a)(1)(ii), 222.41(a)(1)(iii), 222.41(a)(1)(iv), 222.41(b)(1)(ii), 222.41(b)(1)(iii), or 222.41(b)(1)(iv) of this part, it shall include a copy of the FRA Web page that contains the quiet zone

data upon which the public authority is relying (*http://www.fra.dot.gov/us/content/1337*).

(B) If the Notice contains a specific reference to § 222.39(b) of this part, it shall include a copy of FRA's notification of approval.

(iii) If a diagnostic team review was required under § 222.25 or 222.27 of this part, the Notice shall include a statement affirming that the State agency responsible for grade crossing safety and all affected railroads were provided an opportunity to participate in the diagnostic team review. The Notice shall also include a list of recommendations made by the diagnostic team.

(iv) A statement of the time period within which restrictions on the routine sounding of the locomotive horn will be imposed (i.e., 24 hours or from 10 p.m. until 7 a.m.).

(v) An accurate and complete Grade Crossing Inventory Form for each public, private, and pedestrian grade crossing within the quiet zone that reflects the conditions existing at the crossing before any new SSMs or ASMs were implemented.

(vi) An accurate, complete and current Grade Crossing Inventory Form for each public, private, and pedestrian grade crossing within the quiet zone that reflects SSMs and ASMs in place upon establishment of the quiet zone. SSMs and ASMs that cannot be fully described on the Inventory Form shall be separately described.

(vii) If the public authority was required to provide a Notice of Intent, in accordance with paragraph (a)(1) of this section, the Notice of Quiet Zone Establishment shall contain a written statement affirming that the Notice of Intent was provided in accordance with paragraph (a)(1) of this section. This statement shall also state the date on which the Notice of Intent was mailed.

(viii) If the public authority was required to provide a Notice of Intent, in accordance with paragraph (a)(1) of this section, and the Notice of Intent was mailed less than 60 days before the mailing of the Notice of Quiet Zone Establishment, the Notice of Quiet Zone Establishment shall also contain a written statement affirming that written comments and/or ''no-comment'' statements have been received from each railroad operating over public highway-rail grade crossings within the proposed quiet zone, the State agency responsible for grade crossing safety, and the State agency responsible for highway and road safety, in accordance with paragraph (b)(3)(ii) of this section.

(ix) The name and title of the person responsible for monitoring compliance with the requirements of this part and the manner in which that person can be contacted.

(x) A list of the names and addresses of each party that shall be notified in accordance with paragraph (a)(3) of this section.

(xi) A statement signed by the chief executive officer of each public authority participating in the establishment of the quiet zone, in which the chief executive officer shall certify that the information submitted by the public authority is accurate and complete to the best of his/her knowledge and belief.

§ 222.45 When is a railroad required to cease routine sounding of locomotive horns at crossings?

On the date specified in a Notice of Quiet Zone Continuation or Notice of Quiet Zone Establishment that complies with the requirements set forth in § 222.43 of this part, a railroad shall refrain from, or cease, routine sounding of the locomotive horn at all public, private and pedestrian grade crossings identified in the Notice.

§ 222.47 What periodic updates are required?

(a) *Quiet zones with SSMs at each public crossing.* This paragraph addresses quiet zones established pursuant to §§ 222.39(a)(1), 222.41(a)(1)(i), and 222.41(b)(1)(i) (quiet zones with an SSM implemented at every public crossing within the quiet zone) of this part. Between 4½ and 5 years after the date of the quiet zone establishment notice provided by the public authority under § 222.43 of this part, and between 4½ and 5 years after the last affirmation under this section, the public authority must:

(1) Affirm in writing to the Associate Administrator that the SSMs implemented within the quiet zone continue

to conform to the requirements of appendix A of this part. Copies of such affirmation must be provided by certified mail, return receipt requested, to the parties identified in § 222.43(a)(3) of this part; and

(2) Provide to the Associate Administrator an up-to-date, accurate, and complete Grade Crossing Inventory Form for each public highway-rail grade crossing, private highway-rail grade crossing, and pedestrian crossing within the quiet zone.

(b) *Quiet zones which do not have a supplementary safety measure at each public crossing*. This paragraph addresses quiet zones established pursuant to §§ 222.39(a)(2) and (a)(3), § 222.39(b), §§ 222.41(a)(1)(ii), (a)(1)(iii), and (a)(1)(iv), and §§ 222.41(b)(1)(ii), (b)(1)(iii), and (b)(1)(iv) (quiet zones which do not have an SSM at every public crossing within the quiet zone) of this part. Between 2½ and 3 years after the date of the quiet zone establishment notice provided by the public authority under § 222.43 of this part, and between 2½ and 3 years after the last affirmation under this section, the public authority must:

(1) Affirm in writing to the Associate Administrator that all SSMs and ASMs implemented within the quiet zone continue to conform to the requirements of Appendices A and B of this part or the terms of the Quiet Zone approval. Copies of such notification must be provided to the parties identified in § 222.43(a)(3) of this part by certified mail, return receipt requested; and

(2) Provide to the Associate Administrator an up-to-date, accurate, and complete Grade Crossing Inventory Form for each public highway-rail grade crossing, private highway-rail grade crossing, and pedestrian grade crossing within the quiet zone.

§ 222.49 Who may file Grade Crossing Inventory Forms?

(a) Grade Crossing Inventory Forms required to be filed with the Associate Administrator in accordance with §§ 222.39, 222.43 and 222.47 of this part may be filed by the public authority if, for any reason, such forms are not timely submitted by the State and railroad.

(b) Within 30 days after receipt of a written request of the public authority, the railroad owning the line of railroad that includes public or private highway rail grade crossings within the quiet zone or proposed quiet zone shall provide to the State and public authority sufficient current information regarding the grade crossing and the railroad's operations over the grade crossing to enable the State and public authority to complete the Grade Crossing Inventory Form.

§ 222.51 Under what conditions will quiet zone status be terminated?

(a) *New Quiet Zones—Annual risk review*. (1) FRA will annually calculate the Quiet Zone Risk Index for each quiet zone established pursuant to §§ 222.39(a)(2) and 222.39(b) of this part, and in comparison to the Nationwide Significant Risk Threshold. FRA will notify each public authority of the Quiet Zone Risk Index for the preceding calendar year. FRA will not conduct annual risk reviews for quiet zones established by having an SSM at every public crossing within the quiet zone or for quiet zones established by reducing the Quiet Zone Risk Index to the Risk Index With Horns.

(2) *Actions to be taken by public authority to retain quiet zone*. If the Quiet Zone Risk Index is above the Nationwide Significant Risk Threshold, the quiet zone will terminate six months from the date of receipt of notification from FRA that the Quiet Zone Risk Index exceeds the Nationwide Significant Risk Threshold, unless the public authority takes the following actions:

(i) Within six months after the date of receipt of notification from FRA that the Quiet Zone Risk Index exceeds the Nationwide Significant Risk Threshold, provide to the Associate Administrator a written commitment to lower the potential risk to the traveling public at the crossings within the quiet zone to a level at, or below, the Nationwide Significant Risk Threshold or the Risk Index With Horns. Included in the commitment statement shall be a discussion of the specific steps to be taken by the public authority to increase safety at the crossings within the quiet zone; and

(ii) Within three years after the date of receipt of notification from FRA that the Quiet Zone Risk Index exceeds the Nationwide Significant Risk Threshold, complete implementation of SSMs or ASMs sufficient to reduce the Quiet Zone Risk Index to a level at, or below, the Nationwide Significant Risk Threshold, or the Risk Index With Horns, and receive approval from the Associate Administrator, under the procedures set forth in § 222.39(b) of this part, for continuation of the quiet zone. If the Quiet Zone Risk Index is reduced to the Risk Index With Horns, the quiet zone will be considered to have been established pursuant to § 222.39(a)(3) of this part and subsequent annual risk reviews will not be conducted for that quiet zone.

(iii) Failure to comply with paragraph (a)(2)(i) of this section shall result in the termination of the quiet zone six months after the date of receipt of notification from FRA that the Quiet Zone Risk Index exceeds the Nationwide Significant Risk Threshold. Failure to comply with paragraph (a)(2)(ii) of this section shall result in the termination of the quiet zone three years after the date of receipt of notification from FRA that the Quiet Zone Risk Index exceeds the Nationwide Significant Risk Threshold.

(b) *Pre-Rule Quiet Zones—Annual risk review.* (1) FRA will annually calculate the Quiet Zone Risk Index for each Pre-Rule Quiet Zone and Pre-Rule Partial Quiet Zone that qualified for automatic approval pursuant to §§ 222.41(a)(1)(ii), 222.41(a)(1)(iii), 222.41(b)(1)(ii), and 222.41(b)(1)(iii) of this part. FRA will notify each public authority of the Quiet Zone Risk Index for the preceding calendar year. FRA will also notify each public authority if a relevant collision occurred at a grade crossing within the quiet zone during the preceding calendar year.

(2) *Pre-Rule Quiet Zones and Pre-Rule Partial Quiet Zones authorized under §§ 222.41(a)(1)(ii) and 222.41(b)(1)(ii).* (i) If a Pre-Rule Quiet Zone or Pre-Rule Partial Quiet Zone originally qualified for automatic approval because the Quiet Zone Risk Index was at, or below, the Nationwide Significant Risk Threshold, the quiet zone may continue unchanged if the Quiet Zone Risk Index as last calculated by the FRA remains at, or below, the Nationwide Significant Risk Threshold.

(ii) If the Quiet Zone Risk Index as last calculated by FRA is above the Nationwide Significant Risk Threshold, but is lower than twice the Nationwide Significant Risk Threshold and no relevant collisions have occurred at crossings within the quiet zone within the five years preceding the annual risk review, then the quiet zone may continue as though it originally received automatic approval pursuant to § 222.41(a)(1)(iii) or 222.41(b)(1)(iii) of this part.

(iii) If the Quiet Zone Risk Index as last calculated by FRA is at, or above, twice the Nationwide Significant Risk Threshold, or if the Quiet Zone Risk Index is above the Nationwide Significant Risk Threshold, but is lower than twice the Nationwide Significant Risk Threshold *and* a relevant collision occurred at a crossing within the quiet zone within the preceding five calendar years, the quiet zone will terminate six months after the date of receipt of notification from FRA of the Nationwide Significant Risk Threshold level, unless the public authority takes the actions specified in paragraph (b)(4) of this section.

(3) *Pre-Rule Quiet Zones and Pre-Rule Partial Quiet Zones authorized under §§ 222.41(a)(1)(iii) and 222.41(b)(1)(iii).* (i) If a Pre-Rule Quiet Zone or Pre-Rule Partial Quiet Zone originally qualified for automatic approval because the Quiet Zone Risk Index was above the Nationwide Significant Risk Threshold, but below twice the Nationwide Significant Risk Threshold, and no relevant collisions had occurred within the five-year qualifying period, the quiet zone may continue unchanged if the Quiet Zone Risk Index as last calculated by FRA remains below twice the Nationwide Significant Risk Threshold and no relevant collisions occurred at a public grade crossing within the quiet zone during the preceding calendar year.

(ii) If the Quiet Zone Risk Index as last calculated by FRA is at, or above, twice the Nationwide Significant Risk Threshold, or if a relevant collision occurred at a public grade crossing within the quiet zone during the preceding

calendar year, the quiet zone will terminate six months after the date of receipt of notification from FRA that the Quiet Zone Risk Index is at, or exceeds twice the Nationwide Significant Risk Threshold or that a relevant collision occurred at a crossing within the quiet zone, unless the public authority takes the actions specified in paragraph (b)(4) of this section.

(4) *Actions to be taken by the public authority to retain a quiet zone.*

(i) Within six months after the date of FRA notification, the public authority shall provide to the Associate Administrator a written commitment to lower the potential risk to the traveling public at the crossings within the quiet zone by reducing the Quiet Zone Risk Index to a level at, or below, the Nationwide Significant Risk Threshold or the Risk Index With Horns. Included in the commitment statement shall be a discussion of the specific steps to be taken by the public authority to increase safety at the public crossings within the quiet zone; and

(ii) Within three years of the date of FRA notification, the public authority shall complete implementation of SSMs or ASMs sufficient to reduce the Quiet Zone Risk Index to a level at, or below, the Nationwide Significant Risk Threshold, or the Risk Index With Horns, and receive approval from the Associate Administrator, under the procedures set forth in § 222.39(b) of this part, for continuation of the quiet zone. If the Quiet Zone Risk Index is reduced to a level that fully compensates for the absence of the train horn, the quiet zone will be considered to have been established pursuant to § 222.39(a)(3) of this part and subsequent annual risk reviews will not be conducted for that quiet zone.

(iii) Failure to comply with paragraph (b)(4)(i) of this section shall result in the termination of the quiet zone six months after the date of receipt of notification from FRA. Failure to comply with paragraph (b)(4)(ii) of this section shall result in the termination of the quiet zone three years after the date of receipt of notification from FRA.

(c) *Review at FRA's initiative.* (1) The Associate Administrator may, at any time, review the status of any quiet zone.

(2) If the Associate Administrator makes any of the following preliminary determinations, the Associate Administrator will provide written notice to the public authority, all railroads operating over public highway-rail grade crossings within the quiet zone, the highway or traffic control authority or law enforcement authority having control over vehicular traffic at the crossings within the quiet zone, the landowner having control over any private crossings within the quiet zone, the State agency responsible for grade crossing safety, and the State agency responsible for highway and road safety and will publish a notice of the determination in the FEDERAL REGISTER:

(i) Safety systems and measures implemented within the quiet zone do not fully compensate for the absence of the locomotive horn due to a substantial increase in risk;

(ii) Documentation relied upon to establish the quiet zone contains substantial errors that may have an adverse impact on public safety; or

(iii) Significant risk with respect to loss of life or serious personal injury exists within the quiet zone.

(3) After providing an opportunity for comment, the Associate Administrator may require that additional safety measures be taken or that the quiet zone be terminated. The Associate Administrator will provide a copy of his/her decision to the public authority and all parties listed in paragraph (c)(2) of this section. The public authority may appeal the Associate Administrator's decision in accordance with § 222.57(c) of this part. Nothing in this section is intended to limit the Administrator's emergency authority under 49 U.S.C. 20104 and 49 CFR part 211.

(d) *Termination by the public authority.* (1) Any public authority that participated in the establishment of a quiet zone under the provisions of this part may, at any time, withdraw its quiet zone status.

(2) A public authority may withdraw its quiet zone status by providing written notice of termination, by certified mail, return receipt requested, to all railroads operating the public highway-rail grade crossings within the quiet

zone, the highway or traffic control authority or law enforcement authority having control over vehicular traffic at the crossings within the quiet zone, the landowner having control over any private crossings within the quiet zone, the State agency responsible for grade crossing safety, the State agency responsible for highway and road safety, and the Associate Administrator.

(3)(i) If the quiet zone that is being withdrawn was part of a multi-jurisdictional quiet zone, the remaining quiet zones may remain in effect, provided the public authorities responsible for the remaining quiet zones provide statements to the Associate Administrator certifying that the Quiet Zone Risk Index for each remaining quiet zone is at, or below, the Nationwide Significant Risk Threshold or the Risk Index With Horns. These statements shall be provided, no later than six months after the date on which the notice of quiet zone termination was mailed, to all parties listed in paragraph (d)(2) of this section.

(ii) If any remaining quiet zone has a Quiet Zone Risk Index in excess of the Nationwide Significant Risk Threshold and the Risk Index With Horns, the public authority responsible for the quiet zone shall submit a written commitment, to all parties listed in paragraph (d)(2) of this section, to reduce the Quiet Zone Risk Index to a level at or below the Nationwide Significant Risk Threshold or the Risk Index With Horns within three years. Included in the commitment statement shall be a discussion of the specific steps to be taken by the public authority to reduce the Quiet Zone Risk Index. This commitment statement shall be provided to all parties listed in paragraph (d)(2) of this section no later than six months after the date on which the notice of quiet zone termination was mailed.

(iii) Failure to comply with paragraphs (d)(3)(i) and (d)(3)(ii) of this section shall result in the termination of the remaining quiet zone(s) six months after the date on which the notice of quiet zone termination was mailed by the withdrawing public authority in accordance with paragraph (d)(2) of this section.

(iv) Failure to complete implementation of SSMs and/or ASMs to reduce the Quiet Zone Risk Index to a level at, or below, the Nationwide Significant Risk Index or the Risk Index With Horns, in accordance with the written commitment provided under paragraph (d)(3)(ii) of this section, shall result in the termination of quiet zone status three years after the date on which the written commitment was received by FRA.

(e) *Notification of termination.* (1) In the event that a quiet zone is terminated under the provisions of this section, it shall be the responsibility of the public authority to immediately provide written notification of the termination by certified mail, return receipt requested, to all railroads operating over public highway-rail grade crossings within the quiet zone, the highway or traffic control authority or law enforcement authority having control over vehicular traffic at the crossings within the quiet zone, the landowner having control over any private crossings within the quiet zone, the State agency responsible for grade crossing safety, the State agency responsible for highway and road safety, and the Associate Administrator.

(2) Notwithstanding paragraph (e)(1) of this section, if a quiet zone is terminated under the provisions of this section, FRA shall also provide written notification to all parties listed in paragraph (e)(1) of this section.

(f) *Requirement to sound the locomotive horn.* Upon receipt of notification of quiet zone termination pursuant to paragraph (e) of this section, railroads shall, within seven days, and in accordance with the provisions of this part, sound the locomotive horn when approaching and passing through every public highway-rail grade crossing within the former quiet zone.

§ 222.53 What are the requirements for supplementary and alternative safety measures?

(a) Approved SSMs are listed in appendix A of this part. Approved SSMs can qualify for quiet zone risk reduction credit in the manner specified in appendix A of this part.

(b) Additional ASMs that may be included in a request for FRA approval of

a quiet zone under § 222.39(b) of this part are listed in appendix B of this part. Modified SSMs can qualify for quiet zone risk reduction credit in the manner specified in appendix B of this part.

(c) The following do not, individually or in combination, constitute SSMs or ASMs: Standard traffic control device arrangements such as reflectorized crossbucks, STOP signs, flashing lights, or flashing lights with gates that do not completely block travel over the line of railroad, or traffic signals.

§ 222.55 How are new supplementary or alternative safety measures approved?

(a) The Associate Administrator may add new SSMs and standards to appendix A of this part and new ASMs and standards to appendix B of this part when the Associate Administrator determines that such measures or standards are an effective substitute for the locomotive horn in the prevention of collisions and casualties at public highway-rail grade crossings.

(b) Interested parties may apply for approval from the Associate Administrator to demonstrate proposed new SSMs or ASMs to determine whether they are effective substitutes for the locomotive horn in the prevention of collisions and casualties at public highway-rail grade crossings.

(c) The Associate Administrator may, after notice and opportunity for comment, order railroad carriers operating over a public highway-rail grade crossing or crossings to temporarily cease the sounding of locomotive horns at such crossings to demonstrate proposed new SSMs or ASMs, provided that such proposed new SSMs or ASMs have been subject to prior testing and evaluation. In issuing such order, the Associate Administrator may impose any conditions or limitations on such use of the proposed new SSMs or ASMs which the Associate Administrator deems necessary in order to provide the level of safety at least equivalent to that provided by the locomotive horn.

(d) Upon completion of a demonstration of proposed new SSMs or ASMs, interested parties may apply to the Associate Administrator for their approval. Applications for approval shall be in writing and shall include the following:

(1) The name and address of the applicant;

(2) A description and design of the proposed new SSM or ASM;

(3) A description and results of the demonstration project in which the proposed SSMs or ASMs were tested;

(4) Estimated costs of the proposed new SSM or ASM; and

(5) Any other information deemed necessary.

(e) If the Associate Administrator is satisfied that the proposed safety measure fully compensates for the absence of the warning provided by the locomotive horn, the Associate Administrator will approve its use as an SSM to be used in the same manner as the measures listed in appendix A of this part, or the Associate Administrator may approve its use as an ASM to be used in the same manner as the measures listed in appendix B of this part. The Associate Administrator may impose any conditions or limitations on use of the SSMs or ASMs which the Associate Administrator deems necessary in order to provide the level of safety at least equivalent to that provided by the locomotive horn.

(f) If the Associate Administrator approves a new SSM or ASM, the Associate Administrator will: Notify the applicant, if any; publish notice of such action in the FEDERAL REGISTER; and add the measure to the list of approved SSMs or ASMs.

(g) A public authority or other interested party may appeal to the Administrator from a decision by the Associate Administrator granting or denying an application for approval of a proposed SSM or ASM, or the conditions or limitations imposed on its use, in accordance with § 222.57 of this part.

§ 222.57 Can parties seek review of the Associate Administrator's actions?

(a) A public authority or other interested party may petition the Administrator for review of any decision by the Associate Administrator granting or denying an application for approval of a new SSM or ASM under § 222.55 of this part. The petition must be filed within 60 days of the decision to be reviewed,

specify the grounds for the requested relief, and be served upon the following parties: All railroads ordered to temporarily cease sounding of the locomotive horn over public highway-rail grade crossings for the demonstration of the proposed new SSM or ASM , the highway or traffic control authority or law enforcement authority having control over vehicular traffic at the crossings affected by the new SSM/ASM demonstration, the State agency responsible for grade crossing safety, the State agency responsible for highway and road safety, and the Associate Administrator. Unless the Administrator specifically provides otherwise, and gives notice to the petitioner or publishes a notice in the FEDERAL REGISTER, the filing of a petition under this paragraph does not stay the effectiveness of the action sought to be reviewed. The Administrator may reaffirm, modify, or revoke the decision of the Associate Administrator without further proceedings and shall notify the petitioner and other interested parties in writing or by publishing a notice in the FEDERAL REGISTER.

(b) A public authority may request reconsideration of a decision by the Associate Administrator to deny an application by that authority for approval of a quiet zone, or to require additional safety measures, by filing a petition for reconsideration with the Associate Administrator. The petition must specify the grounds for asserting that the Associate Administrator improperly exercised his/her judgment in finding that the proposed SSMs and ASMs would not result in a Quiet Zone Risk Index that would be at or below the Risk Index With Horns or the Nationwide Significant Risk Threshold. The petition shall be filed within 60 days of the date of the decision to be reconsidered and be served upon all parties listed in § 222.39(b)(3) of this part. Upon receipt of a timely and proper petition, the Associate Administrator will provide the petitioner an opportunity to submit additional materials and to request an informal hearing. Upon review of the additional materials and completion of any hearing requested, the Associate Administrator shall issue a decision on the petition that will be administratively final.

(c) A public authority may request reconsideration of a decision by the Associate Administrator to terminate quiet zone status by filing a petition for reconsideration with the Associate Administrator. The petition must be filed within 60 days of the date of the decision, specify the grounds for the requested relief, and be served upon all parties listed in § 222.51(c)(2) of this part. Unless the Associate Administrator publishes a notice in the FEDERAL REGISTER that specifically stays the effectiveness of his/her decision, the filing of a petition under this paragraph will not stay the termination of quiet zone status. Upon receipt of a timely and proper petition, the Associate Administrator will provide the petitioner an opportunity to submit additional materials and to request an informal hearing. Upon review of the additional materials and completion of any hearing requested, the Associate Administrator shall issue a decision on the petition that will be administratively final. A copy of this decision shall be served upon all parties listed in § 222.51(c)(2) of this part.

(d) A railroad may request reconsideration of a decision by the Associate Administrator to approve an application for approval of a proposed quiet zone under § 222.39(b) of this part by filing a petition for reconsideration with the Associate Administrator. The petition must specify the grounds for asserting that the Associate Administrator improperly exercised his/her judgment in finding that the proposed SSMs and ASMs would result in a Quiet Zone Risk Index that would be at or below the Risk Index With Horns or the Nationwide Significant Risk Threshold. The petition shall be filed within 60 days of the date of the decision to be reconsidered, and be served upon all parties listed in § 222.39(b)(3) of this part. Upon receipt of a timely and proper petition, the Associate Administrator will provide the petitioner an opportunity to submit additional materials and to request an informal hearing. Upon review of the additional materials and completion of any hearing requested, the Associate Administrator shall issue a decision that will be administratively final.

§ 222.59 When may a wayside horn be used?

(a)(1) A wayside horn conforming to the requirements of appendix E of this part may be used in lieu of a locomotive horn at any highway-rail grade crossing equipped with an active warning system consisting of, at a minimum, flashing lights and gates.

(2) A wayside horn conforming to the requirements of appendix E of this part may be installed within a quiet zone. For purposes of calculating the length of a quiet zone, the presence of a wayside horn at a highway-grade crossing within a quiet zone shall be considered in the same manner as a grade crossing treated with an SSM. A grade crossing equipped with a wayside horn shall not be considered in calculating the Quiet Zone Risk Index or Crossing Corridor Risk Index.

(b) A public authority installing a wayside horn at a grade crossing within a quiet zone shall provide written notice that a wayside horn is being installed to all railroads operating over the public highway-rail grade crossings within the quiet zone, the highway or traffic control authority or law enforcement authority having control over vehicular traffic at the crossings within the quiet zone, the landowner having control over any private crossings within the quiet zone, the State agency responsible for grade crossing safety, the State agency responsible for highway and road safety, and the Associate Administrator. This notice shall provide the date on which the wayside horn will be operational and identify the grade crossing at which the wayside horn shall be installed by both the U.S. DOT National Highway-Rail Grade Crossing Inventory Number and street or highway name. The railroad or public authority shall provide notification of the operational date at least 21 days in advance.

(c) A railroad or public authority installing a wayside horn at a grade crossing located outside a quiet zone shall provide written notice that a wayside horn is being installed to all railroads operating over the public highway-rail grade crossing, the highway or traffic control authority or law enforcement authority having control over vehicular traffic at the crossing, the State agency responsible for grade crossing safety, the State agency responsible for highway and road safety, and the Associate Administrator. This notice shall provide the date on which the wayside horn will be operational and identify the grade crossing at which the wayside horn shall be installed by both the U.S. DOT National Highway-Rail Grade Crossing Inventory Number and street or highway name. The railroad or public authority shall provide notification of the operational date at least 21 days in advance.

(d) A railroad operating over a grade crossing equipped with an operational wayside horn installed within a quiet zone pursuant to this section shall cease routine locomotive horn use at the grade crossing. A railroad operating over a grade crossing that is equipped with a wayside horn and located outside of a quiet zone shall cease routine locomotive horn use at the grade crossing on the operational date specified in the notice required by paragraph (c) of this section.

APPENDIX A TO PART 222—APPROVED SUPPLEMENTARY SAFETY MEASURES

A. Requirements and Effectiveness Rates for Supplementary Safety Measures

This section provides a list of approved supplementary safety measures (SSMs) that may be installed at highway-rail grade crossings within quiet zones for risk reduction credit. Each SSM has been assigned an effectiveness rate, which may be subject to adjustment as research and demonstration projects are completed and data is gathered and refined. Sections B and C govern the process through which risk reduction credit for pre-existing SSMs can be determined.

1. *Temporary Closure of a Public Highway-Rail Grade Crossing:* Close the crossing to highway traffic during designated quiet periods. (This SSM can only be implemented within Partial Quiet Zones.)

Effectiveness: 1.0.

Because an effective closure system prevents vehicle entrance onto the crossing, the probability of a collision with a train at the crossing is zero during the period the crossing is closed. Effectiveness would therefore equal 1. However, analysis should take into consideration that traffic would need to be redistributed among adjacent crossings or grade separations for the purpose of estimating risk following the silencing of train horns, unless the particular ''closure'' was accomplished by a grade separation.

Required:

a. The closure system must completely block highway traffic on all approach lanes to the crossing.

b. The closure system must completely block adjacent pedestrian crossings.

c. Public highway-rail grade crossings located within New Partial Quiet Zones shall be closed from 10 p.m. until 7 a.m. every day. Public highway-rail grade crossings located within Pre-Rule Partial Quiet Zones may only be closed during one period each 24 hours.

d. Barricdes and signs used for closure of the roadway shall conform to the standards contained in the MUTCD.

e. Daily activation and deactivation of the system is the responsibility of the public authority responsible for maintenance of the street or highway crossing the railroad tracks. The public authority may provide for third party activation and deactivation; however, the public authority shall remain fully responsible for compliance with the requirements of this part.

f. The system must be tamper and vandal resistant to the same extent as other traffic control devices.

g. The closure system shall be equipped with a monitoring device that contains an indicator which is visible to the train crew prior to entering the crossing. The indicator shall illuminate whenever the closure device is deployed.

Recommended:

Signs for alternate highway traffic routes should be erected in accordance with MUTCD and State and local standards and should inform pedestrians and motorists that the streets are closed, the period for which they are closed, and that alternate routes must be used.

2. *Four-Quadrant Gate System:* Install gates at a crossing sufficient to fully block highway traffic from entering the crossing when the gates are lowered, including at least one gate for each direction of traffic on each approach.

Effectiveness:

Four-quadrant gates only, no presence detection: .82.

Four-quadrant gates only, with presence detection: .77.

Four-quadrant gates with traffic of at least 60 feet (with or without presence detection): .92.

NOTE: The higher effectiveness rate for four-quadrant gates without presence detection does not mean that they are inherently safer than four-quadrant gates with presence detection. Four-quadrant gates with presence detection have been assigned a lower effectiveness rate because motorists may learn to delay the lowering of the exit gates by driving onto the opposing lane of traffic immediately after an opposing car has driven over the grade crossing. Since the presence detection will keep the exit gate raised, other motorists at the crossing who observe this scenario may also be tempted to take advantage of the raised exit gate by driving around the lowered entrance gates, thus increasing the potential for a crossing collision.

It should, however, be noted that there are site-specific circumstances (such as nearby highway intersections that could cause traffic to back up and stop on the grade crossing), under which the use of presence detection would be advisable. For this reason, the various effectiveness rates assigned to four-quadrant gate systems should not be the sole determining factor as to whether presence detection would be advisable. A site-specific study should be performed to determine the best application for each proposed installation. Please refer to paragraphs (f) and (g) for more information.

Required:

Four-quadrant gate systems shall conform to the standards for four-quadrant gates contained in the MUTCD and shall, in addition, comply with the following:

a. When a train is approaching, all highway approach and exit lanes on both sides of the highway-rail crossing must be spanned by gates, thus denying to the highway user the option of circumventing the conventional approach lane gates by switching into the opposing (oncoming) traffic lane in order to enter the crossing and cross the tracks.

b. Crossing warning systems must be activated by use of constant warning time devices unless existing conditions at the crossing would prevent the proper operation of the constant warning time devices.

c. Crossing warning systems must be equipped with power-out indicators.

NOTE: Requirements b and c apply only to New Quiet Zones or New Partial Quiet Zones. Constant warning time devices and power-out indicators are not required to be added to existing warning systems in Pre-Rule Quiet Zones and Pre-Rule Partial Quiet Zones. However, if existing automatic warning device systems in Pre-Rule Quiet Zones and Pre-Rule Partial Quiet Zones are renewed, or new automatic warning device systems are installed, power-out indicators and constant warning time devices are required, unless existing conditions at the crossing would prevent the proper operation of the constant warning devices.

d. The gap between the ends of the entrance and exit gates (on the same side of the railroad tracks) when both are in the fully lowered, or down, position must be less than two feet if no median is present. If the highway approach is equipped with a median or a channelization device between the approach and exit lanes, the lowered gates must reach to within one foot of the median or channelization device, measured horizontally across the road from the end of the

lowered gate to the median or channelization device or to a point over the edge of the median or channelization device. The gate and the median top or channelization device do not have to be at the same elevation.

e. ''Break-away'' channelization devices must be frequently monitored to replace broken elements.

Recommendations for new installations only:

f. Gate timing should be established by a qualified traffic engineer based on site specific determinations. Such determination should consider the need for and timing of a delay in the descent of the exit gates (following descent of the conventional entrance gates). Factors to be considered may include available storage space between the gates that is outside the fouling limits of the track(s) and the possibility that traffic flows may be interrupted as a result of nearby intersections.

g. A determination should be made as to whether it is necessary to provide vehicle presence detectors (VPDs) to open or keep open the exit gates until all vehicles are clear of the crossing. VPD should be installed on one or both sides of the crossing and/or in the surface between the rails closest to the field. Among the factors that should be considered are the presence of intersecting roadways near the crossing, the priority that the traffic crossing the railroad is given at such intersections, the types of traffic control devices at those intersections, and the presence and timing of traffic signal preemption.

h. Highway approaches on one or both sides of the highway-rail crossing may be provided with medians or channelization devices between the opposing lanes. Medians should be defined by a non-traversable curb or traversable curb, or by reflectorized channelization devices, or by both.

i. Remote monitoring (in addition to power-out indicators, which are required) of the status of these crossing systems is preferable. This is especially important in those areas in which qualified railroad signal department personnel are not readily available.

3. *Gates With Medians or Channelization Devices:* Install medians or channelization devices on both highway approaches to a public highway-rail grade crossing denying to the highway user the option of circumventing the approach lane gates by switching into the opposing (oncoming) traffic lane and driving around the lowered gates to cross the tracks.

Effectiveness:

Channelization devices—.75.

Non-traversable curbs with or without channelization devices— .80.

Required:

a. Opposing traffic lanes on both highway approaches to the crossing must be separated by either: (1) medians bounded by non-traversable curbs or (2) channelization devices.

b. Medians or channelization devices must extend at least 100 feet from the gate arm, or if there is an intersection within 100 feet of the gate, the median or channelization device must extend at least 60 feet from the gate arm.

c. Intersections of two or more streets, or a street and an alley, that are within 60 feet of the gate arm must be closed or relocated. Driveways for private, residential properties (up to four units) within 60 feet of the gate arm are not considered to be intersections under this part and need not be closed. However, consideration should be given to taking steps to ensure that motorists exiting the driveways are not able to move against the flow of traffic to circumvent the purpose of the median and drive around lowered gates. This may be accomplished by the posting of ''no left turn'' signs or other means of notification. For the purpose of this part, driveways accessing commercial properties are considered to be intersections and are not allowed. It should be noted that if a public authority can not comply with the 60 feet or 100 feet requirement, it may apply to FRA for a quiet zone under §222.39(b), ''Public authority application to FRA.'' Such arrangement may qualify for a risk reduction credit in calculation of the Quiet Zone Risk Index. Similarly, if a public authority finds that it is feasible to only provide channelization on one approach to the crossing, it may also apply to FRA for approval under §222.39(b). Such an arrangement may also qualify for a risk reduction credit in calculation of the Quiet Zone Risk Index.

d. Crossing warning systems must be activated by use of constant warning time devices unless existing conditions at the crossing would prevent the proper operation of the constant warning time devices.

e. Crossing warning systems must be equipped with power-out indicators. Note: Requirements d and e apply only to New Quiet Zones and New Partial Quiet Zones. Constant warning time devices and power-out indicators are not required to be added to existing warning systems in Pre-Rule Quiet Zones or Pre-Rule Partial Quiet Zones. However, if existing automatic warning device systems in Pre-Rule Quiet Zones and Pre-Rule Partial Quiet Zones are renewed, or new automatic warning device systems are installed, power-out indicators and constant warning time devices are required, unless existing conditions at the crossing would prevent the proper operation of the constant warning devices.

f. The gap between the lowered gate and the curb or channelization device must be one foot or less, measured horizontally across the road from the end of the lowered gate to the curb or channelization device or

to a point over the curb edge or channelization device. The gate and the curb top or channelization device do not have to be at the same elevation.

g. ''Break-away'' channelization devices must be frequently monitored to replace broken elements.

4. *One Way Street with Gate(s):* Gate(s) must be installed such that all approaching highway lanes to the public highway-rail grade crossing are completely blocked.

Effectiveness: .82.

Required:

a. Gate arms on the approach side of the crossing should extend across the road to within one foot of the far edge of the pavement. If a gate is used on each side of the road, the gap between the ends of the gates when both are in the lowered, or down, position must be no more than two feet.

b. If only one gate is used, the edge of the road opposite the gate mechanism must be configured with a non-traversable curb extending at least 100 feet.

c. Crossing warning systems must be activated by use of constant warning time devices unless existing conditions at the crossing would prevent the proper operation of the constant warning time devices.

d. Crossing warning systems must be equipped with power-out indicators.

NOTE: Requirements c and d apply only to New Quiet Zones and New Partial Quiet Zones. Constant warning time devices and power-out indicators are not required to be added to existing warning systems in Pre-Rule Quiet Zones or Pre-Rule Partial Quiet Zones. If automatic warning systems are, however, installed or renewed in a Pre-Rule Quiet or Pre-Rule Partial Quiet Zone, power-out indicators and constant warning time devices shall be installed, unless existing conditions at the crossing would prevent the proper operation of the constant warning time devices.

5. *Permanent Closure of a Public Highway-Rail Grade Crossing:* Permanently close the crossing to highway traffic.

Effectiveness: 1.0.

Required:

a. The closure system must completely block highway traffic from entering the grade crossing.

b. Barricades and signs used for closure of the roadway shall conform to the standards contained in the MUTCD.

c. The closure system must be tamper and vandal resistant to the same extent as other traffic control devices.

d. Since traffic will be redistributed among adjacent crossings, the traffic counts for adjacent crossings shall be increased to reflect the diversion of traffic from the closed crossing.

B. Credit for Pre-Existing SSMs in New Quiet Zones and New Partial Quiet Zones

A community that has implemented a pre-existing SSM at a public grade crossing can receive risk reduction credit by inflating the Risk Index With Horns as follows:

1. Calculate the current risk index for the grade crossing that is equipped with a qualifying, pre-existing SSM. (See appendix D. FRA's web-based Quiet Zone Calculator may be used to complete this calculation.)

2. Adjust the risk index by accounting for the increased risk that was avoided by implementing the pre-existing SSM at the public grade crossing. This adjustment can be made by dividing the risk index by one minus the SSM effectiveness rate. (For example, the risk index for a crossing equipped with pre-existing channelization devices would be divided by .25.)

3. Add the current risk indices for the other public grade crossings located within the proposed quiet zone and divide by the number of crossings. The resulting risk index will be the new Risk Index With Horns for the proposed quiet zone.

C. Credit for Pre-Existing SSMs in Pre-Rule Quiet Zones and Pre-Rule Partial Quiet Zones

A community that has implemented a pre-existing SSM at a public grade crossing can receive risk reduction credit by inflating the Risk Index With Horns as follows:

1. Calculate the current risk index for the grade crossing that is equipped with a qualifying, pre-existing SSM. (See appendix D. FRA's web-based Quiet Zone Calculator may be used to complete this calculation.)

2. Reduce the current risk index for the grade crossing to reflect the risk reduction that would have been achieved if the locomotive horn was routinely sounded at the crossing. The following list sets forth the estimated risk reduction for certain types of crossings:

a. Risk indices for passive crossings shall be reduced by 43%;

b. Risk indices for grade crossings equipped with automatic flashing lights shall be reduced by 27%; and

c. Risk indices for gated crossings shall be reduced by 40%.

3. Adjust the risk index by accounting for the increased risk that was avoided by implementing the pre-existing SSM at the public grade crossing. This adjustment can be made by dividing the risk index by one minus the SSM effectiveness rate. (For example, the risk index for a crossing equipped with pre-existing channelization devices would be divided by .25.)

4. Adjust the risk indices for the other crossings that are included in the Pre-Rule Quiet Zone or Pre-Rule Partial Quiet Zone by reducing the current risk index to reflect the risk reduction that would have been

achieved if the locomotive horn was routinely sounded at each crossing. Please refer to step two for the list of approved risk reduction percentages by crossing type.

5. Add the new risk indices for each crossing located within the proposed quiet zone and divide by the number of crossings. The resulting risk index will be the new Risk Index With Horns for the quiet zone.

APPENDIX B TO PART 222—ALTERNATIVE SAFETY MEASURES

Introduction

A public authority seeking approval of a quiet zone under public authority application to FRA (§222.39(b)) may include ASMs listed in this appendix in its proposal. This appendix addresses three types of ASMs: Modified SSMs, Non-Engineering ASMs, and Engineering ASMs. Modified SSMs are SSMs that do not fully comply with the provisions listed in appendix A. As provided in section I.B. of this appendix, public authorities can obtain risk reduction credit for pre-existing modified SSMs under the final rule. Non-engineering ASMs consist of programmed enforcement, public education and awareness, and photo enforcement programs that may be used to reduce risk within a quiet zone. Engineering ASMs consist of engineering improvements that address underlying geometric conditions, including sight distance, that are the source of increased risk at crossings.

I. MODIFIED SSMS

A. Requirements and Effectiveness Rates for Modified SSMs

1. If there are unique circumstances pertaining to a specific crossing or number of crossings which prevent SSMs from being fully compliant with all of the SSM requirements listed in appendix A, those SSM requirements may be adjusted or revised. In that case, the SSM, as modified by the public authority, will be treated as an ASM under this appendix B, and not as a SSM under appendix A. After reviewing the estimated safety effect of the modified SSM and the proposed quiet zone, FRA will approve the proposed quiet zone if FRA finds that the Quiet Zone Risk Index will be reduced to a level at or below either the Risk Index With Horns or the Nationwide Significant Risk Threshold.

2. The public authority must provide estimates of effectiveness. These estimates may be based upon adjustments from the effectiveness levels provided in appendix A or from actual field data derived from the crossing sites. The specific crossing and applied mitigation measure will be assessed to determine the effectiveness of the modified SSM. FRA will continue to develop and make available effectiveness estimates and data from experience under the final rule.

3. If one or more of the requirements associated with an SSM as listed in appendix A is revised or deleted, data or analysis supporting the revision or deletion must be provided to FRA for review. The following engineering types of ASMs may be included in a proposal for approval by FRA for creation of a quiet zone: (1) Temporary Closure of a Public Highway-Rail Grade Crossing, (2) Four-Quadrant Gate System, (3) Gates With Medians or Channelization Devices, and (4) One-Way Street With Gate(s).

B. Credit for Pre-Existing Modified SSMs in New Quiet Zones and New Partial Quiet Zones

A community that has implemented a pre-existing modified SSM at a public grade crossing can receive risk reduction credit by inflating the Risk Index With Horns as follows:

1. Calculate the current risk index for the grade crossing that is equipped with a pre-existing modified SSM. (See appendix D. FRA's web-based Quiet Zone Calculator may be used to complete this calculation.)

2. Obtain FRA approval of the estimated effectiveness rate for the pre-existing modified SSM. Estimated effectiveness rates may be based upon adjustments from the SSM effectiveness rates provided in appendix A or actual field data derived from crossing sites.

3. Adjust the risk index by accounting for the increased risk that was avoided by implementing the pre-existing modified SSM at the public grade crossing. This adjustment can be made by dividing the risk index by one minus the FRA-approved modified SSM effectiveness rate.

4. Add the current risk indices for the other public grade crossings located within the proposed quiet zone and divide by the number of crossings. The resulting risk index will be the new Risk Index With Horns for the proposed quiet zone.

C. Credit for Pre-Existing Modified SSMs in Pre-Rule Quiet Zones and Pre-Rule Partial Quiet Zones

A community that has implemented a pre-existing modified SSM at a public grade crossing can receive risk reduction credit by inflating the Risk Index With Horns as follows:

1. Calculate the current risk index for the grade crossing that is equipped with a pre-existing modified SSM. (See appendix D. FRA's web-based Quiet Zone Calculator may be used to complete this calculation.)

2. Reduce the current risk index for the grade crossing to reflect the risk reduction that would have been achieved if the locomotive horn was routinely sounded at the

crossing. The following list sets forth the estimated risk reduction for certain types of crossings:

a. Risk indices for passive crossings shall be reduced by 43%;

b. Risk indices for grade crossings equipped with automatic flashing lights shall be reduced by 27%; and

c. Risk indices for gated crossings shall be reduced by 40%.

3. Obtain FRA approval of the estimated effectiveness rate for the pre-existing modified SSM. Estimated effectiveness rates may be based upon adjustments from the SSM effectiveness rates provided in appendix A or actual field data derived from crossing sites.

4. Adjust the risk index by accounting for the increased risk that was avoided by implementing the pre-existing modified SSM at the public grade crossing. This adjustment can be made by dividing the risk index by one minus the FRA-approved modified SSM effectiveness rate.

5. Adjust the risk indices for the other crossings that are included in the Pre-Rule Quiet Zone or Pre-Rule Partial Quiet Zone by reducing the current risk index to reflect the risk reduction that would have been achieved if the locomotive horn was routinely sounded at each crossing. Please refer to step two for the list of approved risk reduction percentages by crossing type.

6. Add the new risk indices for each crossing located within the proposed quiet zone and divide by the number of crossings. The resulting risk index will be the new Risk Index With Horns for the quiet zone.

II. Non-Engineering ASMs

A. The following non-engineering ASMs may be used in the creation of a Quiet Zone: (The method for determining the effectiveness of the non-engineering ASMs, the implementation of the quiet zone, subsequent monitoring requirements, and dealing with an unacceptable effectiveness rate is provided in paragraph B.)

1. *Programmed Enforcement:* Community and law enforcement officials commit to a systematic and measurable crossing monitoring and traffic law enforcement program at the public highway-rail grade crossing, alone or in combination with the Public Education and Awareness ASM.

Required:

a. Subject to audit, a statistically valid baseline violation rate must be established through automated or systematic manual monitoring or sampling at the subject crossing(s); and

b. A law enforcement effort must be defined, established and continued along with continual or regular monitoring that provides a statistically valid violation rate that indicates the effectiveness of the law enforcement effort.

c. The public authority shall retain records pertaining to monitoring and sampling efforts at the grade crossing for a period of not less than five years. These records shall be made available, upon request, to FRA as provided by 49 U.S.C. 20107.

2. *Public Education and Awareness:* Conduct, alone or in combination with programmed law enforcement, a program of public education and awareness directed at motor vehicle drivers, pedestrians and residents near the railroad to emphasize the risks associated with public highway-rail grade crossings and applicable requirements of state and local traffic laws at those crossings.

Requirements:

a. Subject to audit, a statistically valid baseline violation rate must be established through automated or systematic manual monitoring or sampling at the subject crossing(s); and

b. A sustainable public education and awareness program must be defined, established and continued along with continual or regular monitoring that provides a statistically valid violation rate that indicates the effectiveness of the public education and awareness effort. This program shall be provided and supported primarily through local resources.

c. The public authority shall retain records pertaining to monitoring and sampling efforts at the grade crossing for a period of not less than five years. These records shall be made available, upon request, to FRA as provided by 49 U.S.C. 20107.

3. *Photo Enforcement:* This ASM entails automated means of gathering valid photographic or video evidence of traffic law violations at a public highway-rail grade crossing together with follow-through by law enforcement and the judiciary.

Requirements:

a. State law authorizing use of photographic or video evidence both to bring charges and sustain the burden of proof that a violation of traffic laws concerning public highway-rail grade crossings has occurred, accompanied by commitment of administrative, law enforcement and judicial officers to enforce the law;

b. Sanction includes sufficient minimum fine (e.g., $100 for a first offense, ''points'' toward license suspension or revocation) to deter violations;

c. Means to reliably detect violations (e.g., loop detectors, video imaging technology);

d. Photographic or video equipment deployed to capture images sufficient to document the violation (including the face of the driver, if required to charge or convict under state law).

NOTE: This does not require that each crossing be continually monitored. The objective of this option is deterrence, which may be accomplished by moving photo/video equipment among several crossing locations,

as long as the motorist perceives the strong possibility that a violation will lead to sanctions. Each location must appear identical to the motorist, whether or not surveillance equipment is actually placed there at the particular time. Surveillance equipment should be in place and operating at each crossing at least 25 percent of each calendar quarter.

e. Appropriate integration, testing and maintenance of the system to provide evidence supporting enforcement;

f. Public awareness efforts designed to reinforce photo enforcement and alert motorists to the absence of train horns;

g. Subject to audit, a statistically valid baseline violation rate must be established through automated or systematic manual monitoring or sampling at the subject crossing(s); and

h. A law enforcement effort must be defined, established and continued along with continual or regular monitoring.

i. The public authority shall retain records pertaining to monitoring and sampling efforts at the grade crossing for a period of not less than five years. These records shall be made available, upon request, to FRA as provided by 49 U.S.C. 20107.

B. The effectiveness of an ASM will be determined as follows:

1. Establish the quarterly (three months) baseline violation rates for each crossing in the proposed quiet zone.

a. A violation in this context refers to a motorist not complying with the automatic warning devices at the crossing (not stopping for the flashing lights and driving over the crossing after the gate arms have started to descend, or driving around the lowered gate arms). A violation does not have to result in a traffic citation for the violation to be considered.

b. Violation data may be obtained by any method that can be shown to provide a statistically valid sample. This may include the use of video cameras, other technologies (e.g., inductive loops), or manual observations that capture driver behavior when the automatic warning devices are operating.

c. If data is not collected continuously during the quarter, sufficient detail must be provided in the application in order to validate that the methodology used results in a statistically valid sample. FRA recommends that at least a minimum of 600 samples (one sample equals one gate activation) be collected during the baseline and subsequent quarterly sample periods.

d. The sampling methodology must take measures to avoid biases in their sampling technique. Potential sampling biases could include: Sampling on certain days of the week but not others; sampling during certain times of the day but not others; sampling immediately after implementation of an ASM while the public is still going through an adjustment period; or applying one sample method for the baseline rate and another for the new rate.

e. The baseline violation rate should be expressed as the number of violations per gate activations in order to normalize for unequal gate activations during subsequent data collection periods.

f. All subsequent quarterly violation rate calculations must use the same methodology as stated in this paragraph unless FRA authorizes another methodology.

2. The ASM should then be initiated for each crossing. Train horns are still being sounded during this time period.

3. In the calendar quarter following initiation of the ASM, determine a new quarterly violation rate using the same methodology as in paragraph (1) above.

4. Determine the violation rate reduction for each crossing by the following formula:

Violation rate reduction = (new rate − baseline rate)/baseline rate

5. Determine the effectiveness rate of the ASM for each crossing by multiplying the violation rate reduction by .78.

6. Using the effectiveness rates for each grade crossing treated by an ASM, determine the Quiet Zone Risk Index. If and when the Quiet Zone Risk Index for the proposed quiet zone has been reduced to a level at, or below, the Risk Index With Horns or the Nationwide Significant Risk Threshold, the public authority may apply to FRA for approval of the proposed quiet zone. Upon receiving written approval of the quiet zone application from FRA, the public authority may then proceed with notifications and implementation of the quiet zone.

7. Violation rates must be monitored for the next two calendar quarters and every second quarter thereafter. If, after five years from the implementation of the quiet zone, the violation rate for any quarter has never exceeded the violation rate that was used to determine the effectiveness rate that was approved by FRA, violation rates may be monitored for one quarter per year.

8. In the event that the violation rate is ever greater than the violation rate used to determine the effectiveness rate that was approved by FRA, the public authority may continue the quiet zone for another quarter. If, in the second quarter the violation rate is still greater than the rate used to determine the effectiveness rate that was approved by FRA, a new effectiveness rate must be calculated and the Quiet Zone Risk Index recalculated using the new effectiveness rate. If the new Quiet Zone Risk Index indicates that the ASM no longer fully compensates for the lack of a train horn, or that the risk level is equal to, or exceeds the National Significant Risk Threshold, the procedures for dealing with unacceptable effectiveness after

establishment of a quiet zone should be followed.

III. ENGINEERING ASMS

A. Engineering improvements, other than modified SSMs, may be used in the creation of a Quiet Zone. These engineering improvements, which will be treated as ASMs under this appendix, may include improvements that address underlying geometric conditions, including sight distance, that are the source of increased risk at the crossing.

B. The effectiveness of an Engineering ASM will be determined as follows:

1. Establish the quarterly (three months) baseline violation rate for the crossing at which the Engineering ASM will be applied.

a. A violation in this context refers to a motorist not complying with the automatic warning devices at the crossing (not stopping for the flashing lights and driving over the crossing after the gate arms have started to descend, or driving around the lowered gate arms). A violation does not have to result in a traffic citation for the violation to be considered.

b. Violation data may be obtained by any method that can be shown to provide a statistically valid sample. This may include the use of video cameras, other technologies (e.g. inductive loops), or manual observations that capture driver behavior when the automatic warning devices are operating.

c. If data is not collected continuously during the quarter, sufficient detail must be provided in the application in order to validate that the methodology used results in a statistically valid sample. FRA recommends that at least a minimum of 600 samples (one sample equals one gate activation) be collected during the baseline and subsequent quarterly sample periods.

d. The sampling methodology must take measures to avoid biases in their sampling technique. Potential sampling biases could include: Sampling on certain days of the week but not others; sampling during certain times of the day but not others; sampling immediately after implementation of an ASM while the public is still going through an adjustment period; or applying one sample method for the baseline rate and another for the new rate.

e. The baseline violation rate should be expressed as the number of violations per gate activations in order to normalize for unequal gate activations during subsequent data collection periods.

f. All subsequent quarterly violation rate calculations must use the same methodology as stated in this paragraph unless FRA authorizes another methodology.

2. The Engineering ASM should be initiated at the crossing. Train horns are still being sounded during this time period.

3. In the calendar quarter following initiation of the Engineering ASM, determine a new quarterly violation rate using the same methodology as in paragraph (1) above.

4. Determine the violation rate reduction for the crossing by the following formula:

Violation rate reduction = (new rate − baseline rate)/baseline rate

5. Using the Engineering ASM effectiveness rate, determine the Quiet Zone Risk Index. If and when the Quiet Zone Risk Index for the proposed quiet zone has been reduced to a risk level at or below the Risk Index With Horns or the Nationwide Significant Risk Threshold, the public authority may apply to FRA for approval of the quiet zone. Upon receiving written approval of the quiet zone application from FRA, the public authority may then proceed with notifications and implementation of the quiet zone.

6. Violation rates must be monitored for the next two calendar quarters. Unless otherwise provided in FRA's notification of quiet zone approval, if the violation rate for these two calendar quarters does not exceed the violation rate that was used to determine the effectiveness rate that was approved by FRA, the public authority can cease violation rate monitoring.

7. In the event that the violation rate over either of the next two calendar quarters are greater than the violation rate used to determine the effectiveness rate that was approved by FRA, the public authority may continue the quiet zone for a third calendar quarter. However, if the third calendar quarter violation rate is also greater than the rate used to determine the effectiveness rate that was approved by FRA, a new effectiveness rate must be calculated and the Quiet Zone Risk Index re-calculated using the new effectiveness rate. If the new Quiet Zone Risk Index exceeds the Risk Index With Horns and the Nationwide Significant Risk Threshold, the procedures for dealing with unacceptable effectiveness after establishment of a quiet zone should be followed.

APPENDIX C TO PART 222—GUIDE TO ESTABLISHING QUIET ZONES

Introduction

This Guide to Establishing Quiet Zones (Guide) is divided into five sections in order to address the variety of methods and conditions that affect the establishment of quiet zones under this rule.

Section I of the Guide provides an overview of the different ways in which a quiet zone may be established under this rule. This includes a brief discussion on the safety thresholds that must be attained in order for train horns to be silenced and the relative merits of each. It also includes the two general methods that may be used to reduce risk in the proposed quiet zone, and the different impacts that the methods have on the quiet zone implementation process. This section

also discusses Partial (e.g. night time only quiet zones) and Intermediate Quiet Zones. An Intermediate Quiet Zone is one where horn restrictions were in place after October 9, 1996, but as of December 18, 2003.

Section II of the Guide provides information on establishing New Quiet Zones. A New Quiet Zone is one at which train horns are currently being sounded at crossings. The Public Authority Designation and Public Authority Application to FRA methods will be discussed in depth.

Section III of the Guide provides information on establishing Pre-Rule Quiet Zones. A Pre-Rule Quiet Zone is one where train horns were not routinely sounded as of October 9, 1996 and December 18, 2003. The differences between New and Pre-Rule Quiet Zones will be explained. Public Authority Designation and Public Authority Application to FRA methods also apply to Pre-Rule Quiet Zones.

Section IV of the Guide deals with the required notifications that must be provided by public authorities when establishing both New and continuing Pre-Rule or Intermediate Quiet Zones.

Section V of the Guide provides examples of quiet zone implementation.

SECTION I—OVERVIEW

In order for a quiet zone to be qualified under this rule, it must be shown that the lack of the train horn does not present a significant risk with respect to loss of life or serious personal injury, or that the significant risk has been compensated for by other means. The rule provides four basic ways in which a quiet zone may be established. Creation of both New Quiet Zones and Pre-Rule Quiet Zones are based on the same general guidelines; however, there are a number of differences that will be noted in the discussion on Pre-Rule Quiet Zones.

A. Qualifying Conditions

(1) One of the following four conditions or scenarios must be met in order to show that the lack of the train horn does not present a significant risk, or that the significant risk has been compensated for by other means:

a. One or more SSMs as identified in appendix A are installed at each public crossing in the quiet zone; or

b. The Quiet Zone Risk Index is equal to, or less than, the Nationwide Significant Risk Threshold without implementation of additional safety measures at any crossings in the quiet zone; or

c. Additional safety measures are implemented at selected crossings resulting in the Quiet Zone Risk Index being reduced to a level equal to, or less than, the Nationwide Significant Risk Threshold; or

d. Additional safety measures are taken at selected crossings resulting in the Quiet Zone Risk Index being reduced to at least the level of the Risk Index With Horns (that is, the risk that would exist if train horns were sounded at every public crossing in the quiet zone).

(2) It is important to consider the implications of each approach before deciding which one to use. If a quiet zone is qualified based on reference to the Nationwide Significant Risk Threshold (i.e. the Quiet Zone Risk Index is equal to, or less than, the Nationwide Significant Risk Threshold—see the second and third scenarios above), then an annual review will be done by FRA to determine if the Quiet Zone Risk Index remains equal to, or less than, the Nationwide Significant Risk Threshold. Since the Nationwide Significant Risk Threshold and the Quiet Zone Risk Index may change from year to year, there is no guarantee that the quiet zone will remain qualified. The circumstances that cause the disqualification may not be subject to the control of the public authority. For example, an overall national improvement in safety at gated crossings may cause the Nationwide Significant Risk Threshold to fall. This may cause the Quiet Zone Risk Index to become greater than the Nationwide Significant Risk Threshold. If the quiet zone is no longer qualified, then the public authority will have to take additional measures, and may incur additional costs that might not have been budgeted, to once again lower the Quiet Zone Risk Index to at least the Nationwide Significant Risk Threshold in order to retain the quiet zone. Therefore, while the initial cost to implement a quiet zone under the second or third scenario may be lower than the other options, these scenarios also carry a degree of uncertainty about the quiet zone's continued existence.

(3) The use of the first or fourth scenarios reduces the risk level to at least the level that would exist if train horns were sounding in the quiet zone. These methods may have higher initial costs because more safety measures may be necessary in order to achieve the needed risk reduction. Despite the possibility of greater initial costs, there are several benefits to these methods. The installation of SSMs at every crossing will provide the greatest safety benefit of any of the methods that may be used to initiate a quiet zone. With both of these methods (first and fourth scenarios), the public authority will never need to be concerned about the Nationwide Significant Risk Threshold, annual reviews of the Quiet Zone Risk Index, or failing to be qualified because the Quiet Zone Risk Index is higher than the Nationwide Significant Risk Threshold. Public authorities are strongly encouraged to carefully consider both the pros and cons of all of the methods and to choose the method that will best meet the needs of its citizens by providing a safer and quieter community.

(4) For the purposes of this Guide, the term ''Risk Index with Horns'' is used to represent the level of risk that would exist if train horns were sounded at every public crossing in the proposed quiet zone. If a public authority decides that it would like to fully compensate for the lack of a train horn and not install SSMs at each public crossing in the quiet zone, it must reduce the Quiet Zone Risk Index to a level that is equal to, or less than, the Risk Index with Horns. The Risk Index with Horns is similar to the Nationwide Significant Risk Threshold in that both are targets that must be reached in order to establish a quiet zone under the rule. Quiet zones that are established by reducing the Quiet Zone Risk Index to at least the level of the Nationwide Significant Risk Threshold will be reviewed annually by FRA to determine if they still qualify under the rule to retain the quiet zone. Quiet zones that are established by reducing the Quiet Zone Risk Index to at least the level of the Risk Index with Horns will not be subject to annual reviews.

(5) The use of FRA's web-based Quiet Zone Calculator is recommended to aid in the decision making process (*http://www.fra.dot.gov/us/content/1337*). The Quiet Zone Calculator will allow the public authority to consider a variety of options in determining which SSMs make the most sense. It will also perform the necessary calculations used to determine the existing risk level and whether enough risk has been mitigated in order to create a quiet zone under this rule.

B. Risk Reduction Methods

FRA has established two general methods to reduce risk in order to have a quiet zone qualify under this rule. The method chosen impacts the manner in which the quiet zone is implemented.

1. *Public Authority Designation (SSMs)*—The Public Authority Designation method (§222.39(a)) involves the use of SSMs (see appendix A) at some or all crossings within the quiet zone. The use of only SSMs to reduce risk will allow a public authority to designate a quiet zone without approval from FRA. If the public authority installs SSMs at every crossing within the quiet zone, it need not demonstrate that they will reduce the risk sufficiently in order to qualify under the rule since FRA has already assessed the ability of the SSMs to reduce risk. In other words, the Quiet Zone Calculator does not need to be used. However, if only SSMs are installed within the quiet zone, but not at every crossing, the public authority must calculate that sufficient risk reduction will be accomplished by the SSMs. Once the improvements are made, the public authority must make the required notifications (which includes a copy of the report generated by the Quiet Zone Calculator showing that the risk in the quiet zone has been sufficiently reduced), and the quiet zone may be implemented. FRA does not need to approve the plan as it has already assessed the ability of the SSMs to reduce risk.

2. *Public Authority Application to FRA (ASMs)*—The Public Authority Application to FRA method (§222.39(b)) involves the use ASMs (see appendix B). ASMs include modified SSMs that do not fully comply with the provisions found in appendix A (e.g., shorter than required traffic channelization devices), non-engineering ASMs (e.g., programmed law enforcement), and engineering ASMs (i.e., engineering improvements other than modified SSMs). If the use of ASMs (or a combination of ASMs and SSMs) is elected to reduce risk, then the public authority must provide a Notice of Intent and then apply to FRA for approval of the quiet zone. The application must contain sufficient data and analysis to confirm that the proposed ASMs do indeed provide the necessary risk reduction. FRA will review the application and will issue a formal approval if it determines that risk is reduced to a level that is necessary in order to comply with the rule. Once FRA approval has been received and the safety measures fully implemented, the public authority would then provide a Notice of Quiet Zone Establishment and the quiet zone may be implemented. The use of non-engineering ASMs will require continued monitoring and analysis throughout the existence of the quiet zone to ensure that risk continues to be reduced.

3. *Calculating Risk Reduction*—The following should be noted when calculating risk reductions in association with the establishment of a quiet zone. This information pertains to both New Quiet Zones and Pre-Rule Quiet Zones and to the Public Authority Designation and Public Authority Application to FRA methods.

Crossing closures: If any public crossing within the quiet zone is proposed to be closed, include that crossing when calculating the Risk Index with Horns. The effectiveness of a closure is 1.0. However, be sure to increase the traffic counts at other crossings within the quiet zone and recalculate the risk indices for those crossings that will handle the traffic diverted from the closed crossing. It should be noted that crossing closures that are already in existence are not considered in the risk calculations.

Example: A proposed New Quiet Zone contains four crossings: A, B, C and D streets. A, B and D streets are equipped with flashing lights and gates. C Street is a passive crossbuck crossing with a traffic count of 400 vehicles per day. It is decided that C Street will be closed as part of the project. Compute the risk indices for all four streets. The calculation for C Street will utilize flashing lights and gates as the warning device. Calculate the Crossing Corridor Risk Index by

averaging the risk indices for all four of the crossings. This value will also be the Risk Index with Horns since train horns are currently being sounded. To calculate the Quiet Zone Risk Index, first re-calculate the risk indices for B and D streets by increasing the traffic count for each crossing by 200. (Assume for this example that the public authority decided that the traffic from C Street would be equally divided between B and D streets.) Increase the risk indices for A, B and D streets by 66.8% and divide the sum of the three remaining crossings by four. This is the initial Quiet Zone Risk Index and accounts for the risk reduction caused by closing C Street.

Grade Separation: Grade separated crossings that were in existence before the creation of a quiet zone are not included in any of the calculations. However, any public crossings within the quiet zone that are proposed to be treated by grade separation should be treated in the same manner as crossing closures. Highway traffic that may be diverted from other crossings within the quiet zone to the new grade separated crossing should be considered when computing the Quiet Zone Risk Index.

Example: A proposed New Quiet Zone contains four crossings: A, B, C and D streets. All streets are equipped with flashing lights and gates. C Street is a busy crossing with a traffic count of 25,000 vehicles per day. It is decided that C Street will be grade separated as part of the project and the existing at-grade crossing closed. Compute the risk indices for all four streets. Calculate the Crossing Corridor Risk Index, which will also be the Risk Index with Horns, by averaging the risk indices for all four of the crossings. To calculate the Quiet Zone Risk Index, first recalculate the risk indices for B and D streets by decreasing the traffic count for each crossing by 1,200. (The public authority decided that 2,400 motorists will decide to use the grade separation at C Street in order to avoid possible delays caused by passing trains.) Increase the risk indices for A, B and D streets by 66.8% and divide the sum of the three remaining crossings by four. This is the initial Quiet Zone Risk Index and accounts for the risk reduction caused by the grade separation at C Street.

Pre-Existing SSMs: Risk reduction credit may be taken by a public authority for a SSM that was previously implemented and is currently in place in the quiet zone. If an existing improvement meets the criteria for a SSM as provided in appendix A, the improvement is deemed a Pre-Existing SSM. Risk reduction credit is obtained by inflating the Risk Index With Horns to show what the risk would have been at the crossing if the pre-existing SSM had not been implemented. Crossing closures and grade separations that occurred prior to the implementation of the quiet zone are not Pre-Existing SSMs and do not receive any risk reduction credit.

Example 1. A proposed New Quiet Zone has one crossing that is equipped with flashing lights and gates and has medians 100 feet in length on both sides of the crossing. The medians conform to the requirements in appendix A and qualify as a Pre-Existing SSM. The risk index as calculated for the crossing is 10,000. To calculate the Risk Index With Horns for this crossing, you divide the risk index by difference between one and the effectiveness rate of the pre-existing SSM ($10,000 \div (1–0.75) = 40,000$). This value (40,000) would then be averaged in with the risk indices of the other crossings to determine the proposed quiet zone's Risk Index With Horns. To calculate the Quiet Zone Risk Index, the original risk index is increased by 66.8% to account for the additional risk attributed to the absence of the train horn ($10,000 \times 1.668 = 16,680$). This value (16,680) is then averaged into the risk indices of the other crossings that have also been increased by 66.8%. The resulting average is the Quiet Zone Risk Index.

Example 2. A Pre-Rule Quiet Zone consisting of four crossings has one crossing that is equipped with flashing lights and gates and has medians 100 feet in length on both sides of the crossing. The medians conform to the requirements in appendix A and qualify as a Pre-Existing SSM. The risk index as calculated for the crossing is 20,000. To calculate the Risk Index With Horns for this crossing, first reduce the risk index by 40 percent to reflect the risk reduction that would be achieved if train horns were routinely sounded ($20,000 \times 0.6 = 12,000$). Next, divide the resulting risk index by difference between one and the effectiveness rate of the pre-existing SSM ($12,000 \div (1 - 0.75) = 48,000$). This value (48,000) would then be averaged with the adjusted risk indices of the other crossings to determine the pre-rule quiet zone's Risk Index With Horns. To calculate the Quiet Zone Risk Index, the original risk index (20,000) is then averaged into the risk original indices of the other crossings. The resulting average is the Quiet Zone Risk Index.

Pre-Existing Modified SSMs: Risk reduction credit may be taken by a public authority for a modified SSM that was previously implemented and is currently in place in the quiet zone. Modified SSMs are Alternative Safety Measures which must be approved by FRA. If an existing improvement is approved by FRA as a modified SSM as provided in appendix B, the improvement is deemed a Pre-Existing Modified SSM. Risk reduction credit is obtained by inflating the Risk Index With Horns to show what the risk would have been at the crossing if the pre-existing

SSM had not been implemented. The effectiveness rate of the modified SSM will be determined by FRA. The public authority may provide information to FRA to be used in determining the effectiveness rate of the modified SSM. Once an effectiveness rate has been determined, follow the procedure previously discussed for Pre-Existing SSMs to determine the risk values that will be used in the quiet zone calculations.

Wayside Horns: Crossings with wayside horn installations will be treated as a one for one substitute for the train horn and are not to be included when calculating the Crossing Corridor Risk Index, the Risk Index with Horns or the Quiet Zone Risk Index.

Example: A proposed New Quiet Zone contains four crossings: A, B, C and D streets. All streets are equipped with flashing lights and gates. It is decided that C Street will have a wayside horn installed. Compute the risk indices for A, B and D streets. Since C Street is being treated with a wayside horn, it is not included in the calculation of risk. Calculate the Crossing Corridor Risk Index by averaging the risk indices for A, B and D streets. This value is also the Risk Index with Horns. Increase the risk indices for A, B and D streets by 66.8% and average the results. This is the initial Quiet Zone Risk Index for the proposed quiet zone.

C. Partial Quiet Zones

A Partial Quiet Zone is a quiet zone in which locomotive horns are not routinely sounded at public crossings for a specified period of time each day. For example, a quiet zone during only the nighttime hours would be a partial quiet zone. Partial quiet zones may be either New or Pre-Rule and follow the same rules as 24 hour quiet zones. New Partial Quiet Zones must be in effect during the hours of 10 p.m. to 7 a.m. All New Partial Quiet Zones must comply with all of the requirements for New Quiet Zones. For example, all public grade crossings that are open during the time that horns are silenced must be equipped with flashing lights and gates that are equipped with constant warning time (where practical) and power out indicators. Risk is calculated in exactly the same manner as for New Quiet Zones. The Quiet Zone Risk Index is calculated for the entire 24-hour period, even though the train horn will only be silenced during the hours of 10 p.m. to 7 a.m.

A Pre-Rule Partial Quiet Zone is a partial quiet zone at which train horns were not sounding as of October 9, 1996 and on December 18, 2003. All of the regulations that pertain to Pre-Rule Quiet Zones also pertain to Pre-Rule Partial Quiet Zones. The Quiet Zone Risk Index is calculated for the entire 24-hour period for Pre-Rule Partial Quiet Zones, even though train horns are only silenced during the nighttime hours. Pre-Rule Partial Quiet Zones may qualify for automatic approval in the same manner as Pre-Rule Quiet Zones with one exception. If the Quiet Zone Risk Index is less than twice the National Significant Risk Threshold, and there have been no relevant collisions during the time period when train horns are silenced, then the Pre-Rule Partial Quiet Zone is automatically qualified. In other words, a relevant collision that occurred during the period of time that train horns were sounded will not disqualify a Pre-Rule Partial Quiet Zone that has a Quiet Zone Risk Index that is less than twice the National Significant Risk Index. Pre-Rule Partial Quiet Zones must provide the notification as required in §222.43 in order to keep train horns silenced. A Pre-Rule Partial Quiet Zone may be converted to a 24 hour New Quiet Zone by complying with all of the New Quiet Zone regulations.

D. Intermediate Quiet Zones

An Intermediate Quiet Zone is one where horn restrictions were in place after October 9, 1996, but as of December 18, 2003 (the publication date of the Interim Final Rule). Intermediate Quiet Zones and Intermediate Partial Quiet Zones will be able to keep train horns silenced until June 24, 2006, provided notification is made per §222.43. This will enable public authority to have additional time to make the improvement necessary to come into compliance with the rule. Intermediate Quiet Zones must conform to all the requirements for New Quiet Zones by June 24, 2006. Other than having the horn silenced for an additional year, Intermediate Quiet Zones are treated exactly like New Quiet Zones.

SECTION II—NEW QUIET ZONES

FRA has established several approaches that may be taken in order to establish a New Quiet Zone under this rule. Please see the preceding discussions on ''Qualifying Conditions'' and ''Risk Reduction Methods'' to assist in the decision-making process on which approach to take. This following discussion provides the steps necessary to establish New Quiet Zones and includes both the Public Authority Designation and Public Authority Application to FRA methods. It must be remembered that in a New Quiet Zone all public crossings must be equipped with flashing lights and gates. The requirements are the same regardless of whether a 24-hour or partial quiet zone is being created.

A. Requirements for Both Public Authority Designation and Public Authority Application

The following steps are necessary when establishing a New Quiet Zone. This information pertains to both the Public Authority Designation and Public Authority Application to FRA methods.

1. The public authority must provide a written Notice of Intent (§ 222.43(a)(1) and § 222.43(b)) to the railroads that operate over the proposed quiet zone, the State agency responsible for highway and road safety and the State agency responsible for grade crossing safety. The purpose of this Notice of Intent is to provide an opportunity for the railroads and the State agencies to provide comments and recommendations to the public authority as it is planning the quiet zone. They will have 60 days to provide these comments to the public authority. The quiet zone cannot be created unless the Notice of Intent has been provided. FRA encourages public authorities to provide the required Notice of Intent early in the quiet zone development process. The railroads and State agencies can provide an expertise that very well may not be present within the public authority. FRA believes that it will be very useful to include these organizations in the planning process. For example, including railroads and State agencies in the inspections of the crossing will help ensure accurate Inventory information for the crossings. The railroad can provide information on whether the flashing lights and gates are equipped with constant warning time and power out indicators. Pedestrian crossings and private crossings with public access, industrial or commercial use that are within the quiet zone must have a diagnostic team review and be treated according to the team's recommendations. Railroads and the State agency responsible for grade crossing safety must be invited to the diagnostic team review. Note: Please see Section IV for details on the requirements of a Notice of Intent.

2. Determine all public, private and pedestrian at-grade crossings that will be included within the quiet zone. Also, determine any existing grade-separated crossings that fall within the quiet zone. Each crossing must be identified by the U.S. DOT Crossing Inventory number and street or highway name. If a crossing does not have a U.S. DOT Crossing Inventory number, then contact FRA's Office of Safety (202–493–6299) for assistance.

3. Ensure that the quiet zone will be at least one-half mile in length. (§ 222.35(a)(1)) If more than one New Quiet Zone or New Partial Quiet Zone will be created within a single political jurisdiction, ensure that each New Quiet Zone or New Partial Quiet Zone will be separated by at least one public highway-rail grade crossing. (§ 222.35(a)(1)(iii))

4. A complete and accurate Grade Crossing Inventory Form must be on file with FRA for all crossings (public, private and pedestrian) within the quiet zone. An inspection of each crossing in the proposed quiet zone should be performed and the Grade Crossing Inventory Forms updated, as necessary, to reflect the current conditions at each crossing.

5. Every public crossing within the quiet zone must be equipped with active warning devices comprising both flashing lights and gates. The warning devices must be equipped with power out indicators. Constant warning time circuitry is also required unless existing conditions would prevent the proper operation of the constant warning time circuitry. FRA recommends that these automatic warning devices also be equipped with at least one bell to provide an audible warning to pedestrians. If the warning devices are already equipped with a bell (or bells), the bells may not be removed or deactivated. The plans for the quiet zone may be made assuming that flashing lights and gates are at all public crossings; however the quiet zone may not be implemented until all public crossings are actually equipped with the flashing lights and gates. (§§ 222.35(b)(1) and 222.35(b)(2))

6. Private crossings must have cross-bucks and ''STOP'' signs on both approaches to the crossing. Private crossings with public access, industrial or commercial use must have a diagnostic team review and be treated according to the team's recommendations. The public authority must invite the State agency responsible for grade crossing safety and all affected railroads to participate in the diagnostic review. (§§ 222.25(b) and (c))

7. Each highway approach to every public and private crossing must have an advance warning sign (in accordance with the MUTCD) that advises motorists that train horns are not sounded at the crossing, unless the public or private crossing is equipped with a wayside horn. (§ 222.35(c))

8. Each pedestrian crossing must be reviewed by a diagnostic team and equipped or treated in accordance with the recommendation of the diagnostic team. The public authority must invite the State agency responsible for grade crossing safety and all affected railroads to participate in the diagnostic review. At a minimum, each approach to every pedestrian crossing must be equipped with a sign that conforms to the MUTCD and advises pedestrians that train horns are not sounded at the crossing. (§ 222.27)

B. New Quiet Zones—Public Authority Designation

Once again it should be remembered that all public crossings must be equipped with automatic warning devices consisting of flashing lights and gates in accordance with § 222.35(b). In addition, one of the following conditions must be met in order for a public authority to designate a new quiet zone without FRA approval:

a. One or more SSMs as identified in appendix A are installed at *each* public crossing in the quiet zone (§ 222.39(a)(1)); or

b. The Quiet Zone Risk Index is equal to, or less than, the Nationwide Significant Risk

Threshold without SSMs installed at any crossings in the quiet zone (§ 222.39(a)(2)(i)); or

c. SSMs are installed at selected crossings, resulting in the Quiet Zone Risk Index being reduced to a level equal to, or less than, the Nationwide Significant Risk Threshold (§ 222.39(a)(2)(ii)); or

d. SSMs are installed at selected crossings, resulting in the Quiet Zone Risk Index being reduced to a level of risk that would exist if the horn were sounded at every crossing in the quiet zone (i.e., the Risk Index with Horns) (§ 222.39(a)(3)).

Steps necessary to establish a New Quiet Zone using the Public Authority Application to FRA method:

1. If one or more SSMs as identified in appendix A are installed at each public crossing in the quiet zone, the requirements for a public authority designation quiet zone will have been met. It is not necessary for the same SSM to be used at each crossing. However, before any improvements are implemented, the public authority must provide a Notice of Intent, which will trigger a 60-day comment period. During the 60-day comment period, railroads operating within the proposed quiet zone and State agencies responsible for grade crossing, highway and road safety may submit comments on the proposed quiet zone improvements to the public authority. Once the necessary improvements have been installed, Notice of Quiet Zone Establishment shall be provided and the quiet zone implemented in accordance with the rule. If SSMs are not installed at each public crossing, proceed on to Step 2 and use the risk reduction method.

2. To begin, calculate the risk index for each public crossing within the quiet zone (See appendix D. FRA's web-based Quiet Zone Calculator may be used to do this calculation). If flashing lights and gates have to be installed at any public crossings, calculate the risk indices for such crossings as if lights and gates were installed. (NOTE: Flashing lights and gates must be installed prior to initiation of the quiet zone.) If the Inventory record does not reflect the actual conditions at the crossing, be sure to use the conditions that currently exist when calculating the risk index. Note: Private crossings and pedestrian crossings are not included when computing the risk for the proposed quiet zone.

3. The Crossing Corridor Risk Index is then calculated by averaging the risk index for each public crossing within the proposed quiet zone. Since train horns are routinely being sounded for crossings in the proposed quiet zone, this value is also the Risk Index with Horns.

4. In order to calculate the initial Quiet Zone Risk Index, first adjust the risk index at each public crossing to account for the increased risk due to the absence of the train horn. The absence of the horn is reflected by an increased risk index of 66.8% at gated crossings. The initial Quiet Zone Risk Index is then calculated by averaging the increased risk index for each public crossing within the proposed quiet zone. At this point the Quiet Zone Risk Index will equal the Risk Index with Horns multiplied by 1.668.

5. Compare the Quiet Zone Risk Index to the Nationwide Significant Risk Threshold. If the Quiet Zone Risk Index is equal to, or less than, the Nationwide Significant Risk Threshold, then the public authority may decide to designate a quiet zone and provide the Notice of Intent, followed by the Notice of Quiet Zone Establishment. With this approach, FRA will annually recalculate the Nationwide Significant Risk Threshold and the Quiet Zone Risk Index. If the Quiet Zone Risk Index for the quiet zone rises above the Nationwide Significant Risk Threshold, FRA will notify the Public Authority so that appropriate measures can be taken. (See § 222.51(a)).

6. If the Quiet Zone Risk Index is greater than the Nationwide Significant Risk Threshold, then select an appropriate SSM for a crossing. Reduce the inflated risk index calculated in Step 4 for that crossing by the effectiveness rate of the chosen SSM. (See appendix A for the effectiveness rates for the various SSMs). Recalculate the Quiet Zone Risk Index by averaging the revised inflated risk index with the inflated risk indices for the other public crossings. If this new Quiet Zone Risk Index is equal to, or less than, the Nationwide Significant Risk Threshold, the quiet zone would qualify for public authority designation. If the Quiet Zone Risk Index is still higher than the Nationwide Significant Risk Threshold, treat another public crossing with an appropriate SSM and repeat the process until the Quiet Zone Risk Index is equal to, or less than, the Nationwide Significant Risk Threshold. Once this result is obtained, the quiet zone will qualify for establishment by public authority designation. Early in the quiet zone development process, a Notice of Intent should be provided by the public authority, which will trigger a 60-day comment period. During this 60-day comment period, railroads operating within the proposed quiet zone and State agencies responsible for grade crossing, highway and road safety may provide comments on the proposed quiet zone improvements described in the Notice of Intent. Once all the necessary safety improvements have been implemented, Notice of Quiet Zone Establishment must be provided. With this approach, FRA will annually recalculate the Nationwide Significant Risk Threshold and the Quiet Zone Risk Index. If the Quiet Zone Risk Index for the quiet zone rises above the Nationwide Significant Risk Threshold, FRA

will notify the public authority so that appropriate measures can be taken. (See §222.51(a)).

7. If the public authority wishes to reduce the risk of the quiet zone to the level of risk that would exist if the horn were sounded at every crossing within the quiet zone, the public authority should calculate the initial Quiet Zone Risk Index as in Step 4. The objective is to now reduce the Quiet Zone Risk Index to the level of the Risk Index with Horns by adding SSMs at the crossings. The difference between the Quiet Zone Risk Index and the Risk Index with Horns is the amount of risk that will have to be reduced in order to fully compensate for lack of the train horn. The use of the Quiet Zone Calculator will aid in determining which SSMs may be used to reduce the risk sufficiently. Follow the procedure stated in Step 6, except that the Quiet Zone Risk Index must be equal to, or less than, the Risk Index with Horns instead of the Nationwide Significant Risk Threshold. Once this risk level is attained, the quiet zone will qualify for establishment by public authority designation. Early in the quiet zone development process, a Notice of Intent should be provided by the public authority, which will trigger a 60-day comment period. During this 60-day comment period, railroads operating within the proposed quiet zone and State agencies responsible for grade crossing, highway and road safety may provide comments on the proposed quiet zone improvements described in the Notice of Intent. Once all the necessary safety improvements have been implemented, Notice of Quiet Zone Establishment must be provided. One important distinction with this option is that the public authority will never need to be concerned with the Nationwide Significant Risk Threshold or the Quiet Zone Risk Index. The rule's intent is to make the quiet zone as safe as if the train horns were sounding. If this is accomplished, the public authority may designate the crossings as a quiet zone and need not be concerned with possible fluctuations in the Nationwide Significant Risk Threshold or annual risk reviews.

C. New Quiet Zones—Public Authority Application to FRA

A public authority must apply to FRA for approval of a quiet zone under three conditions. First, if any of the SSMs selected for the quiet zone do not fully conform to the design standards set forth in appendix A. These are referred to as modified SSMs in appendix B. Second, when programmed law enforcement, public education and awareness programs, or photo enforcement is used to reduce risk in the quiet zone, these are referred to as non-engineering ASMs in appendix B. It should be remembered that non-engineering ASMs will require periodic monitoring as long as the quiet zone is in existence. Third, when engineering ASMs are used to reduce risk. Please see appendix B for detailed explanations of ASMs and the periodic monitoring of non-engineering ASMs.

The public authority is strongly encouraged to submit the application to FRA for review and comment before the appendix B treatments are initiated. This will enable FRA to provide comments on the proposed ASMs to help guide the application process. If non-engineering ASMs or engineering ASMs are proposed, the public authority also may wish to confirm with FRA that the methodology it plans to use to determine the effectiveness rates of the proposed ASMs is appropriate. A quiet zone that utilizes a combination of SSMs from appendix A and ASMs from appendix B must make a Public Authority Application to FRA. A complete and thoroughly documented application will help to expedite the approval process.

The following discussion is meant to provide guidance on the steps necessary to establish a new quiet zone using the Public Authority Application to FRA method. Once again it should be remembered that all public crossings must be equipped with automatic warning devices consisting of flashing lights and gates in accordance with §222.35(b).

1. Gather the information previously mentioned in the section on ''Requirements for both Public Authority Designation and Public Authority Application.''

2. Calculate the risk index for each public crossing as directed in Step 2—Public Authority Designation.

3. Calculate the Crossing Corridor Risk Index, which is also the Risk Index with Horns, as directed in Step 3—Public Authority Designation.

4. Calculate the initial Quiet Zone Risk Index as directed in Step 4—Public Authority Designation.

5. Begin to reduce the Quiet Zone Risk Index through the use of ASMs and SSMs. Follow the procedure provided in Step 6—Public Authority Designation until the Quiet Zone Risk Index has been reduced to equal to, or less than, either the Nationwide Significant Risk Threshold or the Risk Index with Horns. (Remember that the public authority may choose which level of risk reduction is the most appropriate for its community.) Effectiveness rates for ASMs should be provided as follows:

a. Modified SSMs—Estimates of effectiveness for modified SSMs may be based upon adjustments from the effectiveness rates provided in appendix A or from actual field data derived from the crossing sites. The application must provide an estimated effectiveness rate and the rationale for the estimate.

b. Non-engineering ASMs—Effectiveness rates are to be calculated in accordance with the provisions of appendix B, paragraph II B.

c. Engineering ASMs—Effectiveness rates are to be calculated in accordance with the provisions of appendix B, paragraph III B.

6. Once it has been determined through analysis that the Quiet Zone Risk Index will be reduced to a level equal to, or less than, either the Nationwide Significant Risk Threshold or the Risk Index with Horns, the public authority must provide a Notice of Intent. The mailing of the Notice of Intent will trigger a 60-day comment period, during which railroads operating within the proposed quiet zone and State agencies responsible for grade crossing, highway and road safety may provide comments on the proposed quiet zone improvements. After reviewing any comments received, the public authority may make application to FRA for a quiet zone under §222.39(b). FRA will review the application to determine the appropriateness of the proposed effectiveness rates, and whether or not the proposed application demonstrates that the quiet zone meets the requirements of the rule. When submitting the application to FRA for approval, the application must contain the following (§222.39(b)(1)):

a. Sufficient detail concerning the present safety measures at all crossings within the proposed quiet zone. This includes current and accurate crossing inventory forms for each public, private, and pedestrian grade crossing.

b. Detailed information on the safety improvements that are proposed to be implemented at public, private and pedestrian grade crossings within the proposed quiet zone.

c. Membership and recommendations of the diagnostic team (if any) that reviewed the proposed quiet zone.

d. Statement of efforts taken to address comments submitted by affected railroads, the State agency responsible for grade crossing safety, and the State agency responsible for highway and road safety, including a list of any objections raised by the railroads or State agencies.

e. A commitment to implement the proposed safety measures.

f. Demonstrate through data and analysis that the proposed measures will reduce the Quiet Zone Risk Index to a level equal to, or less than, either the Nationwide Significant Risk Threshold or the Risk Index with Horns.

g. A copy of the application must be provided to: All railroads operating over the public highway-rail grade crossings within the quiet zone; the highway or traffic control or law enforcement authority having jurisdiction over vehicular traffic at grade crossings within the quiet zone; the landowner having control over any private crossings within the quiet zone; the State agency responsible for highway and road safety; the State agency responsible for grade crossing safety; and the Associate Administrator. (§222.39(b)(3))

7. Upon receiving written approval from FRA of the quiet zone application, the public authority may then provide the Notice of Quiet Zone Establishment and implement the quiet zone. If the quiet zone is qualified by reducing the Quiet Zone Risk Index to a level at, or below, the Nationwide Significant Risk Threshold, FRA will annually recalculate the Nationwide Significant Risk Threshold and the Quiet Zone Risk Index. If the Quiet Zone Risk Index for the quiet zone rises above the Nationwide Significant Risk Threshold, FRA will notify the public authority so that appropriate measures can be taken. (See §222.51(a))

NOTE: The provisions stated above for crossing closures, grade separations, wayside horns, pre-existing SSMs and pre-existing modified SSMs apply for Public Authority Application to FRA as well.

SECTION III—PRE-RULE QUIET ZONES

Pre-Rule Quiet Zones are treated slightly differently from New Quiet Zones in the rule. This is a reflection of the statutory requirement to ''take into account the interest of communities that have in effect restrictions on the sounding of a locomotive horn at highway-rail grade crossings. * * *'' (49 U.S.C. 20153(i)) It also recognizes the historical experience of train horns not being sounded at Pre-Rule Quiet Zones.

Overview

Pre-Rule Quiet Zones that are not established by automatic approval (see discussion that follows) must meet the same requirements as New Quiet Zones as provided in §222.39. In other words, risk must be reduced through the use of SSMs or ASMs so that the Quiet Zone Risk Index for the quiet zone has been reduced to either the risk level which would exist if locomotive horns sounded at all crossings in the quiet zone (*i.e.* the Risk Index with Horns) or to a risk level equal to, or less than, the Nationwide Significant Risk Threshold. There are four differences in the requirements between Pre-Rule Quiet Zones and New Quiet Zones that must be noted.

(1) First, since train horns have not been routinely sounded in the Pre-Rule Quiet Zone, it is not necessary to increase the risk indices of the public crossings to reflect the additional risk caused by the lack of a train horn. Since the train horn has already been silenced, the added risk caused by the lack of a horn is reflected in the actual collision history at the crossings. Collision history is an important part in the calculation of the severity risk indices. In other words, the Quiet Zone Risk Index is calculated by averaging

the existing risk index for each public crossing without the need to increase the risk index by 66.8%. For Pre-Rule Quiet Zones, the Crossing Corridor Risk Index and the initial Quiet Zone Risk Index have the same value.

(2) Second, since train horns have been silenced at the crossings, it will be necessary to mathematically determine what the risk level would have been at the crossings if train horns had been routinely sounded. These revised risk levels then will be used to calculate the Risk Index with Horns. This calculation is necessary to determine how much risk must be eliminated in order to compensate for the lack of the train horn. This will allow the public authority to have the choice to reduce the risk to at least the level of the Nationwide Significant Risk Threshold or to fully compensate for the lack of the train horn.

To calculate the Risk Index with Horns, the first step is to divide the existing severity risk index for each crossing by the appropriate value as shown in Table 1. This process eliminates the risk that was caused by the absence of train horns. The table takes into account that the train horn has been found to produce different levels of effectiveness in preventing collisions depending on the type of warning device at the crossing. (Note: FRA's web-based Quiet Zone Calculator will perform this computation automatically for Pre-Rule Quiet Zones.) The Risk Index with Horns is the average of the revised risk indices. The difference between the calculated Risk Index with Horns and the Quiet Zone Risk Index is the amount of risk that would have to be reduced in order to fully compensate for the lack of train horns.

TABLE 1—RISK INDEX DIVISOR VALUES

	Passive	Flashing lights	Lights & gates
U.S	1.749	1.309	1.668

(3) The third difference is that credit is given for the risk reduction that is brought about through the upgrading of the warning devices at public crossings (§ 222.35(b)(3)). For New Quiet Zones, all crossings must be equipped with automatic warning devices consisting of flashing lights and gates. Crossings without gates must have gates installed. The severity risk index for that crossing is then calculated to establish the risk index that is used in the Risk Index with Horns. The Risk Index with Horns is then increased by 66.8% to adjust for the lack of the train horn. The adjusted figure is the initial Quiet Zone Risk Index. There is no credit received for the risk reduction that is attributable to warning device upgrades in New Quiet Zones.

For Pre-Rule Quiet Zones, the Risk Index with Horns is calculated from the initial risk indices which use the warning devices that are currently installed. If a public authority elects to upgrade an existing warning device as part of its quiet zone plan, the accident prediction value for that crossing will be recalculated based on the upgraded warning device. (Once again, FRA's web-based Quiet Zone Calculator can do the actual computation.) The new accident prediction value is then used in the severity risk index formula to determine the risk index for the crossing. This adjusted risk index is then used to compute the new Quiet Zone Risk Index. This computation allows the risk reduction attributed to the warning device upgrades to be used in establishing a quiet zone.

(4) The fourth difference is that Pre-Rule Quiet Zones have different minimum requirements under § 222.35. A Pre-Rule Quiet Zone may be less than one-half mile in length if that was its length as of October 9, 1996 (§ 222.35(a)(2)). A Pre-Rule Quiet Zone does not have to have automatic warning devices consisting of flashing lights and gates at every public crossing (§ 222.35(b)(3)). The existing crossing safety warning systems in place as of December 18, 2003 may be retained but cannot be downgraded. It also is not necessary for the automatic warning devices to be equipped with constant warning time devices or power out indicators; however, when the warning devices are upgraded, constant warning time and power out indicators will be required if reasonably practical (§ 222.35(b)(3)). Advance warning signs that notify the motorist that train horns are not sounded do not have to be installed on each approach to public, private, and pedestrian grade crossings within the quiet zone until June 24, 2008. (§§ 222.27(d) and 222.35(c)) Similarly, STOP signs and crossbucks do not have to be installed on each approach to private crossings within the quiet zone until June 24, 2008. (§ 222.25(c)).

A. Requirements for Both Public Authority Designation and Public Authority Application—Pre-Rule Quiet Zones

The following is necessary when establishing a Pre-Rule Quiet Zone. This information pertains to Automatic Approval, the Public Authority Designation and Public Authority Application to FRA methods.

1. Determine all public, private and pedestrian at-grade crossings that will be included within the quiet zone. Also determine any existing grade separated crossings that fall within the quiet zone. Each crossing must be identified by the U.S. DOT Crossing Inventory number and street name. If a crossing does not have a U.S. DOT crossing number, then contact FRA for assistance.

2. Document the length of the quiet zone. It is not necessary that the quiet zone be at least one-half mile in length. Pre-Rule Quiet

Zones may be shorter than one-half mile. However, the addition of a new crossing that is not a part of an existing Pre-Rule Quiet Zone to a quiet zone nullifies its pre-rule status, and the resulting New Quiet Zone must be at least one-half mile. The deletion of a crossing from a Pre-Rule Quiet Zone (except through closure or grade separation) must result in a quiet zone that is at least one-half mile in length. It is the intent of the rule to allow adjacent Pre-Rule Quiet Zones to be combined into one large pre-rule quiet zone if the respective public authorities desire to do so. (§ 222.35(a)(2))

3. A complete and accurate Grade Crossing Inventory Form must be on file with FRA for all crossings (public, private and pedestrian) within the quiet zone. An inspection of each crossing in the proposed quiet zone should be performed and the Grade Crossing Inventory Forms updated, as necessary, to reflect the current conditions at each crossing.

4. Pre-Rule Quiet Zones must retain, and may upgrade, the existing grade crossing safety warning systems. Unlike New Quiet Zones, it is not necessary that every public crossing within a Pre-Rule Quiet Zone be equipped with active warning devices comprising both flashing lights and gates. Existing warning devices need not be equipped with power out indicators and constant warning time circuitry. If warning devices are upgraded to flashing lights, or flashing lights and gates, the upgraded equipment must include, as is required for New Quiet Zones, power out indicators and constant warning time devices (if reasonably practical). (§ 222.35(b)(3))

5. By June 24, 2008, private crossings must have cross-bucks and ''STOP'' signs on both approaches to the crossing. (§ 222.25(c))

6. By June 24, 2008, each approach to a public, private, and pedestrian crossing must be equipped with an advance warning sign that conforms to the MUTCD and advises pedestrians and motorists that train horns are not sounded at the crossing. (§§ 222.27(d), 222.35(c))

7. It will be necessary for the public authority to provide a Notice of Quiet Zone Continuation in order to prevent the resumption of locomotive horn sounding when the rule becomes effective. A detailed discussion of the requirements of § 222.43(c) is provided in Section IV of this appendix. The Notice of Quiet Zone Continuation must be provided to the appropriate parties by all Pre-Rule Quiet Zones that have not established quiet zones by automatic approval. This should be done no later than June 3, 2005 to ensure that train horns will not start being sounded on June 24, 2005. A Pre-Rule Quiet Zone may provide a Notice of Quiet Zone Continuation before it has determined whether or not it qualifies for automatic approval. Once it has been determined that the Pre-Rule Quiet Zone will be established by automatic approval, the Public Authority must provide the Notice of Quiet Zone Establishment. This must be accomplished no later than December 24, 2005. If the Pre-Rule Quiet Zone will not be established by automatic approval, the Notice of Quiet Zone Continuation will enable the train horns to be silenced until June 24, 2008. (Please refer to § 222.41(c) for more information.)

B. Pre-Rule Quiet Zones—Automatic Approval

In order for a Pre-Rule Quiet Zone to be established under this rule (§ 222.41(a)), one of the following conditions must be met:

a. One or more SSMs as identified in appendix A are installed at *each* public crossing in the quiet zone;

b. The Quiet Zone Risk Index is equal to, or less than, the Nationwide Significant Risk Threshold;

c. The Quiet Zone Risk Index is above the Nationwide Significant Risk Threshold but less than twice the Nationwide Significant Risk Threshold and there have been no relevant collisions at any public grade crossing within the quiet zone for the preceding five years; or

d. The Quiet Zone Risk Index is equal to, or less than, the Risk Index With Horns.

Additionally, the Pre-Rule Quiet Zone must be in compliance with the minimum requirements for quiet zones (§ 222.35) and the notification requirements in § 222.43.

The following discussion is meant to provide guidance on the steps necessary to determine if a Pre-Rule Quiet Zone qualifies for automatic approval.

1. All of the items listed in *Requirements for Both Public Authority Designation and Public Authority Application—Pre-Rule Quiet Zones* previously mentioned are to be accomplished. Remember that a Pre-Rule Quiet Zone may be less than one-half mile in length if that was its length as of October 9, 1996. Also, a Pre-Rule Quiet Zone does not have to have automatic warning devices consisting of flashing lights and gates at every public crossing.

2. If one or more SSMs as identified in appendix A are installed at each public crossing in the quiet zone, the quiet zone qualifies and the public authority may provide the Notice of Quiet Zone Establishment. If the Pre-Rule Quiet Zone does not qualify by this step, proceed on to the next step.

3. Calculate the risk index for each public crossing within the quiet zone (See appendix D.) Be sure that the risk index is calculated using the formula appropriate for the type of warning device that is actually installed at the crossing. Unlike New Quiet Zones, it is not necessary to calculate the risk index using flashing lights and gates as the warning device at every public crossing. (FRA's web-based Quiet Zone Calculator may be used to simplify the calculation process). If

the Inventory record does not reflect the actual conditions at the crossing, be sure to use the conditions that currently exist when calculating the risk index.

4. The Quiet Zone Risk Index is then calculated by averaging the risk index for each public crossing within the proposed quiet zone. (Note: The initial Quiet Zone Risk Index and the Crossing Corridor Risk Index are the same for Pre-Rule Quiet Zones.)

5. Compare the Quiet Zone Risk Index to the Nationwide Significant Risk Threshold. If the Quiet Zone Risk Index is equal to, or less than, the Nationwide Significant Risk Threshold, then the quiet zone qualifies, and the public authority may provide the Notice of Quiet Zone Establishment. With this approach, FRA will annually recalculate the Nationwide Significant Risk Threshold and the Quiet Zone Risk. If the Quiet Zone Risk Index for the quiet zone is found to be above the Nationwide Significant Risk Threshold, FRA will notify the public authority so that appropriate measures can be taken (See §222.51(b)). If the Pre-Rule Quiet Zone is not established by this step, proceed on to the next step.

6. If the Quiet Zone Risk Index is above the Nationwide Significant Risk Threshold but less than twice the Nationwide Significant Risk Threshold and there have been no relevant collisions at any public grade crossing within the quiet zone for the preceding five years, then the quiet zone qualifies for automatic approval. However, in order to qualify on this basis, the public authority must provide a Notice of Quiet Zone Establishment by December 24, 2005. (Note: A relevant collision means a collision at a highway-rail grade crossing between a train and a motor vehicle, excluding the following: a collision resulting from an activation failure of an active grade crossing warning system; a collision in which there is no driver in the motor vehicle; or a collision where the highway vehicle struck the side of the train beyond the fourth locomotive unit or rail car.) With this approach, FRA will annually recalculate the Nationwide Significant Risk Threshold and the Quiet Zone Risk. If the Quiet Zone Risk Index for the quiet zone is above two times the Nationwide Significant Risk Threshold, or a relevant collision has occurred during the preceding year, FRA will notify the public authority so that appropriate measures can be taken (See §222.51(b)).

If the Pre-Rule Quiet Zone is not established by automatic approval, continuation of the quiet zone may require implementation of SSMs or ASMs to reduce the Quiet Zone Risk Index for the quiet zone to a risk level equal to, or below, either the risk level which would exist if locomotive horns sounded at all crossings in the quiet zone (*i.e.* the Risk Index with Horns) or the Nationwide Significant Risk Threshold. This is the same methodology used to create New Quiet Zones with the exception of the four differences previously noted. A review of the previous discussion on the two methods used to establish quiet zones may prove helpful in determining which would be the most beneficial to use for a particular Pre-Rule Quiet Zone.

C. Pre-Rule Quiet Zones—Public Authority Designation

The following discussion is meant to provide guidance on the steps necessary to establish a Pre-Rule Quiet Zone using the Public Authority Designation method.

1. The public authority must provide a Notice of Intent (§§222.43(a)(1) and 222.43(b)) to the railroads that operate within the proposed quiet zone, the State agency responsible for highway and road safety and the State agency responsible for grade crossing safety. This notice must be mailed by February 24, 2008, in order to continue existing locomotive horn restrictions beyond June 24, 2008 without interruption. The purpose of this Notice of Intent is to provide an opportunity for the railroads and the State agencies to provide comments and recommendations to the public authority as it is planning the quiet zone. They will have 60 days to provide these comments to the public authority. The Notice of Intent must be provided, if new SSMs or ASMs will be implemented within the quiet zone. FRA encourages public authorities to provide the required Notice of Intent early in the quiet zone development process. The railroads and State agencies can provide an expertise that very well may not be present within the public authority. FRA believes that it will be very useful to include these organizations in the planning process. For example, including them in the inspections of the crossing will help ensure accurate Inventory information for the crossings. Note: Please see Section IV for details on the requirements of a Notice of Intent.

2. All of the items listed in ''Requirements for Both Public Authority Designation and Public Authority Application—Pre-Rule Quiet Zones'' previously mentioned are to be accomplished. Remember that a Pre-Rule Quiet Zone may be less than one-half mile in length if that was its length as of October 9, 1996. Also, a Pre-Rule Quiet Zone does not have to have automatic warning devices consisting of flashing lights and gates at every public crossing.

3. Calculate the risk index for each public crossing within the quiet zone as in Step 3—Pre-Rule Quiet Zones—Automatic Approval.

4. The Crossing Corridor Risk Index is then calculated by averaging the risk index for each public crossing within the proposed quiet zone. Since train horns are not being sounded for crossings, this value is actually the initial Quiet Zone Risk Index.

5. Calculate Risk Index with Horns by the following:

a. For each public crossing, divide the risk index that was calculated in Step 2 by the appropriate value in Table 1. This produces the risk index that would have existed had the train horn been sounded.

b. Average these reduced risk indices together. The resulting average is the Risk Index with Horns.

6. Begin to reduce the Quiet Zone Risk Index through the use of SSMs or by upgrading existing warning devices. Follow the procedure provided in Step 6—Public Authority Designation until the Quiet Zone Risk Index has been reduced to a level equal to, or less than, either the Nationwide Significant Risk Threshold or the Risk Index with Horns. A public authority may elect to upgrade an existing warning device as part of its Pre-Rule Quiet Zone plan. When upgrading a warning device, the accident prediction value for that crossing must be re-calculated for the new warning device. Determine the new risk index for the upgraded crossing by using the new accident prediction value in the severity risk index formula. This new risk index is then used to compute the new Quiet Zone Risk Index. (Remember that FRA's web-based Quiet Zone Calculator will be able to do the actual computations.) Once the Quiet Zone Risk Index has been reduced to a level equal to, or less than, either the Nationwide Significant Risk Threshold or the Risk Index with Horns, the quiet zone may be established by the Public Authority Designation method, and the public authority may provide the Notice of Quiet Zone Establishment once all the necessary improvements have been installed. If the quiet zone is established by reducing the Quiet Zone Risk Index to a risk level equal to, or less than, the Nationwide Significant Risk Threshold, FRA will annually recalculate the Nationwide Significant Risk Threshold and the Quiet Zone Risk Index. If the Quiet Zone Risk Index for the quiet zone rises above the Nationwide Significant Risk Threshold, FRA will notify the public authority so that appropriate measures can be taken (See § 222.51(b)).

7. If the Pre-Rule Quiet Zone will not be established before June 24, 2008, the public authority must file a detailed plan for quiet zone improvements with the Associate Administrator by June 24, 2008. By providing a Notice of Intent (see Step 1 above) and a detailed plan for quiet zone improvements, existing locomotive horn restrictions may continue until June 24, 2010. (If a comprehensive State-wide implementation plan and funding commitment are also provided and safety improvements are initiated within at least one Pre-Rule Quiet Zone or Pre-Rule Partial Quiet Zone, existing locomotive horn restrictions may continue until June 24, 2013.) (See § 222.41(c) for more information.)

NOTE: The provisions stated above for crossing closures, grade separations, wayside horns, pre-existing SSMs and pre-existing modified SSMs apply for Public Authority Application to FRA as well.

D. Pre-Rule Quiet Zones—Public Authority Application to FRA

The following discussion is meant to provide guidance on the steps necessary to establish a Pre-Rule Quiet Zone using the Public Authority Application to FRA method.

1. The public authority must provide a Notice of Intent (§§ 222.43(a)(1) and 222.43(b)) to the railroads that operate within the proposed quiet zone, the State agency responsible for highway and road safety and the State agency responsible for grade crossing safety. This notice must be mailed by February 24, 2008, in order to continue existing locomotive horn restrictions beyond June 24, 2008 without interruption. The purpose of this Notice of Intent is to provide an opportunity for the railroads and the State agencies to provide comments and recommendations to the public authority as it is planning the quiet zone. They will have 60 days to provide these comments to the public authority. The Notice of Intent must be provided, if new SSMs or ASMs will be implemented within the quiet zone. FRA encourages public authorities to provide the required Notice of Intent early in the quiet zone development process. The railroads and State agencies can provide an expertise that very well may not be present within the public authority. FRA believes that it will be very useful to include these organizations in the planning process. For example, including them in the inspections of the crossing will help ensure accurate Inventory information for the crossings. Note: Please see Section IV for details on the requirements of a Notice of Detailed Plan.

2. All of the items listed in ''Requirements for both Public Authority Designation and Public Authority Application—Pre-Rule Quiet Zones'' previously mentioned are to be accomplished. Remember that a Pre-Rule Quiet Zone may be less than one-half mile in length if that was its length as of October 9, 1996. Also, a Pre-Rule Quiet Zone does not have to have automatic warning devices consisting of flashing lights and gates at every public crossing.

3. Calculate the risk index for each public crossing within the quiet zone (See appendix D. FRA's web-based Quiet Zone Calculator may be used to simplify the calculation process). If the Inventory record does not reflect the actual conditions at the crossing, be sure to use the conditions that currently exist when calculating the risk index.

4. The Crossing Corridor Risk Index is then calculated by averaging the risk index for each public crossing within the proposed quiet zone. Since train horns are not being sounded for crossings, this value is actually the initial Quiet Zone Risk Index.

5. Calculate Risk Index with Horns by the following:

a. For each public crossing, divide its risk index that was calculated in Step 2 by the appropriate value in Table 1. This produces the risk index that would have existed had the train horn been sounded.

b. Average these reduced risk indices together. The resulting average is the Risk Index with Horns.

6. Begin to reduce the Quiet Zone Risk Index through the use of ASMs and/or SSMs. Follow the procedure provided in Step 6—New Quiet Zones Public Authority Designation—until the Quiet Zone Risk Index has been reduced to a level equal to, or less than, either the Nationwide Significant Risk Threshold or the Risk Index with Horns. A public authority may elect to upgrade an existing warning device as part of its Pre-Rule Quiet Zone plan. When upgrading a warning device, the accident prediction value for that crossing must be re-calculated for the new warning device. Determine the new risk index for the upgraded crossing by using the new accident prediction value in the severity risk index formula. (Remember that FRA's web-based quiet zone risk calculator will be able to do the actual computations.) This new risk index is then used to compute the new Quiet Zone Risk Index. Effectiveness rates for ASMs should be provided as follows:

a. Modified SSMs—Estimates of effectiveness for modified SSMs may be based upon adjustments from the benchmark levels provided in appendix A or from actual field data derived from the crossing sites. The application must provide an estimated effectiveness rate and the rationale for the estimate.

b. Non-engineering ASMs—Effectiveness rates are to be calculated in accordance with the provisions of appendix B, section II B.

c. Engineering ASMs—Effectiveness rates are to be calculated in accordance with the provisions of appendix B, section III B.

7. Once it has been determined through analysis that the Quiet Zone Risk Index will be reduced to a level equal to, or less than, either the Nationwide Significant Risk Threshold or the Risk Index with Horns, the public authority may make application to FRA for a quiet zone under §222.39(b). FRA will review the application to determine the appropriateness of the proposed effectiveness rates, and whether or not the proposed application demonstrates that the quiet zone meets the requirements of the rule. When submitting the application to FRA for approval, it should be remembered that the application must contain the following (§222.39(b)(1)):

a. Sufficient detail concerning the present safety measures at all crossings within the proposed quiet zone to enable the Associate Administrator to evaluate their effectiveness. This includes current and accurate crossing Inventory forms for each public, private and pedestrian grade crossing.

b. Detailed information on the safety improvements, including upgraded warning devices that are proposed to be implemented at public, private, and pedestrian grade crossings within the proposed quiet zone.

c. Membership and recommendations of the diagnostic team (if any) that reviewed the proposed quiet zone.

d. Statement of efforts taken to address comments submitted by affected railroads, the State agency responsible for grade crossing safety, and the State agency responsible for highway and road safety, including a list of any objections raised by the railroads or State agencies.

e. A commitment to implement the proposed safety measures.

f. Demonstrate through data and analysis that the proposed measures will reduce the Quiet Zone Risk Index to a level at, or below, either the Nationwide Significant Risk Threshold or the Risk Index with Horns.

g. A copy of the application must be provided to all railroads operating over the public highway-rail grade crossings within the quiet zone; the highway or traffic control or law enforcement authority having jurisdiction over vehicular traffic at grade crossings within the quiet zone; the landowner having control over any private crossings within the quiet zone; the State agency responsible for highway and road safety; the State agency responsible for grade crossing safety; and the Associate Administrator. (§222.39(b)(3))

8. Upon receiving written approval from FRA of the quiet zone application, the public authority may then provide the Notice of Quiet Zone Establishment and implement the quiet zone. If the quiet zone is established by reducing the Quiet Zone Risk Index to a level equal to, or less than, the Nationwide Significant Risk Threshold, FRA will annually recalculate the Nationwide Significant Risk Threshold and the Quiet Zone Risk. If the Quiet Zone Risk Index for the quiet zone is above the Nationwide Significant Risk Threshold, FRA will notify the public authority so that appropriate measures can be taken (See §222.51(b)).

NOTE: The provisions stated above for crossing closures, grade separations, wayside horns, pre-existing SSMs and pre-existing modified SSMs apply for Public Authority Application to FRA as well.

SECTION IV—REQUIRED NOTIFICATIONS

A. Introduction

The public authority is responsible for providing notification to parties that will be affected by the quiet zone. There are several different types of notifications and a public authority may have to make more than one notification during the entire process of

complying with the regulation. The notification process is to ensure that interested parties are made aware in a timely manner of the establishment or continuation of quiet zones. It will also provide an opportunity for State agencies and affected railroads to provide input to the public authority during the development of quiet zones. Specific information is to be provided so that the crossings in the quiet zone can be identified. Providing the appropriate notification is important because once the rule becomes effective, railroads will be obligated to sound train horns when approaching all public crossings unless notified in accordance with the rule that a New Quiet Zone has been established or that a Pre-Rule or Intermediate Quiet Zone is being continued.

B. Notice of Intent—§ 222.43(b)

The purpose of the Notice of Intent is to provide notice to the railroads and State agencies that the public authority is planning on creating a New Quiet Zone or implementing new SSMs or ASMs within a Pre-Rule Quiet Zone. The Notice of Intent provides an opportunity for the railroad and the State agencies to give input to the public authority during the quiet zone development process. The State agencies and railroads will be given sixty days to provide information and comments to the public agency.

The Notice of Intent must be provided under the following circumstances:

1. A New Quiet Zone or New Partial Quiet Zone is under consideration.

2. An Intermediate Quiet Zone or Intermediate Partial Quiet Zone that will be converted into a New Quiet Zone or New Partial Quiet Zone. Please note that Notice of Intent must be mailed by April 3, 2006, in order prevent the resumption of locomotive horn sounding on June 24, 2006.

3. The implementation of SSMs or ASMs within a Pre-Rule Quiet Zone or Pre-Rule Partial Quiet Zone is under consideration. Please note that Notice of Intent must be mailed by February 24, 2008, in order to continue existing restrictions on locomotive horn sounding beyond June 24, 2008 without interruption. Each public authority that is creating a New Quiet Zone must provide written notice, by certified mail, return receipt requested, to the following:

1. All railroads operating within the proposed quiet zone

2. State agency responsible for highway and road safety

3. State agency responsible for grade crossing safety

The Notice of Intent must contain the following information:

1. A list of each public highway-rail grade crossing, private highway-rail grade crossing, and pedestrian crossings within the proposed quiet zone. The crossings are to be identified by both the U.S. DOT Crossing Inventory Number and the street or highway name.

2. A statement of the time period within which the restrictions would be in effect on the routine sounding of train horns (*i.e.*, 24 hours or from 10 p.m. to 7 a.m.).

3. A brief explanation of the public authority's tentative plans for implementing improvements within the proposed quiet zone.

4. The name and title of the person who will act as the point of contact during the quiet zone development process and how that person can be contacted.

5. A list of the names and addresses of each party that will receive a copy of the Notice of Intent.

The parties that receive the Notice of Intent will be able to submit information or comments to the public authority for 60 days. The public authority will not be able to establish the quiet zone during the 60 day comment period unless each railroad and State agency that receives the Notice of Intent provides either written comments to the public authority or a written statement waiving its right to provide comments on the Notice of Intent. The public authority must provide an affirmation in the Notice of Quiet Zone Establishment that each of the required parties was provided the Notice of Intent and the date it was mailed. If the quiet zone is being established within 60 days of the mailing of the Notice of Intent, the public authority also must affirm each of the parties have provided written comments or waived its right to provide comments on the Notice of Intent.

C. Notice of Quiet Zone Continuation—§ 222.43(c)

The purpose of the Notice of Quiet Zone Continuation is to provide a means for the public authority to formally advise affected parties that an existing quiet zone is being continued after the effective date of the rule. All Pre-Rule, Pre-Rule Partial, Intermediate and Intermediate Partial Quiet Zones must provide this Notice of Quiet Zone Continuation no later than June 3, 2005 to ensure that train horns are not sounded at public crossings when the rule becomes effective on June 24, 2005. This will enable railroads to properly comply with the requirements of the Final Rule.

Each public authority that is continuing an existing Pre-Rule, Pre-Rule Partial, Intermediate and Intermediate Partial Quiet Zone must provide written notice, by certified mail, return receipt requested, to the following:

1. All railroads operating over the public highway-rail grade crossings within the quiet zone;

2. The highway or traffic control or law enforcement authority having jurisdiction over

vehicular traffic at grade crossings within the quiet zone;

3. The landowner having control over any private crossings within the quiet zone;

4. The State agency responsible for highway and road safety;

5. The State agency responsible for grade crossing safety; and

6. The Associate Administrator.

The Notice of Quiet Zone Continuation must contain the following information:

1. A list of each public highway-rail grade crossing, private highway-rail grade crossing, and pedestrian crossing within the quiet zone, identified by both U.S. DOT National Highway-Rail Grade Crossing Inventory Number and street or highway name.

2. A specific reference to the regulatory provision that provides the basis for quiet zone continuation, citing as appropriate, §222.41 or 222.42.

3. A statement of the time period within which restrictions on the routine sounding of the locomotive horn will be imposed (i.e., 24 hours or nighttime hours only.)

4. An accurate and complete Grade Crossing Inventory Form for each public highway-rail grade crossing, private highway-rail grade crossing, and pedestrian crossing within the quiet zone that reflects conditions currently existing at the crossing.

5. The name and title of the person responsible for monitoring compliance with the requirements of this part and the manner in which that person can be contacted.

6. A list of the names and addresses of each party that will receive the Notice of Quiet Zone Continuation.

7. A statement signed by the chief executive officer of each public authority participating in the continuation of the quiet zone, in which the chief executive officer certifies that the information submitted by the public authority is accurate and complete to the best of his/her knowledge and belief.

Public authorities should remember that this notice is required to ensure that train horns will remain silent. Even if a public authority has not been able to determine whether its Pre-Rule or Pre-Rule Partial Quiet Zone qualifies for automatic approval under the rule, it should issue a Notice of Quiet Zone Continuation to keep the train horns silent after the effective date of the rule.

E. Notice of Quiet Zone Establishment—§222.43(d)

The purpose of the Notice of Quiet Zone Establishment is to provide a means for the public authority to formally advise affected parties that a quiet zone is being established. Notice of Quiet Zone Establishment must be provided under the following circumstances:

1. A New Quiet Zone or New Partial Quiet Zone is being created.

2. A Pre-Rule Quiet Zone or a Pre-Rule Partial Quiet Zone that qualifies for automatic approval under the rule is being established.

3. An Intermediate Quiet Zone or Intermediate Partial Quiet Zone that is creating a New Quiet Zone under the rule. Please note that Notice of Quiet Zone Establishment must be provided by June 3, 2006, in order to prevent the resumption of locomotive horn sounding on June 24, 2006.

4. A Pre-Rule Quiet Zone or a Pre-Rule Partial Quiet Zone that was not established by automatic approval and has since implemented improvements to establish a quiet zone in accordance to the rule.

Each public authority that is establishing a quiet zone under the above circumstances must provide written notice, by certified mail, return receipt requested, to the following:

1. All railroads operating over the public highway-rail grade crossings within the quiet zone;

2. The highway or traffic control or law enforcement authority having jurisdiction over vehicular traffic at grade crossings within the quiet zone;

3. The landowner having control over any private crossings within the quiet zone;

4. The State agency responsible for highway and road safety;

5. The State agency responsible for grade crossing safety; and

6. The Associate Administrator.

The Notice of Quiet Establishment must contain the following information:

1. A list of each public highway-rail grade crossing, private highway-rail grade crossing, and pedestrian crossing within the quiet zone, identified by both U.S. DOT National Highway-Rail Grade Crossing Inventory Number and street or highway name.

2. A specific reference to the regulatory provision that provides the basis for quiet zone establishment, citing as appropriate, §222.39(a)(1), 222.39(a)(2)(i), 222.39(a)(2)(ii), 222.39(a)(3), 222.39(b), 222.41(a)(1)(i), 222.41(a)(1)(ii), 222.41(a)(1)(iii), 222.41(a)(1)(iv), 222.41(b)(1)(i), 222.41(b)(1)(ii), 222.41(b)(1)(iii), or 222.41(b)(1)(iv).

(a) If the Notice of Quiet Establishment contains a specific reference to §222.39(a)(2)(i), 222.39(a)(2)(ii), 222.39(a)(3), 222.41(a)(1)(ii), 222.41(a)(1)(iii), 222.41(a)(1)(iv), 222.41(b)(1)(ii), 222.41(b)(1)(iii), or 222.41(b)(1)(iv), it shall include a copy of the FRA web page that contains the quiet zone data upon which the public authority is relying.

(b) If the Notice of Quiet Establishment contains a specific reference to §222.39(b), it shall include a copy of FRA's notification of approval.

3. If a diagnostic team review was required under §222.25 (private crossings) or §222.27

(pedestrian crossings), the Notice of Quiet Establishment shall include a statement affirming that the State agency responsible for grade crossing safety and all affected railroads were provided an opportunity to participate in the diagnostic team review. The Notice of Quiet Establishment shall also include a list of recommendations made by the diagnostic team.

4. A statement of the time period within which restrictions on the routine sounding of the locomotive horn will be imposed (i.e., 24 hours or from 10 p.m. until 7 a.m.)

5. An accurate and complete Grade Crossing Inventory Form for each public highway-rail grade crossing, private highway-rail grade crossing, and pedestrian crossing within the quiet zone that reflects the conditions existing at the crossing before any new SSMs or ASMs were implemented.

6. An accurate, complete and current Grade Crossing Inventory Form for each public highway-rail grade crossing, private highway-rail grade crossing, and pedestrian crossing within the quiet zone that reflects SSMs and ASMs in place upon establishment of the quiet zone. SSMs and ASMs that cannot be fully described on the Inventory Form shall be separately described.

7. If the public authority was required to provide a Notice of Intent:

(a) The Notice of Quiet Zone Establishment shall contain a statement affirming that the Notice of Intent was provided in accordance with the rule. This statement shall also state the date on which the Notice of Intent was mailed.

(b) If the Notice of Quiet Zone Establishment will be mailed less than 60 days after the date on which the Notice of Intent was mailed, the Notice of Quiet Zone Establishment shall also contain a written statement affirming that comments and/or written waiver statements have been received from each railroad operating over public grade crossings within the proposed quiet zone, the State agency responsible for grade crossing safety, and the State agency responsible for highway and road safety.

8. The name and title of the person responsible for monitoring compliance with the requirements of this part and the manner in which that person can be contacted.

9. A list of the names and addresses of each party that is receiving a copy of the Notice of Quiet Establishment.

10. A statement signed by the chief executive officer of each public authority participating in the establishment of the quiet zone, in which the chief executive officer shall certify that the information submitted by the public authority is accurate and complete to the best of his/her knowledge and belief.

SECTION V—EXAMPLES OF QUIET ZONE IMPLEMENTATIONS

Example 1—New Quiet Zone

(a) A public authority wishes to create a New Quiet Zone over four public crossings. All of the crossings are equipped with flashing lights and gates, and the length of the quiet zone is 0.75 mile. There are no private crossings within the proposed zone.

(b) The tables that follow show the street name in the first column, and the existing risk index for each crossing with the horn sounding (''Crossing Risk Index w/ Horns'') in the second. The third column, ''Crossing Risk Index w/o Horns'', is the risk index for each crossing after it has been inflated by 66.8% to account for the lack of train horns. The fourth column, ''SSM Eff'', is the effectiveness of the SSM at the crossing. A zero indicates that no SSM has been applied. The last column, ''Crossing Risk Index w/o Horns Plus SSM'', is the inflated risk index for the crossing after being reduced by the implementation of the SSM. At the bottom of the table are two values. The first is the Risk Index with Horns (''RIWH'') which represents the average initial amount of risk in the proposed quiet zone with the train horn sounding. The second is the Quiet Zone Risk Index (''QZRI''), which is the average risk in the proposed quiet zone taking into consideration the increased risk caused by the lack of train horns and the reductions in risk attributable to the installation of SSMs. For this example it is assumed that the Nationwide Significant Risk Threshold is 17,030. In order for the proposed quiet zone to qualify under the rule, the Quiet Zone Risk Index must be reduced to a level at, or below, the Nationwide Significant Risk Threshold (17,030) or the Risk Index with Horns.

(c) Table 2 shows the existing conditions in the proposed quiet zone. SSMs have not yet been installed. The Risk Index with Horns for the proposed quiet zone is 11,250. The Quiet Zone Risk Index without any SSMs is 18,765.

TABLE 2

Street	Crossing risk index w/horns	Crossing risk index w/o horns	SSM EFF	Crossing risk index w/o horns plus SSM
A	12000	20016	0	20016
B	10000	16680	0	16680
C	8000	13344	0	13344

TABLE 2—Continued

Street	Crossing risk index w/horns	Crossing risk index w/o horns	SSM EFF	Crossing risk index w/o horns plus SSM
D	15000	25020	0	25020
	RIWH			QZRI
	11250			18765

(d) The public authority decides to install traffic channelization devices at D Street. Reducing the risk at the crossing that has the highest severity risk index will provide the greatest reduction in risk. The effectiveness of traffic channelization devices is 0.75. Table 3 shows the changes in the proposed quiet zone corridor that would occur when traffic channelization devices are installed at D Street. The Quiet Zone Risk Index has been reduced to 14,073.75. This reduction in risk would qualify the quiet zone as the risk has been reduced lower than the Nationwide Significant Risk Threshold which is 17,030.

TABLE 3

Street	Crossing risk index w/horns	Crossing risk index w/o horns	SSM EFF	Crossing risk index w/o horns plus SSM
A	12000	20016	0	20016
B	10000	16680	0	16680
C	8000	13344	0	13344
D	15000	25020	0.75	6255
	RIWH			QZRI
	11250			14073.75

(e) The public authority realizes that reducing the Quiet Zone Risk Index to a level below the Nationwide Significant Risk Threshold will result in an annual re-calculation of the Quiet Zone Risk Index and comparison to the Nationwide Significant Risk Threshold. As the Quiet Zone Risk Index is close to the Nationwide Significant Risk Threshold (14,074 to 17,030), there is a reasonable chance that the Quiet Zone Risk Index may some day exceed the Nationwide Significant Risk Threshold. This would result in the quiet zone no longer being qualified and additional steps would have to be taken to keep the quiet zone. Therefore, the public authority decides to reduce the risk further by the use of traffic channelization devices at A Street. Table 4 shows the results of this change. The Quiet Zone Risk Index is now 10,320.75 which is less than the Risk Index with Horns of 11,250. The quiet zone now qualifies by fully compensating for the loss of train horns and will not have to undergo annual reviews of the Quiet Zone Risk Index.

TABLE 4

Street	Crossing risk index w/horns	Crossing risk index w/o horns	SSM EFF	Crossing risk index w/o horns plus SSM
A	12000	20016	0.75	5004
B	10000	16680	0	16680
C	8000	13344	0	13344
D	15000	25020	0.75	6255
	RIWH			QZRI
	11250			10320.75

Example 2—Pre-Rule Quiet Zone

(a) A public authority wishes to qualify a Pre-Rule Quiet Zone which did not meet the requirements for Automatic Approval because the Quiet Zone Risk Index is greater than twice the Nationwide Significant Risk Threshold. There are four public crossings in the Pre-Rule Quiet Zone. Three of the crossings are equipped with flashing lights and gates, and the fourth (Z Street) is passively signed with a STOP sign. The length of the

quiet zone is 0.6 mile, and there are no private crossings within the proposed zone.

(b) The tables that follow are very similar to the tables in Example 1. The street name is shown in the first column, and the existing risk index for each crossing (''Crossing Risk Index w/o Horns'') in the second. This is a change from the first example because the risk is calculated without train horns sounding because of the existing ban on whistles. The third column, ''Crossing Risk Index w/ Horns'', is the risk index for each crossing after it has been adjusted to reflect what the risk would have been had train horns been sounding. This is mathematically done by dividing the existing risk index for the three gated crossing by 1.668. The risk at the passive crossing at Z Street is divided by 1.749. (See the above discussion in ''Pre-Rule Quiet Zones—Establishment Overview'' for more information.) The fourth column, ''SSM Eff'', is the effectiveness of the SSM at the crossing. A zero indicates that no SSM has been applied. The last column, ''Crossing Risk Index w/o Horns Plus SSM'', is the risk index without horns for the crossing after being reduced for the implementation of the SSM. At the bottom of the table are two values. The first is the Risk Index with Horns (RIWH), which represents the average initial amount of risk in the proposed quiet zone with the train horn sounding. The second is the Quiet Zone Risk Index (''QZRI''), which is the average risk in the proposed quiet zone taking into consideration the increased risk caused by the lack of train horns and reductions in risk attributable to the installation of SSMs. Once again it is assumed that the Nationwide Significant Risk Threshold is 17,030. The Quiet Zone Risk Index must be reduced to either the Nationwide Significant Risk Threshold (17,030) or to the Risk Index with Horns in order to qualify under the rule.

(c) Table 5 shows the existing conditions in the proposed quiet zone. SSMs have not yet been installed. The Risk Index with Horns for the proposed quiet zone is 18,705.83. The Quiet Zone Risk Index without any SSMs is 31,375. Since the Nationwide Significant Risk Threshold is less than the calculated Risk Index with Horns, the public authority's goal will be to reduce the risk to at least value of the Risk Index with Horns. This will qualify the Pre-Rule Quiet Zone under the rule.

TABLE 5

Street	Crossing risk index w/o horns	Crossing risk index w/ horns	SSM EFF	Crossing risk index w/o horns plus SSM
W	35,000	20,983.21	0	35,000
X	42,000	25,179.86	0	42,000
Y	33,500	20,083.93	0	33,500
Z	15,000	8,576.33	0	15,000
	RIWH			QZRI
	18,705.83			31,375

(d) The Z Street crossing is scheduled to have flashing lights and gates installed as part of the state's highway-rail grade crossing safety improvement plan (Section 130). While this upgrade is not directly a part of the plan to authorize a quiet zone, the public authority may take credit for the risk reduction achieved by the improvement from a passive STOP sign crossing to a crossing equipped with flashing lights and gates. Unlike New Quiet Zones, upgrades to warning devices in Pre-Rule Quiet Zones do contribute to the risk reduction necessary to qualify under the rule. Table 6 shows the quiet zone corridor after including the warning device upgrade at Z Street. The Quiet Zone Risk Index has been reduced to 29,500.

TABLE 6

Street	Crossing risk index w/o horns	Crossing risk index w/ horns	SSM EFF	Crossing risk index w/o horns plus SSM
W	35,000	20,983.21	0	35,000
X	42,000	25,179.86	0	42,000
Y	33,500	20,083.93	0	33,500
Z	7,500	8,576.33	0	7,500
	RIWH			QZRI
	18,705.83			29,500

(e) The public authority elects to install four-quadrant gates without vehicle presence detection at X Street. As shown in Table 7, this reduces the Quiet Zone Risk Index to 20,890. This risk reduction is not sufficient to quality as quiet zone under the rule.

TABLE 7

Street	Crossing risk index w/o horns	Crossing risk index w/ horns	SSM EFF	Crossing risk index w/o horns plus SSM
W	35,000	20,983.21	0	35,000
X	42,000	25,179.86	0.82	7,560
Y	33,500	20,083.93	0	33,500
Z	7,500	8,576.33	0	7,500
	RIWH			QZRI
	18,705.83			20,890

(f) The public authority next decides to use traffic channelization devices at W Street. Table 8 shows that the Quiet Zone Risk Index is now reduced to 14,327.5. This risk reduction fully compensates for the loss of the train horn as it is less than the Risk Index with Horns. The quiet zone is qualified under the rule.

TABLE 8

Street	Crossing risk index w/o horns	Crossing risk index w/ horns	SSM EFF	Crossing risk index w/o horns plus SSM
W	35000	20983.21	0.75	8750
X	42000	25179.86	0.82	7560
Y	33500	20083.93	0	33500
Z	7500	8576.33	0	7500
	RIWH			QZRI
	18705.83			14327.5

APPENDIX D TO PART 222—DETERMINING RISK LEVELS

INTRODUCTION

The Nationwide Significant Risk Threshold, the Crossing Corridor Risk Index, and the Quiet Zone Risk Index are all measures of collision risk at public highway-rail grade crossings that are weighted by the severity of the associated casualties. Each crossing can be assigned a risk index.

(a) The *Nationwide Significant Risk Threshold* represents the average severity weighted collision risk for all public highway-rail grade crossings equipped with lights and gates nationwide where train horns are routinely sounded. FRA developed this index to serve as a threshold of permissible risk for quiet zones established under this rule.

(b) The *Crossing Corridor Risk Index* represents the average severity weighted collision risk for all public highway-rail grade crossings along a defined rail corridor.

(c) The *Quiet Zone Risk Index* represents the average severity weighted collision risk for all public highway-rail grade crossings that are part of a quiet zone.

THE PREDICTION FORMULAS

(a) The Prediction Formulas were developed by DOT as a guide for allocating scarce traffic safety budgets at the State level. They allow users to rank candidate crossings for safety improvements by collision probability. There are three formulas, one for each warning device category:

1. automatic gates with flashing lights;
2. flashing lights with no gates; and
3. passive warning devices.

(b) The prediction formulas can be used to derive the following for each crossing:

1. the predicted collisions (PC)
2. the probability of a fatal collision given that a collision occurs (P(FC|C))
3. the probability of a casualty collision given that a collision occurs (P(CC|C))

(c) The following factors are the determinants of the number of predicted collisions per year:

1. average annual daily traffic
2. total number of trains per day
3. number of highway lanes
4. number of main tracks
5. maximum timetable train speed
6. whether the highway is paved or not
7. number of through trains per day during daylight hours

(d) The resulting basic prediction is improved in two ways. It is enriched by the particular crossing's collision history for the previous five years and it is calibrated by resetting normalizing constants. The normalizing constants are reset so that the sum of the predicted accidents in each warning device group (passive, flashing lights, gates) for the top twenty percent most hazardous crossings exactly equals the number of accidents which occurred in a recent period for the top twenty percent of that group. This adjustment factor allows the formulas to stay current with collision trends. The calibration also corrects for errors such as data entry errors. The final output is the predicted number of collisions (PC).

(e) The severity formulas answer the question, ''What is the chance that a fatality (or casualty) will happen, given that a collision has occurred?'' The fatality formula calculates the probability of a fatal collision given that a collision occurs (*i.e.*, the probability of a collision in which a fatality occurs) P(FC|C). Similarly, the casualty formula calculates the probability of a casualty collision given that a collision occurs P(CC|C). As casualties consist of both fatalities and injuries, the probability of a nonfatal injury collision is found by subtracting the probability of a fatal collision from the probability of a casualty collision. To convert the probability of a fatal or casualty collision to the number of expected fatal or casualty collisions, that probability is multiplied by the number of predicted collisions (PC).

(f) For the prediction and severity index formulas, please see the following DOT publications: *Summary of the DOT Rail-Highway Crossings Resource Allocation Procedure—Revised*, June 1987, and the *Rail-Highway Crossing Resource Allocation Procedure: User's Guide, Third Edition*, August 1987. Both documents are in the docket for this rulemaking and also available through the National Technical Information Service located in Springfield, Virginia 22161.

RISK INDEX

(a) The risk index is basically the predicted cost to society of the casualties that are expected to result from the predicted collisions at a crossing. It incorporates three outputs of the DOT prediction formulas. The two components of a risk index are:

1. Predicted Cost of Fatalities = PC × P(FC|C) × (Average Number of Fatalities Observed In Fatal Collisions) × $3 million
2. Predicted Cost of Injuries = PC × (P(CC|C)—P(FC|C)) × (Average Number of Injuries in Collisions Involving Injuries) × $1,167,000

PC, P(CC|C), and P(FC|C) are direct outputs of the DOT prediction formulas.

(b) The average number of fatalities observed in fatal collisions and the average number of injuries in collisions involving injuries are calculated by FRA as described in paragraphs (c) through (e).

(c) FRA will match the highway-rail incident files for the past five years against a data file containing the list of grade crossings where the train horn was not routinely sounded over that five-year period to identify two types of collisions involving trains and motor vehicles: (1) Those that occurred at crossings where the train horn was not routinely sounded during the period, and (2) those that occurred at crossings equipped with automatic gates where the train horn was routinely sounded. Certain records will be excluded, including records pertaining to incidents where the driver was not in the motor vehicle or where the motor vehicle struck the train beyond the fourth locomotive or rail car that entered the crossing. FRA believes that sounding the train horn would not be very effective at preventing such incidents.[1]

(d) Collisions in the group containing the gated crossings nationwide where horns were routinely sounded will then be identified as fatal, injury only or no casualty. Collisions will be identified as fatal if one or more deaths occurred, regardless of whether injuries were also sustained. Collisions will be identified as injury only when injuries, but no fatalities, resulted.

(e) The collisions (incidents) will be summarized by year for the five-year period preceding the year in which the risk index is being updated. The fatality rate for each year will be calculated by dividing the number of fatalities by the number of fatal incidents. The injury rate will be calculated by dividing the number of injuries in injury only incidents by the number of injury only incidents. FRA will publish updated fatality and injury rates on an annual basis in the FEDERAL REGISTER.

(f) Per guidance from DOT, $3 million is the value placed on preventing a fatality. The Abbreviated Injury Scale (AIS) developed by the Association for the Advancement of Automotive Medicine categorizes injuries into six levels of severity. Each AIS level is assigned a value of injury avoidance as a fraction of the value of avoiding a fatality . FRA rates collisions that occur at train speeds in excess of 25 mph as an AIS level 5

[1] The data used to make these exclusions is contained in blocks 18—Position of Car Unit in Train; 19—Circumstance: Rail Equipment Struck/Struck by Highway User; 28—Number of Locomotive Units; and 29—Number of Cars on the current FRA Form 6180–57 Highway-Rail Grade Crossing Accident/Incident Report.

($2,287,500) and injuries that result from collisions involving trains traveling under 25 mph as an AIS level 2 ($46,500). About half of grade crossing collisions occur at speeds greater than 25 mph. Therefore, FRA estimates that the value of preventing the average injury resulting from a grade crossing collision is $1,167,000 (the average of an AIS–5 injury and an AIS–2 injury).

(g) Notice that the quantity [PC*P(FC|C)] represents the expected number of fatal collisions. Similarly, {PC*[P(CC|C)–P(FC|C)]} represents the expected number of injury collisions. These are then multiplied by their respective average number of fatalities and injuries (from the table above) to develop the number of expected casualties. The final parts of the expressions attach the dollar values for these casualties.

(h) The Risk Index for a Crossing is the integer sum of the Predicted Cost of Fatalities and the Predicted Cost of Injuries.

NATIONWIDE SIGNIFICANT RISK THRESHOLD

The Nationwide Significant Risk Threshold is simply an average of the risk indexes for all of the gated public crossings nationwide where train horns are routinely sounded. This value will be recalculated annually and published in a notice in the FEDERAL REGISTER. For the most recent value of the Nationwide Significant Risk Threshold, please visit FRA's public Web site at *http://www.fra.dot.gov*.

CROSSING CORRIDOR RISK INDEX

The Crossing Corridor Risk Index is the average of the risk indexes of all the public crossings in a defined rail corridor.

QUIET ZONE RISK INDEX

The Quiet Zone Risk Index is the average of the risk indexes of all the public crossings in a Quiet Zone. It takes into consideration the absence of the horn sound and any safety measures that may have been installed.

[71 FR 47634, Aug. 17, 2006, as amended at 72 FR 44792, Aug. 9, 2007]

APPENDIX E TO PART 222—REQUIREMENTS FOR WAYSIDE HORNS

This appendix sets forth the following minimum requirements for wayside horn use at highway-rail grade crossings:

1. Highway-rail crossing must be equipped with constant warning time device, if reasonably practical, and power-out indicator;

2. Horn system must be equipped with an indicator or other system to notify the locomotive engineer as to whether the wayside horn is operating as intended in sufficient time to enable the locomotive engineer to sound the locomotive horn for at least 15 seconds prior to arrival at the crossing in the event the wayside horn is not operating as intended;

3. The railroad must adopt an operating rule, bulletin or special instruction requiring that the train horn be sounded if the wayside horn indicator is not visible approaching the crossing or if the wayside horn indicator, or an equivalent system, indicates that the system is not operating as intended;

4. Horn system must provide a minimum sound level of 92 dB(A) and a maximum of 110 dB(A) when measured 100 feet from the centerline of the nearest track;

5. Horn system must sound at a minimum of 15 seconds prior to the train's arrival at the crossing and while the lead locomotive is traveling across the crossing. It is permissible for the horn system to begin to sound simultaneously with activation of the flashing lights or descent of the crossing arm; arm

6. Horn shall be directed toward approaching traffic.

APPENDIX F TO PART 222—DIAGNOSTIC TEAM CONSIDERATIONS

For purposes of this part, a diagnostic team is a group of knowledgeable representatives of parties of interest in a highway-rail grade crossing, organized by the public authority responsible for that crossing who, using crossing safety management principles, evaluate conditions at a grade crossing to make determinations or recommendations for the public authority concerning the safety needs at that crossing. Crossings proposed for inclusion in a quiet zone should be reviewed in the field by a diagnostic team composed of railroad personnel, public safety or law enforcement, engineering personnel from the State agency responsible for grade crossing safety, and other concerned parties.

This diagnostic team, using crossing safety management principles, should evaluate conditions at a grade crossing to make determinations and recommendations concerning safety needs at that crossing. The diagnostic team can evaluate a crossing from many perspectives and can make recommendations as to what safety measures authorized by this part might be utilized to compensate for the silencing of the train horns within the proposed quiet zone.

ALL CROSSINGS WITHIN A PROPOSED QUIET ZONE

The diagnostic team should obtain and review the following information about each crossing within the proposed quiet zone:

1. Current highway traffic volumes and percent of trucks;

2. Posted speed limits on all highway approaches;

3. Maximum allowable train speeds, both passenger and freight;

4. Accident history for each crossing under consideration;

5. School bus or transit bus use at the crossing; and

6. Presence of U.S. DOT grade crossing inventory numbers clearly posted at each of the crossings in question.

The diagnostic team should obtain all inventory information for each crossing and should check, while in the field, to see that inventory information is up-to-date and accurate. Outdated inventory information should be updated as part of the quiet zone development process.

When in the field, the diagnostic team should take note of the physical characteristics of each crossing, including the following items:

1. Can any of the crossings within the proposed quiet zone be closed or consolidated with another adjacent crossing? Crossing elimination should always be the preferred alternative and it should be explored for crossings within the proposed quiet zone.

2. What is the number of lanes on each highway approach? Note the pavement condition on each approach, as well as the condition of the crossing itself.

3. Is the grade crossing surface smooth, well graded and free draining?

4. Does the alignment of the railroad tracks at the crossing create any problems for road users on the crossing? Are the tracks in superelevation (are they banked on a curve?) and does this create a conflict with the vertical alignment of the crossing roadway?

5. Note the distance to the nearest intersection or traffic signal on each approach (if within 500 feet or so of the crossing or if the signal or intersection is determined to have a potential impact on highway traffic at the crossing because of queuing or other special problems).

6. If a roadway that runs parallel to the railroad tracks is within 100 feet of the railroad tracks when it crosses an intersecting road that also crosses the tracks, the appropriate advance warning signs should be posted as shown in the MUTCD.

7. Is the posted highway speed (on each approach to the crossing) appropriate for the alignment of the roadway and the configuration of the crossing?

8. Does the vertical alignment of the crossing create the potential for a ''hump crossing'' where long, low-clearance vehicles might get stuck on the crossing?

9. What are the grade crossing warning devices in place at each crossing? Flashing lights and gates are required for each public crossing in a New Quiet Zone. Are all required warning devices, signals, pavement markings and advance signing in place, visible and in good condition for both day and night time visibility?

10. What kind of train detection is in place at each crossing? Are these systems old or outmoded; are they in need of replacement, upgrading, or refurbishment?

11. Are there sidings or other tracks adjacent to the crossing that are often used to store railroad cars, locomotives, or other equipment that could obscure the vision of road users as they approach the crossings in the quiet zone? Clear visibility may help to reduce automatic warning device violations.

12. Are motorists currently violating the warning devices at any of the crossings at an excessive rate?

13. Do collision statistics for the corridor indicate any potential problems at any of the crossings?

14. If school buses or transit buses use crossings within the proposed quiet zone corridor, can they be rerouted to use a single crossing within or outside of the quiet zone?

Private Crossings Within a Proposed Quiet Zone

In addition to the items discussed above, a diagnostic team should note the following issues when examining any private crossings within a proposed quiet zone:

1. How often is the private crossing used?

2. What kind of signing or pavement markings are in place at the private crossing?

3. What types of vehicles use the private crossing?

School buses
Large trucks
Hazmat carriers
Farm equipment

4. What is the volume, speed and type of train traffic over the crossing?

5. Do passenger trains use the crossing?

6. Do approaching trains sound the horn at the private crossing?

State or local law requires it?
Railroad safety rule requires it?

7. Are there any nearby crossings where train horns sound that might also provide some warning if train horns were not sounded at the private crossing?

8. What are the approach (corner) sight distances?

9. What is the clearing sight distance for all approaches?

10. What are the private roadway approach grades?

11. What are the private roadway pavement surfaces?

Pedestrian Crossings Within a Proposed Quiet Zone

In addition to the items discussed in the section titled, ''All crossings within a proposed quiet zone'', a diagnostic team should note the following issues when examining any pedestrian crossings within a proposed quiet zone:

1. How often is the pedestrian crossing used?

2. What kind of signing or pavement markings are in place at the pedestrian crossing?

3. What is the volume, speed, and type of train traffic over the crossing?

4. Do approaching trains sound the horn at the pedestrian crossing?

State or local law requires it?

Railroad safety rule requires it?

5. Are there any crossings where train horns sound that might also provide some warning if train horns were not sounded at the pedestrian crossing?

6. What are the approach sight distances?

7. What is the clearing sight distance for all approaches?

APPENDIX G TO PART 222—SCHEDULE OF CIVIL PENALTIES [1]

Section	Violation	Willful violation
Subpart B—Use of Locomotive Horns		
§ 222.21 Use of locomotive horn		
(a) Failure to sound horn at grade crossing	$5,000	$7,500
Failure to sound horn in proper pattern	1,000	3,000
(b) Failure to sound horn at least 15 seconds and less than ¼-mile before crossing	5,000	7,500
Sounding the locomotive horn more than 25 seconds before crossing	1,000	2,000
Sounding the locomotive horn more than ¼-mile in advance of crossing	1,000	2,000
§ 222.33 Failure to sound horn when conditions of § 222.33 are not met	5,000	7,500
§ 222.45 Routine sounding of the locomotive horn at quiet zone crossing	5,000	7,500
§ 222.49 (b) Failure to provide Grade Crossing Inventory Form information	2,500	5,000
§ 222.59 (d) Routine sounding of the locomotive horn at a grade crossing equipped with wayside horn	5,000	7,500

PART 223—SAFETY GLAZING STANDARDS—LOCOMOTIVES, PASSENGER CARS AND CABOOSES

Subpart A—General

Sec.
223.1 Scope.
223.3 Application.
223.5 Definitions.
223.7 Responsibility.

Subpart B—Specific Requirements

223.8 Additional requirements for passenger equipment.
223.9 Requirements for new or rebuilt equipment.
223.11 Requirements for existing locomotives.
223.13 Requirements for existing cabooses.
223.15 Requirements for existing passenger cars.
223.17 Identification of equipped locomotives, passenger cars and cabooses.

APPENDIX A TO PART 223—CERTIFICATION OF GLAZING MATERIALS

APPENDIX B TO PART 223—SCHEDULE OF CIVIL PENALTIES

AUTHORITY: 49 U.S.C. 20102–20103, 20133, 20701–20702, 21301–21302, 21304; 28 U.S.C. 2461, note; and 49 CFR 1.49.

Subpart A—General

§ 223.1 Scope.

This part provides minimum requirements for glazing materials in order to protect railroad employees and railroad passengers from injury as a result of objects striking the windows of locomotives, caboose and passenger cars.

[44 FR 77352, Dec. 31, 1979]

§ 223.3 Application.

(a) This part applies to railroads that operate rolling equipment on standard gauge track that is a part of the general railroad system of transportation.

(b) This part does not apply to—

(1) Locomotives, cabooses, and passenger cars that operate only on track inside an installation that is not part of the general railroad system of transportation;

(2) Rapid transit operations in an urban area that are not connected with the general railroad system of transportation.

(3) Locomotives, passenger cars and cabooses that are historical or antiquated equipment and are used only for excursion, educational, recreational

[1] A penalty may be assessed against an individual only for a willful violation. The Administrator reserves the right to assess a penalty of up to $27,000 for any violation where circumstances warrant. See 49 CFR Part 209, appendix A.

purposes or private transportation purposes.

(4) Locomotives that are used exclusively in designated service as defined in § 223.5(m).

[44 FR 77352, Dec. 31, 1979, as amended at 53 FR 28600, July 28, 1988]

§ 223.5 Definitions.

As used in this part—

Administrator means the Administrator of the Federal Railroad Administration or the Administrator's delegate.

Caboose means a car in a freight train intended to provide transportation for crewmembers.

Certified glazing means a glazing material that has been certified by the manufacturer as having met the testing requirements set forth in Appendix A of this part and that has been installed in such a manner that it will perform its intended function.

Designated service means exclusive operation of a locomotive under the following conditions:

(1) The locomotive is not used as an independent unit or the controlling unit is a consist of locomotives except when moving for the purpose of servicing or repair within a single yard area;

(2) The locomotive is not occupied by operating or deadhead crews outside a single yard area; and

(3) The locomotive is stenciled ''Designated Service—DO NOT OCCUPY''.

Emergency window means the segment of a side-facing glazing panel that has been designed to permit rapid and easy removal from inside a passenger car in an emergency situation.

End facing glazing location means any location where a line perpendicular to the plane of the glazing material makes a horizontal angle of 50 degrees or less with the centerline of the locomotive, caboose or passenger car. Any location which, due to curvature of the glazing material, can meet the criteria for either a front facing location or a side facing location shall be considered a front facing location.

FRA means the Federal Railroad Administration.

Locomotive means a self-propelled unit of equipment designed primarily for moving other equipment. It does not include self-propelled passenger cars.

Locomotive cab means that portion of the superstructure designed to be occupied by the crew while operating the locomotive.

Passenger car means a unit of rail rolling equipment intended to provide transportation for members of the general public and includes self-propelled cars designed to carry baggage, mail, express or passengers. This term includes a passenger coach, cab car, and an MU locomotive. This term does not include a private car.

Person includes all categories of entities covered under 1 U.S.C. 1, including, but not limited to, a railroad; any manager, supervisor, official, or other employee or agent of a railroad; any owner, manufacturer, lessor, or lessee of railroad equipment, track, or facilities; any passenger, any trespasser or nontrespasser; any independent contractor providing goods or services to a railroad; and any employee of such owner, manufacturer, lessor, lessee, or independent contractor.

Railroad means:

(1) Any form of non-highway ground transportation that runs on rails or electromagnetic guideways, including

(i) Commuter or other short-haul rail passenger service in a metropolitan or suburban area and commuter railroad service that was operated by the Consolidated Rail Corporation on January 1, 1979, and

(ii) High speed ground transportation systems that connect metropolitan areas, without regard to whether those systems use new technologies not associated with traditional railroads, but does not include rapid transit operations in an urban area that are not connected to the general railroad system of transportation and

(2) A person that provides railroad transportation, whether directly or by contracting out operation of the railroad to another person.

Rebuilt locomotive, caboose or passenger car means a locomotive, caboose or passenger car that has undergone overhaul which has been identified by the railroad as a capital expense under Surface Transportation Board accounting standards.

Side facing glazing location means any location where a line perpendicular to the plane of the glazing material makes an angle of more than 50 degrees with the centerline of the locomotive, caboose or passenger car.

Windshield means the combination of individual units of glazing material of the locomotive, passenger car, or caboose that are positioned in an end facing glazing location.

Yard is a system of auxiliary tracks used exclusively for the classification of passenger or freight cars according to commodity or destination; assembling of cars for train movement; storage of cars; or repair of equipment.

Yard caboose means a caboose that is used exclusively in a single yard area.

Yard locomotive means a locomotive that is operated only to perform switching functions within a single yard area.

[63 FR 24675, May 4, 1998; 63 FR 36376, July 6, 1998, as amended at 73 FR 6399, Feb. 1, 2008]

§ 223.7 Responsibility.

Any person (an entity of any type covered under 1 U.S.C. 1, including but not limited to the following: a railroad; a manager, supervisor, official, or other employee or agent of a railroad; any owner, manufacturer, lessor, or lessee of railroad equipment, track, or facilities; any independent contractor providing goods or services to a railroad; and any employee of such owner, manufacturer, lessor, lessee, or independent contractor) who violates any requirement of this part or causes the violation of any such requirement is subject to a civil penalty of at least $550 and not more than $16,000 per violation, except that: Penalties may be assessed against individuals only for willful violations, and, where a grossly negligent violation or a pattern of repeated violations has created an imminent hazard of death or injury to persons, or has caused death or injury, a penalty not to exceed $27,000 per violation may be assessed. Each day a violation continues shall constitute a separate offense. See appendix B to this part for a statement of agency civil penalty policy.

[53 FR 28601, July 28, 1988, as amended at 53 FR 52930, Dec. 29, 1988; 63 FR 11621, Mar. 10, 1998; 69 FR 30595, May 28, 2004; 72 FR 51197, Sept. 6, 2007]

Subpart B—Specific Requirements

§ 223.8 Additional requirements for passenger equipment.

In addition to the requirements contained in this part, requirements for emergency window exits and window safety glazing on passenger equipment, as defined in § 238.5 of this chapter, are also found in part 238 of this chapter.

[64 FR 25659, May 12, 1999]

§ 223.9 Requirements for new or rebuilt equipment.

(a) Locomotives, including yard locomotives, built or rebuilt after June 30, 1980, must be equipped with certified glazing in all locomotive cab windows.

(b) Cabooses, including yard cabooses, built or rebuilt after June 30, 1980, must be equipped with certified glazing in all windows.

(c) Passenger cars, including self-propelled passenger cars, built or rebuilt after June 30, 1980, must be equipped with certified glazing in all windows and at least four emergency windows.

[44 FR 77352, Dec. 31, 1979, as amended at 45 FR 49271, July 24, 1980; 63 FR 24675, May 4, 1998; 73 FR 6399, Feb. 1, 2008]

§ 223.11 Requirements for existing locomotives.

(a) Locomotives, other than yard locomotives, built or rebuilt prior to July 1, 1980, which are equipped in the forward and rearward end facing glazing locations of the locomotive cab windshield with a glazing material that meets the criteria for either portion of the impact testing required for a Type I test under the provisions of appendix A of this part, will not require the installation of certified glazing in the windshield location except to replace windshield glazing material that is broken or damaged.

(b) Locomotives, other than yard locomotives, built or rebuilt prior to July 1, 1980, which are equipped in all

locomotive cab side facing glazing locations with a glazing material that meets the criteria for either portion of the impact testing required for a Type II test under the provisions of appendix A of this part, will not require the installation of certified glazing in the sidefacing glazing location except to replace sidefacing glazing material that is broken or damaged.

(c) Except for yard locomotives and locomotives equipped as described in paragraphs (a) and (b), of this section, locomotives built or rebuilt prior to July 1, 1980, shall be equipped with certified glazing in all locomotive cab windows after June 30, 1984.

(d) Each locomotive subject to the provisions of paragraph (c) of this section which, as a result of an act of vandalism has a locomotive cab window that is broken or damaged so that the window fails to permit good visibility—

(1) Shall be placed in Designated Service within 48 hours of the time of breakage or damage or

(2) Shall be removed from service until equipped with certified glazing in the following manner:

(i) If the broken or damaged window is a part of the windshield of the locomotive cab, all of the forward and rearward end facing glazing locations of the locomotive cab must be replaced with certified glazing.

(ii) If the broken or damaged window is a part of the sidefacing window of the locomotive cab, all of the sidefacing glazing locations of the locomotive cab must be replaced with certified glazing.

(Sec. 209 of the Federal Railroad Safety Act, 94 Stat. 957 (45 U.S.C. 438); sec. 1.49(m) of the regulations of the Office of the Secretary of Transportation, 49 CFR 1.49(m))

[45 FR 49271, July 24, 1980, as amended at 48 FR 24083, May 31, 1983; 48 FR 56956, Dec. 27, 1983]

§ 223.13 Requirements for existing cabooses.

(a) Cabooses, other than yard cabooses, built or rebuilt prior to July 1, 1980, which are equipped in the forward and rearward end facing glazing locations of the windshield with a glazing material that meets the criteria for either portion of the impact testing required for a Type I test under the provisions of appendix A of this part, will not require the installation of certified glazing in the windshield location except to replace windshield glazing material that is broken or damaged.

(b) Cabooses, other than yard cabooses, built or rebuilt prior to July 1, 1980, which are equipped in all side facing glazing locations with a glazing material that meets the criteria for either portion of the impact testing required for a Type II test under the provisions of appendix A of this part, will not require the installation of certified glazing in the sidefacing glazing locations except to replace sidefacing glazing material that is broken or damaged.

(c) Except for yard cabooses and cabooses equipped as described in paragraphs (a) and (b), cabooses built or rebuilt prior to July 1, 1980, shall be equipped with certified glazing in all windows after June 30, 1984.

(d) Each caboose subject to the provision of paragraph (c) of this section, which, as a result of an act of vandalism, has a window that is broken or damaged so that the window fails to permit good visibility shall be equipped with certified glazing in the following manner:

(1) If the broken window is a part of the windshield, all of the forward and rearward end facing glazing locations must be replaced with certified glazing within 30 days of the date of breakage or damage.

(2) If the broken window is a part of the sidefacing window, all of the sidefacing glazing locations must be replaced with certified glazing within 30 days of the date of breakage.

(Sec. 209 of the Federal Railroad Safety Act, 94 Stat. 957 (45 U.S.C. 438); §1.49(m) of the regulations of the Office of the Secretary of Transportation, 49 CFR 1.49(m))

[44 FR 77352, Dec. 31, 1979, as amended at 48 FR 24083, May 31, 1983; 48 FR 56956, Dec. 27, 1983]

§ 223.15 Requirements for existing passenger cars.

(a) Passenger cars built or rebuilt prior to July 1, 1980, which are equipped in the forward and rearward end facing glazing locations of the windshield with a glazing material that meets the criteria for either portion of

the impact testing required for a Type I test under the provisions of appendix A of this part will not require the installation of certified glazing in the windshield location except to replace windshield glazing material that is broken or damaged.

(b) Passenger cars built or rebuilt prior to July 1, 1980, which are equipped in the sidefacing glazing locations with a glazing material that meets the criteria for either portion of the impact testing required for a Type II test under the provisions of appendix A of this part, will not require the installation of certified glazing except to replace sidefacing glazing material that is broken or damaged.

(c) Except for passenger cars described in paragraphs (a) and (b), passenger cars built or rebuilt prior to July 1, 1980, shall be equipped with certified glazing in all windows and a minimum of four emergency windows after June 30, 1984.

(d) Each passenger car subject to the provisions of paragraph (c) of this section which as a result of an act of vandalism, has a window that is broken or damaged so that the window fails to permit good visibility shall be equipped with certified glazing in the following manner:

(1) When the broken window is a part of the windshield, all of the forward and rearward end facing glazing locations shall be replaced with certified glazing within 30 days of breakage.

(2) When the broken window is a part of the sidefacing window, the glazing in that individual sidefacing glazing location shall be replaced with certified glazing within 30 days of the date of breakage.

(Sec. 209 of the Federal Railroad Safety Act, 94 Stat. 957 (45 U.S.C. 438); sec. 1.49(m) of the regulations of the Office of the Secretary of Transportation, 49 CFR 1.49(m))

[44 FR 77352, Dec. 31, 1979, as amended at 48 FR 24083, May 31, 1983; 48 FR 56956, Dec. 27, 1983]

§ 223.17 Identification of equipped locomotives, passenger cars and cabooses.

Each locomotive, passenger car and caboose that is fully equipped with glazing materials that meet the requirements of this part shall be stencilled on an interior wall as follows:

''Fully Equipped FRA Part 223 glazing'' or similar words conveying that meaning in letters at least ⅜ inch high.

[45 FR 49271, July 24, 1980]

APPENDIX A TO PART 223—CERTIFICATION OF GLAZING MATERIALS

As provided in this part, certified glazing materials installed in locomotives, passenger cars, or cabooses must be certified by the glazing manufacturer in accordance with the following procedures:

a. General Requirements

(1) Each manufacturer that provides glazing materials, intended by the manufacturer for use in achieving compliance with the requirements of this part, shall certify that each type of glazing material being supplied for this purpose has been succcessfully tested in accordance with this appendix and that test verification data is available to a railroad or to FRA upon request.

(2) The test verification data shall contain all pertinent original data logs and documentation that the selection of material samples, test set-ups, test measuring devices, and test procedures were performed by qualified personnel using recognized and acceptable practices and in accordance with this appendix.

b. Testing Requirements

(1) The material to be tested (Target Material) shall be a full scale sample of the largest dimension intended to be produced and installed.

(2) The Target Material shall be representative of production material and shall be selected on a documented random choice basis.

(3) The Target Material shall be securely and rigidly attached in a fixture so that the fixture's own characteristics will not induce test errors.

(4) The Target Material so selected and attached shall constitute a Test Specimen.

(5) The Test Specimen will then be equipped with a Witness Plate that shall be mounted parallel to and at a distance of six inches in back of the Target Material. The Witness Plate shall have at least an area which will cover the full map of the Target Material.

(6) The Witness Plate shall be an unbacked sheet of maximum 0.006 inch, alloy 1100 temper O, aluminum stretched within the perimeter of a suitable frame to provide a taut surface.

(7) The Test Specimen will be positioned so that the defined projectile impacts it at an angle of 90 degrees to the Test Specimen surface.

(8) The point of impact of the defined projectile will be within a radius of 3″ of the centroid of the Target Material.

(9) Velocity screens or other suitable velocity measuring devices will be positioned so as to measure the impact velocity of the defined projectile within a 10% accuracy tolerance, with test modifications made to guarantee that the stipulated minimum velocity requirements are met.

(10) The Test Specimen for glazing material that is intended for use in end facing glazing locations shall be subjected to a Type I test regimen consisting of the following tests:

(i) Ballistic Impact in which a standard 22 caliber long rifle lead bullet of 40 grains in weight impacts at a minimum of 960 feet per second velocity.

(ii) Large Object Impact in which a cinder block of 24 lbs minimum weight with dimensions of 8 inches by 8 inches by 16 inches nominally impacts at the corner of the block at a minimum of 44 feet per second velocity. The cinder block must be of composition referenced in American Society for Testing and Materials (ASTM) Specification C33L or ASTM C90.

(11) The Test Specimen for glazing material that is intended for use only in side facing glazing locations shall be subjected to a Type II test regimen consisting of the following tests:

(i) Ballistic Impact in which a standard 22 caliber long rifle lead bullet of 40 grains in weight impacts at a minimum of 960 feet per second velocity.

(ii) Large Object Impact in which a cinder block of 24 lbs minimum weight with dimensions of 8 inches by 8 inches by 16 inches nominally impacts at the corner of the block at a minimum of 12 feet per second velocity. The cinder block must be of the composition referenced in ASTM C33L or ASTM C90.

(12) Three different test specimens must be subjected to the ballistic impact portion of these tests.

(13) Two different test specimens must be subjected to the large object impact portion of these tests.

(14) A material so tested must perform so that:

(i) there shall be no penetration of the back surfaces (side closest to Witness Plate) of the Target Material by the projectile. Partial penetration of the impact (front) surface of the Target Material does not constitute a failure; and

(ii) there shall be no penetration of particles from the back side of the Target Material through the back side of the prescribed Witness Plate.

(15) Test specimens must consecutively pass the required number of tests at the required minimum velocities. Individual tests resulting in failures at greater than the required minimum velocities may be repeated but a failure of an individual test at less than the minimum velocity shall result in termination of the total test and failure of the material.

(16) After successful completion of the prescribed set of required consecutive tests, a manufacturer may certify in writing that a particular glazing material meets the requirements of these standards.

c. Material Identification

(1) Each individual unit of glazing material shall be permanently marked, prior to installation, to indicate that this type of material has been successfully tested as set forth in this appendix and that marking shall be done in such a manner that it is clearly visible after the material has been installed.

(2) Each individual unit of a glazing material that has successfully passed the Type I testing regimen shall be marked to indicate:

(i) ''FRA Type I'' material;

(ii) the manufacturer of the material;

(iii) the type or brand identification of the material.

(3) Each individual unit of a glazing material that has successfully passed the Type II testing regimen shall be marked to indicate:

(i) ''FRA Type II'' material;

(ii) the manufacturer of the material;

(iii) the type or brand identification of the material.

APPENDIX B TO PART 223—SCHEDULE OF CIVIL PENALTIES [1]

Section	Violation	Willful violation
223.9 New or rebuilt equipment:		
(a) Locomotives	$2,500	$5,000
(b) Cabooses	2,500	5,000
(c) Passenger cars	2,500	5,000
223.11(c) Existing locomotives	2,500	5,000
(d) Repair of window	1,000	2,000
223.13(c) Existing cabooses	2,500	5,000
(d) Repair of window	1,000	2,000
223.15(c) Existing passenger cars	2,500	5,000
(d) Repair of window	1,000	2,000

[1] A penalty may be assessed against an individual only for a willful violation. The Administrator reserves the right to assess a penalty of up to $27,000 for any violation where circumstances warrant. See 49 U.S.C. 21301, 21304, and 49 CFR part 209, appendix A. If more than one item is listed as a type of violation of a given section, each item is also designated by a ''penalty code,'' which is used to facilitate assessment of civil penalties, and which may or may not correspond to any subsection designation(s). For convenience, penalty citations will cite the CFR section and the penalty code, if any. FRA reserves the right, should litigation become necessary, to substitute in its complaint the CFR citation in place of the combined CFR and penalty code citation, should they differ.

Section	Violation	Willful violation
223.17 Identification of units ...	1,000	1,500

[63 FR 24676, May 4, 1998, as amended at 69 FR 30594, May 28, 2004; 73 FR 6400, Feb. 1, 2008]

PART 224—REFLECTORIZATION OF RAIL FREIGHT ROLLING STOCK

Subpart A—General

Sec.
224.1 Purpose and scope.
224.3 Applicability.
224.5 Definitions.
224.7 Waivers.
224.9 Responsibility for compliance.
224.11 Penalties.
224.13 Preemptive effect.
224.15 Special approval procedures.

Subpart B—Application, Inspection, and Maintenance of Retroreflective Material

224.101 General requirements.
224.103 Characteristics of retroreflective sheeting.
224.105 Sheeting dimensions and quantity.
224.106 Location of retroreflective sheeting.
224.107 Implementation schedule.
224.109 Inspection, repair, and replacement.
224.111 Renewal.

APPENDIX A TO PART 224—SCHEDULE OF CIVIL PENALTIES
APPENDIX B TO PART 224—FORM REFLECTORIZATION IMPLEMENTATION COMPLIANCE REPORT
APPENDIX C TO PART 224—GUIDELINES FOR SUBMITTING REFLECTORIZATION IMPLEMENTATION COMPLIANCE REPORTS

AUTHORITY: 49 U.S.C. 20103, 20107, 20148 and 21301; 28 U.S.C. 2461; and 49 CFR 1.49.

SOURCE: 70 FR 62176, Oct. 28, 2005, unless otherwise noted.

Subpart A—General

§ 224.1 Purpose and scope.

(a) The purpose of this part is to reduce highway-rail grade crossing accidents and deaths, injuries, and property damage resulting from those accidents, by enhancing the conspicuity of rail freight rolling stock so as to increase its detectability by motor vehicle operators at night and under conditions of poor visibility.

(b) In order to achieve cost-effective mitigation of collision risk at highway-rail grade crossings, this part establishes the duties of freight rolling stock owners (including those who manage maintenance of freight rolling stock, supply freight rolling stock for transportation, or offer freight rolling stock in transportation) and railroads to progressively apply retroreflective material to freight rolling stock, and to periodically inspect and maintain that material. Freight rolling stock owners, however, are under no duty to install, clean or otherwise maintain, or repair reflective material except as specified in this part.

(c) This part establishes a schedule for the application of retroreflective material to rail freight rolling stock and prescribes standards for the application, inspection, and maintenance of retroreflective material to rail freight rolling stock for the purpose of enhancing its detectability at highway-rail grade crossings. This part does not restrict a freight rolling stock owner or railroad from applying retroreflective material to freight rolling stock for other purposes if not inconsistent with the recognizable pattern required by this part.

§ 224.3 Applicability.

This part applies to all railroad freight cars and locomotives that operate over a public or private highway-rail grade crossing and are used for revenue or work train service, except:

(a) Freight rolling stock that operates only on track inside an installation that is not part of the general railroad system of transportation;

(b) Rapid transit operations in an urban area that are not connected to the general railroad system of transportation;

(c) Locomotives and passenger cars used exclusively in passenger service; or

(d) Freight rolling stock that is subject to a reflectorization requirement promulgated by another Federal agency.

§ 224.5 Definitions.

Administrator means the Administrator of the Federal Railroad Administration or the Administrator's delegate.

Associate Administrator means the Associate Administrator for Safety, Federal Railroad Administration, or the Associate Administrator's delegate.

Damaged means scratched, broken, chipped, peeled, or delaminated.

Flat car means a car having a flat floor or deck on the underframe with no sides, ends or roof (including spine cars, articulated and mult-unit intermodal cars).

Freight rolling stock means:

(1) Any locomotive subject to Part 229 of this chapter used to haul or switch freight cars (whether in revenue or work train service); and

(2) Any railroad freight car (whether used in revenue or work train service).

Freight rolling stock owner means any person who owns freight rolling stock, is a lessee of freight rolling stock, manages the maintenance or use of freight rolling stock on behalf of an owner or one or more lessors or lessees, or otherwise controls the maintenance or use of freight rolling stock.

Locomotive has the meaning assigned by § 229.5 of this chapter, but for purposes of this part applies only to a locomotive used in the transportation of freight or the operation of a work train.

Obscured means concealed or hidden (i.e., covered up, as where a layer of paint or dense chemical residue blocks all incoming light); this term does not refer to ordinary accumulations of dirt, grime, or ice resulting from the normal railroad operating environment.

Person means an entity of any type covered under 1 U.S.C. 1, including but not limited to the following: A railroad; a manager, supervisor, official, or other employee or agent of a railroad; any owner, manufacturer, lessor, or lessee of railroad equipment, track or facilities; any independent contractor providing goods or services to a railroad; and any employee of such an owner, manufacturer, lessor, lessee, or independent contractor.

Railroad means all forms of non-highway ground transportation that run on rails or electromagnetic guideways, including high speed ground transportation systems that connect metropolitan areas, without regard to whether they use new technologies not associated with traditional railroads.

Railroad freight car has the meaning assigned by § 215.5 of this chapter.

Tank car means a rail car, the body of which consists of a tank for transporting liquids.

Universal Machine Language Equipment Register means the database containing information on rail equipment maintained by the Association of American Railroads.

Unqualified Retroreflective Sheeting means engineering grade sheeting, super engineering grade sheeting (enclosed lens) or high-intensity type sheeting (ASTM Type I, II, III, or IV Sheeting) as described in ASTM International Standard D–4956–04, ''Standard Specification for Retroreflective Sheeting for Traffic Control.''

Work train means a non-revenue service train used for the maintenance and upkeep service of the railroad.

§ 224.7 Waivers.

(a) Any person subject to a requirement of this part may petition the Administrator for a waiver of compliance with such requirement. The filing of such a petition does not affect that person's responsibility for compliance with that requirement while the petition is being considered.

(b) Each petition for waiver under this section shall be filed in the manner and contain the information required by part 211 of this chapter.

(c) If the Administrator finds that a waiver of compliance is in the public interest and is consistent with railroad safety, the Administrator may grant the waiver subject to any conditions that the Administrator deems necessary.

§ 224.9 Responsibility for compliance.

(a) Freight rolling stock owners, railroads, and (with respect to certification of material) manufacturers of retroreflective material, are primarily responsible for compliance with this part. However, any person that performs any function or task required by this part (including any employee, agent, or contractor of the aforementioned), must perform that function in accordance with this part.

(b) Any person performing any function or task required by this part shall be deemed to have consented to FRA

inspection of the person's facilities and records to the extent necessary to determine whether the function or task is being performed in accordance with the requirements of this part.

§ 224.11 Penalties.

(a) Any person (including but not limited to a railroad; any manager, supervisor, official, or other employee or agent of a railroad; any owner, manufacturer, lessor, or lessee of railroad equipment, track, or facilities; any employee of such owner, manufacturer, lessor, lessee, or independent contractor) who violates any requirement of this part or causes the violation of any such requirement is subject to a civil penalty of at least $550, but not more than $16,000 per violation, except that: Penalties may be assessed against individuals only for willful violations, and, where a grossly negligent violation or a pattern of repeated violations has created an imminent hazard of death or injury to persons, or has caused death or injury, a penalty not to exceed $27,000 per violation may be assessed. Each day a violation continues shall constitute a separate offense. Appendix A to this part contains a schedule of civil penalty amounts used in connection with this part.

(b) Any person who knowingly and willfully falsifies a record or report required by this part is subject to criminal penalties under 49 U.S.C. 21311.

[70 FR 62176, Oct. 28, 2005, as amended at 72 FR 51197, Sept. 6, 2007]

§ 224.13 Preemptive effect.

Under 49 U.S.C. 20106, issuance of this part preempts any State law, rule, regulation, or order covering the same subject matter, except an additional or more stringent law, rule, regulation, or order that is necessary to eliminate or reduce an essentially local safety hazard; that is not incompatible with a law, rule, regulation, or order of the United States Government; and that does not unreasonably burden interstate commerce.

§ 224.15 Special approval procedures.

(a) *General*. The following procedures govern consideration and action upon requests for special approval of alternative standards under § 224.103(e).

(b) *Petitions*. (1) Each petition for special approval of an alternative standard shall contain—

(i) The name, title, address, and telephone number of the primary person to be contacted with regard to the petition;

(ii) The alternative proposed, in detail, to be substituted for the particular requirements of this part; and

(iii) Appropriate data and analysis establishing that the alternative will provide at least an equivalent level of safety and meet the requirements of § 224.103(e).

(2) Three copies of each petition for special approval of an alternative standard shall be submitted to the Docket Clerk, Office of Chief Counsel, Federal Railroad Administration, RCC–10, Mail Stop 10, 1120 Vermont Ave., NW., Washington, DC 20590.

(c) *Notice*. FRA will publish a notice in the FEDERAL REGISTER concerning each petition under paragraph (b) of this section.

(d) *Public comment*. FRA will provide a period of not less than 30 days from the date of publication of the notice in the FEDERAL REGISTER during which any person may comment on the petition.

(1) Each comment shall set forth specifically the basis upon which it is made, and contain a concise statement of the interest of the commenter in the proceeding.

(2) Each comment shall be submitted to the DOT Central Docket Management System, Nassif Building, Room PL–401, 400 Seventh Street, SW., Washington, DC 20590, and shall contain the assigned docket number which appears in the FEDERAL REGISTER for that proceeding. The form of such submission may be in written or electronic form consistent with the standards and requirements established by the Central Docket Management System and posted on its Web site at *http://dms.dot.gov*.

(3) In the event FRA determines that it requires additional information to appropriately consider the petition, FRA will conduct a hearing on the petition in accordance with the procedures provided in § 211.25 of this chapter.

(e) *Disposition of petitions*. (1) If FRA finds that the petition complies with

the requirements of this section and that the proposed alternative standard is acceptable or changes are justified, or both, the petition will be granted, normally within 90 days of its receipt. The Associate Administrator may determine the applicability of other technical requirements of this part when rendering a decision on the petition. If the petition is neither granted nor denied within 90 days, the petition remains pending for decision. FRA may attach special conditions to the approval of the petition. Following the approval of a petition, FRA may reopen consideration of the petition for cause stated.

(2) If FRA finds that the petition does not comply with the requirements of this section, or that the proposed alternative standard is not acceptable or that the proposed changes are not justified, or both, the petition will be denied, normally within 90 days of its receipt.

(3) When FRA grants or denies a petition, or reopens consideration of a petition, written notice is sent to the petitioner and other interested parties and a copy of the notice is placed in the electronic docket of the proceeding.

Subpart B—Application, Inspection, and Maintenance of Retroreflective Material

§ 224.101 General requirements.

All rail freight rolling stock subject to this part shall be equipped with retroreflective sheeting that conforms to the requirements of this part. Notwithstanding any other provision of this chapter, the application, inspection, and maintenance of that sheeting shall be conducted in accordance with this subpart or in accordance with an alternative standard providing at least an equivalent level of safety after special approval of FRA under § 224.15.

§ 224.103 Characteristics of retroreflective sheeting.

(a) *Construction*. Retroreflective sheeting applied pursuant to this part shall consist of a smooth, flat, transparent exterior film with microprismatic retroreflective elements embedded in or suspended beneath the film so as to form a non-exposed retroreflective optical system.

(b) *Color*. Retroreflective sheeting applied pursuant to this part shall be yellow, fluorescent yellow, or white as specified by the chromaticity coordinates of ASTM International's Standard D 4956–04, ''Standard Specification for Retroreflective Sheeting for Traffic Control.'' The Director of the Federal Register approves the incorporation by reference of this standard in this section in accordance with 5 U.S.C. 552(a) and 1 CFR part 51. You may obtain a copy of the incorporated standard from ASTM International, 100 Barr Harbor Drive, P.O. Box C700, West Conshohocken, PA 19428–2959 or at *http://www.astm.org*. You may inspect a copy of the incorporated standard at the Federal Railroad Administration, Docket Clerk, 1120 Vermont Ave., NW., Suite 7000, or at the National Archives and Records Administration (NARA). For information on the availability of this material at NARA, call 202–741–6030, or go to *http://www.archives.gov/federal_register/code_of_federal_regulations/ibr_locations.html*.

(c) *Performance*. Retroreflective sheeting applied pursuant to this part shall meet the requirements of ASTM D 4956–04, for Type V Sheeting if metalized or Type VII Sheeting if non-metalized, except for the initial minimum values of the coefficient of retroreflection, and shall, as initially applied, meet the minimum values for the coefficient of retroreflection specified in Table 1 of this subpart.

TABLE 1 OF SUBPART B TO PART 224—MINIMUM COEFFICIENT OF RETROREFLECTION (R_A) (IN CANDELA/LUX/METER^2) REQUIREMENT FOR RETROREFLECTIVE SHEETING (MINIMUM PHOTOMETRIC PERFORMANCE REQUIREMENTS)

Entrance angle	Observation angle			
	0.2 Degree		0.5 Degree	
	Yellow or fluorescent yellow	White	Yellow or fluorescent yellow	White
−4°	400	600	100	160
30°	220	350	45	75

(d) *Certification*. The characters ''FRA–224'', constituting the manufacturer's certification that the retroreflective sheeting conforms to the requirements of paragraphs (a) through (c) of this section, shall appear at least once on the exposed surface of each piece of sheeting in the final application. The characters shall be a minimum of three millimeters high, and shall be permanently stamped, etched, molded, or printed within the product and each certification shall be spaced no more than four inches apart.

(e) *Alternative standards*. Upon petition by a freight rolling stock owner or railroad under § 224.15, the Associate Administrator may approve an alternative technology as providing equivalent safety. Any such petition shall provide data and analysis sufficient to establish that the technology will result in conspicuity and durability at least equal to sheeting described in paragraphs (a) through (c) applied in accordance with this part and will present a recognizable visual target that is suitably consistent with freight rolling stock equipped with retroreflective sheeting meeting the technical requirements of this part to provide the intended warning to motorists.

§ 224.105 Sheeting dimensions and quantity.

Retroreflective sheeting shall be applied along the length of each railroad freight car and locomotive side as described in § 224.106. Unless otherwise specified, retroreflective sheeting applied under this part shall be applied in strips 4 inches wide and 18 or 36 inches long, as practicable. The amount of retroreflective sheeting to be applied to each car or locomotive subject to this part is dependent on the length of the car or locomotive and the color of the sheeting. For purposes of this part, the length of a railroad freight car or locomotive is measured from endsill to endsill, exclusive of the coupler and draft gear. Each side of a railroad freight car subject to this part, including each unit of multi-unit cars, and each side of a locomotive subject to this part must be equipped with at least the minimum amount of retroreflective sheeting specified in Table 2 of this subpart.

TABLE 2 OF SUBPART B TO PART 224—MINIMUM QUANTITY REQUIREMENT FOR RETROREFLECTIVE SHEETING ON FREIGHT ROLLING STOCK

Freight car or locomotive length	Minimum area of retroreflective sheeting required (per car/locomotive side)—yellow sheeting (ft^2)	Minimum area of retroreflective sheeting required (per car/locomotive side)—white sheeting (ft^2)
Less than 50 ft.	3.5	4.0
Over 50 ft. to 60 ft.	4.0	5.0
Over 60 ft. to 70 ft.	4.5	5.5
Over 70 ft. to 80 ft.	5.0	6.0
Over 80 ft. to 90 ft.	5.5	7.0
Over 90 ft. to 100 ft. [1]	6.0	7.5

[1] Freight cars or locomotives over 100 ft. in length must be equipped with an additional one-half a square foot of sheeting on each side for every additional 10 feet of length.

§ 224.106 Location of retroreflective sheeting.

(a) *Railroad freight cars*. The retroreflective sheeting shall be applied along the length of each railroad freight car side in the manner provided by a uniform industry standard accepted by the Associate Administrator that provides for distribution of material along the length of each car and as close as practicable to 42 inches above the top of rail. In the event such a standard is not proffered by industry or

accepted by the Associate Administrator, the criteria set forth in this subpart shall apply. Retroreflective sheeting applied under this part must be located clear of appurtenances and devices such as ladders and other safety appliances, pipes, or other attachments that may obscure its visibility. Retroreflective sheeting need not be applied to discontinuous surfaces such as bolts, rivets, door hinges, or other irregularly shaped areas that may prevent the sheeting from adhering to the car sides. In addition, retroreflective sheeting need not be applied over existing or required car stencils and markings. If necessary to avoid appurtenances, discontinuous surfaces, or existing or required car markings or stencils, 4x18 and 4x36 inch strips of retroreflective material may be divided into 4x9 inch strips and applied on either side of the appurtenance, discontinuous surface, or car markings or stencils, as practicable. Unless otherwise specified, retroreflective sheeting shall be applied along the sides of freight rolling stock at intervals not to exceed every 12 feet, as practicable. If it is not practicable to apply retroreflective sheeting every 12 feet because of existing stencils, appurtenances, or discontinuous surfaces, the sheeting shall be applied at the next smallest interval practicable.

(1) *General rule.* On railroad freight cars other than flat cars and tank cars, retroreflective sheeting shall be applied in either a vertical or horizontal pattern along the length of the car sides, with the bottom edge of the sheeting as close as practicable to 42 inches above the top of rail. Retroreflective sheeting shall not be applied below the side sill.

(i) *Vertical application.* If retroreflective sheeting is applied in a vertical pattern, at least one 4x36 inch strip or two 4x18 inch strips, one above the other, shall be applied as close to each end of the car as practicable. Between these two vertical end strips, a minimum of one 4x18 inch strip shall be applied at least every 12 feet, as practicable. *See* Figures 1, 2 and 3.

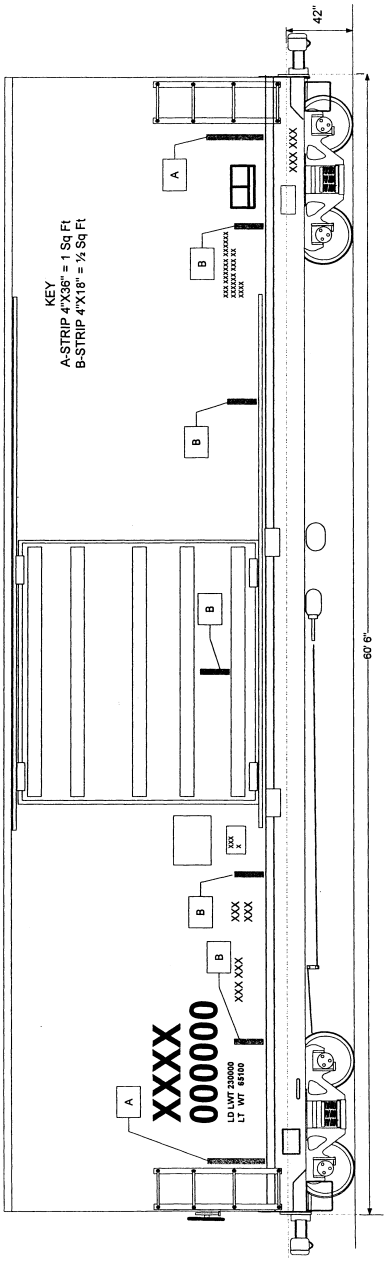

Figure 1
Yellow vertical reflective sheeting (4.5 sq. ft.) pattern applied to a typical 60' 6" Box Car (additional sheeting required per 49 CFR 224.105 if white sheeting is applied in lieu of yellow)

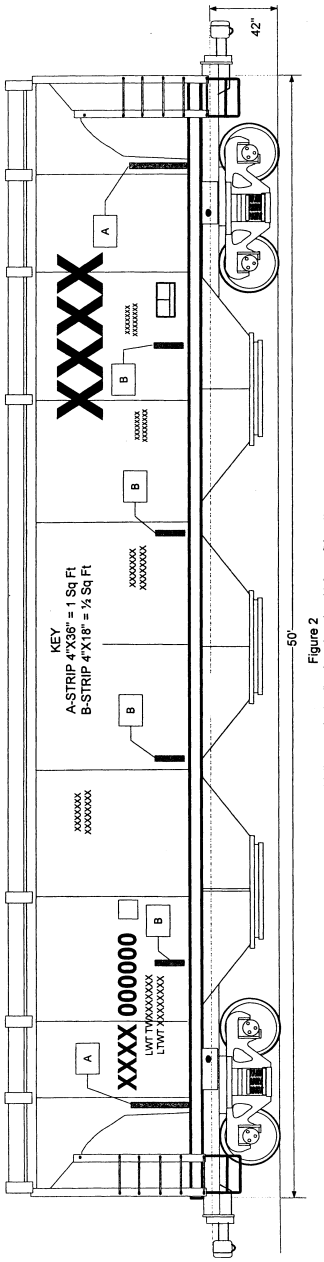

Figure 2
Yellow vertical reflective sheeting (4.0 sq. ft.) pattern applied to a typical 50 feet Covered Hopper Car (additional sheeting required per 49 CFR 224.105 if white sheeting is applied in lieu of yellow)

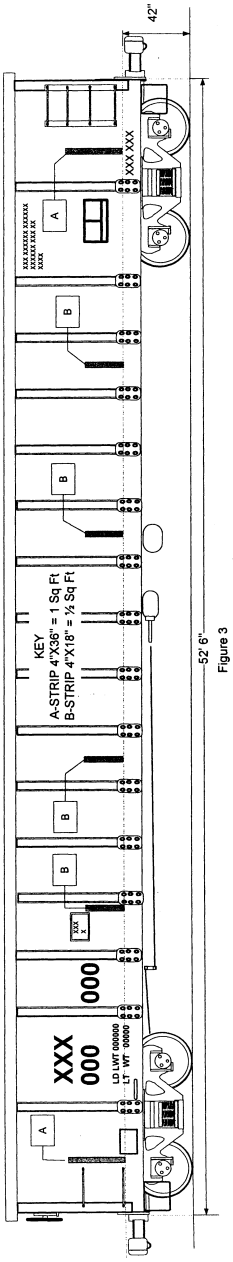

Figure 3
Yellow vertical reflective sheeting (4.0 sq. ft.) pattern applied to a typical 52' 6" Gondola Car (additional sheeting required per 49 CFR 224.105 if white sheeting is applied in lieu of yellow

(ii) *Horizontal application.* If retroreflective sheeting is applied in a horizontal pattern, at least one 4x36 inch strip, or two 4x18 inch strips, one above or next to the other, shall be applied as close to each end of the car as practicable. Between these end strips, a minimum of one 4x18 inch strip shall be

applied at least every 12 feet, as practicable. *See* Figures 4, 5, and 6.

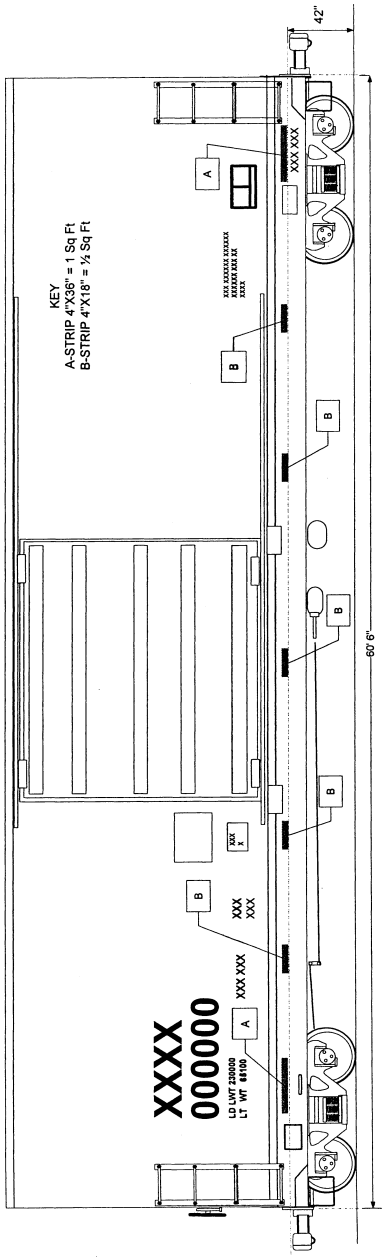

Figure 4
Alternate Pattern
Yellow horizontal reflective sheeting (4.5 sq. ft.) pattern applied to a typical 60' 6" Box Car (additional sheeting required per 49 CFR 224.105 if white sheeting is applied in lieu of yellow)

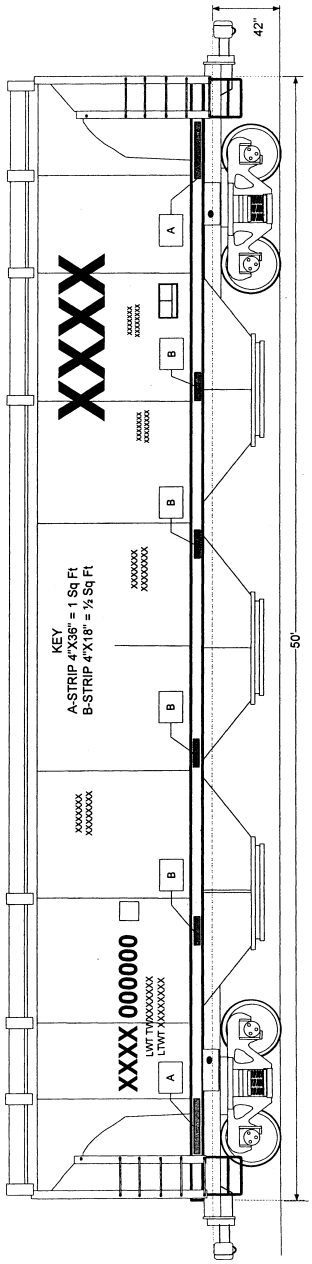

Figure 5
Alternate Pattern
Yellow horizontal reflective sheeting (4.0 sq. ft.) pattern applied to a typical 50 feet Covered Hopper Car (additional sheeting required per 49 CFR 224.105 if white sheeting is applied in lieu of yellow)

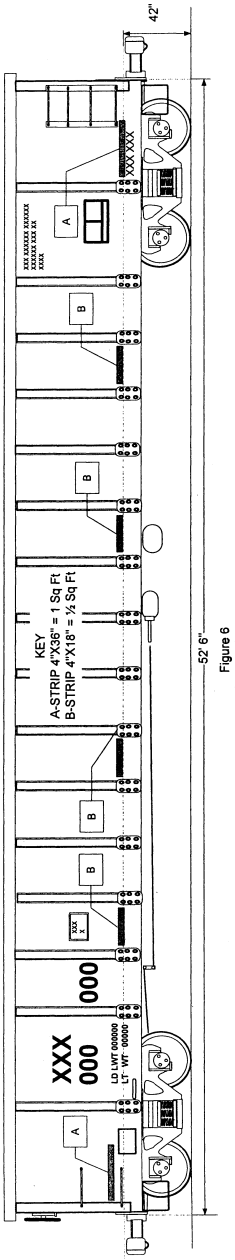

Figure 6
Alternate Pattern
Yellow horizontal reflective sheeting (4.0 sq. ft.) pattern applied to a typical 52' 6" Gondola Car (additional sheeting required per 49 CFR 224.105 if white sheeting is applied in lieu of yellow)

(2) *Tank cars.* On tank cars, retroreflective sheeting shall be applied vertically to each car side and centered on the horizontal centerline of the tank, or as near as practicable. If it is not practicable to safely apply the sheeting centered vertically about the horizontal centerline of the tank,

the sheeting may be applied vertically with its top edge no lower than the horizontal centerline of the tank. A minimum of either one 4x36 inch strip or two 4x18 inch strips, one above the other, shall be applied as close to each end of the car as practicable. Between these two end strips, a minimum of one 4x18 inch strip shall be applied at least every 12 feet, as practicable. Retroreflective sheeting applied under this part shall not be located in the spillage area directly beneath the manway used to load and unload the tank. *See* Figures 7 and 8.

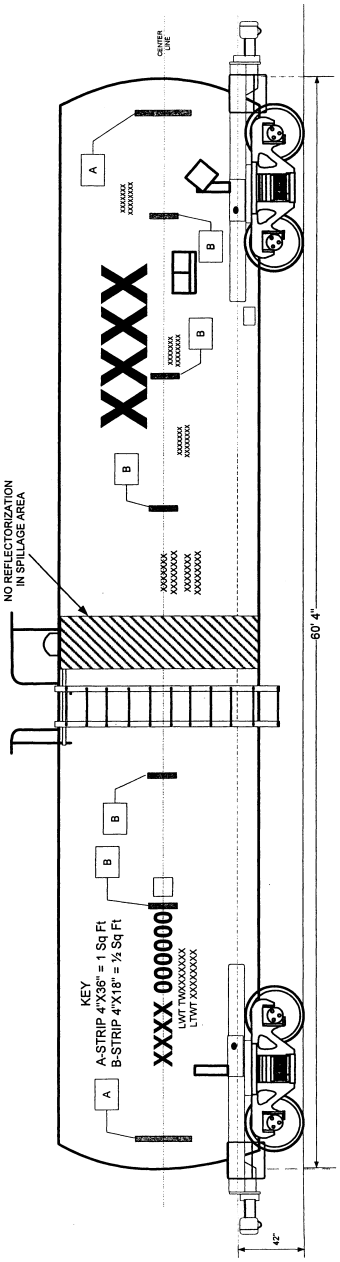
NO REFLECTORIZATION
IN SPILLAGE AREA
KEY
A-STRIP 4"X36" = 1 Sq Ft
B-STRIP 4"X18" = ½ Sq Ft
XXXX 000000
LWT TWXXXXXXX
LTWT XXXXXXXX
XXXXXXX
XXXXXXXX
XXXXXXXX
XX

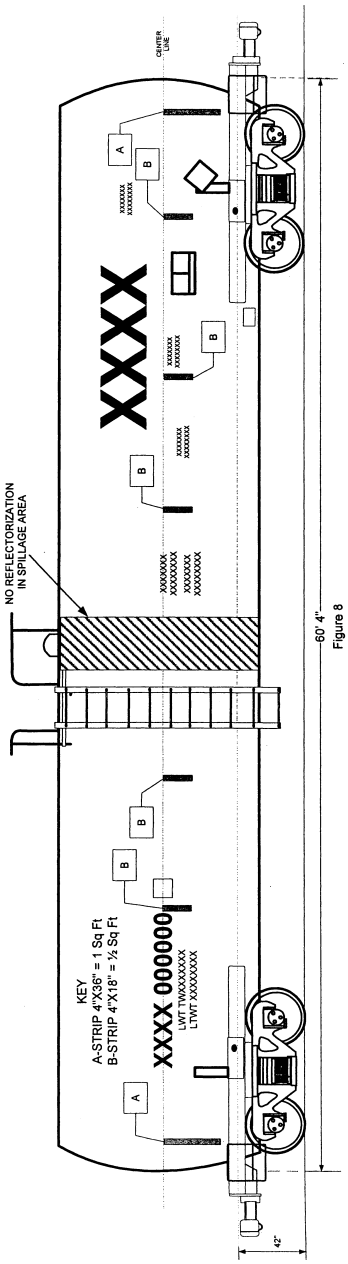

Figure 8
Yellow vertical reflective sheeting (4.5 sq. ft.) pattern applied to a typical Tank Car between 60' and 70' (additional sheeting required per 49 CFR 224.105 if white sheeting is applied in lieu of yellow)

(3) *Flat cars.* On flat cars, retroreflective sheeting shall be applied in a horizontal pattern along the length of the side sill with the bottom edge of the sheeting no lower than the bottom of the side sill and the top edge of the sheeting no higher than the top of the car deck or floor. At least two

4x18 inch strips, one above the other, shall be applied as close to each end of the car as practicable. If the side sill is less than 8 inches wide, one 4x36 inch strip, or two 4x18 inch strips may be applied one next to the other, dividing the strips into nine inch segments as necessary in accordance with paragraph (a) of this section. Between the two end strips, a minimum of one 4x18 inch strip shall be applied at least every 12 feet, as practicable. *See* Figure 9. If a car has a separate rack structure, retroreflective sheeting may be applied to the flat car portion only in accordance with the requirements of this section. For cars without continuous side sills, retroreflective sheeting may be applied to other surfaces inboard of the sides, such as the center sill, provided that the sheeting is not obscured by other components.

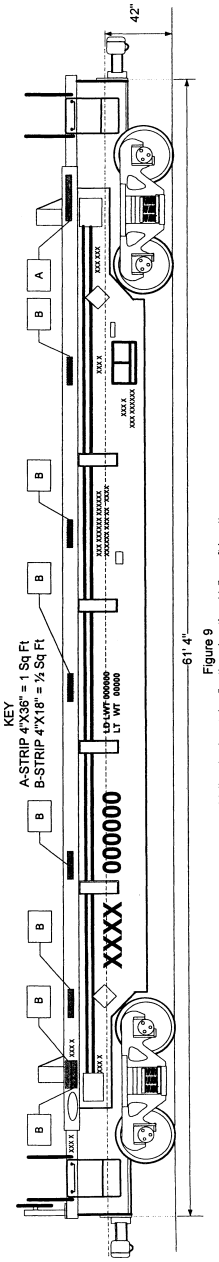

Figure 9
Yellow horizontal reflective sheeting (4.5 sq. ft.) pattern applied to a typical Flat Car (additional sheeting required per 49 CFR 224.105 if white sheeting is applied in lieu of yellow)

(4) *Cars of special construction.* This paragraph applies to any car the design of which is not compatible with the patterns of application otherwise provided in this section. Retroreflective sheeting shall conform as closely as practicable to the requirements of paragraphs (a)(1) through (a)(3) of this

section and shall have the minimum amount of sheeting described in § 224.105 distributed along the length of each car side.

(b) *Locomotives*. Locomotives subject to this part shall be equipped with at least the minimum amounts of retroreflective sheeting required by § 224.105 either in strips four inches wide and 18 or 36 inches long and spaced as uniformly as practicable along the length of the locomotive sides, or in one continuous strip, at least four inches wide, along the length of the locomotive. Retroreflective sheeting applied to locomotive sides shall be applied as close as practicable to 42 inches from the top of the rail.

§ 224.107 Implementation schedule.

(a) *Railroad freight cars*. All railroad freight cars subject to this part must be equipped with retroreflective sheeting conforming to this part by November 28, 2015. If a car already has reflective material applied that does not meet the standards of this part, it is not necessary to remove the material unless its placement interferes with the placement of the sheeting required by this part.

(1) *New cars*. Retroreflective sheeting conforming to this part must be applied to all cars constructed after January 26, 2006, before the cars are placed in service.

(2) *Existing cars without retroreflective sheeting*. (i) If, as of October 28, 2005, a car subject to this part is not equipped on each side with at least one square foot of retroreflective sheeting as specified in paragraph (a)(3) of this section, retroreflective sheeting conforming to this part must be applied to the car at the earliest of the following two occasions occurring after November 28, 2005 or in accordance with paragraph (a)(2)(ii) of this section:

(A) When the car is repainted or rebuilt; or

(B) Within nine months (270 calendar days) after the car first undergoes a single car air brake test as prescribed by 49 CFR 232.305.

(ii) A freight rolling stock owner may elect not to follow the schedule in paragraph (a)(2)(i) of this section if, not later than January 26, 2006 the freight rolling stock owner submits to FRA a completed Reflectorization Implementation Compliance Report certifying that the cars in the owner's fleet subject to this part will be equipped with retroreflective sheeting as required by this part in accordance with the schedule specified in Table 3 of this section. *See* Appendix B of this part for Reflectorization Implementation Compliance Report form.

TABLE 3 OF SUBPART B TO PART 224—ALTERNATIVE SCHEDULE FOR APPLICATION OF RETROREFLECTIVE MATERIAL TO FREIGHT CARS PER § 224.107(A)(2)(II)

(A) [1]	(B) (percent)
November 28, 2007	20
November 28, 2008	30
November 28, 2009	40
November 28, 2010	50
November 28, 2011	60
November 28, 2012	70
November 28, 2013	80
November 28, 2014	90
November 28, 2015	100

[1] Column (A) indicates the date by which the minimum percentage of an owner's freight cars specified in column (B) must be equipped with retroreflective sheeting conforming to this part.

Thereafter,

(A) The designated fleet shall be equipped with retroreflective sheeting according to the schedule specified in Table 3 of this section;

(B) No later than January 28, 2008, the freight rolling stock owner shall submit to FRA an updated Reflectorization Implementation Compliance Report showing which cars of the fleet subject to this part were equipped with retroreflective sheeting as required by this part during the initial 24-month implementation period. Thereafter, updated Reflectorization Implementation Compliance Reports shall be submitted annually, no later than December 31 of each year for the duration of the 10-year implementation period. *See* Appendix B of this part.

(C) If, following the conclusion of the initial 24-month period or any 12-month period thereafter, the percentage requirements of this section have not been met—

(*1*) The freight rolling stock owner shall be considered in violation of this part;

(*2*) The freight rolling stock owner shall, within 60 days after the close of the period, report the failure to the Associate Administrator;

(*3*) The requirements of paragraph (a)(2)(i) shall apply to all railroad freight cars subject to this part in the freight rolling stock owner's fleet; and

(*4*) The fleet owner shall take such additional action as may be necessary to achieve future compliance.

(D) Cars to be retired shall be included in the fleet total until they are retired.

(3) *Existing cars with retroreflective sheeting*. If as of October 28, 2005, a car is equipped on each side with at least one square foot of retroreflective sheeting, uniformly distributed over the length of each side, that car shall be considered in compliance with this part through November 28, 2015, provided the sheeting is not unqualified retroreflective sheeting, and provided the freight rolling stock owner files a completed Reflectorization Implementation Compliance Report with FRA no later than January 26, 2006 identifying the cars already so equipped. *See* Appendix B of this part for Reflectorization Implementation Compliance form.

(b) *Locomotives*. Except as provided in paragraph (b)(4) of this section, all locomotives subject to this part must be equipped with conforming retroreflective sheeting by November 28, 2010. If a locomotive already has reflective material applied that does not meet the standards of this part, it is not necessary to remove the material unless its placement interferes with the placement of the sheeting required by this part.

(1) *New locomotives*. Retroreflective sheeting conforming to this part must be applied to all locomotives constructed after January 26, 2006, before they are placed in service.

(2) *Existing locomotives without retroreflective sheeting*.

(i) If as of October 28, 2005 a locomotive subject to this part is not equipped with the minimum amount of retroreflective sheeting specified in paragraph (b)(3) of this section, retroreflective sheeting conforming to this part must be applied to the locomotive not later than nine months after the first biennial inspection performed pursuant to 49 CFR 229.29 occurring after November 28, 2005.

(ii) A freight rolling stock owner may elect not to follow the schedule in paragraph (b)(2)(i) of this section, if not later than January 26, 2006, the freight rolling stock owner submits to FRA a Reflectorization Implementation Compliance Report certifying that the locomotives in the owner's fleet subject to this part will be equipped with retroreflective sheeting as required by this part in accordance with the schedule specified in Table 4 of this section. *See* Appendix B of this part.

TABLE 4 OF SUBPART B TO PART 224—ALTERNATIVE SCHEDULE FOR APPLICATION OF RETROREFLECTIVE MATERIAL TO LOCOMOTIVES PER § 224.107(B)(2)(II)

(A) [1]	(B) (percent)
November 28, 2007	40
November 28, 2008	60
November 28, 2009	80
November 28, 2010	100

[1]Column (A) indicates the date by which the minimum percentage of an owner's locomotives specified in column (B) must be equipped with retroreflective sheeting conforming to this part.

Thereafter,

(A) The designated locomotive fleet shall be equipped with retroreflective sheeting according to the requirements of this paragraph (b)(2)(ii);

(B) No later than January 28, 2008, the freight rolling stock owner shall submit to FRA an updated Reflectorization Implementation Compliance Report showing which locomotives of the fleet subject to this part were equipped with retroreflective sheeting as required by this part during the initial 24 month implementation period. Updated Reflectorization Implementation Compliance Reports shall be submitted annually, no later than December 31 of each year, for the duration of the 5-year implementation period. *See* Appendix B of this part.

(C) If, following the conclusion of the initial 24-month period or any 12-month period thereafter, the percentage requirements of this section have not been met—

(*1*) The freight rolling stock owner shall be considered in violation of this part;

(*2*) The freight rolling stock owner shall, within 60 days after the close of the period, report the failure to the Associate Administrator;

(*3*) The requirements of paragraph (b)(2)(i) shall apply to all locomotives subject to this part in the freight rolling stock owner's fleet; and

(*4*) The fleet owner shall take such additional action as may be necessary to achieve future compliance.

(D) Locomotives to be retired shall be included in the fleet total until they are retired.

(3) *Existing locomotives with retroreflective sheeting*. If as of October 28, 2005, a locomotive is equipped on each side with at least one square foot of retroreflective sheeting, that locomotive shall be considered in compliance with this part for through November 28, 2015, provided the existing material is not unqualified retroreflective sheeting, and provided the freight rolling stock owner files a Reflectorization Implementation Compliance Report with FRA no later than January 26, 2006, identifying the cars already so

equipped. *See* Appendix B of this part. If, as of October 28, 2005, a locomotive is equipped with unqualified retroreflective sheeting, the locomotive will be considered in compliance with this part through November 28, 2015, provided the locomotive is equipped with a minimum of 3 square feet of retroreflective material on each side and provided the freight rolling stock owner files a Reflectorization Implementation Compliance Report with FRA no later than January 26, 2006, identifying the locomotives already so equipped. *See* Appendix B of this part.

(4) Each railroad that has fewer than 400,000 annual employee work hours as of the end of calendar year 2004, and does not share locomotive power with another railroad with 400,000 or more annual employee work hours, may bring its locomotive fleet into compliance according to the following schedule: fifty percent of the railroad's locomotives must be retrofitted pursuant to § 224.106(b) by October 28, 2010, and one hundred percent must be retrofitted pursuant to § 224.106(b) by October 28, 2015. If a railroad with fewer than 400,000 annual employee work hours shares locomotive power with a railroad with 400,000 or more annual employee work hours, the smaller railroad must comply with the requirements of paragraphs (b)(2) and (3) of this section.

§ 224.109 Inspection, repair, and replacement.

(a) *Railroad freight cars.* Retroreflective sheeting on railroad freight cars subject to this part must be visually inspected for presence and condition whenever a car undergoes a single car air brake test required under 49 CFR 232.305. If at the time of inspection less than 80 percent of the amount of sheeting required under § 224.105 (§ 224.107 in the case of freight cars subject to § 224.107(a)(3)) on either side of a car is present, not damaged, and not obscured, the inspecting railroad or contractor shall promptly notify the person responsible for the reporting mark, as indicated in the Universal Machine Language Equipment Register, of the damaged, obscured, or missing sheeting (unless the inspecting railroad or contractor is the person responsible for the reporting mark). The inspecting railroad or contractor shall retain a written or electronic copy of each such notification made for at least two years from the date of the notice and shall make these records available for inspection and copying by the FRA upon request. Any person notified of a defect under this section shall have nine months (270 calendar days) from the date of notification to repair or replace the damaged, obscured, or missing sheeting. Where the inspecting railroad or contractor is the person responsible for the reporting mark, the person shall have nine months (270 calendar days) from the date of the inspection to repair or replace the damaged, obscured, or missing sheeting.

(b) *Locomotives.* Retroreflective sheeting must be visually inspected for presence and condition when the locomotive receives the annual inspection required under 49 CFR 229.27. If at the time of inspection less than 80 percent of the amount of sheeting required under § 224.105 (§ 224.107 in the case of locomotives subject to § 224.107(b)(3)) on either side of a locomotive is present, not damaged, and not obscured, the damaged, obscured, or missing sheeting must be repaired or replaced within nine months (270 calendar days) from the date of inspection, provided a record of the defect is maintained in the locomotive cab or in a secure and accessible electronic database to which FRA is provided access on request.

§ 224.111 Renewal.

Regardless of condition, retroreflective sheeting required under this part must be replaced with new sheeting no later than ten years after the date of initial installation. At the time of replacement, it is not necessary to remove the old sheeting unless it interferes with the placement of the new sheeting, but the old sheeting shall not be considered in calculating the amount of retroreflective material required under this part. For purposes of this section, November 28, 2005, shall be considered the initial date of installation for freight cars and locomotives covered by § 224.107(a)(3) or 224.107(b)(3).[1]

APPENDIX A TO PART 224—SCHEDULE OF CIVIL PENALTIES

SUBPART B—APPLICATION, INSPECTION, AND MAINTENANCE OF RETROREFLECTIVE MATERIAL

[1] A penalty may be assessed against an individual only for a willful violation. The Administrator reserves the right to assess a penalty of up to $27,000 for any violation where circumstances warrant. *See* 49 CFR Part 209, Appendix A.

Section	Violation	Willful violation
§ 224.103 Characteristics of retroreflective sheeting:		
(a)–(d) Retroreflective sheeting applied does not meet the requirements of § 224.103	$2,500	$5,000
§ 224.105 Sheeting dimensions and quantity:		
Failure to apply minimum amount of retroreflective sheeting in accordance with Table 2	2,500	5,000
Applying retroreflective sheeting of wrong dimensions	2,500	5,000
§ 224.106 Location of retroreflective sheeting:		
(a), (b)Applying retroreflective sheeting in nonconforming pattern	2,000	4,000
§ 224.107 Implementation schedule:		
(a)(1), (b)(1) Failure to apply retroreflective sheeting to new freight car or locomotive before equipment placed in service	5,000	7,500
(a)(2), (b)(2), (b)(4) Failure to apply retroreflective sheeting to existing freight car or locomotive in accordance with minimum schedule of paragraphs (a)(2), (b)(2), or (b)(4)	5,000	7,500
§ 224.109 Inspection, repair, and replacement:		
(a) Failure to perform inspection	5,000	7,500
Failure to properly notify car owner of defect	2,500	5,000
Failure to retain written notification of defect for two years	1,500	2,500
Failure to repair defect after notification	5,000	7,500
(b) Failure to perform inspection	5,000	7,500
Failure to repair defect	5,000	7,500

APPENDIX B TO PART 224—REFLECTORIZATION IMPLEMENTATION COMPLIANCE REPORT

OMB No. 2130-0566

REFLECTORIZATION IMPLEMENTATION COMPLIANCE REPORT

Instructions for completing form:

If submitting this form to FRA as an initial Reflectorization Implementation Compliance Report in accordance with 49 CFR 224.107(a)(2)(ii) and/or (b)(2)(ii), complete Parts I, II, III and IV. If submitting this form in accordance with 49 CFR 224.107(a)(3) and/or (b)(3), complete Parts I, II, III, IV, and V.

If this form is being submitted to FRA as an updated Reflectorization Implementation Compliance Report required by 49 CFR 224.107(a)(2)(ii)(B) or (b)(2)(ii)(B), complete Parts I, II, III, and V. In Part V, report the car/locomotive number(s) identifying each freight car and locomotive equipped with retroreflective sheeting conforming to 49 CFR Part 224 during this reporting period

Part I: Identification

Railroad or Car Owner:

Railroad or Car Owner Reporting Code:

Preparer Information:	
Name:	Title:
Address:	Phone:
	Fax:
	Email:

Part II: Type of Submission

☐ Initial Submission

☐ Updated Compliance Report

Part III: Identification of freight rolling stock fleet subject to 49 CFR Part 224

A. How many freight cars in your fleet are subject to 49 CFR part 224? _____

B. How many locomotives in your fleet are subject to 49 CFR part 224? _____

Part IV: Certification (Complete only if Part II: Type of Submission is Initial Submission)

By filing this Reflectorization Implementation Compliance Report and any accompanying documents or electronic files with FRA, the undersigned Freight Rolling Stock Owner is electing to follow the alternative schedules for equipping its freight rolling stock with reflective material as set forth in 49 CFR §§224.107(a)(2)(ii) and/or (b)(2)(ii). By completing, executing, and filing this Compliance Report with FRA, the undersigned Freight Rolling Stock Owner is certifying that its entire fleet of freight rolling stock subject to 49 CFR Part 224 (Part 224) will be equipped with retroreflective sheeting conforming to the requirements of Part 224 in accordance with the schedules set forth in 49 CFR §224.107(a)(2)(ii) and/or (b)(2)(ii). Failure to meet the minimum requirements of Part 224 may result in the assessment of civil penalties or other enforcement action by FRA.

Signature of Corporate Officer/Car owner:	Date:
Name:	
Title:	

Form FRA F6180.113 11/03

OMB No. 2130-0566

Part V: Identification of rail freight rolling stock conforming to 49 CFR Part 224

Reapplied[a]	Type (check one): Locomotive	Type (check one): Freight Car	Identification Number:	Reapplied[a]	Type (check one): Locomotive	Type (check one): Freight Car	Identification Number:
☐	☐	☐	_____	☐	☐	☐	_____
☐	☐	☐	_____	☐	☐	☐	_____
☐	☐	☐	_____	☐	☐	☐	_____
☐	☐	☐	_____	☐	☐	☐	_____
☐	☐	☐	_____	☐	☐	☐	_____
☐	☐	☐	_____	☐	☐	☐	_____
☐	☐	☐	_____	☐	☐	☐	_____
☐	☐	☐	_____	☐	☐	☐	_____
☐	☐	☐	_____	☐	☐	☐	_____
☐	☐	☐	_____	☐	☐	☐	_____
☐	☐	☐	_____	☐	☐	☐	_____
☐	☐	☐	_____	☐	☐	☐	_____
☐	☐	☐	_____	☐	☐	☐	_____
☐	☐	☐	_____	☐	☐	☐	_____
☐	☐	☐	_____	☐	☐	☐	_____
☐	☐	☐	_____	☐	☐	☐	_____
☐	☐	☐	_____	☐	☐	☐	_____
☐	☐	☐	_____	☐	☐	☐	_____
☐	☐	☐	_____	☐	☐	☐	_____
☐	☐	☐	_____	☐	☐	☐	_____
☐	☐	☐	_____	☐	☐	☐	_____
☐	☐	☐	_____	☐	☐	☐	_____
☐	☐	☐	_____	☐	☐	☐	_____
☐	☐	☐	_____	☐	☐	☐	_____
☐	☐	☐	_____	☐	☐	☐	_____
☐	☐	☐	_____	☐	☐	☐	_____
☐	☐	☐	_____	☐	☐	☐	_____
☐	☐	☐	_____	☐	☐	☐	_____
☐	☐	☐	_____	☐	☐	☐	_____
☐	☐	☐	_____	☐	☐	☐	_____
☐	☐	☐	_____	☐	☐	☐	_____
☐	☐	☐	_____	☐	☐	☐	_____
☐	☐	☐	_____	☐	☐	☐	_____
☐	☐	☐	_____	☐	☐	☐	_____
☐	☐	☐	_____	☐	☐	☐	_____
☐	☐	☐	_____	☐	☐	☐	_____

a. Check if freight car/locomotive was reported in Part V of a previous Reflectorization Implementation Compliance Report as conforming to 49 CFR Part 224, but 100% of the retroreflective sheeting on the car/locomotive was replaced with sheeting conforming to Part 224 in this reporting period.

Public reporting burden for this information collection is estimated to average eight hours per response. This estimate included time for reviewing instructions, searching existing data sources, gathering and maintaining the data needed, and completing and reviewing the collection of information. According to the Paperwork Reduction Act of 1995, no persons are required to respond to a collection of information unless it displays a valid OMB control number. The valid OMB control number for this collection of information is 2130-0566.

Form FRA F6180.113 11/03

APPENDIX C TO PART 224—GUIDELINES FOR ELECTRONIC SUBMISSION OF REFLECTORIZATION IMPLEMENTATION COMPLIANCE REPORTS

Appendix C

Guidelines for Submitting Reflectorization Implementation Compliance Reports
49 C.F.R. Part 224

The guidelines below are intended to provide freight rolling stock owners specific guidance and directions for the submission of "Reflectorization Implementation Compliance Reports" (Form FRA F 6180.113) when required by 49 CFR Part 224. A freight rolling stock owner may also contact the FRA's Office of Safety, Motive, Power, & Equipment Division, for further guidance on the submission of such reports.

Who must file a Reflectorization Implementation Compliance Report with FRA?

(1) A freight rolling stock owner (as defined at 49 CFR § 224.5) electing to follow the implementation schedule of 49 CFR §§ 224.107(a)(2)(ii) or (b)(2)(ii); or
(2) A freight rolling stock owner seeking to have existing freight rolling stock grandfathered pursuant to 49 CFR §§ 224.107(a)(3) or (b)(3).

What are the deadlines for submission of Reflectorization Implementation Compliance Reports?

In order to take advantage of the flexible implementation schedules provided in 49 CFR § 224.107(a)(2)(ii) or (b)(2)(ii) or to have freight rolling stock grandfathered pursuant to 49 CFR §§ 224.107(a)(3) or (b)(3), a freight rolling stock owner must submit initial and updated Compliance Reports with the Federal Railroad Administration (FRA) as follows:

(1) An initial Compliance Report no later [INSERT DATE 90 DAYS AFTER PUBLICATION DATE OF FINAL RULE],
(2) An updated Compliance Report no later than [INSERT DATE 26 MONTHS AFTER EFFECTIVE DATE OF FINAL RULE], and
(3) An updated Compliance Report no later than December 31 of each year for the duration of the implementation period.

See 49 CFR §§ 224.107(a)(2)(ii), (a)(3), (b)(2)(ii), (b)(3).

How do I submit a Compliance Report to FRA?

A Compliance Report may be submitted electronically or by filing a paper copy of completed Form FRA F6180.113 (found in Appendix B to 49 CFR Part 224) by following the directions below. If the electronic media or paper copy does not meet the requirements of 49 CFR Part 224, the entire submission will be returned.

(1) Paper Submission: Complete Parts I, II, III, IV and/or V of Form FRA F 6180.113 as instructed on the Form and send the completed Form to the following address:

Creative Information Technology, Incorporated (CITI)
4601 North Fairfax Drive
Suite 1100
Arlington, VA 22203
703-548-3313 Extension 223
POC: Angelica Mamani

Appendix C

Guidelines for Submitting Reflectorization Implementation Compliance Reports
49 C.F.R. Part 224

(2) Electronic Submission:

(a) Acceptable Disc Media: CD-R storage media only with 700 MB possible range, 1x-48x speed compatible, 4 ½" diameter (Note: CD-RW storage media cannot be accepted)

(b) Specific Directions:

(i) Complete Parts I, II, III, and IV on Form F 6180.113 as instructed on the Form and scan the completed Form FRA F6180.113 onto the disk media into either an Adobe Acrobat format or .jpg format (Note: Forms submitted on CD-RW storage media cannot be accepted and will not be returned); and

(ii) Following the format below, enter the information required by Part V of Form FRA F6180.113 into a spreadsheet in any one of the following formats: MS Excel, Quattro Pro, RTF, or CVS and save that spreadsheet onto the same CD-R disk media as (i) above.

Spreadsheet Format:

Columns on the spreadsheet	Field Name	Size of the Field	Content/Description
A	Car Owner Reporting Code	4 Character	1. The Car Owner Reporting Code found in **Part I** (*Identification*) of the OMB F6180.113. 2. Enter this code in Column A of the spreadsheet. 3. Enter all Capital Letters
B	Identification Number	6 Numbers	1. This is the identification number on **Part V**, (*Identification of rail freight rolling stock confirming to 49 CFR Part 224*). 2. This is the numeric unit identification (use leading zeros) 3. Enter this number in Column B of the spreadsheet.
C	Reapplied	1 Character	1. Has this equipment been reported? 2. Enter 'R' (*replacing the check mark required on the form*), if the car/locomotive was reported in Part V of a previous Reflectorization Implementation Compliance Report. 3. Enter 'I', if the car/locomotive has not been reported previously. 4. Entry must be a capital letter 5. Enter this information in Column C of the spreadsheet.
D	Type	1 character	1. Is this a car/locomotive? 2. Enter 'C' (*replacing the check mark required on the form*), if a rail freight rolling stock car. 3. Enter 'L' (*replacing the check mark required on the form*), if a locomotive. 4. Entry must be a capital letter. 5. Enter this information in Column D of the spreadsheet.

Appendix C

Guidelines for Submitting Reflectorization Implementation Compliance Reports
49 C.F.R. Part 224

(ii) Send the CD-R disk media with the relevant information to FRA at the following address:

Creative Information Technology, Incorporated (CITI)
4601 North Fairfax Drive
Suite 1100
Arlington, VA 22203
703-548-3313 Extension 223
POC: Angelica Mamani

PART 225—RAILROAD ACCIDENTS/INCIDENTS: REPORTS CLASSIFICATION, AND INVESTIGATIONS

Sec.
225.1 Purpose.
225.3 Applicability.
225.5 Definitions.
225.7 Public examination and use of reports.
225.9 Telephonic reports of certain accidents/incidents.
225.11 Reporting of accidents/incidents.
225.12 Rail Equipment Accident/Incident Reports alleging employee human factor as cause; Employee Human Factor Attachment; notice to employee; employee supplement.
225.13 Late reports.
225.15 Accidents/incidents not to be reported.
225.17 Doubtful cases; alcohol or drug involvement.
225.19 Primary groups of accidents/incidents.
225.21 Forms.
225.23 Joint operations.
225.25 Recordkeeping.
225.27 Retention of records.
225.29 Penalties.
225.31 Investigations.
225.33 Internal Control Plans.
225.35 Access to records and reports.
225.37 Magnetic media transfer and electronic submission.
225.39 FRA policy on covered data.
APPENDIX A TO PART 225—SCHEDULE OF CIVIL PENALTIES
APPENDIX B TO PART 225—PROCEDURE FOR DETERMINING REPORTING THRESHOLD

AUTHORITY: 49 U.S.C. 103, 322(a), 20103, 20107, 20901–02, 21301, 21302, 21311; 28 U.S.C. 2461, note; and 49 CFR 1.49.

SOURCE: 39 FR 43224, Dec. 11, 1974, unless otherwise noted.

§ 225.1 Purpose.

The purpose of this part is to provide the Federal Railroad Administration with accurate information concerning the hazards and risks that exist on the Nation's railroads. FRA needs this information to effectively carry out its regulatory responsibilities under 49 U.S.C. chapters 201–213. FRA also uses this information for determining comparative trends of railroad safety and to develop hazard elimination and risk reduction programs that focus on preventing railroad injuries and accidents. Issuance of these regulations under the federal railroad safety laws and regulations preempts States from prescribing accident/incident reporting requirements. Any State may, however, require railroads to submit to it copies of accident/incident and injury/illness reports filed with FRA under this part, for accidents/incidents and injuries/illnesses which occur in that State.

[61 FR 30967, June 18, 1996]

§ 225.3 Applicability.

(a) Except as provided in paragraphs (b), (c), and (d), this part applies to all railroads except—

(1) A railroad that operates freight trains only on track inside an installation which is not part of the general railroad system of transportation or that owns no track except for track that is inside an installation that is not part of the general railroad system of transportation and used for freight operations.

(2) Rail mass transit operations in an urban area that are not connected with the general railroad system of transportation.

(3) A railroad that exclusively hauls passengers inside an installation that is insular or that owns no track except for track used exclusively for the hauling of passengers inside an installation that is insular. An operation is not considered insular if one or more of the following exists on its line:

(i) A public highway-rail grade crossing that is in use;

(ii) An at-grade rail crossing that is in use;

(iii) A bridge over a public road or waters used for commercial navigation; or

(iv) A common corridor with a railroad, *i.e.*, its operations are within 30 feet of those of any railroad.

(b) The Internal Control Plan requirements in § 225.33(a)(3) through (10) do not apply to—

(1) Railroads that operate or own track on the general railroad system of transportation that have 15 or fewer employees covered by the hours of service law (49 U.S.C. 21101–21107) and

(2) Railroads that operate or own track exclusively off the general system.

(c) The recordkeeping requirements regarding accountable injuries and illnesses and accountable rail equipment

accidents/incidents found in § 225.25(a) through (g) do not apply to—

(1) Railroads that operate or own track on the general railroad system of transportation that have 15 or fewer employees covered by the hours of service law (49 U.S.C. 21101–21107) and

(2) Railroads that operate or own track exclusively off the general system.

(d) All requirements in this part to record or report an injury or illness incurred by any classification of person that results from a non-train incident do not apply to railroads that operate or own track exclusively off the general railroad system of transportation, unless the non-train incident involves in- service on-track equipment.

[61 FR 30967, June 18, 1996, as amended at 61 FR 67490, Dec. 23, 1996]

§ 225.5 Definitions.

As used in this part—

Accident/incident means:

(1) Any impact between railroad on-track equipment and an automobile, bus, truck, motorcycle, bicycle, farm vehicle or pedestrian at a highway-rail grade crossing;

(2) Any collision, derailment, fire, explosion, act of God, or other event involving operation of railroad on-track equipment (standing or moving) that results in reportable damages greater than the current reporting threshold to railroad on-track equipment, signals, track, track structures, and roadbed;

(3) Any event or exposure arising from the operation of a railroad, if the event or exposure is a discernable cause of one or more of the following outcomes, and this outcome is a new case or a significant aggravation of a pre-existing injury or illness:

(i) Death to any person;

(ii) Injury to any person that results in medical treatment;

(iii) Injury to a railroad employee that results in:

(A) A day away from work;

(B) Restricted work activity or job transfer; or

(C) Loss of consciousness;

(iv) Occupational illness of a railroad employee that results in any of the following:

(A) A day away from work;

(B) Restricted work activity or job transfer;

(C) Loss of consciousness; or

(D) Medical treatment;

(v) Significant injury to or significant illness of a railroad employee diagnosed by a physician or other licensed health care professional even if it does not result in death, a day away from work, restricted work activity or job transfer, medical treatment, or loss of consciousness;

(vi) Illness or injury that meets the application of any of the following specific case criteria:

(A) Needlestick or sharps injury to a railroad employee;

(B) Medical removal of a railroad employee;

(C) Occupational hearing loss of a railroad employee;

(D) Occupational tuberculosis of a railroad employee; or

(E) Musculoskeletal disorder of a railroad employee if this disorder is independently reportable under one or more of the general reporting criteria.

(4) Occupational illness.

Accountable injury or illness means any condition, not otherwise reportable, of a railroad employee that is discernably caused by an event, exposure, or activity in the work environment which condition causes or requires the railroad employee to be examined or treated by a qualified health care professional.

Accountable rail equipment accident/incident means any event not otherwise reportable, involving the operation of on-track equipment that causes physical damage to either the on-track equipment or the track upon which such equipment was operated and that requires the removal or repair of rail equipment from the track before any rail operations over the track can continue. An accountable rail equipment accident/incident, if not tended to, thus would disrupt railroad service. Examples of ''disruption of service'' would include: loss of main track; one or more derailed wheels; any train failing to arrive or depart at its scheduled time; one or more cars or locomotives taken out of service; or rerouting trains due to a damaged car or locomotive.

Covered data means information that must be reported to FRA under this part concerning a railroad employee injury or illness case that is reportable exclusively because a physician or other licensed health care professional—

(1) Recommended in writing that—

(i) The employee take one or more days away from work when the employee instead reports to work (or would have reported had he or she been scheduled) and takes no days away from work in connection with the injury or illness,

(ii) The employee work restricted duty for one or more days when the employee instead works unrestricted (or would have worked unrestricted had he or she been scheduled) and takes no days of restricted work activity in connection with the injury or illness, or

(iii) The employee take over-the-counter medication at a dosage equal to or greater than the minimum prescription strength, whether or not the employee actually takes the medication; or

(2) Made a one-time topical application of a prescription-strength medication to the employee's injury.

Day away from work means a day away from work as described in paragraph (1) of this definition or, if paragraph (1) does not apply, a day away from work solely for reporting purposes as described in paragraph (2) of this definition. For purposes of this definition, the count of days includes all calendar days, regardless of whether the employee would normally be scheduled to work on those days (*e.g.*, weekend days, holidays, rest days, and vacation days), and begins on the first calendar day after the railroad employee has been examined by a physician or other licensed health care professional (PLHCP) and diagnosed with a work-related injury or illness. In particular, the term means—

(1) Each calendar day that the employee, for reasons associated with his or her condition, does not report to work (or would have been unable to report had he or she been scheduled) if not reporting results from:

(i) A PLHCP's written recommendation not to work, or

(ii) A railroad's instructions not to work, if the injury or illness is otherwise reportable; or

(2) A minimum of one calendar day if a PLHCP, for reasons associated with the employee's condition, recommends in writing that the employee take one or more days away from work, but the employee instead reports to work (or would have reported had he or she been scheduled). This paragraph is intended to take into account ''covered data'' cases and also those non-covered data cases that are independently reportable for some other reason (*e.g.*, ''medical treatment'' or ''day of restricted work activity''). The requirement to report ''a minimum of one calendar day'' is intended to give a railroad the discretion to report up to the total number of days recommended by the PLHCP.

Day of restricted work activity means a day of restricted work activity as described in paragraph (1) of this definition or, if paragraph (1) does not apply, a day of restricted work activity solely for reporting purposes as described in paragraph (2) of this definition; in both cases, the work restriction must affect one or more of the employee's routine job functions (*i.e.*, those work activities regularly performed at least once per week) or prevent the employee from working the full workday that he or she would otherwise have worked. For purposes of this definition, the count of days includes all calendar days, regardless of whether the employee would normally be scheduled to work on those days (*e.g.*, weekend days, holidays, rest days, and vacation days), and begins on the first calendar day after the railroad employee has been examined by a physician or other licensed health care professional (PLHCP) and diagnosed with a work-related injury or illness. In particular, the term means—

(1) Each calendar day that the employee, for reasons associated with his or her condition, works restricted duty (or would have worked restricted duty had he or she been scheduled) if the restriction results from:

(i) A PLHCP's written recommendation to work restricted duty, or

(ii) A railroad's instructions to work restricted duty, if the injury or illness is otherwise reportable; or

(2) A minimum of one calendar day if a PLHCP, for reasons associated with the employee's condition, recommends in writing that the employee work restricted duty for one or more days, but the employee instead works unrestricted (or would have worked unrestricted had he or she been scheduled). This paragraph is intended to take into account ''covered data'' cases and also those non-covered data cases that are independently reportable for some other reason (*e.g.*, ''medical treatment'' or ''day of restricted work activity''). The requirement to report ''a minimum of one calendar day'' is intended to give a railroad the discretion to report up to the total number of days recommended by the PLHCP.

Employee human factor includes any of the accident causes signified by the train accident cause codes listed under ''Train Operation—Human Factors'' in the current ''FRA Guide for Preparing Accidents/Incidents Reports,'' except for those train accident cause codes pertaining to non-railroad workers. For purposes of this definition ''employee'' includes the classifications of Worker on Duty—Employee, Employee not on Duty, Worker on Duty—Contractor, and Worker on Duty—Volunteer.

Establishment means a single physical location where workers report to work, where railroad business is conducted, or where services or operations are performed. Examples are: a division office, general office, repair or maintenance facility, major switching yard or terminal. For employees who are engaged in dispersed operations, such as signal or track maintenance workers, an ''establishment'' is typically a location where work assignments are initially made and oversight responsibility exists, *e.g.*, the establishment where the signal supervisor or roadmaster is located.

Event or exposure arising from the operation of a railroad includes—

(1) With respect to a person who is on property owned, leased, or maintained by the railroad, an activity of the railroad that is related to the performance of its rail transportation business or an exposure related to the activity;

(2) With respect to an employee of the railroad (whether on or off property owned, leased, or maintained by the railroad), an activity of the railroad that is related to the performance of its rail transportation business or an exposure related to the activity; and

(3) With respect to a person who is not an employee of the railroad and not on property owned, leased, or maintained by the railroad—an event or exposure directly resulting from one or more of the following railroad operations:

(i) A train accident, a train incident, or a highway-rail crossing accident or incident involving the railroad; or

(ii) A release of a hazardous material from a railcar in the possession of the railroad or of another dangerous commodity that is related to the performance of the railroad's rail transportation business.

FRA representative means the Associate Administrator for Safety, FRA; the Associate Administrator's delegate (including a qualified State inspector acting under part 212 of this chapter); the Chief Counsel, FRA; or the Chief Counsel's delegate.

General reporting criteria means the criteria listed in § 225.19(d)(1), (2), (3), (4), and (5).

Highway-rail grade crossing means a location where a public highway, road, street, or private roadway, including associated sidewalks and pathways, crosses one or more railroad tracks at grade.

Joint operations means rail operations conducted on a track used jointly or in common by two or more railroads subject to this part or operation of a train, locomotive, car, or other on-track equipment by one railroad over the track of another railroad.

Medical removal means medical removal under the medical surveillance requirements of the Occupational Safety and Health Administration standard in 29 CFR part 1910 in effect during calendar year 2002, even if the case does not meet one of the general reporting criteria.

Medical treatment means any medical care or treatment beyond ''first aid'' regardless of who provides such treatment. Medical treatment does not include diagnostic procedures, such as X-

rays and drawing blood samples. Medical treatment also does *not* include counseling.

Musculoskeletal disorder (MSD) means a disorder of the muscles, nerves, tendons, ligaments, joints, cartilage, and spinal discs. The term does not include disorders caused by slips, trips, falls, motor vehicle accidents, or other similar accidents. Examples of MSDs include: Carpal tunnel syndrome, Rotator cuff syndrome, De Quervain's disease, Trigger finger, Tarsal tunnel syndrome, Sciatica, Epicondylitis, Tendinitis, Raynaud's phenomenon, Carpet layers knee, Herniated spinal disc, and Low back pain.

Needlestick or sharps injury means a cut, laceration, puncture, or scratch from a needle or other sharp object that involves contamination with another person's blood or other potentially infectious material, even if the case does not meet one of the general reporting criteria.

New case means a case in which either the employee has not previously experienced a reported injury or illness of the same type that affects the same part of the body, or the employee previously experienced a reported injury or illness of the same type that affected the same part of the body but had recovered completely (all signs had disappeared) from the previous injury or illness and an event or exposure in the work environment caused the signs or symptoms to reappear.

Non-train incident means an event that results in a reportable casualty, but does not involve the movement of on-track equipment nor cause reportable damage above the threshold established for train accidents.

Occupational hearing loss means a diagnosis of occupational hearing loss by a physician or other licensed health care professional, where the employee's audiogram reveals a work-related Standard Threshold Shift (STS) (*i.e.*, at least a 10-decibel change in hearing threshold, relative to the baseline audiogram for that employee) in hearing in one or both ears, and the employee's total hearing level is 25 decibels or more above audiometric zero (averaged at 2000, 3000, and 4000 Hz) in the same ear(s) as the STS.

Occupational illness means any abnormal condition or disorder, as diagnosed by a physician or other licensed health care professional, of any person who falls under the definition for the classification of Worker on Duty—Employee, other than one resulting from injury, discernably caused by an environmental factor associated with the person's railroad employment, including, but not limited to, acute or chronic illnesses or diseases that may be caused by inhalation, absorption, ingestion, or direct contact.

Occupational tuberculosis means the occupational exposure of an employee to anyone with a known case of active tuberculosis if the employee subsequently develops a tuberculosis infection, as evidenced by a positive skin test or diagnosis by a physician or other licensed health care professional, even if the case does not meet one of the general reporting criteria.

Privacy concern case is any occupational injury or illness in the following list:

(1) Any injury or illness to an intimate body part or the reproductive system;

(2) An injury or illness resulting from a sexual assault;

(3) Mental illnesses;

(4) HIV infection, hepatitis, or tuberculosis;

(5) Needlestick and sharps injuries; and

(6) Other injuries or illnesses, if the employee independently and voluntarily requests in writing to the railroad reporting officer that his or her injury or illness not be posted.

Person includes all categories of entities covered under 1 U.S.C. 1, including, but not limited to, a railroad; any manager, supervisor, official, or other employee or agent of a railroad; any owner, manufacturer, lessor, or lessee of railroad equipment, track, or facilities; any passenger; any trespasser or nontrespasser; any independent contractor providing goods or services to a railroad; any volunteer providing goods or services to a railroad; and any employee of such owner, manufacturer, lessor, lessee, or independent contractor.

Qualified health care professional is a health care professional operating

within the scope of his or her license, registration, or certification. For example, an otolaryngologist is qualified to diagnose a case of noise-induced hearing loss and identify potential causal factors, but may not be qualified to diagnose a case of repetitive motion injuries. In addition to licensed physicians, the term *qualified health care professional* includes members of other occupations associated with patient care and treatment such as chiropractors, podiatrists, physician's assistants, psychologists, and dentists.

Railroad means a person providing railroad transportation.

Railroad transportation means any form of non-highway ground transportation that run on rails or electro-magnetic guideways, including commuter or other short-haul railroad passenger service in a metropolitan or suburban area, as well as any commuter railroad service that was operated by the Consolidated Rail Corporation as of January 1, 1979, and high speed ground transportation systems that connect metropolitan areas, without regard to whether they use new technologies not associated with traditional railroads. Such term does not include rapid transit operations within an urban area that are not connected to the general railroad system of transportation.

Significant change in the damage costs for reportable rail equipment accidents/incidents means at least a ten-percent variance between the damage amount reported to FRA and current cost figures.

Significant change in the number of reportable days away from work or days restricted means at least a ten-percent variance in the number of actual reportable days away from work or days restricted compared to the number of days already reported.

Significant illness means an illness involving cancer or a chronic irreversible disease such as byssinosis or silicosis, if the disease does not result in death, a day away from work, restricted work, job transfer, medical treatment, or loss of consciousness.

Significant injury means an injury involving a fractured or cracked bone or a punctured eardrum, if the injury does not result in death, a day away from work, restricted work, job transfer, medical treatment, or loss of consciousness.

Train accident means any collision, derailment, fire, explosion, act of God, or other event involving operation of railroad on-track equipment (standing or moving) that results in damages greater than the current reporting threshold to railroad on-track equipment, signals, track, track structures, and roadbed.

Train incident means any event involving the movement of on-track equipment that results in a reportable casualty but does not cause reportable damage above the current threshold established for train accidents.

Work environment is the physical location, equipment, materials processed or used, and activities of a railroad employee associated with his or her work, whether on or off the railroad's property.

Work related means related to any incident, activity, exposure, or the like occurring within the work environment.

[61 FR 30968, June 18, 1996, as amended at 61 FR 59371, Nov. 22, 1996; 61 FR 67490, Dec. 23, 1996; 68 FR 10136, Mar. 3, 2003]

§ 225.7 Public examination and use of reports.

(a) Accident/Incident reports made by railroads in compliance with these rules shall be available to the public in the manner prescribed by part 7 of this title. Accident/Incident reports may be inspected at the Office of Safety, Federal Railroad Administration, 400 Seventh Street, SW., Washington, DC 20590. Written requests for a copy of a report should be addressed to the Freedom of Information Officer, Office of Chief Counsel, FRA, 400 Seventh Street, SW., Washington, DC 20590, and be accompanied by the appropriate fee prescribed in part 7 of this title. To facilitate expedited handling, each request should be clearly marked ''Request for Accident/Incident Report.''

(b) 49 U.S.C. 20903 provides that monthly reports filed by railroads under § 225.11 may not be admitted as evidence or used for any purpose in any action for damages growing out of any matters mentioned in these monthly reports. The Employee Human Factor Attachment, Notice, and Employee

Supplement under § 225.12 are part of the reporting railroad's accident report to FRA pursuant to the 49 U.S.C. 20901 and, as such, shall not ''be admitted as evidence or used for any purpose in any suit or action for damages growing out of any matter mentioned in said report * * *.'' 49 U.S.C. 20903.

[39 FR 43224, Dec. 11, 1974, as amended at 51 FR 47019, Dec. 30, 1986; 53 FR 28601, July 28, 1988; 55 FR 37827, Sept. 13, 1990; 55 FR 52487, Dec. 21, 1990; 61 FR 30969, June 18, 1996]

§ 225.9 Telephonic reports of certain accidents/incidents and other events.

(a) *Types of accidents/incidents and other events to be reported*—(1) *Certain deaths or injuries*. Each railroad must report immediately, as prescribed in paragraphs (b) through (d) of this section, whenever it learns of the occurrence of an accident/incident arising from the operation of the railroad, or an event or exposure that may have arisen from the operation of the railroad, that results in the—

(i) Death of a rail passenger or a railroad employee;

(ii) Death of an employee of a contractor to a railroad performing work for the railroad on property owned, leased, or maintained by the contracting railroad; or

(iii) Death or injury of five or more persons.

(2) *Certain train accidents or train incidents*. Each railroad must report immediately, as prescribed in paragraphs (b) through (d) of this section, whenever it learns of the occurrence of any of the following events that arose from the operation of the railroad:

(i) A train accident that results in serious injury to two or more train crewmembers or passengers requiring their admission to a hospital;

(ii) A train accident resulting in evacuation of a passenger train;

(iii) A fatality at a highway-rail grade crossing as a result of a train accident or train incident;

(iv) A train accident resulting in damage (based on a preliminary gross estimate) of $150,000, to railroad and nonrailroad property; or

(v) A train accident resulting in damage of $25,000 or more to a passenger train, including railroad and nonrailroad property.

(3) *Train accidents on or fouling passenger service main lines*. The dispatching railroad must report immediately, as prescribed in paragraphs (b) through (d) of this section, whenever it learns of the occurrence of any train accident reportable as a rail equipment accident/incident under §§ 225.11 and 225.19(c)—

(i) That involves a collision or derailment on a main line that is used for scheduled passenger service; or

(ii) That fouls a main line used for scheduled passenger service.

(b) *Method of reporting*. (1) Telephonic reports required by this section shall be made by toll-free telephone to the National Response Center, Area Code 800–424–8802 or 800–424–0201.

(2) Through one of the same telephone numbers (800–424–0201), the National Response Center (NRC) also receives notifications of rail accidents for the National Transportation Safety Board (49 CFR part 840) and the Research and Special Programs Administration of the U.S. Department of Transportation (Hazardous Materials Regulations, 49 CFR 171.15). FRA Locomotive Safety Standards require certain locomotive accidents to be reported by telephone to the NRC at the same toll-free number (800–424–0201). 49 CFR 229.17.

(c) *Contents of report*. Each report must state the:

(1) Name of the railroad;

(2) Name, title, and telephone number of the individual making the report;

(3) Time, date, and location of the accident/incident;

(4) Circumstances of the accident/incident;

(5) Number of persons killed or injured; and

(6) Available estimates of railroad and non-railroad property damage.

(d) *Timing of report*. (1) To the extent that the necessity to report an accident/incident depends upon a determination of fact or an estimate of property damage, a report will be considered immediate if made as soon as possible following the time that the determination or estimate is made, or could reasonably have been made,

whichever comes first, taking into consideration the health and safety of those affected by the accident/incident, including actions to protect the environment.

(2) NTSB has other specific requirements regarding the timeliness of reporting. *See* 49 CFR part 840.

[68 FR 10138, Mar. 3, 2003]

§ 225.11 Reporting of accidents/incidents.

Each railroad subject to this part shall submit to FRA a monthly report of all railroad accidents/incidents described in § 225.19. The report shall be made on the forms prescribed in § 225.21 in hard copy or, alternatively, by means of magnetic media or electronic submission, as prescribed in § 225.37, and shall be submitted within 30 days after expiration of the month during which the accidents/incidents occurred. Reports shall be completed as required by the current ''FRA Guide for Preparing Accidents/Incidents Reports.'' A copy of this guide may be obtained from the Office of Safety, RRS–22, Federal Railroad Administration, 400 Seventh Street, S.W., Washington, D.C. 20590.

[61 FR 30969, June 18, 1996]

§ 225.12 Rail Equipment Accident/Incident Reports alleging employee human factor as cause; Employee Human Factor Attachment; notice to employee; employee supplement.

(a) *Rail Equipment Accident/Incident Report alleging employee human factor as cause; completion of Employee Human Factor Attachment.* If, in reporting a rail equipment accident/incident to FRA, a railroad cites an employee human factor as the primary cause or a contributing cause of the accident; then the railroad that cited such employee human factor must complete, in accordance with instructions on the form and in the current ''FRA Guide for Preparing Accident/Incident Reports,'' an Employee Human Factor Attachment form on the accident. For purposes of this section, ''employee'' is defined as a Worker on Duty—Employee, Employee not on Duty, Worker on Duty—Contractor, or Worker on Duty—Volunteer.

(b) *Notice to identified implicated employees.* Except as provided in paragraphs (e) and (f) of this section, for each employee whose act, omission, or physical condition was alleged by the railroad as the employee human factor that was the primary cause or a contributing cause of a rail equipment accident/incident and whose name was listed in the Employee Human Factor Attachment for the accident and for each such railroad employee of whose identity the railroad has actual knowledge, the alleging railroad shall—

(1) Complete part I, ''Notice to Railroad Employee Involved in Rail Equipment Accident/Incident Attributed to Employee Human Factor,'' of Form FRA F 6180.78 with information regarding the accident, in accordance with instructions on the form and in the current ''FRA Guide for Preparing Accident/Incident Reports''; and

(2) Hand deliver or send by first class mail (postage prepaid) to that employee, within 45 days after the end of the month in which the rail equipment accident/incident occurred—

(i) A copy of Form FRA F 6180.78, ''Notice to Railroad Employee Involved in Rail Equipment Accident/Incident Attributed to Employee Human Factor; Employee Statement Supplementing Railroad Accident Report,'' with part I completed as to the applicable employee and accident;

(ii) A copy of the railroad's Rail Equipment Accident/Incident Report and Employee Human Factor Attachment on the rail equipment accident/incident involved; and

(iii) If the accident was also reportable as a highway-rail grade crossing accident/incident, a copy of the railroad's Highway-Rail Grade Crossing Accident/Incident Report on that accident.

(c) *Joint operations.* If a reporting railroad makes allegations under paragraph (a) of this section concerning the employee of another railroad, the employing railroad must promptly provide the name, job title, address, and medical status of any employee reasonably identified by the alleging railroad, if requested by the alleging railroad.

(d) *Late identification.* Except as provided in paragraphs (e) and (f) of this section, if a railroad is initially unable

to identify a particular railroad employee whose act, omission, or physical condition was cited by the railroad as a primary or contributing cause of the accident, but subsequently makes such identification, the railroad shall submit a revised Employee Human Factor Attachment to FRA immediately, and shall submit the Notice described in paragraph (b) of this section to that employee within 15 days of when the revised report is to be submitted.

(e) *Deferred notification on medical grounds*. The reporting railroad has reasonable discretion to defer notification of implicated employees on medical grounds.

(f) *Implicated employees who have died by the time that the Notice is ready to be sent*. (1) If an implicated employee has died as a result of the accident, a Notice under paragraph (b) addressed to that employee must not be sent to any person.

(2) If an implicated employee has died of whatever causes by the time that the Notice is ready to be sent, no Notice addressed to that employee is required.

(g) *Employee Statement Supplementing Railroad Accident Report (Supplements or Employee Supplements)*. (1) Employee Statements Supplementing Railroad Accident Reports are voluntary, not mandatory; nonsubmission of a Supplement does not imply that the employee admits or endorses the railroad's conclusions as to cause or any other allegations.

(2) Although a Supplement is completely optional and not required, if an employee wishes to submit a Supplement and assure that, after receipt, it will be properly placed by FRA in a file with the railroad's Rail Equipment Accident/Incident Report and that it will be required to be reviewed by the railroad that issued the Notice, the Supplement must be made on part II of Form FRA F 6180.78 (entitled ''Notice to Railroad Employee Involved in Rail Equipment Accident/Incident Attributed to Employee Human Factor; Employee Statement Supplementing Railroad Accident Report''), following the instructions printed on the form. These instructions require that, within 35 days of the date that the Notice was hand delivered or sent by first class mail (postage prepaid) to the employee (except for good cause shown), the original of the Supplement be filed with FRA and a copy be hand delivered or sent by first class mail (postage prepaid) to the railroad that issued the Notice so that the railroad will have an opportunity to reassess its reports to FRA concerning the accident.

(3) Information that the employee wishes to withhold from the railroad must not be included in this Supplement. If an employee wishes to provide confidential information to FRA, the employee should not use the Supplement form (part II of Form FRA F 6180.78), but rather provide such confidential information by other means, such as a letter to the employee's collective bargaining representative, or to the Federal Railroad Administration, Office of Safety Assurance and Compliance, RRS–11, 400 Seventh Street, SW., Washington, DC 20590. The letter should include the name of the railroad making the allegations, the date and place of the accident, and the rail equipment accident/incident number.

(h) *Willful false statements; penalties*. If an employee chooses to submit a Supplement to FRA, all of the employee's assertions in the Supplement must be true and correct to the best of the employee's knowledge and belief.

(1) Under 49 U.S.C. 21301, 21302, and 21304, any person who willfully files a false Supplement with FRA is subject to a civil penalty. See appendix A to this part.

(2) Any person who knowingly and willfully files a false Supplement is subject to a $5,000 fine, or up to two years'' imprisonment, or both, under 49 U.S.C. 21311.

[55 FR 37827, Sept. 13, 1990; 55 FR 39538, Sept. 27, 1990, as amended at 61 FR 30969, 30973, June 18, 1996]

§ 225.13 Late reports.

Whenever a railroad discovers that a report of an accident/incident, through mistake or otherwise, has been improperly omitted from or improperly reported on its regular monthly accident/incident report, a report covering this accident/incident together with a letter of explanation must be submitted immediately. Whenever a railroad receives a partially or fully completed

Employee Statement Supplementing Railroad Accident Report (part II of Form FRA F 6180.78), in response to a Notice to Railroad Employee (part I of Form FRA F 6180.78) issued by the railroad and mailed or hand delivered to the employee, the railroad must promptly review that Supplement; based on that review, reassess the accuracy and validity of the railroad's Rail Equipment Accident/Incident Report and of any other reports and records required by this part concerning the same accident, including the Employee Human Factor Attachment; make all justified revisions to each of those reports and records; submit any amended reports to FRA; and submit a copy of any amended Rail Equipment Accident/Incident Report, Employee Human Factor Attachment, and Highway-Rail Grade Crossing Accident/Incident Report on the accident to the employee. A second notice under § 225.12 is not required for the employee. If an employee who was never sent a notice under § 225.12 for that accident is implicated in the revised Employee Human Factor Attachment, the railroad must follow the procedures of § 225.12(d).

[39 FR 43224, Dec. 11, 1974, as amended at 55 FR 37828, Sept. 13, 1990; 61 FR 30973, June 18, 1996]

§ 225.15 Accidents/incidents not to be reported.

A railroad need not report:

(a) Casualties which occur at highway-rail grade crossings that do not involve the presence or operation of on-track equipment, or the presence of railroad employees then engaged in the operation of a railroad;

(b) Casualties in or about living quarters not arising from the operation of a railroad;

(c) Suicides as determined by a coroner or other public authority; or

(d) Attempted suicides.

[39 FR 43224, Dec. 11, 1974, as amended at 61 FR 30973, June 18, 1996]

§ 225.17 Doubtful cases; alcohol or drug involvement.

(a) The reporting officer of a railroad will ordinarily determine the reportability or nonreportability of an accident/incident after examining all evidence available. The FRA, however, cannot delegate authority to decide matters of judgment when facts are in dispute. In all such cases the decision shall be that of the FRA.

(b) Even though there may be no witness to an accident/incident, if there is evidence indicating that a reportable accident/incident may have occurred, a report of that accident/incident must be made.

(c) All accidents/incidents reported as ''claimed but not admitted by the railroad'' are given special examination by the FRA, and further inquiry may be ordered. Accidents/incidents accepted as reportable are tabulated and included in the various statistical statements issued by the FRA. The denial of any knowledge or refusal to admit responsibility by the railroad does not exclude those accidents/incidents from monthly and annual figures. Facts stated by a railroad that tend to refute the claim of an injured person are given consideration, and when the facts seem sufficient to support the railroad's position, the case is not allocated to the reporting railroad.

(d)(1) In preparing a Rail Equipment Accident/Incident Report under this part, the railroad shall make such specific inquiry as may be reasonable under the circumstances into the possible involvement of alcohol or drug use or impairment in such accident or incident. If the railroad comes into possession of any information whatsoever, whether or not confirmed, concerning alleged alcohol or drug use or impairment by an employee who was involved in, or arguably could be said to have been involved in, the accident/incident, the railroad shall report such alleged use or impairment as provided in the current FRA Guide for Preparing Accident/Incident Reports. If the railroad is in possession of such information but does not believe that alcohol or drug impairment was the primary or contributing cause of the accident/incident, then the railroad shall include in the narrative statement of such report a brief explanation of the basis of such determination.

(2) For any train accident within the requirement for post-accident testing under § 219.201 of this title, the railroad

shall append to the Rail Equipment Accident/Incident Report any report required by § 219.209(b) (pertaining to failure to obtain samples for post-accident toxicological testing).

(3) For any train or non-train incident, the railroad shall provide any available information concerning the possible involvement of alcohol or drug use or impairment in such accident or incident.

(4) In providing information required by this paragraph, a railroad shall not disclose any information concerning use of controlled substances determined by the railroad's Medical Review Officer to have been consistent with 49 CFR 219.103.

[39 FR 43224, Dec. 11, 1974, as amended at 50 FR 31579, Aug. 2, 1985; 54 FR 53279, Dec. 27, 1989]

§ 225.19 Primary groups of accidents/incidents.

(a) For reporting purposes reportable railroad accidents/incidents are divided into three groups:

Group I—Highway-Rail Grade Crossing;
Group II—Rail Equipment;
Group III—Death, Injury and Occupational Illness.

(b) *Group I—Highway-rail grade crossing*. Each highway-rail grade crossing accident/incident must be reported to the FRA on Form FRA F 6180.57, regardless of the extent of damages or whether a casualty occurred. In addition, whenever a highway-rail grade crossing accident/incident results in damages greater than the current reporting threshold to railroad on-track equipment, signals, track, track structures, or roadbed, that accident/incident shall be reported to the FRA on Form FRA F 6180.54. For reporting purposes, damages include labor costs and all other costs to repair or replace in kind damaged on-track equipment, signals, track, track structures, or roadbed, but do not include the cost of clearing a wreck.

(c) *Group II—Rail equipment*. Rail equipment accidents/incidents are collisions, derailments, fires, explosions, acts of God, and other events involving the operation of on-track equipment (standing or moving) that result in damages higher than the current reporting threshold (*i.e.*, $6,700 for calendar years 2002 through 2005, $7,700 for calendar year 2006, $8,200 for calendar year 2007, and $8,500 for calendar year 2008) to railroad on-track equipment, signals, tracks, track structures, or roadbed, including labor costs and the costs for acquiring new equipment and material. Each rail equipment accident/incident must be reported to the FRA on Form FRA F 6180.54. If the property of more than one railroad is involved in an accident/incident, the reporting threshold is calculated by including the damages suffered by all of the railroads involved. See § 225.23, Joint Operations. The reporting threshold will be reviewed periodically, and, if necessary, will be adjusted every year.

(d) *Group III—Death, injury, or occupational illness*. Each event or exposure arising from the operation of a railroad shall be reported on Form FRA F 6180.55a if the event or exposure is a discernable cause of one or more of the following outcomes, and this outcome is a new case or a significant aggravation of a pre-existing injury or illness:

(1) Death to any person;

(2) Injury to any person that results in medical treatment;

(3) Injury to a railroad employee that results in:

(i) A day away from work;

(ii) Restricted work activity or job transfer; or

(iii) Loss of consciousness;

(4) Occupational illness of a railroad employee that results in any of the following:

(i) A day away from work;

(ii) Restricted work activity or job transfer;

(iii) Loss of consciousness; or

(iv) Medical treatment;

(5) Significant injury to or significant illness of a railroad employee diagnosed by a physician or other licensed health care professional even if it does not result in death, a day away from work, restricted work activity or job transfer, medical treatment, or loss of consciousness;

(6) Illness or injury that meets the application of any of the following specific case criteria:

(i) Needlestick or sharps injury to a railroad employee;

(ii) Medical removal of a railroad employee;

(iii) Occupational hearing loss of a railroad employee;

(iv) Occupational tuberculosis of a railroad employee; or

(v) Musculoskeletal disorder of a railroad employee if this disorder is independently reportable under one or more of the general reporting criteria.

(e) The reporting threshold is $6,700 for calendar years 2002 through 2005, $7,700 for calendar year 2006, $8,200 for calendar year 2007 and $8,500 for calendar year 2008. The procedure for determining the reporting threshold for calendar years 2006 and beyond appears as paragraphs 1–8 of appendix B to part 225.

(Secs. 11144 and 11145, Subtitle IV of Title 49 (49 U.S.C. 11144 and 11145); secs. 1 and 6, Accident Reports Act (45 U.S.C. 431 and 437); sec. 6(e) and (f), Department of Transportation Act (49 U.S.C. 1655(e) and (f)); sec. 1.49(g) and (m), regulations of the Office of the Secretary of Transportation (49 CFR 1.49(g) and (m))

[39 FR 43224, Dec. 11, 1974, as amended at 41 FR 50691, Nov. 17, 1976; 42 FR 1221, Jan. 6, 1977; 47 FR 56358, Dec. 16, 1982; 51 FR 47019, Dec. 30, 1986; 53 FR 48548, Dec. 1, 1988; 55 FR 52847, Dec. 21, 1990; 61 FR 30969, 30973, June 18, 1996; 61 FR 60634, Nov. 29, 1996; 61 FR 67490, Dec. 23, 1996; 63 FR 63676, Dec. 2, 1997; 63 FR 71791, Dec. 30, 1998; 64 FR 69195, Dec. 10, 1999; 65 FR 69886, Nov. 21, 2000; 66 FR 66348, Dec. 26, 2001; 67 FR 79536, Dec. 30, 2002; 68 FR 10138, Mar. 3, 2003; 70 FR 75417, Dec. 20, 2005; 72 FR 1186, Jan. 10, 2007; 72 FR 73661, Dec. 28, 2007]

§ 225.21 Forms.

The following forms and copies of the FRA Guide for Preparing Accident/Incident Reports may be obtained from the Office of Safety, FRA, 400 Seventh Street, SW., Washington, DC 20590.

(a) *Form FRA F 6180.54—Rail Equipment Accident/Incident Report.* Form FRA F 6180.54 shall be used to report each reportable rail equipment accident/incident which occurred during the preceding month.

(b) *Form FRA F 6180.55—Railroad Injury and Illness Summary.* Form FRA F 6180.55 must be filed each month, even though no reportable accident/incident occurred during the month covered. Each report must include an oath or verification, made by the proper officer of the reporting railroad, as provided for attestation on the form. If no reportable accident/incident occurred during the month, that fact must be stated on this form. All railroads subject to this part, shall show on this form the total number of freight train miles, passenger train miles, yard switching train miles, and other train miles run during the month.

(c) *Form FRA 6180.55a—Railroad Injury and Illness (Continuation Sheet).* Form FRA 6180.55a shall be used to report all reportable fatalities, injuries and occupational illnesses that occurred during the preceding month.

(d) *Form FRA 6180.56—Annual Railroad Report of Manhours by State.* Form FRA 6180.56 shall be submitted as part of the monthly Railroad Injury and Illness Summary (Form FRA F 6180.55) for the month of December of each year.

(e) *Form FRA F 6180.57—Highway-Rail Grade Crossing Accident/Incident Report.* Form FRA F 6180.57 shall be used to report each highway-rail grade crossing accident/incident which occurred during the preceding month.

(f) *Form FRA F 6180.81—Employee Human Factor Attachment.* Form FRA F 6180.81 shall be used by railroads, as a supplement to the Rail Equipment Accident/Incident Report (Form FRA F 6180.54), in reporting rail equipment accidents/incidents that they attribute to an employee human factor. This form shall be completed in accordance with instructions printed on the form and in the current ''FRA Guide for Preparing Accident/Incident Reports.'' The form shall be attached to the Rail Equipment Accident/Incident Report and shall be submitted within 30 days after expiration of the month in which the accident/incident occurred.

(g) *Form FRA F 6180.78—Notice to Railroad Employee Involved in Rail Equipment Accident/Incident Attributed to Employee Human Factor; Employee Statement Supplementing Railroad Accident Report.* When a railroad alleges, in the Employee Human Factor Attachment to a Rail Equipment Accident/Incident Report, that the act, omission, or physical condition of a specific employee was a primary or contributing cause of the rail equipment accident/incident, the railroad shall complete part I of Form FRA F 6180.78 to notify each such employee identified that the railroad

has made such allegation and that the employee has the right to submit a statement to FRA. The railroad shall then submit the entire form, parts I and II, to the employee. The Employee Statement Supplementing Railroad Accident Report (Employee Supplement) is completely at the option of the employee; however, if the employee desires to make a statement about the accident that will become part of the railroad's Rail Equipment Accident/Incident Report, the employee shall complete the Employee Supplement form (part II of Form FRA F 6180.78) and shall then submit the original of the entire form, parts I and II, and any attachments, to FRA and submit a copy of the same to the railroad that issued the Notice in part I.

(h) *Form FRA F 6180.98—Railroad Employee Injury and/or Illness Record.* Form FRA F 6180.98 or an alternative railroad-designed record shall be used by the railroads to record all reportable and accountable injuries and illnesses to railroad employees for each establishment. This record shall be completed and maintained in accordance with the requirements set forth in § 225.25.

(i) *Form FRA F 6180.97—Initial Rail Equipment Accident/Incident Record.* Form FRA F 6180.97 or an alternative railroad-designed record shall be used by the railroads to record all reportable and accountable rail equipment accidents/incidents for each establishment. This record shall be completed and maintained in accordance with the requirements set forth in § 225.25.

(j) Form FRA 6180.107—*Alternative Record for Illnesses Claimed To Be Work-Related.* (1) Form FRA F 6180.107 shall be used by a railroad to record each illness claimed to be work-related that is reported to the railroad—

(i) For which there is insufficient information to determine whether the illness is work-related;

(ii) For which the railroad has made a preliminary determination that the illness is not work-related; or

(iii) For which the railroad has made a final determination that the illness is not work-related.

(2) For any case determined to be reportable, the designation ''illness claimed to be work-related'' shall be removed, and the record shall be transferred to the reporting officer for retention and reporting in the normal manner.

(3) In the event the narrative block (similar to Form FRA F 6180.98, block 39) indicates that the case is not reportable, the explanation contained on that block shall record the reasons the railroad determined that the case is not reportable, making reference to the most authoritative information relied upon.

(4) Although the Form FRA F 6180.107 may not include all supporting documentation, such as medical records, the Form FRA F 6180.107 shall note the name, title, and address of the custodian of those documents and where the supporting documents are located so that they are readily accessible to FRA upon request.

[39 FR 43224, Dec. 11, 1974, as amended at 42 FR 1221, Jan. 6, 1977; 49 FR 48939, Dec. 17, 1984; 55 FR 37828, Sept. 13, 1990; 61 FR 30969, 30973, June 18, 1996; 68 FR 10138, Mar. 3, 2003]

§ 225.23 Joint operations.

(a) Any reportable death, injury, or illness of an employee arising from an accident/incident involving joint operations must be reported on Form FRA F 6180.55a by the employing railroad.

(b) In all cases involving joint operations, each railroad must report on Form FRA F 6180.55a the casualties to all persons on its train or other on-track equipment. Casualties to railroad employees must be reported by the employing railroad regardless of whether the employees were on or off duty. Casualties to all other persons not on trains or on-track equipment must be reported on Form FRA F 6180.55a by the railroad whose train or equipment is involved. Any person found unconscious or dead, if such condition arose from the operation of a railroad, on or adjacent to the premises or right-of-way of the railroad having track maintenance responsibility must be reported by that railroad on Form FRA F 6180.55a.

(c) In rail equipment accident/incident cases involving joint operations, the railroad responsible for carrying out repairs to, and maintenance of, the track on which the accident/incident

occurred, and any other railroad directly involved in the accident/incident, each must report the accident/incident on Form FRA F 6180.54.

[39 FR 43224, Dec. 11, 1974, as amended at 42 FR 1221, Jan. 6, 1977; 68 FR 10138, Mar. 3, 2003]

§ 225.25 Recordkeeping.

(a) Each railroad shall maintain either the Railroad Employee Injury and/or Illness Record (Form FRA F 6180.98) or an alternative railroad-designed record as described in paragraph (b) of this section of all reportable and accountable injuries and illnesses of its employees that arise from the operation of the railroad for each railroad establishment where such employees report to work, including, but not limited to, an operating division, general office, and major installation such as a locomotive or car repair or construction facility.

(b) The alternative railroad-designed record may be used in lieu of the Railroad Employee Injury and/or Illness Record (Form FRA F 6180.98) described in paragraph (a) of this section. Any such alternative record shall contain all of the information required on the Railroad Employee Injury and/or Illness Record. Although this information may be displayed in a different order from that on the Railroad Employee Injury and/or Illness Record, the order of the information shall be consistent from one such record to another such record. The order chosen by the railroad shall be consistent for each of the railroad''s reporting establishments. Railroads may list additional information on the alternative record beyond the information required on the Railroad Employee Injury and/or Illness Record. The alternative record shall contain, at a minimum, the following information:

(1) Name of railroad;

(2) Case/incident number;

(3) Full name of railroad employee;

(4) Date of birth of railroad employee;

(5) Gender of railroad employee;

(6) Employee identification number or, in the alternative, Social Security Number of railroad employee;

(7) Date the railroad employee was hired;

(8) Home address of railroad employee; include the street address, city, State, ZIP code, and home telephone number with area code;

(9) Name of facility where railroad employee normally reports to work;

(10) Address of facility where railroad employee normally reports to work; include the street address, city, State, and ZIP code;

(11) Job title of railroad employee;

(12) Department assigned;

(13) Specific site where accident/incident/exposure occurred; include the city, county, State, and ZIP code;

(14) Date and time of occurrence; military time or AM/PM;

(15) Time employee's shift began; military time or AM/PM;

(16) Whether employee was on premises when injury, illness, or condition occurred;

(17) Whether employee was on or off duty;

(18) Date and time when employee notified company personnel of condition; military time or AM/PM;

(19) Name and title of railroad official notified;

(20) Description of the general activity this employee was engaged in prior to the injury/illness/condition;

(21) Description of all factors associated with the case that are pertinent to an understanding of how it occurred. Include a discussion of the sequence of events leading up to it; and the tools, machinery, processes, material, environmental conditions, etc., involved;

(22) Description, in detail, of the injury/illness/condition that the employee sustained, including the body parts affected. If a recurrence, list the date of the last occurrence;

(23) Identification of all persons and organizations used to evaluate or treat the condition, or both. Include the facility, provider and complete address;

(24) Description of all procedures, medications, therapy, etc., used or recommended for the treatment of the condition.

(25) Extent and outcome of injury or illness to show the following as applicable:

(i) Fatality—enter date of death;

(ii) Restricted work; number of days; beginning date;

(iii) Occupational illness; date of initial diagnosis;

(iv) Instructions to obtain prescription medication, or receipt of prescription medication;

(v) If one or more days away from work, provide the number of days away and the beginning date;

(vi) Medical treatment beyond ''first aid'';

(vii) Hospitalization for treatment as an inpatient;

(viii) Multiple treatments or therapy sessions;

(ix) Loss of consciousness;

(x) Transfer to another job or termination of employment;

(xi) Significant injury or illness of a railroad employee;

(xii) Needlestick or sharps injury to a railroad employee, medical removal of a railroad employee, occupational hearing loss of a railroad employee, occupational tuberculosis of a railroad employee, or musculoskeletal disorder of a railroad employee which musculoskeletal disorder is reportable under one or more of the general reporting criteria.

(26) Each railroad shall indicate if the Railroad Injury and Illness Summary (Continuation Sheet) (FRA Form F 6180.55a) has been filed with FRA for the injury or illness. If FRA Form F 6180.55a was not filed with FRA, then the railroad shall provide an explanation of the basis for its decision.

(27) The reporting railroad shall indicate if the injured or ill railroad employee was provided an opportunity to review his or her file; and

(28) The reporting railroad shall identify the preparer's name; title; telephone number with area code; and the date the log entry was completed.

(c) Each railroad shall provide the employee, upon request, a copy of either the completed Railroad Employee Injury and/or Illness Record (Form FRA F 6180.98) or the alternative railroad-designed record as described in paragraphs (a) and (b) of this section as well as a copy of forms or reports required to be maintained or filed under this part pertaining to that employee's own work-related injury or illness.

(d) Each railroad shall maintain the Initial Rail Equipment Accident/Incident Record (Form FRA F 6180.97) or an alternative railroad-designed record as described in paragraph (e) of this section of reportable and accountable collisions, derailments, fires, explosions, acts of God, or other events involving the operation of railroad on-track equipment, signals, track, or track equipment (standing or moving) that result in damages to railroad on-track equipment, signals, tracks, track structures, or roadbed, including labor costs and all other costs for repairs or replacement in kind for each railroad establishment where workers report to work, including, but not limited to, an operating division, general office, and major installation such as a locomotive or car repair or construction facility.

(e) The alternative railroad-designed record may be used in lieu of the Initial Rail Equipment Accident/Incident Record (Form FRA F 6180.97). Any such alternative record shall contain all of the information required on the Initial Rail Equipment Accident/Incident Record. Although this information may be displayed in a different order from that on the Initial Rail Equipment Accident/Incident Record, the order of the information shall be consistent from one such record to another such record. The order chosen by the railroad shall be consistent for each of the railroad's reporting establishments. Railroads may list additional information in the alternative record beyond the information required on the Initial Rail Equipment Accident/Incident Record. The alternative record shall contain, at a minimum, the following information:

(1) Date and time of accident;

(2) Reporting railroad, and accident/incident number;

(3) Other railroad, if applicable, and other railroad's accident/incident number;

(4) Railroad responsible for track maintenance, and that railroad's incident number;

(5) Type of accident/incident (derailment, collision, etc.);

(6) Number of cars carrying hazardous materials that derailed or were damaged; and number of cars carrying hazardous materials that released product;

(7) Division;

(8) County and nearest city or town;
(9) State;
(10) Milepost (to the nearest tenth);
(11) Specific site;
(12) Speed (indicate if actual or estimate);
(13) Train number or job number;
(14) Type of equipment (freight, passenger, yard switching, etc.);
(15) Type of track (main, yard, siding, industry);
(16) Total number of locomotives in train;
(17) Total number of locomotives that derailed;
(18) Total number of cars in train;
(19) Total number of cars that derailed;
(20) Total amount of damage in dollars to equipment based on computations as described in the ''FRA Guide for Preparing Accidents/Incidents Reports'';
(21) Total amount of damage in dollars to track, signal, way and structures based on computations as described in the ''FRA Guide for Preparing Accidents/Incidents Reports'';
(22) Primary cause;
(23) Contributing cause;
(24) Persons injured, persons killed, and employees with an occupational illness, broken down into the following classifications: worker on duty—employee; employee not on duty; passenger on train; nontrespasser—on railroad property; trespasser; worker on duty—contractor; contractor—other; worker on duty—volunteer; volunteer—other; and nontrespasser-off railroad property;
(25) Narrative description of the accident;
(26) Whether the accident/incident was reported to FRA;
(27) Preparer's name, title, telephone number with area code, and signature; and
(28) Date the report was completed.

(f) Each railroad shall enter each reportable and accountable injury and illness and each reportable and accountable rail equipment accident/incident on the appropriate record, as required by paragraphs (a) through (e) of this section, as early as practicable but no later than seven working days after receiving information or acquiring knowledge that an injury or illness or rail equipment accident/incident has occurred.

(g) The records required under paragraphs (a) through (e) of this section may be maintained at the local establishment or, alternatively, at a centralized location. If the records are maintained at a centralized location, but not through electronic means, then a paper copy of the records that is current within 35 days of the month to which it applies shall be available for that establishment. If the records are maintained at a centralized location through electronic means, then the records for that establishment shall be available for review in a hard copy format within four business hours of FRA's request. FRA recognizes that circumstances outside the railroad's control may preclude it from fulfilling the four-business-hour time limit. In these circumstances, FRA will not assess a monetary penalty against the railroad for its failure to provide the requested documentation provided the railroad made a reasonable effort to correct the problem.

(h) Except as provided in paragraph(h)(15) of this section, a listing of all injuries and occupational illnesses reported to FRA as having occurred at an establishment shall be posted in a conspicuous location at that establishment, within 30 days after the expiration of the month during which the injuries and illnesses occurred, if the establishment has been in continual operation for a minimum of 90 calendar days. If the establishment has not been in continual operation for a minimum of 90 calendar days, the listing of all injuries and occupational illnesses reported to FRA as having occurred at the establishment shall be posted, within 30 days after the expiration of the month during which the injuries and illnesses occurred, in a conspicuous location at the next higher organizational level establishment, such as one of the following: an operating division headquarters; a major classification yard or terminal headquarters; a major equipment maintenance or repair installation, *e.g.*, a locomotive or rail car repair or construction facility; a railroad signal and maintenance-of-way division headquarters; or a central location where track or signal maintenance

employees are assigned as a headquarters or receive work assignments. These examples include facilities that are generally major facilities of a permanent nature where the railroad generally posts or disseminates company informational notices and policies, *e.g.*, the policy statement in the internal control plan required by § 225.33 concerning harassment and intimidation. At a minimum, ''establishment'' posting is required and shall include locations where a railroad reasonably expects its employees to report during a 12-month period and to have the opportunity to observe the posted list containing any reportable injuries or illnesses they have suffered during the applicable period. This listing shall be posted and shall remain continuously displayed for the next twelve consecutive months. Incidents reported for employees at that establishment shall be displayed in date sequence. The listing shall contain, at a minimum, the information specified in paragraphs (h)(1) through (14) of this section.

(1) Name and address of the establishment;

(2) Calendar year of the cases being displayed;

(3) Incident number used to report case;

(4) Date of the injury or illness;

(5) Location of incident;

(6) Regular job title of employee injured or ill;

(7) Description of the injury or condition;

(8) Number of days employee absent from work at time of posting;

(9) Number of days of work restriction for employee at time of posting;

(10) If fatality—enter date of death;

(11) Annual average number of railroad employees reporting to this establishment;

(12) Preparer's name, title, telephone number with area code, and signature (or, in lieu of signing each establishment's list of reportable injuries and illnesses, the railroad's preparer of this monthly list may sign a cover sheet or memorandum which contains a list of each railroad establishment for which a monthly list of reportable injuries and illnesses has been prepared. This cover memorandum shall be signed by the preparer and shall have attached to it a duplicate copy of each establishment's list of monthly reportable injuries and illnesses. The preparer of the monthly lists of reportable injuries and illnesses shall mail or send by facsimile each establishment's list to the establishment in the time frame prescribed in paragraph (h) of this section.); and

(13) Date the record was completed.

(14) When there are no reportable injuries or occupational illnesses associated with an establishment for that month, the listing shall make reference to this fact.

(15) The railroad is permitted not to post information on an occupational injury or illness that is a privacy concern case.

(i) *Claimed Occupational Illnesses.* (1) Each railroad shall maintain either the Form FRA F 6180.107, to the extent that the information is reasonably available, or an alternate railroad-designed record containing the same information as called for on the Form FRA F 6180.107, to the extent that the information is reasonably available, for each illness claimed to be work-related—

(i) For which there is insufficient information to determine whether the illness is work-related;

(ii) For which the railroad has made a preliminary determination that the illness is not work-related; or

(iii) For which the railroad has made a final determination that the illness is not work-related.

(2) For any case determined to be reportable, the designation ''illness claimed to be work-related'' shall be removed, and the record shall be transferred to the reporting officer for retention and reporting in the normal manner.

(3) In the event the narrative block (similar to Form FRA F 6180.98, block 39) indicates that the case is not reportable, the explanation contained on that block shall record the reasons the railroad determined that the case is not reportable, making reference to the most authoritative information relied upon.

(4) In the event the railroad must amend the record with new or additional information, the railroad shall have up until December 1 of the next

calendar year for reporting accidents/incidents to make the update.

(5) Although the Alternative Record for Illnesses Claimed to be Work-Related (or the alternate railroad-designed form) may not include all supporting documentation, such as medical records, the alternative record shall note the custodian of those documents and where the supporting documents are located so that they are readily accessible to FRA upon request.

[61 FR 30970, June 18, 1996, as amended at 61 FR 59371, Nov. 22, 1996; 61 FR 67491, Dec. 23, 1996; 68 FR 10139, Mar. 3, 2003]

§ 225.27 Retention of records.

(a) Each railroad shall retain the Railroad Employee Injury and/or Illness Record and the Monthly List of Injuries and Illnesses required by § 225.25 for at least five years after the end of the calendar year to which they relate. Each railroad shall retain the Initial Rail Equipment Accident/Incident Record required by § 225.25 for at least two years after the end of the calendar year to which it relates. Each railroad must retain the Employee Human Factor Attachments required by § 225.12, the written notices to employees required by § 225.12, and the Employee Statements Supplementing Railroad Accident Reports described in § 225.12(g) that have been received by the railroad for at least 2 years after the end of the calendar year to which they relate.

(b) Each railroad must retain a duplicate of each form it submits to FRA under § 225.21, for at least 2 years after the calendar year to which it relates.

[39 FR 43224, Dec. 11, 1974, as amended at 55 FR 37828, Sept. 13, 1990; 61 FR 30971, June 18, 1996; 61 FR 67491, Dec. 23, 1996]

§ 225.29 Penalties.

Any person (an entity of any type covered under 1 U.S.C. 1, including but not limited to the following: a railroad; a manager, supervisor, official, or other employee or agent of a railroad; any owner, manufacturer, lessor, or lessee of railroad equipment, track, or facilities; any independent contractor providing goods or services to a railroad; and any employee of such owner, manufacturer, lessor, lessee, or independent contractor) who violates any requirement of this part or causes the violation of any such requirement is subject to a civil penalty of at least $550 and not more than $16,000 per violation, except that: Penalties may be assessed against individuals only for willful violations, and where a grossly negligent violation or a pattern of repeated violations has created an imminent hazard of death or injury to persons, or has caused death or injury, a penalty not to exceed $27,000 per violation may be assessed. Each day a violation continues shall constitute a separate offense. See appendix A to this part for a statement of agency civil penalty policy. A person may also be subject to the criminal penalties provided for in 49 U.S.C. 21311.

[53 FR 28601, July 28, 1988, as amended at 53 FR 52931, Dec. 29, 1988; 61 FR 30971, June 18, 1996; 63 FR 11622, Mar. 10, 1998; 69 FR 30594, May 28, 2004; 72 FR 51197, Sept. 6, 2007]

§ 225.31 Investigations.

(a) It is the policy of the FRA to investigate rail transportation accidents/incidents which result in the death of a railroad employee or the injury of five or more persons. Other accidents/incidents are investigated when it appears that an investigation would substantially serve to promote railroad safety.

(b) FRA representatives are authorized to investigate accidents/incidents and have been issued credentials authorizing them to inspect railroad records and properties. They are authorized to obtain all relevant information concerning accidents/incidents under investigation, to make inquiries of persons having knowledge of the facts, conduct interviews and inquiries, and attend as an observer, hearings conducted by railroads. When necessary to carry out an investigation, the FRA may authorize the issuance of subpoenas to require the production of records and the giving of testimony.

(c) Whenever necessary, the FRA will schedule a public hearing before an authorized hearing officer, in which event testimony will be taken under oath, a record made, and opportunity provided to question witnesses.

(d) When necessary in the conduct of an investigation, the Federal Railroad Administrator may require autopsies

and other tests of the remains of railroad employees who die as a result of an accident/incident.

(e) Information obtained through FRA accident investigations may be published in public reports or used for other purposes FRA deems to be appropriate.

(f) Section 20903 of title 49 of the United States Code provides that no part of a report of an accident investigation under section 20902 of title 49 of the United States Code may be admitted as evidence or used for any purpose in any suit or action for damages growing out of any matter mentioned in the accident investigation report.

[39 FR 43224, Dec. 11, 1974, as amended at 61 FR 30971, June 18, 1996]

§ 225.33 Internal Control Plans.

(a) Each railroad shall adopt and comply with a written Internal Control Plan that shall be maintained at the office where the railroad's reporting officer conducts his or her official business. Each railroad shall amend its Internal Control Plan, as necessary, to reflect any significant changes to the railroad's internal reporting procedures. The Internal Control Plan shall be designed to maintain absolute accuracy and shall include, at a minimum, each of the following components:

(1) A policy statement declaring the railroad's commitment to complete and accurate reporting of all accidents, incidents, injuries, and occupational illnesses arising from the operation of the railroad, to full compliance with the letter and spirit of FRA's accident reporting regulations, and to the principle, in absolute terms, that harassment or intimidation of any person that is calculated to discourage or prevent such person from receiving proper medical treatment or from reporting such accident, incident, injury or illness will not be permitted or tolerated and will result in some stated disciplinary action against any employee, supervisor, manager, or officer of the railroad committing such harassment or intimidation.

(2) The dissemination of the policy statement; complaint procedures. Each railroad shall provide to all employees, supervisory personnel, and management the policy statement described in paragraph (a)(1). Each railroad shall have procedures to process complaints from any person about the policy stated in paragraph (a)(1) being violated, and to impose the appropriate prescribed disciplinary actions on each employee, supervisor, manager, or officer of the railroad found to have violated the policy. These procedures shall be disclosed to railroad employees, supervisors, managers, and officers. The railroad shall provide ''whistle blower'' protection to any person subject to this policy, and such policy shall be disclosed to all railroad employees, supervisors and management.

(3) Copies of internal forms and/or a description of the internal computer reporting system used for the collection and internal recording of accident and incident information.

(4) A description of the internal procedures used by the railroad for the processing of forms and/or computerized data regarding accident and incident information.

(5) A description of the internal review procedures applicable to accident and incident information collected, and reports prepared by, the railroad's safety, claims, medical and/or other departments engaged in collecting and reporting accident and incident information.

(6) A description of the internal procedures used for collecting cost data and compiling costs with respect to accident and incident information.

(7) A description of applicable internal procedures for ensuring adequate communication between the railroad department responsible for submitting accident and incident reports to FRA and any other department within the railroad responsible for collecting, receiving, processing and reporting accidents and incidents.

(8) A statement of applicable procedures providing for the updating of accident and incident information prior to reporting to FRA and a statement of applicable procedures providing for the amendment of accident and incident information as specified in the ''FRA Guide for Preparing Accidents/Incidents Reports.''

(9) A statement that specifies the name and title of the railroad officer

responsible for auditing the performance of the reporting function; a statement of the frequency (not less than once per calendar year) with which audits are conducted; and identification of the site where the most recent audit report may be found for inspection and photocopying.

(10)(i) A brief description of the railroad organization, including identification of:

(A) All components that regularly come into possession of information pertinent to the preparation of reports under this part (*e.g.*, medical, claims, and legal departments; operating, mechanical, and track and structures departments; payroll, accounting, and personnel departments);

(B) The title of each railroad reporting officer;

(C) The title of each manager of such components, by component; and

(D) All officers to whom managers of such components are responsible, by component.

(ii) A current organization chart satisfies paragraphs (a)(10)(i) (B), (C), and (D) of this section.

(11) In the case of the Form FRA F 6180.107 or the alternate railroad-designed form, a statement that specifies the name, title, and address of the custodian of these records, all supporting documentation, such as medical records, and where the documents are located.

(b) [Reserved]

[61 FR 30972, June 18, 1996, as amended at 61 FR 59371, Nov. 22, 1996; 61 FR 67491, Dec. 23, 1996; 68 FR 10139, Mar. 3, 2003]

§ 225.35 Access to records and reports.

(a) Each railroad subject to this part shall have at least one location, and shall identify each location, where any representative of the Federal Railroad Administration or of a State agency participating in investigative and surveillance activities under part 212 of this chapter or any other authorized representative, has centralized *access* to a copy of any record and report required under this part, for examination and photocopying in a reasonable manner during normal business hours.

(b) Each railroad subject to this part shall also provide to any representative of the Federal Railroad Administration or of a State agency participating in investigative or and surveillance activities under part 212 of this chapter or any other authorized representative access to relevant medical and claims records for examination and photocopying in a reasonable manner during normal business hours. Such representatives shall display proper credentials when requested. Each railroad shall identify the locations where a copy of any record and report required under this part is accessible for inspection and photocopying by maintaining a list of such establishment locations at the office where the railroad's reporting officer conducts his or her official business. A copy of any record and report required under this part shall be accessible within four business hours after the request. The Form FRA F 6180.107 or the alternate railroad-designed form need not be provided at any railroad establishment within 4 hours of a request. Rather, the Form FRA F 6180.107 or the alternate railroad-designed form must be provided upon request, within five business days, and may be kept at a central location, in either paper or electronic format. FRA will not assess a monetary penalty against the railroad for its failure to provide the requested documentation when circumstances outside the railroad's control preclude it from fulfilling the four-business-hour time limit and the railroad has made a reasonable effort to correct the problem. Should a railroad assert a legal privilege with respect to certain claims and medical records, failure to provide FRA access to such records would not constitute a violation of this section. FRA retains the right to issue a subpoena to obtain such records under 49 U.S.C. §§ 20107 and 20902 and §§ 209.7(a) and 225.31(b) of this title, and the railroad may contest that subpoena.

[61 FR 30972, June 18, 1996, as amended at 61 FR 59371, Nov. 22, 1996; 68 FR 10139, Mar. 3, 2003]

§ 225.37 Magnetic media transfer and electronic submission.

(a) A railroad has the option of submitting the following reports, updates, and amendments by way of magnetic media (computer diskette or magnetic

tape), or by means of electronic submission over telephone lines or other means:

(1) The Rail Equipment Accident/Incident Report (Form FRA F 6180.54);

(2) The Railroad Injury and Illness Summary (Form FRA F 6180.55);

(3) The Railroad Injury and Illness Summary (Continuation Sheet) (Form FRA F 6180.55a);

(4) The Highway-Rail Grade Crossing Accident/Incident Report (Form FRA F 6180.57); and

(5) The Batch Control Form (Form FRA F 6180.99).

(b) Each railroad utilizing the magnetic media option shall submit to FRA the following:

(1) The computer diskette or magnetic tape;

(2) The Batch Control Form (Form FRA F 6180.99); and

(3) A notarized hard copy of the Railroad Injury and Illness Summary (Form FRA F 6180.55), signed by the railroad's reporting officer.

(c) Each railroad utilizing the electronic submission option shall submit to FRA the following:

(1) the Batch Control Form (Form FRA F 6180.99) which is submitted to an FRA-designated computer; and

(2) a notarized hard copy of the Railroad Injury and Illness Summary (Form FRA F 6180.55), signed by the railroad's reporting officer.

(d) Each railroad employing either the magnetic media or electronic submission option, shall submit its monthly reporting data for the reports identified in paragraph (a) of this section in a year-to-date file format as described in the ''FRA Guide for Preparing Accidents/Incidents Reports.''

(e) In addition to fulfilling the requirements stated in paragraph (b) through (d) of this section, each railroad initially utilizing either the magnetic media or electronic submission option, shall submit the hard copy report(s) for each accident/incident it reports by such means. FRA will continually review the railroad''s submitted hard copy reports against the data it has submitted electronically, or by means of magnetic media. Once the magnetic media or electronic submission is in *total* agreement with the submitted hard copies of the reports for *three* consecutive reporting months, FRA will notify the railroad, in writing, that submission of the hard copy reports, except for the notarized Railroad Injury and Illness Summary, is no longer required.

[61 FR 30972, June 18, 1996]

§ 225.39 FRA policy on covered data.

FRA will not include covered data (as defined in § 225.5) in its periodic summaries of data on the number of occupational injuries and illnesses.

[68 FR 10139, Mar. 3, 2003]

APPENDIX A TO PART 225—SCHEDULE OF CIVIL PENALTIES [1]

Section (including computer code, if applicable)	Violation	Willful violation
225.9 Telephonic reports of certain accidents/incidents	$1,000	$2,000
225.11 Reports of accidents/ incidents	2,500	5,000
225.12(a):		
Failure to file Railroad Employee Human Factor Attachment properly.		
(1) Employee identified	2,500	5,000
(2) No employee identified	1,000	2,000
225.12(b):		
(1) Failure to notify employee properly	2,500	5,000
(2) Notification of employee not involved in accident	2,500	5,000
225.12(c):		
Failure of employing railroad to provide requested information properly	1,000	2,000
225.12(d):		
(1) Failure to revise report when identity becomes known	2,500	5,000
(2) Failure to notify after late identification	2,500	5,000
225.12(f)(1):		
Submission of notice if employee dies as result of the reported accident	2,500	5,000
225.12(g):		
Willfully false accident statement by employee	.....	5,000
225.13 Late reports	2,500	5,000
225.17(d) Alcohol or drug involvement	2,500	5,000

Section (including computer code, if applicable)	Violation	Willful violation
225.23 Joint operations	(1)	(1)
225.25 Recordkeeping	2,500	5,000
225.27 Retention of records	1,000	2,000
225.33:		
(1) Failure to adopt the Internal Control Plan	2,500	5,000
(2) Inaccurate reporting due to failure to comply with the Internal Control Plan	2,500	5,000
(3) Failure to comply with the intimidation/harassment policy in the Internal Control Plan	2,500	5,000
225.35 Access to records and reports	2,500	5,000

[1] A penalty may be assessed against an individual only for a willful violation. The Administrator reserves the right to assess a penalty of up to $27,000 for any violation where circumstances warrant. See 49 CFR part 209, appendix A. A failure to comply with § 225.23 constitutes a violation of § 225.11. For purposes of §§ 225.25 and 225.27 of this part, each of the following constitutes a single act of noncompliance: (1) a missing or incomplete log entry for a particular employee's injury or illness; or (2) a missing or incomplete log record for a particular rail equipment accident or incident. Each day a violation continues is a separate offense.

[61 FR 30973, June 18, 1996, as amended at 63 FR 11622, Mar. 10, 1998; 69 FR 30594, May 28, 2004]

APPENDIX B TO PART 225—PROCEDURE FOR DETERMINING REPORTING THRESHOLD

1. Wage data used in the calculation are collected from railroads by the Surface Transportation Board (STB) on Form A—STB Wage Statistics. Rail equipment data from the U.S. Department of Labor, Bureau of Labor Statistics (BLS), LABSTAT Series reports are used in the calculation. The equation used to adjust the reporting threshold has two components: (a) The average hourly earnings of certain railroad maintenance employees as reported to the STB by the Class I railroads and Amtrak; and (b) an overall rail equipment cost index determined by the BLS. The wage component is weighted by 40% and the equipment component by 60%.

2. For the wage component, the average of the data from Form A—STB Wage Statistics for Group No. 300 (Maintenance of Way and Structures) and Group No. 400 (Maintenance of Equipment and Stores) employees is used.

3. For the equipment component, LABSTAT Series Report, Producer Price Index (PPI) Series WPU 144 for Railroad Equipment is used.

4. In the month of October, second-quarter wage data are obtained from the STB. For equipment costs, the corresponding BLS railroad equipment indices for the second quarter are obtained. As the equipment index is reported monthly rather than quarterly, the average for the months of April, May and June is used for the threshold calculation.

5. The wage data are reported in terms of dollars earned per hour, while the equipment cost data are indexed to a base year of 1982.

6. The procedure for adjusting the reporting threshold is shown in the formula below. The wage component appears as a fractional change relative to the prior year, while the equipment component is a difference of two percentages which must be divided by 100 to present it in a consistent fractional form. After performing the calculation, the result is rounded to the nearest $100.

7. The weightings result from using STB wage data and BLS equipment cost data to produce a reasonable estimation of the reporting threshold that was calculated using the threshold formula in effect immediately before calendar year 2006, a formula that assumed damage repair costs, at levels at or near the threshold, were split approximately evenly between labor and materials.

8. Formula:

New Threshold = Prior Threshold × [1 + 0.4(Wnew—Wprior)/Wprior + 0.6(Enew − Eprior)/100]

Where:

Wnew = New average hourly wage rate ($).
Wprior = Prior average hourly wage rate ($).
Enew = New equipment average PPI value.
Eprior = Prior equipment average PPI value.

[70 FR 75417, Dec. 20, 2005]

PART 227—OCCUPATIONAL NOISE EXPOSURE

Subpart A—General

Sec.
227.1 Purpose and scope.
227.3 Application.
227.5 Definitions.
227.7 Preemptive effect.
227.9 Penalties.
227.11 Responsibility for compliance.
227.13 Waivers.
227.15 Information collection.

Subpart B—Occupational Noise Exposure for Railroad Operating Employees

227.101 Scope and applicability.
227.103 Noise monitoring program.
227.105 Protection of employees.
227.107 Hearing conservation program.
227.109 Audiometric testing program.

227.111 Audiometric test requirements.
227.113 Noise operational controls.
227.115 Hearing protectors.
227.117 Hearing protector attenuation.
227.119 Training program.
227.121 Recordkeeping.

APPENDIX A TO PART 227—NOISE EXPOSURE COMPUTATION
APPENDIX B TO PART 227—METHODS FOR ESTIMATING THE ADEQUACY OF HEARING PROTECTOR ATTENUATION
APPENDIX C TO PART 227—AUDIOMETRIC BASELINE REVISION
APPENDIX D TO PART 227—AUDIOMETRIC TEST ROOMS
APPENDIX E TO PART 227—USE OF INSERT EARPHONES FOR AUDIOMETRIC TESTING
APPENDIX F TO PART 227—CALCULATIONS AND APPLICATION OF AGE CORRECTIONS TO AUDIOGRAMS
APPENDIX G TO PART 227—SCHEDULE OF CIVIL PENALTIES

AUTHORITY: 49 U.S.C. 20103, 20103 (note), 20701–20702; 49 CFR 1.49.

SOURCE: 71 FR 63123, Oct. 27, 2006, unless otherwise noted.

Subpart A—General

§ 227.1 Purpose and scope.

(a) The purpose of this part is to protect the occupational health and safety of employees whose predominant noise exposure occurs in the locomotive cab.

(b) This part prescribes minimum Federal health and safety noise standards for locomotive cab occupants. This part does not restrict a railroad or railroad contractor from adopting and enforcing additional or more stringent requirements.

§ 227.3 Application.

(a) Except as provided in paragraph (b) of this section, this part applies to all railroads and contractors to railroads.

(b) This part does not apply to—

(1) A railroad that operates only on track inside an installation that is not part of the general railroad system of transportation;

(2) A rapid transit operation in an urban area that is not connected to the general railroad system of transportation;

(3) A rapid transit operation in an urban area that is connected to the general system and operates under a shared use waiver;

(4) A railroad that operates tourist, scenic, historic, or excursion operations, whether on or off the general railroad system of transportation; or

(5) Foreign railroad operations that meet the following conditions: Employees of the foreign railroad have a primary reporting point outside of the U.S. but are operating trains or conducting switching operations in the U.S.; and the government of that foreign railroad has implemented requirements for hearing conservation for railroad employees; the foreign railroad undertakes to comply with those requirements while operating within the U.S.; and FRA's Associate Administrator for Safety determines that the foreign requirements are consistent with the purpose and scope of this part. A ''foreign railroad'' refers to a railroad that is incorporated in a place outside the U.S. and is operated out of a foreign country but operates for some distance in the U.S.

§ 227.5 Definitions.

As used in this part—

Action level means an eight-hour time-weighted-average sound level (TWA) of 85 dB(A), or, equivalently, a dose of 50 percent, integrating all sound levels from 80 dB(A) to 140 dB(A).

Administrator means the Administrator of the Federal Railroad Administration or the Administrator's delegate.

Artifact means any signal received or recorded by a noise measuring instrument that is not related to occupational noise exposure and may adversely impact the accuracy of the occupational noise measurement.

Audiogram means a record of audiometric testing, showing the thresholds of hearing sensitivity measured at discrete frequencies, as well as other recordkeeping information.

Audiologist means a professional, who provides comprehensive diagnostic and treatment/rehabilitative services for auditory, vestibular, and related impairments and who

(1) Has a Master's degree or doctoral degree in audiology and

(2) Is licensed as an audiologist by a State; or in the case of an individual who furnishes services in a State which

does not license audiologists, has successfully completed 350 clock hours of supervised clinical practicum (or is in the process of accumulating such supervised clinical experience), performed not less than 9 months of supervised full-time audiology services after obtaining a master's or doctoral degree in audiology or a related field, and successfully completed a national examination in audiology approved by the Secretary of the U.S. Department of Health and Human Services.

Audiometry means the act or process of measuring hearing sensitivity at discrete frequencies. Audiometry can also be referred to as audiometric testing.

Baseline audiogram means an audiogram, recorded in accordance with § 227.109, against which subsequent audiograms are compared to determine the extent of change of hearing level.

Class I, Class II, and Class III railroads have the meaning assigned by the regulations of the Surface Transportation Board (49 CFR part 120; General Instructions 1–1).

Continuous noise means variations in sound level that involve maxima at intervals of 1 second or less.

Decibel (dB) means a unit of measurement of sound pressure levels.

dB(A) means the sound pressure level in decibels measured on the A-weighted scale.

Employee means any individual who is engaged or compensated by a railroad or by a contractor to a railroad to perform any of the duties defined in this part.

Exchange rate means the change in sound level, in decibels, which would require halving or doubling of the allowable exposure time to maintain the same noise dose. For purposes of this part, the exchange rate is 5 decibels.

FRA means the Federal Railroad Administration.

Hearing protector means any device or material, which is capable of being worn on the head, covering the ear canal or inserted in the ear canal; is designed wholly or in part to reduce the level of sound entering the ear; and has a scientifically accepted indicator of its noise reduction value.

Hertz (Hz) means a unit of measurement of frequency numerically equal to cycles per second.

Medical pathology means a condition or disease affecting the ear which is medically or surgically treatable.

Noise operational controls means a method used to reduce noise exposure, other than hearing protectors or equipment modifications, by reducing the time a person is exposed to excessive noise.

Occasional service means service of not more than a total of 20 days in a calendar year.

Otolaryngologist means a physician specializing in diagnosis and treatment of disorders of the ear, nose, and throat.

Periodic audiogram is a record of follow-up audiometric testing conducted at regular intervals after the baseline audiometric test.

Person means an entity of any type covered under 1 U.S.C. 1, including but not limited to the following: a railroad; a manager, supervisor, official, or other employee or agent of a railroad; an owner, manufacturer, lessor, or lessee of railroad equipment, track, or facilities; an independent contractor providing goods or services to a railroad; and any employee of such owner, manufacturer, lessor, lessee, or independent contractor.

Professional Supervisor of the Audiometric Monitoring Program in a hearing conservation program means an audiologist, otolaryngologist, or a physician with experience and expertise in hearing and hearing loss.

Qualified Technician is a person who is certified by the Council for Accreditation in Occupational Hearing Conservation or equivalent organization; or who has satisfactorily demonstrated competence in administering audiometric examinations, obtaining valid audiograms, and properly using, maintaining, and checking calibration and proper functioning of the audiometers used; and is responsible to the Professional Supervisor of the Audiometric Testing Program.

Railroad means any form of non-highway ground transportation that runs on rails or electromagnetic guide-ways and any entity providing such transportation, including:

(1) Commuter or other short-haul railroad passenger service in a metropolitan or suburban area and commuter railroad service that was operated by the Consolidated Rail Corporation on January 1, 1979; and

(2) High speed ground transportation systems that connect metropolitan areas, without regard to whether those systems use new technologies not associated with traditional railroads. The term ''railroad'' is also intended to mean a person that provides transportation by railroad, whether directly or by contracting out operation of the railroad to another person. The term does not include rapid transit operations in an urban area that are not connected to the general railroad system of transportation.

Representative personal sampling means measurement of an employee's noise exposure that is representative of the exposures of other employees who operate similar equipment under similar conditions.

Sound level or Sound pressure level means ten times the common logarithm of the ratio of the square of the measured A-weighted sound pressure to the square of the standard reference pressure of twenty micropascals, measured in decibels. For purposes of this regulation, SLOW time response, in accordance with ANSI S1.43–1997 (Reaffirmed 2002), ''Specifications for Integrating-Averaging Sound Level Meters,'' is required. The Director of the Federal Register approves this incorporation by reference of this standard in this section in accordance with 5 U.S.C. 552(a) and 1 CFR part 51. You may obtain a copy of the incorporated standard from the American National Standards Institute at 1819 L Street, NW., Washington, DC 20036 or *http://www.ansi.org*. You may inspect a copy of the incorporated standard at the Federal Railroad Administration, Docket Room, 1120 Vermont Ave., NW., Suite 700, Washington, DC 20005, or at the National Archives and Records Administration (NARA). For information on the availability of this material at NARA, call 202–741–6030, or go to *http://www.archives.gov/federal_register/code_of_federal_regulations/ibr_locations.html*.

Standard threshold shift (STS) means a change in hearing sensitivity for the worse, relative to the baseline audiogram, or relative to the most recent revised baseline (where one has been established), of an average of 10 dB or more at 2000, 3000, and 4000 Hz in either ear.

Time-weighted-average eight-hour (or 8-hour TWA) means the sound level, which, if constant over 8 hours, would result in the same noise dose as is measured. For purposes of this part, the exchange rate is 5 decibels.

Tourist, scenic, historic, or excursion operations means railroad operations that carry passengers, often using antiquated equipment, with the conveyance of the passengers to a particular destination not being the principal purpose.

§ 227.7 Preemptive effect.

Under 49 U.S.C. 20106, issuance of these regulations preempts any State law, regulation, or order covering the same subject matter, except an additional or more stringent law, regulation, or order that is necessary to eliminate or reduce an essentially local safety hazard; is not incompatible with a law, regulation, or order of the United States Government; and does not impose an unreasonable burden on interstate commerce.

§ 227.9 Penalties.

(a) Any person who violates any requirement of this part or causes the violation of any such requirement is subject to a civil penalty of at least $550 and not more than $11,000 per violation, except that: penalties may be assessed against individuals only for willful violations, and, where a grossly negligent violation or a pattern of repeated violations has created an imminent hazard of death or injury to persons, or has caused death or injury, a penalty not to exceed $27,000 per violation may be assessed. Each day a violation continues shall constitute a separate offense. See appendix H to this part for a statement of agency civil penalty policy.

(b) Any person who knowingly and willfully falsifies a record or report required by this part may be subject to

criminal penalties under 49 U.S.C. 21311.

§ 227.11 Responsibility for compliance.

Although the duties imposed by this part are generally stated in terms of the duty of a railroad, any person, including a contractor for a railroad, who performs any function covered by this part must perform that function in accordance with this part.

§ 227.13 Waivers.

(a) A person subject to a requirement of this part may petition the Administrator for a waiver of compliance with such requirement. The filing of such a petition does not affect that person's responsibility for compliance with that requirement while the petition is being considered.

(b) Each petition for waiver under this section must be filed in the manner and contain the information required by part 211 of this chapter.

(c) If the Administrator finds that a waiver of compliance is in the public interest and is consistent with railroad safety, the Administrator may grant the waiver subject to any conditions the Administrator deems necessary.

§ 227.15 Information collection.

(a) The information collection requirements of this part were reviewed by the Office of Management and Budget pursuant to the Paperwork Reduction Act of 1980 (44 U.S.C. 3501 et seq.) and are assigned OMB control number 2130–NEW.

(b) The information collection requirements are found in the following sections: §§ 227.13, 227.103, 227.107, 227.109, 227.111, 227.117, 227.119, and 227.121.

Subpart B—Occupational Noise Exposure for Railroad Operating Employees.

§ 227.101 Scope and applicability.

(a) This subpart shall apply to the noise-related working conditions of—

(1) Any person who regularly performs service subject to the provisions of the hours of service laws governing ''train employees'' (see 49 U.S.C. 21101(5) and 21103), but, subject to a railroad's election in paragraph (a)(3) of this section, does not apply to:

(i) Employees who move locomotives only within the confines of locomotive repair or servicing areas, as provided in §§ 218.5 and 218.29(a) of this chapter, or

(ii) Employees who move a locomotive or group of locomotives for distances of less than 100 feet and this incidental movement of a locomotive or locomotives is for inspection or maintenance purposes, or

(iii) Contractors who operate historic equipment in occasional service, provided that the contractors have been provided with hearing protectors and, where necessary, are required to use the hearing protectors while operating the historic equipment;

(2) Any direct supervisor of the persons described in paragraph (a)(1) of this section whose duties require frequent work in the locomotive cab; and

(3) At the election of the railroad, any other person (including a person excluded by paragraph (a)(1) of this section) whose duties require frequent work in the locomotive cab and whose primary noise exposure is reasonably expected to be experienced in the cab, if the position occupied by such person is designated in writing by the railroad, as required by § 227.121(d).

(b) Occupational noise exposure and hearing conservation for employees not covered by this subpart is governed by the appropriate occupational noise exposure regulation of the U.S. Department of Labor, Occupational Safety and Health Administration located at 29 CFR 1910.95.

§ 227.103 Noise monitoring program.

(a) *Schedule.* A railroad shall develop and implement a noise monitoring program to determine whether any employee covered by the scope of this subpart may be exposed to noise that may equal or exceed an 8-hour TWA of 85 dB(A), in accordance with the following schedule:

(1) Class 1, passenger, and commuter railroads no later than February 26, 2008.

(2) Railroads with 400,000 or more annual employee hours that are not Class 1, passenger, or commuter railroads no later than August 26, 2008.

(3) Railroads with fewer than 400,000 annual employee hours no later than August 26, 2009.

(b) *Sampling strategy*. (1) In its monitoring program, the railroad shall use a sampling strategy that is designed to identify employees for inclusion in the hearing conservation program and to enable the proper selection of hearing protection.

(2) Where circumstances such as high worker mobility, significant variations in sound level, or a significant component of impulse noise make area monitoring generally inappropriate, the railroad shall use representative personal sampling to comply with the monitoring requirements of this section, unless the railroad can show that area sampling produces equivalent results.

(c) *Noise measurements*. (1) All continuous, intermittent, and impulse sound levels from 80 decibels to 140 decibels shall be integrated into the noise measurements.

(2) Noise measurements shall be made under typical operating conditions using:

(i) A sound level meter conforming, at a minimum, to the requirements of ANSI S1.4–1983 (Reaffirmed 2001) (incorporated by reference, see § 227.103(h)), Type 2, and set to an A-weighted SLOW response;

(ii) An integrated sound level meter conforming, at a minimum, to the requirements of ANSI S1.43–1997 (Reaffirmed 2002) (incorporated by reference, see § 227.103(h)), Type 2, and set to an A-weighted slow response ; or

(iii) A noise dosimeter conforming, at a minimum, to the requirements of ANSI S1.25–1991 (Reaffirmed 2002) (incorporated by reference, see § 227.103(h)) and set to an A-weighted SLOW response.

(3) All instruments used to measure employee noise exposure shall be calibrated to ensure accurate measurements.

(d) The railroad shall repeat noise monitoring, consistent with the requirements of this section, whenever a change in operations, process, equipment, or controls increases noise exposures to the extent that:

(1) Additional employees may be exposed at or above the action level; or

(2) The attenuation provided by hearing protectors being used by employees may be inadequate to meet the requirements of § 227.103.

(e) In administering the monitoring program, the railroad shall take into consideration the identification of work environments where the use of hearing protectors may be omitted.

(f) *Observation of monitoring*. The railroad shall provide affected employees or their representatives with an opportunity to observe any noise dose measurements conducted pursuant to this section.

(g) *Reporting of monitoring results*. (1) The railroad shall notify each monitored employee of the results of the monitoring.

(2) The railroad shall post the monitoring results at the appropriate crew origination point for a minimum of 30 days. The posting should include sufficient information to permit other crews to understand the meaning of the results in the context of the operations monitored.

(h) *Incorporation by reference*. The materials listed in this section are incorporated by reference in the corresponding sections noted. These incorporations by reference were approved by the Director of the Federal Register in accordance with 5 U.S.C. 552(a) and 1 CFR part 51. You may obtain a copy of the incorporated materials from the American National Standards Institute at 1819 L Street, NW., Washington, DC 20036 or *http://www.ansi.org*. You may inspect a copy of the incorporated standards at the Federal Railroad Administration, Docket Room, 1120 Vermont Ave., NW., Suite 700, Washington, DC 20005, or at the National Archives and Records Administration (NARA). For information on the availability of this material at NARA, call 202–741–6030, or go to *http://www.archives.gov/federal_register/code_of_federal_regulations/ibr_locations.html*.

(1) ANSI S1.4–1983 (Reaffirmed 2001), Specification for Sound Level Meters, incorporation by reference (IBR) approved for § 227.103(c)(2)(i).

(2) ANSI S1.43–1997 (Reaffirmed 2002), Specifications for Integrating-Averaging Sound Level Meters, IBR approved for § 227.103(c)(2)(ii).

(3) ANSI S1.25–1991 (Reaffirmed 2002), Specification for Personal Noise Dosimeters, IBR approved for § 227.103(c)(2)(iii).

§ 227.105 Protection of employees.

(a) A railroad shall provide appropriate protection for its employees who are exposed to noise, as measured according to § 227.103, that exceeds the limits specified in appendix A of this part.

(b) In assessing whether exposures exceed 115 dB(A), as set forth in paragraph (a) of this section and appendix A to this part, the apparent source of the noise exposures shall be observed and documented and measurement artifacts may be removed.

(c) Except as set forth in paragraph (d) of this section, exposure to continuous noise shall not exceed 115dB(A).

(d) Exposures to continuous noise greater than 115 dB(A) and equal to or less than 120 dB(A) are permissible, provided that the total daily duration does not exceed 5 seconds.

§ 227.107 Hearing conservation program.

(a) Consistent with the requirements of the noise monitoring program required by § 227.103, the railroad shall administer a continuing, effective hearing conservation program, as set forth in §§ 227.109 through 227.121, for all employees exposed to noise at or above the action level.

(b) For purposes of the hearing conservation program, employee noise exposure shall be computed in accordance with the tables in appendix A of this part, and without regard to any attenuation provided by the use of hearing protectors.

§ 227.109 Audiometric testing program.

(a) Each railroad shall establish and maintain an audiometric testing program as set forth in this section and include employees who are required to be included in a hearing conservation program pursuant to § 227.107.

(b) *Cost*. The audiometric tests shall be provided at no cost to employees.

(c) *Tests*. Audiometric tests shall be performed by:

(1) An audiologist, otolaryngologist, or other physician who has experience and expertise in hearing and hearing loss; or

(2) A qualified technician.

(d) [Reserved]

(e) *Baseline audiogram*. This paragraph (e) applies to employees who are required by § 227.107 to be included in a hearing conservation program.

(1) *New employees*. (i) Except as provided in paragraph (e)(1)(ii), for employees hired after February 26, 2007, the railroad shall establish a valid baseline audiogram within 6 months of the new employee's first tour of duty.

(ii) Where mobile test vans are used to meet the requirement in paragraph (e)(1)(i), the railroad shall establish a valid baseline audiogram within one year of the new employee's first tour of duty.

(2) *Existing employees*. (i) For all employees without a baseline audiogram as of February 26, 2007, Class 1, passenger, and commuter railroads, and railroads with 400,000 or more annual employee hours shall establish a valid baseline audiogram by February 26, 2009; and railroads with less than 400,000 annual employee hours shall establish a valid baseline audiogram by February 26, 2010.

(ii) If an employee has had a baseline audiogram as of February 26, 2007, and it was obtained under conditions that satisfy the requirements found in 29 CFR 1910.95(h), the railroad must use that baseline audiogram.

(iii) If the employee has had a baseline audiogram as of February 26, 2007, and it was obtained under conditions that satisfy the requirements in 29 CFR 1910.95(h)(1), but not the requirements found in 29 CFR 1910.95(h)(2) through (5), the railroad may elect to use that baseline audiogram provided that the Professional Supervisor of the Audiometric Monitoring Program makes a reasonable determination that the baseline audiogram is valid and is clinically consistent with other materials in the employee's medical file.

(3) Testing to establish a baseline audiogram shall be preceded by at least 14 hours without exposure to occupational noise in excess of the action level. Hearing protectors may be used as a substitute for the requirement that baseline audiograms be preceded

by 14 hours without exposure to occupational noise.

(4) The railroad shall notify its employees of the need to avoid high levels of non-occupational noise exposure during the 14-hour period immediately preceding the audiometric examination.

(f) *Periodic audiogram.* (1) The railroad shall offer an audiometric test to each employee included in the hearing conservation program at least once each calendar year. The interval between the date offered to any employee for a test in a calendar year and the date offered in the subsequent calendar year shall be no more than 450 days and no less than 280 days.

(2) The railroad shall require each employee included in the hearing conservation program to take an audiometric test at least once every 1095 days.

(g) *Evaluation of audiogram.* (1) Each employee's periodic audiogram shall be compared to that employee's baseline audiogram to determine if the audiogram is valid and to determine if a standard threshold shift has occurred. This comparison may be done by a qualified technician.

(2) If the periodic audiogram demonstrates a standard threshold shift, a railroad may obtain a retest within 90 days. The railroad may consider the results of the retest as the periodic audiogram.

(3) The audiologist, otolaryngologist, or physician shall review problem audiograms and shall determine whether there is a need for further evaluation. A railroad shall provide all of the following information to the person performing this review:

(i) The baseline audiogram of the employee to be evaluated;

(ii) The most recent audiogram of the employee to be evaluated;

(iii) Measurements of background sound pressure levels in the audiometric test room as required in appendix D of this part: Audiometric Test Rooms; and

(iv) Records of audiometer calibrations required by § 227.111.

(h) *Follow-up procedures.* (1) If a comparison of the periodic audiogram to the baseline audiogram indicates that a standard threshold shift has occurred, the railroad shall inform the employee in writing within 30 days of the determination.

(2) Unless a physician or audiologist determines that the standard threshold shift is not work-related or aggravated by occupational noise exposure, the railroad shall ensure that the following steps are taken:

(i) Employees not using hearing protectors shall be fitted with hearing protectors, shall be trained in their use and care, and shall be required to use them.

(ii) Employees already provided with hearing protectors shall be refitted, shall be retrained in the use of hearing protectors offering greater attenuation, if necessary, and shall be required to use them.

(iii) If subsequent audiometric testing is necessary or if the railroad suspects that a medical pathology of the ear is caused or aggravated by the wearing of hearing protectors, the railroad shall refer the employee for a clinical audiological evaluation or an otological examination.

(iv) If the railroad suspects that a medical pathology of the ear unrelated to the use of hearing protectors is present, the railroad shall inform the employee of the need for an otological examination.

(3) If subsequent audiometric testing of an employee, whose exposure to noise is less than an 8-hour TWA of 90 dB, indicates that a standard threshold shift is not persistent, the railroad shall inform the employee of the new audiometric interpretation and may discontinue the required use of hearing protectors for that employee.

(i) *Revised baseline.* A railroad shall use the following methods for revising baseline audiograms:

(1) Periodic audiograms from audiometric tests conducted through February 26, 2009, may be substituted for the baseline measurement by the Professional Supervisor of the Audiometric Monitoring Program who is evaluating the audiogram if:

(i) The standard threshold shift revealed by the audiogram is persistent; or

(ii) The hearing threshold shown in the periodic audiogram indicates significant improvement over the baseline audiogram.

(2) Baseline audiograms from audiometric tests conducted after February 26, 2009, shall be revised in accordance with the method specified in appendix C of this part: Audiometric Baseline Revision.

(j) *Standard threshold shift.* In determining whether a standard threshold shift has occurred, allowance may be made for the contribution of aging (presbycusis) to the change in hearing level by correcting the annual audiogram according to the procedure described in appendix F of this part: Calculation and Application of Age Correction to Audiograms.

§ 227.111 Audiometric test requirements.

(a) Audiometric tests shall be pure tone, air conduction, hearing threshold examinations, with test frequencies including 500, 1000, 2000, 3000, 4000, 6000, and 8000 Hz. Tests at each frequency shall be taken separately for each ear.

(b) Audiometric tests shall be conducted with audiometers (including microprocessor audiometers) that meet the specifications of and are maintained and used in accordance with ANSI S3.6–2004 ''Specification for Audiometers.'' The Director of the Federal Register approves the incorporation by reference of this standard in accordance with 5 U.S.C. 552(a) and 1 CFR part 51. You may obtain a copy of the incorporated standard from the American National Standards Institute at 1819 L Street, NW., Washington, DC 20036 or *http://www.ansi.org*. You may inspect a copy of the incorporated standard at the Federal Railroad Administration, Docket Room, 1120 Vermont Ave., NW., Suite 700, Washington, DC 20005, or at the National Archives and Records Administration (NARA). For more information on the availability of this material at NARA, call 202–741–6030, or go to *http://www.archives.gov/federal_register/code_of_federal_regulations/ibr_locations.html*.

(1) Pulsed-tone audiometers should be used with the following on and off times: F–J and J–K shall each have values of 225 ± 35 milliseconds (ms).

(2) Use of insert earphones shall be consistent with the requirements listed in appendix E of this part: Use of Insert Earphones for Audiometric Testing.

(c) Audiometric examinations shall be administered in a room meeting the requirements listed in appendix D of this part: Audiometric Test Rooms.

(d) *Audiometer calibration.*

(1) The functional operation of the audiometer shall be checked before each day's use by testing a person with known, stable hearing thresholds or by appropriate calibration device, and by listening to the audiometer's output to make sure that the output is free from distorted or unwanted sounds. Deviations of 10 decibels or greater require an acoustic calibration.

(2) Audiometer calibration shall be checked acoustically at least annually according to the procedures described in ANSI S3.6–2004. Frequencies below 500 Hz and above 8000 Hz may be omitted from this check. The audiometer must meet the sound pressure accuracy requirements of section 7.2 of ANSI S3.6–2004 of 3 dB at any test frequency between 500 and 5000 Hz and 5 dB at any test frequency 6000 Hz and higher for the specific type of transducer used. For air-conduction supra-aural earphones, the specifications in Table 6 of ANSI S3.6–2004 shall apply. For air-conduction insert earphones, the specifications in Table 7 of ANSI S3.6–2004 shall apply. Audiometers that do not meet these requirements must undergo an exhaustive calibration.

(3) Exhaustive Calibration. An exhaustive calibration shall be performed in accordance with ANSI S3.6–2004, according to the following schedule:

(i) At least once every two years on audiometers not used in mobile test vans. Test frequencies below 500 Hz and above 6000 Hz may be omitted from this calibration.

(ii) At least annually on audiometers used in mobile test vans.

§ 227.113 Noise operational controls.

(a) Railroads may use noise operational controls at any sound level to reduce exposures to levels below those required by Table A–1 of appendix A of this part.

(b) Railroads are encouraged to use noise operational controls when employees are exposed to sound exceeding an 8-hour TWA of 90 dB(A).

§ 227.115 Hearing protectors.

(a) *General requirements for hearing protectors.*

(1) The railroad shall provide hearing protectors to employees at no cost to the employee.

(2) The railroad shall replace hearing protectors as necessary.

(3) When offering hearing protectors, a railroad shall consider an employee's ability to understand and respond to voice radio communications and audible warnings.

(4) The railroad shall give employees the opportunity to select their hearing protectors from a variety of suitable hearing protectors. The selection shall include devices with a range of attenuation levels.

(5) The railroad shall provide training in the use and care of all hearing protectors provided to employees.

(6) The railroad shall ensure proper initial fitting and supervise the correct use of all hearing protectors.

(b) *Availability of hearing protectors.* A railroad shall make hearing protectors available to all employees exposed to sound levels that meet or exceed the action level.

(c) *Required use at action level.* A railroad shall require the use of hearing protectors when an employee is exposed to sound levels that meet or exceed the action level, and the employee has:

(1) Not yet had a baseline audiogram established pursuant to § 227.109; or

(2) Experienced a standard threshold shift and is required to use hearing protectors under § 227.109(h).

(d) *Required use for TWA of 90 dB(A).* The railroad shall require the use of hearing protectors when an employee is exposed to sound levels equivalent to an 8-hour TWA of 90 dB(A) or greater. The hearing protectors should be used to reduce sound levels to within those levels required by appendix A of this part.

§ 227.117 Hearing protector attenuation.

(a) A railroad shall evaluate hearing protector attenuation for the specific noise environments in which the protector will be used. The railroad shall use one of the evaluation methods described in appendix B of this part; ''Methods for Estimating the Adequacy of Hearing Protector Attenuation.''

(b) Hearing protectors shall attenuate employee exposure to an 8-hour TWA of 90 decibels or lower, as required by § 227.115.

(c) For employees who have experienced a standard threshold shift, hearing protectors must attenuate employee exposure to an 8-hour time-weighted average of 85 decibels or lower.

(d) The adequacy of hearing protector attenuation shall be re-evaluated whenever employee noise exposures increase to the extent that the hearing protectors provided may no longer provide adequate attenuation. A railroad shall provide more effective hearing protectors where necessary.

§ 227.119 Training program.

(a) The railroad shall institute an occupational noise and hearing conservation training program for all employees included in the hearing conservation program.

(1) The railroad shall offer the training program to each employee included in the hearing conservation program at least once each calendar year. The interval between the date offered to any employee for the training in a calendar year and the date offered in the subsequent calendar year shall be no more than 450 days and no less than 280 days.

(2) The railroad shall require each employee included in the hearing conservation program to complete the training at least once every 1095 days.

(b) The railroad shall provide the training required by paragraph (a) of this section in accordance with the following:

(1) For employees hired after February 26, 2007, within six months of the employee's first tour of duty in a position identified within the scope of this part.

(2) For employees hired on or before February 26, 2007, by Class 1, passenger,

and commuter railroads, and railroads with 400,000 or more annual employee hours, by no later than February 26, 2009;

(3) For employees hired on or before February 26, 2007, by railroads with fewer than 400,000 annual employee hours, by no later than February 26, 2010.

(c) The training program shall include and the training materials shall reflect, at a minimum, information on all of the following:

(1) The effects of noise on hearing;

(2) The purpose of hearing protectors;

(3) The advantages, disadvantages, and attenuation of various types of hearing protectors;

(4) Instructions on selection, fitting, use, and care of hearing protectors;

(5) The purpose of audiometric testing, and an explanation of the test procedures;

(6) An explanation of noise operational controls, where used;

(7) General information concerning the expected range of workplace noise exposure levels associated with major categories of railroad equipment and operations (*e.g.*, switching and road assignments, hump yards near retarders, etc.) and appropriate reference to requirements of the railroad concerning use of hearing protectors;

(8) The purpose of noise monitoring and a general description of monitoring procedures;

(9) The availability of a copy of this part, an explanation of the requirements of this part as they affect the responsibilities of employees, and employees' rights to access records under this part;

(10) How to determine what can trigger an excessive noise report, pursuant to § 229.121(b); and

(11) How to file an excessive noise report, pursuant to § 229.121(b).

§ 227.121 Recordkeeping.

(a) *General requirements.*—(1) *Availability of records.* Each railroad required to maintain and retain records under this part shall:

(i) Make all records available for inspection and copying/photocopying to representatives of the FRA, upon request;

(ii) Make an employee's records available for inspection and copying/photocopying to that employee, former employee, or such person's representative upon written authorization by such employee;

(iii) Make exposure measurement records for a given run or yard available for inspection and copying/photocopying to all employees who were present in the locomotive cab during the given run and/or who work in the same yard; and

(iv) Make exposure measurement records for specific locations available to regional or national labor representatives, upon request. These reports shall not contain identifying information of an employee unless an employee authorizes the release of such information in writing.

(2) *Electronic records.* All records required by this part may be kept in electronic form by the railroad. A railroad may maintain and transfer records through electronic transmission, storage, and retrieval provided that:

(i) The electronic system be designed so that the integrity of each record is maintained through appropriate levels of security such as recognition of an electronic signature, or other means, which uniquely identify the initiating person as the author of that record. No two persons shall have the same electronic identity;

(ii) The electronic system shall ensure that each record cannot be modified in any way, or replaced, once the record is transmitted and stored;

(iii) Any amendment to a record shall be electronically stored apart from the record which it amends. Each amendment to a record shall be uniquely identified as to the person making the amendment;

(iv) The electronic system shall provide for the maintenance of records as originally submitted without corruption or loss of data; and

(v) Paper copies of electronic records and amendments to those records, that may be necessary to document compliance with this part shall be made available for inspection and copying/photocopying by representatives of the FRA.

(3) *Transfer of records.* If a railroad ceases to do business, it shall transfer

to the successor employer all records required to be maintained under this subpart, and the successor employer shall retain them for the remainder of the period prescribed in this part.

(b) *Exposure measurements records.* The railroad shall:

(1) Maintain an accurate record of all employee exposure measurements required by § 227.103; and

(2) Retain these records for the duration of the covered employee's employment plus thirty years.

(c) *Audiometric test records.* The railroad shall:

(1) Maintain employee audiometric test records required by § 227.109, including:

(i) The name and job classification of the employee;

(ii) The date of the audiogram;

(iii) The examiner's name;

(iv) The date of the last acoustic or exhaustive calibration of the audiometer;

(v) Accurate records of the measurements of the background sound pressure levels in audiometric test rooms;

(vi) The model and serial number of the audiometer used for testing; and

(2) Retain the records required by § 227.107 for the duration of the covered employee's employment plus thirty years.

(d) *Positions and persons designated records.* The railroad shall:

(1) Maintain a record of all positions or persons or both designated by the railroad to be placed in a Hearing Conservation Program pursuant to § 227.107; and

(2) Retain these records for the duration of the designation.

(e) *Training program materials records.* The railroad shall:

(1) Maintain copies of all training program materials used to comply with § 227.119(c) and a record of employees trained; and

(2) Retain these copies and records for three years.

(f) *Standard threshold shift records.* The railroad shall:

(1) Maintain a record of all employees who have been found to have experienced a standard threshold shift within the prior calendar year and include all of the following information for each employee on the record:

(i) Date of the employee's baseline audiogram;

(ii) Date of the employee's most recent audiogram;

(iii) Date of the establishment of a standard threshold shift;

(iv) The employee's job code; and

(v) An indication of how many standard threshold shifts the employee has experienced in the past, if any; and

(2) Retain these records for five years.

APPENDIX A TO PART 227—NOISE EXPOSURE COMPUTATION

This appendix is mandatory.

I. COMPUTATION OF EMPLOYEE NOISE EXPOSURE

A. Noise dose is computed using Table A–1 as follows:

1. When the sound level, L, is constant over the entire work day, the noise dose, D, in percent, is given by: D = 100 C/T, where C is the total length of the work day, in hours, and T is the duration permitted corresponding to the measured sound level, L, as given in Table A–1.

2. When the work day noise exposure is composed of two or more periods of noise at different levels, the total noise dose over the work day is given by:

D = 100 (C1/T1 + C2/T2 + . . . + Cn/Tn), where Cn indicates the total time of exposure at a specific noise level, and Tn indicates the duration permitted for that level as given by Table A–1.

B. The eight-hour TWA in dB may be computed from the dose, in percent, by means of the formula: TWA = 16.61 log10 (D/100) + 90. For an eight-hour work day with the noise level constant over the entire day, the TWA is equal to the measured sound level.

C. Exposure to impulsive or impact noise should not exceed 140 dB peak sound pressure level.

D. Any time that an employee spends deadheading shall be included in the calculation of the noise dose.

E. A table relating dose and TWA is given in Section II of this Appendix.

TABLE A–1[1]

A-weighted sound level, L (decibel)	Duration permitted T (hour)
80	32
81	27.9
82	24.3
83	21.1
84	18.4
85	16
86	13.9

TABLE A–1[1]—Continued

A-weighted sound level, L (decibel)	Duration permitted T (hour)
87	12.1
88	10.6
89	9.2
90	8
91	7.0
92	6.1
93	5.3
94	4.6
95	4
96	3.5
97	3.0
98	2.6
99	2.3
100	2
101	1.7
102	1.5
103	1.3
104	1.1
105	1
106	0.87
107	0.76
108	0.66
109	0.57
110	0.5
111	0.44
112	0.38
113	0.33
114	0.29
115	0.25
116	*0.22*
117	*0.19*
118	*0.16*
119	*0.14*
120	*0.125*
121	*0.11*
122	*0.095*
123	*0.082*
124	*0.072*
125	*0.063*
126	*0.054*
127	*0.047*
128	*0.041*
129	*0.036*
130	*0.031*
140	*0.078*

[1] Numbers above 115 dB(A) are italicized to indicate that they are noise levels that are not permitted. The italicized numbers are included only because they are sometimes necessary for the computation of noise dose.

In the above table the duration permitted, T, is computed by

$$T = \frac{8}{2^{(L-90)/5}}$$

where L is the measured A-weighted sound level.

II. CONVERSION BETWEEN ''DOSE'' AND ''8-HOUR TIME-WEIGHTED AVERAGE'' SOUND LEVEL

A. Compliance with subpart B of part 227 is determined by the amount of exposure to noise in the workplace. The amount of such exposure is usually measured with a dosimeter which gives a readout in terms of ''dose.'' In order to better understand the requirements of the regulation, dosimeter readings can be converted to an ''8-hour TWA.''

B. In order to convert the reading of a dosimeter into TWA, see Table A–2, below. This table applies to dosimeters that are set by the manufacturer to calculate dose or percent exposure according to the relationships in Table A–1. So, for example, a dose of 91 percent over an eight-hour day results in a TWA of 89.3 dB, and a dose of 50 percent corresponds to a TWA of 85 dB.

C. If the dose as read on the dosimeter is less than or greater than the values found in Table A–2, the TWA may be calculated by using the formula: TWA = 16.61 log10 (D/100) + 90 where TWA = 8-hour time-weighted average sound level and D = accumulated dose in percent exposure.

TABLE A–2—CONVERSION FROM ''PERCENT NOISE EXPOSURE'' OR ''DOSE'' TO ''8-HOUR TIME-WEIGHTED AVERAGE SOUND LEVEL'' (TWA)

Dose or percent noise exposure	TWA
10	73.4
15	76.3
20	78.4
25	80.0
30	81.3
35	82.4
40	83.4
45	84.2
50	85.0
55	85.7
60	86.3
65	86.9
70	87.4
75	87.9
80	88.4
81	88.5
82	88.6
83	88.7
84	88.7
85	88.8
86	88.9
87	89.0
88	89.1
89	89.2
90	89.2
91	89.3
92	89.4
93	89.5
94	89.6
95	89.6
96	89.7
97	89.8
98	89.9
99	89.9
100	90.0
101	90.1
102	90.1
103	90.2
104	90.3
105	90.4
106	90.4
107	90.5
108	90.6
109	90.6

TABLE A–2—CONVERSION FROM "PERCENT NOISE EXPOSURE" OR "DOSE" TO "8-HOUR TIME-WEIGHTED AVERAGE SOUND LEVEL" (TWA)—Continued

Dose or percent noise exposure	TWA
110	90.7
111	90.8
112	90.8
113	90.9
114	90.9
115	91.1
116	91.1
117	91.1
118	91.2
119	91.3
120	91.3
125	91.6
130	91.9
135	92.2
140	92.4
145	92.7
150	92.9
155	93.2
160	93.4
165	93.6
170	93.8
175	94.0
180	94.2
185	94.4
190	94.6
195	94.8
200	95.0
210	95.4
220	95.7
230	96.0
240	96.3
250	96.6
260	96.9
270	97.2
280	97.4
290	97.7
300	97.9
310	98.2
320	98.4
330	98.6
340	98.8
350	99.0
360	99.2
370	99.4
380	99.6
390	99.8
400	100.0
410	100.2
420	100.4
430	100.5
440	100.7
450	100.8
460	101.0
470	101.2
480	101.3
490	101.5
500	101.6
510	101.8
520	101.9
530	102.0
540	102.2
550	102.3
560	102.4
570	102.6
580	102.7
590	102.8
600	102.9

TABLE A–2—CONVERSION FROM "PERCENT NOISE EXPOSURE" OR "DOSE" TO "8-HOUR TIME-WEIGHTED AVERAGE SOUND LEVEL" (TWA)—Continued

Dose or percent noise exposure	TWA
610	103.0
620	103.2
630	103.3
640	103.4
650	103.5
660	103.6
670	103.7
680	103.8
690	103.9
700	104.0
710	104.1
720	104.2
730	104.3
740	104.4
750	104.5
760	104.6
770	104.7
780	104.8
790	104.9
800	105.0
810	105.1
820	105.2
830	105.3
840	105.4
850	105.4
860	105.5
870	105.6
880	105.7
890	105.8
900	105.8
910	105.9
920	106.0
930	106.1
940	106.2
950	106.2
960	106.3
970	106.4
980	106.5
990	106.5
999	106.6

APPENDIX B TO PART 227—METHODS FOR ESTIMATING THE ADEQUACY OF HEARING PROTECTOR ATTENUATION

This appendix is mandatory.

Employers must select one of the following three methods by which to estimate the adequacy of hearing protector attenuation.

I. DERATE BY TYPE

Derate the hearing protector attenuation by type using the following requirements:

A. Subtract 7 dB from the published Noise Reduction Rating (NRR).

B. Reduce the resulting amount by:

1. 20% for earmuffs,
2. 40% for form-able earplugs, or
3. 60% for all other earplugs.

C. Subtract the remaining amount from the A-weighted TWA. You will have the estimated A-weighted TWA for that hearing protector.

II. METHOD B FROM ANSI S12.6–1997 (REAFFIRMED 2002)

Use Method B, which is found in ANSI S12.6–1997 (Reaffirmed 2002) ''Methods for Measuring the Real-Ear Attenuation of Hearing Protectors.'' The Director of the Federal Register approves the incorporation by reference of this standard in accordance with 5 U.S.C. 552(a) and 1 CFR part 51. You may obtain a copy of the incorporated standard from the American National Standards Institute at 1819 L Street, NW., Washington, DC 20036, or *http://www.ansi.org*. You may inspect a copy of the incorporated standard at the Federal Railroad Administration, Docket Room, 1120 Vermont Ave., Suite 700, Washington, DC 20005, or at the National Archives and Records Administration (NARA). For information on the availability of this material at NARA, call 202–741–6030, or go to *http://www.archives.gov/federal_register/code_of_federal_regulations/ibr_locations.html*.

III. OBJECTIVE MEASUREMENT

Use actual measurements of the level of noise exposure (as an A-weighted SLOW response dose) inside the hearing protector when the employee wears the hearing protector in the actual work environment.

APPENDIX C TO PART 227—AUDIOMETRIC BASELINE REVISION

This appendix is mandatory beginning on February 26, 2009.

I. GENERAL

A. A professional reviewer (audiologist, otolaryngologist, or physician) shall use these procedures when revising baseline audiograms.

B. Although these procedures can be programmed by a computer to identify records for potential revision, the final decision for revision rests with a human being. Because the goal of the guidelines is to foster consistency among different professional reviewers, human override of the guidelines must be justified by specific concrete reasons.

C. These procedures do not apply to: The identification of standard threshold shifts (STS) other than an FRA STS[1] or to the calculation of the 25-dB average shifts that are reportable on the Form FRA F 6180.55a.

D. Initially, the baseline is the latest audiogram obtained before entry into the hearing conservation program. If no appropriate pre-entry audiogram exists, the baseline is the first audiogram obtained after entry into the hearing conservation program. Each subsequent audiogram is reviewed to detect improvement in the average (average of thresholds at 2, 3, and 4 kHz) and to detect an FRA STS. The two ears are examined separately and independently for improvement and for worsening. If one ear meets the criteria for revision of baseline, then the baseline is revised for that ear only. Therefore, if the two ears show different hearing trends, the baseline for the left ear may be from one test date, while the baseline for the right ear may be from a different test date.

E. Age corrections do not apply in considering revisions for improvement (Rule 1). The FRA-allowed age corrections from appendix F of Part 227[2] may be used, if desired, before considering revision for persistent STS. Rule 2 operates in the same way, whether age corrections are used or not.

II. RULE 1: REVISION FOR PERSISTENT IMPROVEMENT

If the average of the thresholds for 2, 3, and 4 kHz for either ear shows an improvement of 5 dB or more from the baseline value, and the improvement is present on one test and persistent on the next test, then the record should be identified for review by the audiologist, otolaryngologist, or physician for potential revision of the baseline for persistent improvement. The baseline for that ear should be revised to the test which shows the lower (more sensitive) value for the average of thresholds at 2, 3, and 4 kHz unless the audiologist, otolaryngologist, or physician determines and documents specific reasons for not revising. If the values of the three-frequency average are identical for the two tests, then the earlier test becomes the revised baseline.

III. RULE 2: REVISION FOR PERSISTENT STANDARD THRESHOLD SHIFT

A. If the average of thresholds for 2, 3, and 4 kHz for either ear shows a worsening of 10 dB or more from the baseline value, and the STS persists on the next periodic test (or the next test given at least 6 months later), then the record should be identified for review by the audiologist, otolaryngologist, or physician for potential revision of the baseline for persistent worsening. Unless the audiologist, otolaryngologist, or physician determines and documents specific reasons for not revising, the baseline for that ear should be revised to the test which shows the lower (more sensitive) value for the average of thresholds at 2, 3, and 4 kHz. If both tests show the same numerical value for the average of 2, 3, and 4 kHz, then the audiologist,

[1] OSHA and FRA use the same definition for Standard Threshold Shift (STS). FRA's definition is located in §227.5. OSHA's definition is located in 29 CFR 1910.95(g)(10)(i).

[2] FRA and OSHA use the same age-correction provisions. FRA's is found in appendix F of part 227 and OSHA's in appendix F of 29 CFR 1910.95.

otolaryngologist, or physician should revise the baseline to the earlier of the two tests, unless the later test shows better (more sensitive) thresholds for other test frequencies.

B. Following an STS, a retest within 90 days of the periodic test may be substituted for the periodic test if the retest shows better (more sensitive) results for the average threshold at 2, 3, and 4 kHz.

C. If the retest is used in place of the periodic test, then the periodic test is retained in the record, but it is marked in such a way that it is no longer considered in baseline revision evaluations. If a retest within 90 days of periodic test confirms an FRA STS shown on the periodic test, the baseline will not be revised at that point because the required six-month interval between tests showing STS persistence has not been met. The purpose of the six-month requirement is to prevent premature baseline revision when STS is the result of temporary medical conditions affecting hearing.

D. Although a special retest after six months could be given, if desired, to assess whether the STS is persistent, in most cases, the next annual audiogram would be used to evaluate persistence of the STS.

APPENDIX D TO PART 227—AUDIOMETRIC TEST ROOMS

This appendix is mandatory.

A. Rooms used for audiometric testing shall not have background sound pressure levels exceeding those in Table D–1 when measured by equipment conforming at least to the Type 2 requirements of ANSI S1.4–1983 (Reaffirmed 2001) and to the Class 2 requirements of ANSI S1.11–2004, ''Specification for Octave-Band and Fractional-Octave-Band Analog and Digital Filters.''

B. The Director of the Federal Register approves the incorporation by reference of ANSI S1.4–1983 (Reaffirmed 2001) and S.1.11–2004 in this section in accordance with 5 U.S.C. 552(a) and 1 CFR part 51. You may obtain a copy of the incorporated standard from the American National Standards Institute at 1819 L Street, NW., Washington, DC 20036 or *http://www.ansi.org*. You may inspect a copy of the incorporated standard at the Federal Railroad Administration, Docket Room, 1120 Vermont Ave., NW., Suite 700, Washington, DC 20005, or at the National Archives and Records Administration (NARA). For information on the availability of this material at NARA, call 202–741–6030, or go to *http://www.archives.gov/federal_register/code_of_federal_regulations/ibr_locations.html*.

TABLE D–1—MAXIMUM ALLOWABLE OCTAVE-BAND SOUND PRESSURE LEVELS FOR AUDIOMETRIC TEST ROOMS

Octave-band center frequency (Hz)	500	1000	2000	4000	8000
Sound pressure levels—supra-aural earphones	40	40	47	57	62
Sound pressure levels—insert earphones	50	47	49	50	56

APPENDIX E TO PART 227—USE OF INSERT EARPHONES FOR AUDIOMETRIC TESTING

This appendix is mandatory.

Section 227.111(d) allows railroads to use insert earphones for audiometric testing. Railroads are not required to use insert earphones, however, where they elect to use insert earphones, they must comply with the requirements of this appendix.

I. ACCEPTABLE FIT

A. The audiologist, otolaryngologist, or other physician responsible for conducting the audiometric testing, shall identify ear canals that prevent achievement of an acceptable fit with insert earphones, or shall assure that any technician under his/her authority who conducts audiometric testing with insert earphones has the ability to identify such ear canals.

B. Technicians who conduct audiometric tests must be trained to insert the earphones correctly into the ear canals of test subjects and to recognize conditions where ear canal size prevents achievement of an acceptable insertion depth (fit).

C. Insert earphones shall not be used for audiometric testing of employees with ear canal sizes that prevent achievement of an acceptable insertion depth (fit).

II. PROPER USE

The manufacturer's guidelines for proper use of insert earphones must be followed.

III. AUDIOMETER CALIBRATION

A. Audiometers used with insert earphones must be calibrated in accordance with ANSI S3.6–2004, ''Specification for Audiometers.'' The Director of the Federal Register approves the incorporation by reference of this standard in this section in accordance with 5 U.S.C. 552(a) and 1 CFR part 51. You may obtain a copy of the incorporated standard from the American National Standards Institute at 1819 L Street, NW., Washington, DC

20036 or *http://www.ansi.org*. You may inspect a copy of the incorporated standard at the Federal Railroad Administration, Docket Room, 1120 Vermont Ave., NW., Suite 700, Washington, DC 20005, or at the National Archives and Records Administration (NARA). For information on the availability of this material at NARA, call 202–741–6030, or go to *http://www.archives.gov/federal_register/code_of_federal_regulations/ibr_locations.html*.

B. Audiometers used with insert earphones must be calibrated using one of the couplers listed in Table 7 of ANSI S3.6–2004.

C. The acoustical calibration shall be conducted annually.

D. The functional calibration must be conducted before each day's use of the audiometer.

IV. BACKGROUND NOISE LEVELS

Testing shall be conducted in a room where the background ambient noise octave-band sound pressures levels meet appendix D to this part.

V. CONVERSION FROM SUPRA AURAL EARPHONES

At the time of conversion from supra-aural to insert earphones, testing must be performed with both types of earphones.

A. The test subject must have a quiet period of at least 14 hours before testing. Hearing protectors may be used as a substitute for the quiet period.

B. The supra-aural earphone audiogram shall be compared to the baseline audiogram, or the revised baseline audiogram if appropriate, to check for a Standard Threshold Shift (STS). In accordance with § 227.109(f)(2), if the audiogram shows an STS, retesting with supra-aural earphones must be performed within 90 days. If the resulting audiogram confirms the STS, then it is adopted as the current test instead of the prior one.

C. If retesting with supra-aural earphones is performed, then retesting with insert earphones must be performed at that time to establish the baseline for future audiometric tests using the insert earphones.

VI. REVISED BASELINE AUDIOGRAMS

A. If an STS is confirmed by the re-test with supra-aural earphones, the audiogram may become the revised baseline audiogram per the requirements of § 227.109(i) for all future hearing tests with supra-aural earphones. The insert-earphone audiogram will become the new reference baseline audiogram for all future hearing tests performed with insert earphones.

B. If an STS is not indicated by the test with supra-aural earphones, the baseline audiogram remains the reference baseline audiogram for all future supra-aural earphone tests, until such time as an STS is observed. In this case, the insert-earphone audiogram taken at the same time will become the new reference baseline audiogram for all future hearing tests performed with insert earphones.

C. Transitioning Employees with Partial Shifts. Employers must account for the workers who are in the process of developing an STS (e.g., demonstrate a 7 dB average shift), but who at the time of the conversion to insert earphones do not have a 10 dB average shift. Employers who want to use insert earphones must enter the 7 dB shift information in the employee's audiometric test records although it is not an ''STS''. When the next annual audiogram using insert earphones shows an average threshold shift at 2000, 3000 and 4000 Hz of 3 dB, completing the full shift (7 dB + 3 dB), employers must then label that average shift as an STS. This triggers the follow-up procedures at § 227.109(h).

VII. RECORDS

All audiograms (including both those produced through the use of insert earphones and supra-aural headsets), calculations, pure-tone individual and average threshold shifts, full STS migrations, and audiometric acoustical calibration records, are to be preserved as records and maintained according to § 227.121(c).

APPENDIX F TO PART 227—CALCULATIONS AND APPLICATION OF AGE CORRECTIONS TO AUDIOGRAMS

This appendix is non-mandatory.

In determining whether a standard threshold shift (STS) has occurred, allowance may be made for the contribution of aging to the change in hearing level by adjusting the most recent audiogram. If the employer chooses to adjust the audiogram, the employer shall follow the procedure described below. This procedure and the age correction tables were developed by the National Institute for Occupational Safety and Health in a criteria document. See ''Criteria for a Recommended Standard: Occupational Exposure to Noise,'' Department of Health and Human Services (NIOSH) Publication No. 98–126. For each audiometric test frequency:

I. Determine from Tables F–1 or F–2 the age correction values for the employee by:

A. Finding the age at which the most recent audiogram was taken and recording the corresponding values of age corrections at 1000 Hz through 6000 Hz;

B. Finding the age at which the baseline audiogram was taken and recording the corresponding values of age corrections at 1000 Hz through 6000 Hz.

II. Subtract the values found in step (I)(B) from the value found in step (I)(A).

III. The differences calculated in step (II) represented that portion of the change in hearing that may be due to aging.

Example: Employee is a 32-year-old male. The audiometric history for his right ear is shown in decibels below.

Employee's age	Audiometric test frequency (Hz)				
	1000	2000	3000	4000	6000
26	10	5	5	10	5
27*	0	0	0	5	5
28	0	0	0	10	5
29	5	0	5	15	5
30	0	5	10	20	10
31	5	10	20	15	15
32*	5	10	10	25	20

a. The audiogram at age 27 is considered the baseline since it shows the best hearing threshold levels. Asterisks have been used to identify the baseline and most recent audiogram. A threshold shift of 20 dB exists at 4000 Hz between the audiograms taken at ages 27 and 32.

b. (The threshold shift is computed by subtracting the hearing threshold at age 27, which was 5, from the hearing threshold at age 32, which is 25). A retest audiogram has confirmed this shift. The contribution of aging to this change in hearing may be estimated in the following manner:

c. Go to Table F–1 and find the age correction values (in dB) for 4000 Hz at age 27 and age 32.

	Frequency (Hz)				
	1000	2000	3000	4000	6000
Age 32	6	5	7	10	14
Age 27	5	4	6	7	11
Difference	1	1	1	3	3

d. The difference represents the amount of hearing loss that may be attributed to aging in the time period between the baseline audiogram and the most recent audiogram. In this example, the difference at 4000 Hz is 3 dB. This value is subtracted from the hearing level at 4000 Hz, which in the most recent audiogram is 25, yielding 22 after adjustment. Then the hearing threshold in the baseline audiogram at 4000 Hz (5) is subtracted from the adjusted annual audiogram hearing threshold at 4000 Hz (22). Thus the age-corrected threshold shift would be 17 dB (as opposed to a threshold shift of 20 dB without age correction).

TABLE F–1—AGE CORRECTION VALUES IN DECIBELS FOR MALES

Years	Audiometric test frequencies (Hz)				
	1000	2000	3000	4000	6000
20 or younger	5	3	4	5	8
21	5	3	4	5	8
22	5	3	4	5	8
23	5	3	4	6	9
24	5	3	5	6	9
25	5	3	5	7	10
26	5	4	5	7	10
27	5	4	6	7	11
28	6	4	6	8	11
29	6	4	6	8	12
30	6	4	6	9	12
31	6	4	7	9	13
32	6	5	7	10	14
33	6	5	7	10	14
34	6	5	8	11	15
35	7	5	8	11	15
36	7	5	9	12	16
37	7	6	9	12	17

TABLE F–1—AGE CORRECTION VALUES IN DECIBELS FOR MALES—Continued

Years	Audiometric test frequencies (Hz)				
	1000	2000	3000	4000	6000
38	7	6	9	13	17
39	7	6	10	14	18
40	7	6	10	14	19
41	7	6	10	14	20
42	8	7	11	16	20
43	8	7	12	16	21
44	8	7	12	17	22
45	8	7	13	18	23
46	8	8	13	19	24
47	8	8	14	19	24
48	9	8	14	20	25
49	9	9	15	21	26
50	9	9	16	22	27
51	9	9	16	23	28
52	9	10	17	24	29
53	9	10	18	25	30
54	10	10	18	26	31
55	10	11	19	27	32
56	10	11	20	28	34
57	10	11	21	29	35
58	10	12	22	31	36
59	11	12	22	32	37
60 or older	11	13	23	33	38

TABLE F–2—AGE CORRECTION VALUES IN DECIBELS FOR FEMALES

Years	Audiometric test frequencies (Hz)				
	1000	2000	3000	4000	6000
20 or younger	7	4	3	3	6
21	7	4	4	3	6
22	7	4	4	4	6
23	7	5	4	4	7
24	7	5	4	4	7
25	8	5	4	4	7
26	8	5	5	4	8
27	8	5	5	5	8
28	8	5	5	5	8
29	8	5	5	5	9
30	8	6	5	5	9
31	8	6	6	5	9
32	9	6	6	6	10
33	9	6	6	6	10
34	9	6	6	6	10
35	9	6	7	7	11
36	9	7	7	7	11
37	9	7	7	7	12
38	10	7	7	7	12
39	10	7	8	8	12
40	10	7	8	8	13
41	10	8	8	8	13
42	10	8	9	9	13
43	11	8	9	9	14
44	11	8	9	9	14
45	11	8	10	10	15
46	11	9	10	10	15
47	11	9	10	11	16
48	12	9	11	11	16
49	12	9	11	11	16
50	12	10	11	12	17
51	12	10	12	12	17
52	12	10	12	13	18
53	13	10	13	13	18
54	13	11	13	14	19
55	13	11	14	14	19
56	13	11	14	15	20
57	13	11	15	15	20

TABLE F–2—AGE CORRECTION VALUES IN DECIBELS FOR FEMALES—Continued

Years	Audiometric test frequencies (Hz)				
	1000	2000	3000	4000	6000
58	14	12	15	16	21
59	14	12	16	16	21
60 or older	14	12	16	17	22

APPENDIX G TO PART 227—SCHEDULE OF CIVIL PENALTIES

Section	Violation	Willful violation
Subpart A—General		
227.3 Application:		
(b)(4) Failure to meet the required conditions for foreign railroad operations	$2,500	$5,000
Subpart B—General Requirements		
227.103 Noise monitoring program:		
(a) Failure to develop and/or implement a noise monitoring program	7,500	10,000
(b) Failure to use sampling as required	2,500	5,000
(c) Failure to integrate sound levels and/or make noise measurements as required	2,500	5,000
(d) Failure to repeat noise monitoring where required	2,500	5,000
(e) Failure to consider work environments where hearing protectors may be omitted	2,500	5,000
(f) Failure to provide opportunity to observe monitoring	2,000	4,000
(g) Reporting of Monitoring Results:		
(1) Failure to notify monitored employee	2,500	5,000
(2) Failure to post results as required	2,500	5,000
227.105 Protection of employees:		
(a) Failure to provide appropriate protection to exposed employee	7,500	10,000
(b) Failure to observe and document source(s) of noise exposures	2,500	5,000
(c)–(d) Failure to protect employee from impermissible continuous noise	5,000	7,500
227.107 Hearing conservation program:		
(a) Failure to administer a HCP	7,500	10,000
(b) Failure to compute noise exposure as required	3,500	7,000
227.109 Audiometric testing program:		
(a) Failure to establish and/or maintain an audiometric testing program	7,500	10,000
(b) Failure to provide audiometric test at no cost to employee	2,500	5,000
(c) Failure to have qualified person perform audiometric test	2,500	5,000
(d) [Reserved]		
(e) Failure to establish baseline audiogram as required	3,500	7,000
(f) Failure to offer and/or require periodic audiograms as required	2,500	5,000
(g) Failure to evaluate audiogram as required	2,500	5,000
(h) Failure to comply with follow-up procedures as required	2,500	5,000
(i) Failure to use required method for revising baseline audiograms	2,500	5,000
227.111 Audiometric test requirements:		
(a) Failure to conduct test as required	2,500	5,000
(b) Failure to use required equipment	2,500	5,000
(c) Failure to administer test in room that meets requirements	2,500	5,000
(d) Complete failure to calibrate	5,000	7,500
(1) Failure to perform daily calibration as required	2,000	4,000
(2) Failure to perform annual calibration as required	2,000	4,000
(3) Failure to perform exhaustive calibration as required	2,000	4,000
227.115 Hearing protectors (HP):		
(a) Failure to comply with general requirements	3,000	6,000
(b) Failure to make HP available as required	2,500	5,000
(c) Failure to require use of HP at action level	5,000	7,500
(d) Failure to require use of HP at TWA of 90 dB(A)	5,000	7,500
227.117 Hearing protector attenuation:		
(a) Failure to evaluate attenuation as required	2,500	5,000
(b)–(c) Failure to attenuate to required level	2,500	5,000
(d) Failure to re-evaluate attenuation	2,500	5,000
227.119 Training program:		
(a) Failure to institute a training program as required	5,000	7,500
(b) Failure to provide training within required time frame	2,500	5,000
(c) Failure of program and/or training materials to include required information	2,500	5,000
227.121 Recordkeeping:		
(a) General Requirements:		
(1) Failure to make record available as required	2,500	5,000
(3) Failure to transfer or retain records as required	2,000	4,000
(b)–(f) Records:		
(1) Failure to maintain record or failure to maintain record with required information	2,000	4,000

Section	Violation	Willful violation
(2) Failure to retain records for required time period	2,000	4,000

PART 228—HOURS OF SERVICE OF RAILROAD EMPLOYEES

Subpart A—General

Sec.
228.1 Scope.
228.3 Application.
228.5 Definitions.

Subpart B—Records and Reporting

228.7 Hours of duty.
228.9 Railroad records; general.
228.11 Hours of duty records.
228.17 Dispatcher's record of train movements.
228.19 Monthly reports of excess service.
228.21 Civil penalty.
228.23 Criminal penalty.

Subpart C—Construction of Employee Sleeping Quarters

228.101 Distance requirement; definitions.
228.103 Approval procedure: construction within one-half mile (2,640 feet) (804 meters).
228.105 Additional requirements; construction within one-third mile (1,760 feet) (536 meters) of certain switching.
228.107 Action on petition.

APPENDIX A TO PART 228—REQUIREMENTS OF THE HOURS OF SERVICE ACT: STATEMENT OF AGENCY POLICY AND INTERPRETATION
APPENDIX B TO PART 228—SCHEDULE OF CIVIL PENALTIES
APPENDIX C TO PART 228—GUIDELINES FOR CLEAN, SAFE, AND SANITARY RAILROAD PROVIDED CAMP CARS

AUTHORITY: 49 U.S.C. 20103, 20107, 21101–21108; 28 U.S.C. 2461, note and 49 CFR 1.49.

SOURCE: 37 FR 12234, June 21, 1972, unless otherwise noted.

Subpart A—General

§ 228.1 Scope.

This part—

(a) Prescribes reporting and record keeping requirements with respect to the hours of service of certain railroad employees; and

(b) Establishes standards and procedures concerning the construction or reconstruction of employee sleeping quarters.

[43 FR 31012, July 19, 1978]

§ 228.3 Application.

(a) Except as provided in paragraph (b), this part applies to all railroads.

(b) This part does not apply to:

(1) A railroad that operates only on track inside an installation which is not part of the general railroad system of transportation; or

(2) Rapid transit operations in an urban area that are not connected with the general railroad system of transportation.

[54 FR 33229, Aug. 14, 1989]

§ 228.5 Definitions.

As used in this part:

(a) *Administrator* means the Administrator of the Federal Railroad Administrator or any person to whom he delegated authority in the matter concerned.

(b) *Carrier*, *common carrier*, and *common carrier engaged in interstate or foreign commerce by railroad* mean *railroad* as that term is defined below.

(c) *Employee* means an individual employed by the common carrier who (1) is actually engaged in or connected with the movement of any train, including a person who performs the duties of a hostler, (2) dispatches, reports, transmits, receives, or delivers orders pertaining to train movements by the use of telegraph, telephone, radio, or any other electrical or mechanical device, or (3) is engaged in installing, repairing or maintaining signal systems.

(d) *Railroad* means all forms of nonhighway ground transportation that run on rails or electromagnetic guideways, including (1) commuter or other short-haul rail passenger service in a metropolitan or suburban area, and (2) high speed ground transportation systems that connect metropolitan areas, without regard to whether they use new technologies not associated with traditional railroads. Such term does not include rapid transit operations

within an urban area that are not connected to the general railroad system of transportation.

[54 FR 33229, Aug. 14, 1989]

Subpart B—Records and Reporting

§ 228.7 Hours of duty.

(a) For purposes of this part, time on duty of an employee actually engaged in or connected with the movement of any train, including a hostler, begins when he reports for duty and ends when he is finally released from duty, and includes—

(1) Time engaged in or connected with the movement of any train;

(2) Any interim period available for rest at a location that is not a designated terminal;

(3) Any interim period of less than 4 hours available for rest at a designated terminal;

(4) Time spent in deadhead transportation en route to a duty assignment; and

(5) Time engaged in any other service for the carrier.

Time spent in deadhead transportation by an employee returning from duty to his point of final release may not be counted in computing time off duty or time on duty.

(b) For purposes of this part, time on duty of an employee who dispatches, reports, transmits, receives, or delivers orders pertaining to train movements by use of telegraph, telephone, radio, or any other electrical or mechanical device includes all time on duty in other service performed for the common carrier during the 24-hour period involved.

(c) For purposes of this part, time on duty of an employee who is engaged in installing, repairing or maintaining signal systems includes all time on duty in other service performed for a common carrier during the 24-hour period involved.

[37 FR 12234, June 21, 1972, as amended at 43 FR 3124, Jan. 23, 1978]

§ 228.9 Railroad records; general.

(a) Records maintained under this part shall be—

(1) Signed by the employee whose time on duty is being recorded or, in the case of train and engine crews, signed by the ranking crew member;

(2) Retained for 2 years; and

(3) Available for inspection and copying by the Administrator during regular business hours.

(b) [Reserved]

§ 228.11 Hours of duty records.

(a) Each carrier shall keep a record of the following information concerning the hours of duty of each employee:

(1) Identification of employee.

(2) Place, date, and beginning and ending times for hours of duty in each occupation.

(3) Total time on duty in all occupations.

(4) Number of consecutive hours off duty prior to going on duty.

(5) Beginning and ending times of periods spent in transportation, other than personal commuting, to or from a duty assignment and mode of transportation (train, track car, carrier motor vehicle, personal automobile, etc.).

(b) [Reserved]

[37 FR 12234, June 21, 1972, as amended at 43 FR 3124, Jan. 23, 1978]

§ 228.17 Dispatcher's record of train movements.

(a) Each carrier shall keep, for each dispatching district, a record of train movements made under the direction and control of a dispatcher who uses telegraph, telephone, radio, or any other electrical or mechanical device to dispatch, report, transmit, receive, or deliver orders pertaining to train movements. The following information shall be included in the record:

(1) Identification of timetable in effect.

(2) Location and date.

(3) Identification of dispatchers and their times on duty.

(4) Weather conditions at 6-hour intervals.

(5) Identification of enginemen and conductors and their times on duty.

(6) Identification of trains and engines.

(7) Station names and office designations.

(8) Distances between stations.

(9) Direction of movement and the time each train passes all reporting stations.

(10) Arrival and departure times of trains at all reporting stations.

(11) Unusual events affecting movement of trains and identification of trains affected.

(b) [Reserved]

§ 228.19 Monthly reports of excess service.

(a) Each carrier shall report to the Associate Administrator for Safety, (RRS–1), Federal Railroad Administration, Washington, DC 20590, each of the following instances within 30 days after the calendar month in which the instance occurs:

(1) A member of a train or engine crew or other employee engaged in or connected with the movement of any train, including a hostler, is on duty for more than 12 consecutive hours.

(2) A member of a train or engine crew or other employee engaged in or connected with the movement of any train, including a hostler, returns to duty after 12 hours of continuous service without at least 10 consecutive hours off duty.

(3) A member of a train or engine crew or other employee engaged in or connected with the movement of any train, including a hostler, continues on duty without at least 8 consecutive hours off duty during the preceding 24 hours.[1]

(4) A member of a train or engine crew or other employee engaged in or connected with the movement of any train, including a hostler, returns to duty without at least 8 consecutive hours off duty during the preceding 24 hours.[1]

(5) An employee who transmits, receives, or delivers orders affecting train movements is on duty for more than 9 hours in any 24-hour period at an office where two or more shifts are employed.

(6) An employee who transmits, receives, or delivers orders affecting train movements is on duty for more than 12 hours in any 24-hour period at any office where one shift is employed.

(7) An employee engaged in installing, repairing or maintaining signal systems is on duty for more than 12 hours in a twenty-four hour period.

(8) An employee engaged in installing, repairing or maintaining signal systems returns to duty after 12 hours of continuous service without at least 10 consecutive hours off duty.

(9) An employee engaged in installing, repairing or maintaining signal systems continues on duty without at least 8 consecutive hours off duty during the preceding 24 hours.

(10) An employee engaged in installing, repairing or maintaining signal systems returns to duty without at least 8 consecutive hours off duty during the preceding 24 hours.

(b) Reports required by paragraph (a) of this section shall be filed in writing on FRA Form F–6180–3[2] with the Office of Safety, Federal Railroad Administration, Washington, DC 20590. A separate form shall be used for each instance reported.

[37 FR 12234, June 21, 1972, as amended at 43 FR 3124, Jan. 23, 1978]

§ 228.21 Civil penalty.

Any person (an entity of any type covered under 1 U.S.C. 1, including but not limited to the following: a railroad; a manager, supervisor, official, or other employee or agent of a railroad; any owner, manufacturer, lessor, or lessee of railroad equipment, track, or facilities; any independent contractor providing goods or services to a railroad; and any employee of such owner, manufacturer, lessor, lessee, or independent contractor) who violates any requirement of this part or causes the violation of any such requirement is subject to a civil penalty of at least $550 and not more than $16,000 per violation, except that: Penalties may be

[1] Instances involving tours of duty that are broken by four or more consecutive hours off duty time at a designated terminal which do not constitute more than a total of 12 hours time on duty are not required to be reported, provided such tours of duty are immediately preceded by 8 or more consecutive hours off-duty time. Instances involving tours of duty that are broken by less than 8 consecutive hours off duty which constitute more than a total of 12 hours time on duty must be reported.

[2] Form may be obtained from the Office of Safety, Federal Railroad Administration, Washington, DC 20590. Reproduction is authorized.

assessed against individuals only for willful violations, and, where a grossly negligent violation or a pattern of repeated violations has created an imminent hazard of death or injury to persons, or has caused death or injury, a penalty not to exceed $27,000 per violation may be assessed. Each day a violation continues shall constitute a separate offense. See appendix B to this part for a statement of agency civil penalty policy. Violations of the Hours of Service Act itself (*e.g.*, requiring an employee to work excessive hours or beginning construction of a sleeping quarters subject to approval under subpart C of this part without prior approval) are subject to penalty under that Act's penalty provision, 45 U.S.C. 64a.

[53 FR 52931, Dec. 29, 1988, as amended at 63 FR 11622, Mar. 10, 1998; 69 FR 30594, May 28, 2004; 72 FR 51197, Sept. 6, 2007]

§ 228.23 Criminal penalty.

Any person who knowingly and willfully falsifies a report or record required to be kept under this part or otherwise knowingly and willfully violates any requirement of this part may be liable for criminal penalties of a fine up to $5,000, imprisonment for up to two years, or both, in accordance with 45 U.S.C. 438(e).

[53 FR 52931, Dec. 29, 1988]

Subpart C—Construction of Employee Sleeping Quarters

SOURCE: 43 FR 31012, July 19, 1978, unless otherwise noted.

§ 228.101 Distance requirement; definitions.

(a) The Hours of Service Act, as amended (45 U.S.C. 61–64b), makes it unlawful for any common carrier engaged in interstate or foreign commerce by railroad to begin, on or after July 8, 1976, the construction or reconstruction of sleeping quarters for employees who perform duties covered by the act ''within or in the immediate vicinity (as determined in accordance with rules prescribed by the Secretary of Transportation) of any area where railroad switching or humping operations are performed.'' 45 U.S.C. 62(a)(4). This subpart sets forth (1) a general definition of ''immediate vicinity'' (§ 228.101(b)), (2) procedures under which a carrier may request a determination by the Federal Railroad Administration that a particular proposed site is not within the ''immediate vicinity'' of railroad switching or humping operations (§§ 228.103 and 228.105), and (3) the basic criteria utilized in evaluating proposed sites (§ 228.107).

(b) Except as determined in accordance with the provisions of this subpart. ''The immediate vicinity'' shall mean the area within one-half mile (2,640 feet) (804 meters) of switching or humping operations as measured from the nearest rail of the nearest trackage where switching or humping operations are performed to the point on the site where the carrier proposes to construct or reconstruct the exterior wall of the structure, or portion of such wall, which is closest to such operations.

(c) As used in this subpart—

(1) *Construction* shall refer to the—

(i) Creation of a new facility;

(ii) Expansion of an existing facility;

(iii) Placement of a mobile or modular facility; or

(iv) Acquisition and use of an existing building.

(2) *Reconstruction* shall refer to the—

(i) Replacement of an existing facility with a new facility on the same site; or

(ii) Rehabilitation or improvement of an existing facility (normal periodic maintenance excepted) involving the expenditure of an amount representing more than 50 percent of the cost of replacing such facility on the same site at the time the work of rehabilitation or improvement began, the replacement cost to be estimated on the basis of contemporary construction methods and materials.

(3) *Switching or humping operations* includes the classification of placarded railroad cars according to commodity or destination, assembling of placarded cars for train movements, changing the position of placarded cars for purposes of loading, unloading, or weighing, and the placing of placarded cars for repair. However, the term does not include the moving of rail equipment in connection with work service, the moving of a train or part of a train within yard

limits by a road locomotive or placing locomotives or cars in a train or removing them from a train by a road locomotive while en route to the train's destination. The term does include operations within this definition which are conducted by any railroad; it is not limited to the operations of the carrier contemplating construction or reconstruction of railroad employee sleeping quarters.

(4) *Placarded car* shall mean a railroad car required to be placarded by the Department of Transportation hazardous materials regulations (49 CFR 172.504).

(5) The term L_{eq} (8) shall mean the equivalent steady state sound level which in 8 hours would contain the same acoustic energy as the time-varying sound level during the same time period.

§ 228.103 Approval procedure: construction within one-half mile (2,640 feet) (804 meters).

(a) A common carrier that has developed plans for the construction or reconstruction of sleeping quarters subject to this subpart and which is considering a site less than one-half mile (2,640 feet) (804 meters) from any area where switching or humping operations are performed, measured from the nearest rail of the nearest trackage utilized on a regular or intermittent basis for switching or humping operations to the point on the site where the carrier proposes to construct or reconstruct the exterior wall of the structure, or portion of such wall, which is closest to such operations, must obtain the approval of the Federal Railroad Administration before commencing construction or reconstruction on that site. Approval may be requested by filing a petition conforming to the requirements of this subpart.

(b) A carrier is deemed to have conducted switching or humping operations on particular trackage within the meaning of this subpart if placarded cars are subjected to the operations described in § 228.101(c)(3) within the 365-day period immediately preceding the date construction or reconstruction is commenced or if such operations are to be permitted on such trackage after such date. If the carrier does not have reliable records concerning the traffic handled on the trackage within the specified period, it shall be presumed that switching of placarded cars is conducted at the location and construction or reconstruction of sleeping quarters within one-half mile shall be subject to the approval procedures of this subpart.

(c) A petition shall be filed in triplicate with the Secretary, Railroad Safety Board, Federal Railroad Administration, Washington, DC 20590 and shall contain the following:

(1) A brief description of the type of construction planned, including materials to be employed, means of egress from the quarters, and actual and projected exterior noise levels and projected interior noise levels;

(2) The number of employees expected to utilize the quarters at full capacity;

(3) A brief description of the site, including:

(i) Distance from trackage where switching or humping operations are performed, specifying distances from particular functions such as classification, repair, assembling of trains from large groups of cars, etc. cetera;

(ii) Topography within a general area consisting of the site and all of the rail facilities close to the site;

(iii) Location of other physical improvements situated between the site and areas where railroad operations are conducted;

(4) A blueprint or other drawing showing the relationship of the site to trackage and other planned and existing facilities;

(5) The proposed or estimated date for commencement of construction;

(6) A description of the average number and variety of rail operations in the areas within one-half mile (2,640 feet) (804 meters) of the site (e.g., number of cars classified in 24-hour period; number of train movements);

(7) An estimate of the average daily number of placarded rail cars transporting hazardous materials through the railroad facility (where practicable, based on a 365-day period sample, that period not having ended more than 120 days prior to the date of filing the petition), specifying the—

(i) Number of such cars transporting class A explosives and poison gases; and

(ii) Number of DOT Specification 112A and 114A tank cars transporting flammable gas subject to FRA emergency order No. 5;

(8) A statement certified by a corporate officer of the carrier possessing authority over the subject matter explaining any plans of that carrier for utilization of existing trackage, or for the construction of new trackage, which may impact on the location of switching or humping operations within one-half mile of the proposed site (if there are no plans, the carrier official must so certify); and

(9) Any further information which is necessary for evaluation of the site.

(d) A petition filed under this section must contain a statement that the petition has been served on the recognized representatives of the railroad employees who will be utilizing the proposed sleeping quarters, together with a list of the employee representatives served.

§ 228.105 Additional requirements; construction within one-third mile (1,760 feet) (536 meters) of certain switching.

(a) In addition to providing the information specified by § 228.103, a carrier seeking approval of a site located within one-third mile (1,760 feet) (536 meters) of any area where railroad switching or humping operations are performed involving any cars required to be placarded ''EXPLOSIVES A'' or ''POISON GAS'' or any DOT Specification 112A or 114A tank cars transporting flammable gas subject to FRA emergency order No. 5 shall establish by a supplementary statement certified by a corporate officer possessing authority over the subject matter that—

(1) No feasible alternate site located at or beyond one-third mile from switching or humping operations is either presently available to the railroad or is obtainable within 3 miles (15,840 feet) (4,827 meters) of the reporting point for the employees who are to be housed in the sleeping quarters;

(2) Natural or other barriers exist or will be created prior to occupancy of the proposed facility between the proposed site and any areas in which switching or humping operations are performed which will be adequate to shield the facility from the direct and severe effects of a hazardous materials accident/incident arising in an area of switching or humping operations;

(3) The topography of the property is such as most likely to cause any hazardous materials unintentionally released during switching or humping to flow away from the proposed site; and

(4) Precautions for ensuring employee safety from toxic gases or explosions such as employee training and evacuation plans, availability of appropriate respiratory protection, and measures for fire protection, have been considered.

(b) In the absence of reliable records concerning traffic handled on trackage within the one-third mile area, it shall be presumed that the types of cars enumerated in paragraph (a) of this section are switched on that trackage; and the additional requirements of this section shall be met by the petitioning carrier, unless the carrier establishes that the switching of the enumerated cars will be effectively barred from the trackage if the petition is approved.

§ 228.107 Action on petition.

(a) Each petition for approval filed under § 228.103 is referred to the Railroad Safety Board for action in accordance with the provisions of part 211, title 49, CFR, concerning the processing of requests for special approvals.

(b) In considering a petition for approval filed under this subpart, the Railroad Safety Board evaluates the material factors bearing on—

(1) The safety of employees utilizing the proposed facility in the event of a hazardous materials accident/incident and in light of other relevant safety factors; and

(2) Interior noise levels in the facility.

(c) The Railroad Safety Board will not approve an application submitted under this subpart if it appears from the available information that the proposed sleeping quarters will be so situated and constructed as to permit interior noise levels due to noise under the control of the railroad to exceed an $L_{eq}(8)$ value of 55dB(A). If individual air

conditioning and heating systems are to be utilized, projections may relate to noise levels with such units turned off.

(d) Approval of a petition filed under this subpart may be withdrawn or modified at any time if it is ascertained, after opportunity for a hearing, that any representation of fact or intent made by a carrier in materials submitted in support of a petition was not accurate or truthful at the time such representation was made.

APPENDIX A TO PART 228—REQUIREMENTS OF THE HOURS OF SERVICE ACT: STATEMENT OF AGENCY POLICY AND INTERPRETATION

First enacted in 1907, the Hours of Service Act was substantially revised in 1969 by Public Law 91–169. Further amendments were enacted as part of the Federal Railroad Safety Authorization Act of 1976, Public Law 94–348 and by the Rail Safety Improvement Act of 1988, Public Law 100–342. The purpose of the law is ''to promote the safety of employees and travelers upon railroads by limiting the hours of service of employees * * *.'' This appendix is designed to explain the effect of the law in commonly-encountered situations.

The Act governs the maximum work hours of employees engaged in one or more of the basic categories of covered service treated below. If an individual performs more than one kind of covered service during a tour of duty, then the most restrictive of the applicable limitations control.

The act applies to any railroad, as that term is defined in 45 U.S.C. 431(e). It governs the carrier's operations over its own railroad and all lines of road which it uses.

TRAIN AND ENGINE SERVICE

Covered Service. Train or engine service refers to the actual assembling or operation of trains. Employees who perform this type of service commonly include locomotive engineers, firemen, conductors, trainmen, switchmen, switchtenders (unless their duties come under the provisions of section 3) and hostlers. With the passage of the 1976 amendments, both inside and outside hostlers are considered to be connected with the movement of trains. Previously, only outside hostlers were covered. Any other employee who is actually engaged in or connected with the movement of any train is also covered, regardless of his job title.

Limitations on Hours. The Act establishes two limitations on hours of service. First, no employee engaged in train or engine service may be required or permitted to work in excess of twelve consecutive hours. After working a full twelve consecutive hours, an employee must be given at least ten consecutive hours off duty before being permitted to return to work.

Second, no employee engaged in train or engine service may be required or permitted to continue on duty or go on duty unless he has had at least eight consecutive hours off duty within the preceding twenty-four hours. This latter limitation, when read in conjunction with the requirements with respect to computation of duty time (discussed below) results in several conclusions:

(1) When an employee's work tour is broken or interrupted by a valid period of interim release (4 hours or more at a designated terminal), he may return to duty for the balance of the total 12-hour work tour during a 24-hour period.

(2) After completing the 12 hours of broken duty, or at the end of the 24-hour period, whichever occurs first, the employee may not be required or permitted to continue on duty or to go on duty until he has had at least 8 consecutive hours off duty.

(3) The 24-hour period referred to in paragraphs 1 and 2 above shall begin upon the commencement of a work tour by the employee immediately after his having received a statutory off-duty period of 8 or 10 hours as appropriate.

Duty time and effective periods of release. On-duty time commences when an employee reports at the time and place specified by the railroad and terminates when the employee is finally released of all responsibilities. (Time spent in deadhead transportation to a duty assignment is also counted as time on duty. See discussion below.) Any period available for rest that is of four or more hours and is at a designated terminal is off-duty time. All other periods available for rest must be counted as time on duty under the law, regardless of their duration.

The term ''designated terminal'' means a terminal (1) which is designated in or under a collective bargaining agreement as the ''home'' or ''away-from-home'' terminal for a particular crew assignment and (2) which has suitable facilities for food and lodging. Carrier and union representatives may agree to establish additional designated terminals having such facilities as points of effective release under the Act. Agreements to designate additional terminals for purposes of release under the Act should be reduced to writing and should make reference to the particular assignments affected and to the Hours of Service Act. The following are common situations illustrating the designated terminal concept:

(1) A freight or passenger road crew operates a train from home terminal ''A'' to away-from-home terminal ''B'' (or the reverse). Terminals ''A'' and ''B'' would normally be the designated terminals for this specific crew assignment. However, carrier

and employee representatives may agree to designate additional terminals having suitable facilities for food and lodging as appropriate points of release under the Hours of Service Act.

(2) A road crew operates a train in turnaround service from home terminal ''A'' to turn-around point ''B'' and back to ''A''. Terminal ''A'' is the only designated terminal for this specific crew assignment, unless carrier and employee representatives have agreed to designate additional terminals having suitable facilities for food and lodging.

(3) A crew is assigned to operate a maintenance-of-way work train from home terminal ''A'', work on line of road and tie up for rest along the line of road at point ''B''. Home terminal ''A'' and tie-up point ''B'' both qualify as designated terminals for this specific work train crew assignment. Of course, suitable facilities for food and lodging must be available at tie-up point ''B''.

Deadheading. Under the Act time spent in deadhead transportation receives special treatment. Time spent in deadhead transportation to a duty assignment by a train or engine service employee is considered on-duty time. Time spent in deadhead transportation from the final duty assignment of the work tour to the point of final release is not computed as either time on duty or time off duty. Thus, the period of deadhead transportation to point of final release may not be included in the required 8- or 10-hour off-duty period. Time spent in deadhead transportation to a duty assignment is calculated from the time the employee reports for deadhead until he reaches his duty assignment.

All time spent awaiting the arrival of a deadhead vehicle for transportation from the final duty assignment of the work tour to the point of final release is considered limbo time, *i.e.*, neither time on duty nor time off duty, provided that the employee is given no specific responsibilities to perform during this time. However, if an employee is required to perform service of any kind during that period (*e.g.*, protecting the train against vandalism, observing passing trains for any defects or unsafe conditions, flagging, shutting down locomotives, checking fluid levels, or communicating train consist information via radio), he or she will be considered as on duty until all such service is completed. Of course, where a railroad carrier's operating rules clearly relieve the employee of all duties during the waiting period and no duties are specifically assigned, the waiting time is not computed as either time on duty or time off duty.

Transit time from the employee's residence to his regular reporting point is not considered deadhead time.

If an employee utilizes personal automobile transportation to a point of duty assignment other than the regular reporting point in lieu of deadhead transportation provided by the carrier, such actual travel time is considered as deadheading time. However, if the actual travel time from his home to the point of duty assignment exceeds a reasonable travel time from the regular reporting point to the point of duty assignment, then only the latter period is counted. Of course, actual travel time must be reasonable and must not include diversions for personal reasons.

Example: Employee A receives an assignment from an ''extra board'' located at his home terminal to protect a job one hour's drive from the home terminal. In lieu of transporting the employee by carrier conveyance, the railroad pays the employee a fixed amount to provide his own transportation to and from the outlying point. The employee is permitted to go directly from his home to the outlying point, a drive which takes 40 minutes. The normal driving time between his regular reporting point at his home terminal and the outlying point is 60 minutes. The actual driving time, 40 minutes is considered deadhead time and is counted as time on duty under the Act.

Employee A performs local switching service at the outlying point. When the employee returns from the outlying point that evening, and receives an ''arbitrary'' payment for his making the return trip by private automobile, 40 minutes of his time in transportation home is considered deadheading to point of final release and is not counted as either time on duty or time off duty.

Wreck and relief trains. Prior to the 1976 amendments, crews of wreck and relief trains were exempted entirely from the limitations on hours of service. Under present law that is no longer the case. The crew of a wreck or relief train may be permitted to be on duty for not to exceed 4 additional hours in any period of 24 consecutive hours whenever an actual emergency exists and the work of the crew is related to that emergency. Thus, a crew could work up to 16 hours, rather than 12. The Act specifies that an emergency ceases to exist for purposes of this provision when the track is cleared and the line is open for traffic. An ''emergency'' for purposes of wreck or relief service may be a less extraordinary or catastrophic event than an ''unavoidable accident or Act of God'' under section 5(d) of the Act.

Example: The crew of a wreck train is dispatched to clear the site of a derailment which has just occurred on a main line. The wreck crew re-rails or clears the last car and the maintenance of way department releases the track to the operating department 14 hours and 30 minutes into the duty tour. Since the line is not clear until the wreck train is itself out of the way, the crew may

operate the wreck train to its terminal, provided this can be accomplished within the total of 16 hours on duty.

Emergencies. The Act contains no general exception using the term ''emergency'' with respect to train or engine service or related work. See ''casualties,'' etc., under ''General Provisions''.

COMMUNICATION OF TRAIN ORDERS

Covered Service. The handling of orders governing the movement of trains is the second type of covered service. This provision of the Act applies to any operator, train dispatcher or other employee who by the use of the telegraph, telephone, radio, or any other electical or mechanical device dispatches, reports, transmits, receives, or delivers orders pertaining to or affecting train movements.

The approach of the law is functional. Thus, though a yardmaster normally is not covered by this provision, a yardmaster or other employee who performs any of the specified service during a duty tour is subject to the limitations on service for that entire tour.

Limitations on hours. No employee who performs covered service involving communication of train orders may be required or permitted to remain on duty for more than nine hours, whether consecutive or in the aggregate, in any 24-hour period in any office, tower, station or place where two or more shifts are employed. Where only one shift is employed, the employee is restricted to 12 hours consecutively or in the aggregate during any 24-hour period.

The provision on emergencies, discussed below, may extend the permissible hours of employees performing this type of service.

Shifts. The term ''shift'' is not defined by the Act, but the legislative history of the 1969 amendments indicates that it means a tour of duty constituting a day's work for one or more employee performing the same class of work at the same station who are scheduled to begin and end work at the same time. The following are examples of this principle:

Scheduled Hours	Classification
7 a.m. to 3 p.m	1 shift.
7 a.m. to 12:30 p.m. 1:30 p.m. to 8 p.m. (Schedule for one employee including one hour lunch period).	Do.
7 a.m. to 3 p.m. 7 a.m. to 3 p.m. (Two employees scheduled).	Do.
7 a.m. to 3 p.m. 8 a.m. to 4 p.m. (Two employees scheduled).	2 shifts.

Duty time and effective periods of release. If, after reporting to his place of duty, an employee is required to perform duties at other places during this same tour of duty, the time spent traveling between such places is considered as time on duty. Under the traditional administrative interpretation of section 3, other periods of transportation are viewed as personal commuting and, thus, off-duty time.

A release period is considered off-duty time if it provides a meaningful period of relaxation and if the employee is free of all responsibilities to the carrier. One hour is the minimum acceptable release period for this type of covered service.

Emergencies. The section of the Act dealing with dispatchers, operators, and others who transmit or receive train orders contains its own emergency provision. In case of emergency, an employee subject to the 9 or 12-hour limitation is permitted to work an additional four hours in any 24-hour period, but only for a maximum of three days in any period of seven consecutive days. However, even in an emergency situation the carrier must make reasonable efforts to relieve the employee.

GENERAL PROVISIONS

(APPLICABLE TO ALL COVERED SERVICE)

Commingled Service. All duty time for a railroad even though not otherwise subject to the Act must be included when computing total on-duty time of an individual who performs one or more of the type of service covered by the Act. This is known as the principle of ''commingled service''.

For example, if an employee performs duty for 8 hours as a trainman and then is used as a trackman (not covered by the law) in the same 24-hour period, total on-duty time is determined by adding the duty time as trackman to that as trainman. The law does not distinguish treatment of situations in which non-covered service follows, rather than precedes, covered service. The limitations on total hours apply on both cases. It should be remembered that attendance at required rules classes is duty time subject to the provisions on ''commingling''. Similarly, where a carrier compels attendance at a disciplinary proceeding, time spent in attendance is subject to the provisions on commingling.

When an employee performs service covered by more than one restrictive provision, the most restrictive provision determines the total lawful on-duty time. Thus, when an employee performs duty in train or engine service and also as an operator, the provisions of the law applicable to operators apply to all on-duty and off-duty periods during such aggregate time. However, an employee subject to the 12 hour provision of section 2 of the law does not become subject to the 9 or 12-hour provisions of section 3 merely because he receives, transmits or delivers orders pertaining to or affecting the movement of his train in the course of his duties as a trainman.

Casualties, Unavoidable Accidents, Acts of God. Section 5(d) of the Act states the following: ''The provisions of this Act shall not apply in any case of casualty or unavoidable accident or the Act of God; nor where the delay was the result of a cause not known to the carrier or its officer or agent in charge of the employee at the time said employee left a terminal, and which could not have been foreseen.'' This passage is commonly referred to as the ''emergency provision''. Judicial construction of this sentence has limited the relief which it grants to situations which are truly unusual and exceptional. The courts have recognized that delays and operational difficulties are common in the industry and must be regarded as entirely foreseeable; otherwise, the Act will provide no protection whatsoever. Common operational difficulties which do not provide relief from the Act include, but are not limited to, broken draw bars, locomotive malfunctions, equipment failures, brake system failures, hot boxes, unexpected switching, doubling hills and meeting trains. Nor does the need to clear a main line or cut a crossing justify disregard of the limitations of the Act. Such contingencies must normally be anticipated and met within the 12 hours. Even where an extraordinary event or combination of events occurs which, by itself, would be sufficient to permit excess service, the carrier must still employ due diligence to avoid or limit such excess service. The burden of proof rests with the carrier to establish that excess service could not have been avoided.

Sleeping Quarters. Under the 1976 amendments to the Act it is unlawful for any common carrier to provide sleeping quarters for persons covered by the Hours of Service Act which do not afford such persons an opportunity for rest, free from interruptions caused by noise under the control of the railroad, in clean, safe, and sanitary quarters. Such sleeping quarters include crew quarters, camp or bunk cars, and trailers.

Sleeping quarters are not considered to be ''free from interruptions caused by noise under the control of the railroad'' if noise levels attributable to noise sources under the control of the railroad exceed an $L_{eq}(8)$ value of 55dB(A).

FRA recognizes that camp cars, either because of express limitations of local codes or by virtue of their physical mobility, cannot, for practical purposes, be subject to state or local housing, sanitation, health, electrical, or fire codes. Therefore, FRA is unable to rely upon state or local authorities to ensure that persons covered by the Act who reside in railroad-provided camp cars are afforded an opportunity for rest in ''clean, safe, and sanitary'' conditions. Accordingly, the guidelines in appendix C to this part 228 will be considered by FRA as factors to be used in applying the concepts of ''clean,'' ''safe,'' and ''sanitary'' to camp cars provided by railroads for the use of employees covered by section 2(a)(3) of the Act. Failure to adhere to these guidelines might interfere with the ordinary person's ability to rest.

Collective Bargaining. The Hours of Service Act prescribes the maximum permissible hours of service consistent with safety. However, the Act does not prohibit collective bargaining for shorter hours of service and time on duty.

Penalty. As amended by the Rail Safety Improvement Act of 1988 and the Rail Safety Enforcement and Review Act of 1992, the penalty provisions of the law apply to any person (an entity of any type covered under 1 U.S.C. 1, including but not limited to the following: a railroad; a manager, supervisor, official, or other employee or agent of a railroad; any owner, manufacturer, lessor, or lessee of railroad equipment, track, or facilities; any independent contractor providing goods or services to a railroad; and any employee of such owner, manufacturer, lessor, lessee, or independent contractor), except that a penalty may be assessed against an individual only for a willful violation. See appendix A to 49 CFR part 209. For violations that occurred on September 3, 1992, a person who violates the Act is liable for a civil penalty, as the Secretary of Transportation deems reasonable, in an amount not less than $500 nor more than $11,000, except that where a grossly negligent violation or a pattern of repeated violations has created an imminent hazard of death or injury to persons, or has caused death or injury, a penalty not to exceed $22,000 may be assessed. The Federal Civil Penalties Inflation Adjustment Act of 1990 as amended by the Debt Collection Improvement Act of 1996 required agencies to increase the maximum civil monetary penalty for inflation. The amounts increased from $10,000 to $11,000 and from $20,000 to $22,000 respectively. According to the same law, in 2004, the minimum penalty of $500 was raised to $550, and the maximum penalty for a grossly negligent violation or a pattern of repeated violations that has caused an imminent hazard of death or injury to individuals or has caused death or injury, was increased from $22,000 to $27,000. The $11,000 maximum penalty was not adjusted. Effective October 9, 2007, the ordinary maximum penalty of $11,000 was raised to $16,000 as required under the law; however, the minimum penalty and the maximum penalty for a grossly negligent violation did not need to be adjusted.

Each employee who is required or permitted to be on duty for a longer period than prescribed by law or who does not receive a required period of rest represents a separate and distinct violation and subjects the railroad to a separate civil penalty. In the case of a violation of section 2(a)(3) or (a)(4) of the Act, each day a facility is in noncompliance

constitutes a separate offense and subjects the railroad to a separate civil penalty.

In compromising a civil penalty assessed under the Act, FRA takes into account the nature, circumstances, extent, and gravity of the violation committed, and, with respect to the person found to have committed such violation, the degree of culpability, any history of prior or subsequent offenses, ability to pay, effect on ability to continue to do business and such other matters as justice may require.

Statute of limitations. No suit may be brought after the expiration of two years from the date of violation unless administrative notification of the violation has been provided to the person to be charged within that two year period. In no event may a suit be brought after expiration of the period specified in 28 U.S.C. 2462.

Exemptions. A railroad which employs not more than 15 persons covered by the Hours of Service Act (including signalmen and hostlers) may be exempted from the law's requirements by the FRA after hearing and for good cause shown. The exemption must be supported by a finding that it is in the public interest and will not adversely affect safety. The exemption need not relate to all carrier employees. In no event may any employee of an exempt railroad be required or permitted to work beyond 16 hours continuously or in the aggregate within any 24-hour period. Any exemption is subject to review at least annually.

[42 FR 27596, May 31, 1977, as amended at 43 FR 30804, July 18, 1978; 53 FR 28601, July 28, 1988; 55 FR 30893, July 27, 1990; 58 FR 18165, Apr. 8, 1993; 61 FR 20495, May 7, 1996; 63 FR 11622, Mar. 10, 1998; 69 FR 30594, May 28, 2004; 72 FR 51197, Sept. 6, 2007]

APPENDIX B TO PART 228—SCHEDULE OF CIVIL PENALTIES[1]

Section	Violation	Willful violation
Subpart B—Records and Reporting:		
228.9 Railroad records	$500	$1,000
228.11 Hours of duty records	500	1,000
228.17 Dispatcher's record	500	1,000
228.19 Monthly reports of excess service	1,000	2,000

[1] A penalty may be assessed against an individual only for a willful violation. The Administrator reserves the right to assess a penalty of up to $27,000 for any violation where circumstances warrant. See 49 CFR part 209, appendix A.

[53 FR 52931, Dec. 29, 1988, as amended at 69 FR 30594, May 28, 2004]

APPENDIX C TO PART 228—GUIDELINES FOR CLEAN, SAFE, AND SANITARY RAILROAD PROVIDED CAMP CARS

1. *Definitions applicable to these Guidelines.*

(a) *Camp Cars* mean trailers and on-track vehicles, including outfit, camp, or bunk cars or modular homes mounted on flat cars, used to house or accommodate railroad employees. Wreck trains are not included.

(b) *Employee* means any worker whose service is covered by the Hours of Service Act or who is defined as an employee for purposes of section 2(a)(3) of that Act.

(c) *Lavatory* means a basin or similar vessel used primarily for washing of the hands, arms, face, and head.

(d) *Nonwater carriage toilet facility* means a toilet facility not connected to a sewer.

(e) *Number of employees* means the number of employees assigned to occupy the camp cars.

(f) *Personal service room* means a room used for activities not directly connected with the production or service function performed by the carrier establishment. Such activities include, but are not limited to, first-aid, medical services, dressing, showering, toilet use, washing, and eating.

(g) *Potable water* means water that meets the quality standards prescribed in the U.S. Public Health Service Drinking Water Standards, published at 42 CFR part 72, or is approved for drinking purposes by the State or local authority having jurisdiction.

(h) *Toilet facility* means a fixture maintained within a toilet room for the purpose of defecation or urination, or both.

(i) *Toilet room* means a room maintained within or on the premises containing toilet facilities for use by employees.

(j) *Toxic material* means a material in concentration or amount of such toxicity as to constitute a recognized hazard that is causing or is likely to cause death or serious physical harm.

(k) *Urinal* means a toilet facility maintained within a toilet room for the sole purpose of urination.

(l) *Water closet* means a toilet facility maintained within a toilet room for the purpose of both defecation and urination and which is flushed with water.

(m) *Leq* (8) means the equivalent steady sound level which in 8 hours would contain the same acoustic energy as the time-varying sound level during the same time period.

2. *Housekeeping.*

(a) All camp cars should be kept clean to the extent that the nature of the work allows.

(b) To facilitate cleaning, every floor, working place, and passageway should be kept free from protruding nails, splinters, loose boards, and unnecessary holes and openings.

3. *Waste Disposal.*

(a) Any exterior receptacle used for putrescible solid or liquid waste or refuse should be so constructed that it does not leak and may be thoroughly cleaned and maintained in a sanitary condition. Such a receptacle should be equipped with a solid tight-fitting cover, unless it can be maintained in a sanitary condition without a cover. This requirement does not prohibit the use of receptacles designed to permit the maintenance of a sanitary condition without regard to the aforementioned requirements.

(b) All sweepings, solid or liquid wastes, refuse, and garbage should be removed in such a manner as to avoid creating a menace to health and as often as necessary or appropriate to maintain a sanitary condition.

4. *Vermin Control.*

(a) Camp cars should be so constructed, equipped, and maintained, so far as reasonably practicable, as to prevent the entrance or harborage of rodents, insects, or other vermin. A continuing and effective extermination program should be instituted where their presence is detected.

5. *Water Supply.*

(a) Potable water. (1) Potable water should be adequately and conveniently provided to all employees in camp cars for drinking, washing of the person, cooking, washing of foods, washing of cooking or eating utensils, washing of food preparation or processing premises, and personal service rooms where such facilities are provided.

(2) Potable drinking water dispensers should be designed, constructed, and serviced so that sanitary conditions are maintained, should be capable of being closed, and should be equipped with a tap.

(3) Open containers such as barrels, pails, or tanks for drinking water from which the water must be dipped or poured, whether or not they are fitted with a cover, should not be used.

(4) A common drinking cup and other common utensils should not be used.

(b) The distribution lines should be capable of supplying water at sufficient operating pressures to all taps for normal simultaneous operation.

6. *Toilet facilities.*

(a) Toilet facilities. (1) Toilet facilities adequate for the number of employees housed in the camp car should be provided in convenient and safe location(s), and separate toilet rooms for each sex should be provided in accordance with table 1 of this paragraph. The number of facilities to be provided for each sex should be based on the number of employees of that sex for whom the facilities are furnished. Where toilet rooms will be occupied by no more than one person at a time, can be locked from the inside, and contain at least one water closet or nonwater carriage toilet facility, separate toilet rooms for each sex need not be provided. Where such single-occupancy rooms have more than one toilet facility, only one such facility in each toilet room should be counted for the purpose of table 1.

TABLE 1

No. of employees	Minimum No. of toilet facilities [1]
1 to 10	1
11 to 25	2
26 to 49	3
50 to 100	5
Over 100	[2]

[1] Where toilet facilities will not be used by women, urinals may be provided instead of water closets or nonwater carriage toilet facilities, except that the number of water closets or facilities in such cases should not be reduced to less than ⅔ of the minimum specified.

[2] One additional fixture for each additional 25 employees.

(2) When toilet facilities are provided in separate cars, toilet rooms should have a window space of not less than 6 square feet in area opening directly to the outside area or otherwise be satisfactorily ventilated. All outside openings should be screened with material that is equivalent to or better than 16-mesh. No fixture, water closet, nonwater carriage toilet facility or urinal should be located in a compartment used for other than toilet purposes.

(3) The sewage disposal method should not endanger the health of employees.

(b) *Construction of toilet rooms.* (1) Each water closet should occupy a separate compartment with a door and walls or partitions between fixtures sufficiently high to assure privacy.

(2) Nonwater carriage toilet facilities should be located within 50 feet, but as far as practical on the same side of the track on which camp cars are sited.

(3) Each toilet facility should be lighted naturally, or artificially by a safe type of lighting available at all hours of the day and night. Flashlights can be substituted by the railroad when nonwater carriage toilet facilities are used.

(4) An adequate supply of toilet paper should be provided in each water closet, or nonwater carriage toilet facility, unless provided to the employees individually.

(5) Toilet facilities should be kept in a clean and sanitary condition. They should be cleaned regularly when occupied. In the case of nonwater carriage toilet facilities, they should be cleaned and changed regularly.

7. *Lavatories.*

(a) Lavatories should be made available to all rail employees housed in camp cars.

(b) Each lavatory should be provided with either hot and cold running water or tepid running water.

(c) Unless otherwise provided by agreement, hand soap or similar cleansing agents should be provided.

(d) Unless otherwise provided by agreement, individual hand towels or sections thereof, of cloth or paper, warm air blowers or clean individual sections of continuous cloth toweling, convenient to the lavatories, should be provided.

(e) One lavatory basin per six employees should be provided in shared facilities.

8. *Showering facilities.*

(a) Showering facilities should be provided in the following ratio: one shower should be provided for each 10 employees of each sex, or numerical fraction thereof, who are required to shower during the same shift.

(b) Shower floors should be constructed of non-slippery materials. Floor drains should be provided in all shower baths and shower rooms to remove waste water and facilitate cleaning. All junctions of the curbing and the floor should be sealed. The walls and partitions of shower rooms should be smooth and impervious to the height of splash.

(c) An adequate supply of hot and cold running water should be provided for showering purposes. Facilities for heating water should be provided.

(d) *Showers.* 1. Unless otherwise provided by agreement, body soap or other appropriate cleansing agent convenient to the showers should be provided.

2. Showers should be provided with hot and cold water feeding a common discharge line.

3. Unless otherwise provided by agreement, employees who use showers should be provided with individual clean towels.

9. *Kitchens, dining hall and feeding facilities.*

(a) In all camp cars where central dining operations are provided, the food handling facilities should be clean and sanitary.

(b) When separate kitchen and dining hall cars are provided, there should be a closable door between the living or sleeping quarters into a kitchen or dining hall car.

10. *Consumption of food and beverages on the premises.*

(a) *Application.* This paragraph should apply only where employees are permitted to consume food or beverages, or both, on the premises.

(b) *Eating and drinking areas.* No employee should be allowed to consume food or beverages in a toilet room or in any area exposed to a toxic material.

(c) *Sewage disposal facilities.* All sewer lines and floor drains from camp cars should be connected to public sewers where available and practical, unless the cars are equipped with holding tanks that are emptied in a sanitary manner.

(d) *Waste disposal containers provided for the interior of camp cars.* An adequate number of receptacles constructed of smooth, corrosion resistant, easily cleanable, or disposable materials, should be provided and used for the disposal of waste food. Receptacles should be provided with a solid tightfitting cover unless sanitary conditions can be maintained without use of a cover. The number, size and location of such receptacles should encourage their use and not result in overfilling. They should be emptied regularly and maintained in a clean and sanitary condition.

(e) *Sanitary storage.* No food or beverages should be stored in toilet rooms or in an area exposed to a toxic material.

(f) *Food handling.* (1) All employee food service facilities and operations should be carried out in accordance with sound hygienic principles. In all places of employment where all or part of the food service is provided, the food dispensed should be wholesome, free from spoilage, and should be processed, prepared, handled, and stored in such a manner as to be protected against contamination.

(2) No person with any disease communicable through contact with food or food preparation items should be employed or permitted to work in the preparation, cooking, serving, or other handling of food, foodstuffs, or materials used therein, in a kitchen or dining facility operated in or in connection with camp cars.

11. *Lighting.* Each habitable room in a camp car should be provided with adequate lighting.

12. *First Aid.* Adequate first aid kits should be maintained and made available for railway employees housed in camp cars for the emergency treatment of injured persons.

13. *Shelter.*

(a) Every camp car should be constructed in a manner that will provide protection against the elements.

(b) All steps, entry ways, passageways and corridors providing normal entry to or between camp cars should be constructed of durable weather resistant material and properly maintained. Any broken or unsafe fixtures or components in need of repair should be repaired or replaced promptly.

(c) Each camp car used for sleeping purposes should contain at least 48 square feet of floor space for each occupant. At least a 7-foot ceiling measured at the entrance to the car should be provided.

(d) Beds, cots, or bunks and suitable storage facilities such as wall lockers or space for foot lockers for clothing and personal articles should be provided in every room used for sleeping purposes. Except where partitions are provided, such beds or similar facilities should be spaced not closer than 36 inches laterally (except in modular units which cannot be spaced closer than 30 inches) and 30 inches end to end, and should be elevated at least 12 inches from the floor. If double-deck bunks are used, they should be spaced not less than 48 inches both laterally and end to end. The minimum clear space between the lower and upper bunk should be not less than 27 inches. Triple-deck bunks should not be used.

(e) Floors should be of smooth and tight construction and should be kept in good repair.

(f) All living quarters should be provided with windows the total of which should be not less than 10 percent of the floor area. At least one-half of each window designed to be opened should be so constructed that it can be opened for purposes of ventilation. Durable opaque window coverings should be provided to reduce the entrance of light during sleeping hours.

(g) All exterior openings should be effectively screened with 16-mesh material. All screen doors should be equipped with self-closing devices.

(h) In a facility where workers cook, live, and sleep, a minimum of 90 square feet per person should be provided. Sanitary facilities should be provided for storing and preparing food.

(i) In camp cars where meals are provided, adequate facilities to feed employees within a 60-minute period should be provided.

(j) All heating, cooking, ventilation, air conditioning and water heating equipment should be installed in accordance with applicable local regulations governing such installations.

(k) Every camp car should be provided with equipment capable of maintaining a temperature of at least 68 degrees F. during normal cold weather and no greater than 78 degrees F., or 20 degrees below ambient, whichever is warmer, during normal hot weather.

(l) Existing camp cars may be grandfathered so as to only be subject to subparagraphs (c), (d), (f), (h), and (k), in accordance with the following as recommended maximums:

13 (c), (d), and (h)—by January 1, 1994.

13(f)—Indefinitely insofar as the ten percent (10%) requirement for window spacing is concerned.

13(k)—by January 1, 1992.

14. *Location*. Camp cars occupied exclusively by individuals employed for the purpose of maintaining the right-of-way of a railroad should be located as far as practical from where ''switching or humping operations'' of ''placarded cars'' occur, as defined in 49 CFR 228.101 (c)(3) and (c)(4), respectively. Every reasonable effort should be made to locate these camp cars at least one-half mile (2,640 feet) from where such switching or humping occurs. In the event employees housed in camp cars located closer than one-half mile (2,640 feet) from where such switching or humping of cars takes place are exposed to an unusual hazard at such location, the employees involved should be housed in other suitable accommodations. An unusual hazard means an unsafe condition created by an occurrence other than normal switching or humping.

15. *General provisions*. (a) Sleeping quarters are not considered to be ''free of interruptions caused by noise under the control of the railroad'' if noise levels attributable to noise sources under the control of the railroad exceed an Leq (8) value of 55 dB(A), with windows closed and exclusive of cooling, heating, and ventilating equipment.

(b) A railroad should, within 48 hours after notice of noncompliance with these recommendations, fix the deficient condition(s). Where holidays or weekends intervene, the railroad should fix the condition within 8 hours after the employees return to work. In the event such condition(s) affects the safety or health of the employees, such as water, cooling, heating or eating facilities, the railroad should provide alternative arrangements for housing and eating until the noncomplying condition is fixed.

[55 FR 30893, July 27, 1990]

PART 229—RAILROAD LOCOMOTIVE SAFETY STANDARDS

Subpart A—General

Sec.
229.1 Scope.
229.3 Applicability.
229.4 Information collection.
229.5 Definitions.
229.7 Prohibited acts.
229.9 Movement of non-complying locomotives.
229.11 Locomotive identification.
229.13 Control of locomotives.
229.14 Non-MU control cab locomotives.
229.17 Accident reports.
229.19 Prior waivers.

Subpart B—Inspections and Tests

229.21 Daily inspection.
229.23 Periodic inspection: General.
229.25 Tests: Every periodic inspection.
229.27 Annual tests.
229.29 Biennial tests.
229.31 Main reservoir tests.
229.33 Out-of-use credit.

Subpart C—Safety Requirements

GENERAL REQUIREMENTS

229.41 Protection against personal injury.
229.43 Exhaust and battery gases.
229.45 General condition.

BRAKE SYSTEM

229.46 Brakes: General.
229.47 Emergency brake valve.
229.49 Main reservoir system.
229.51 Aluminum main reservoirs.
229.53 Brake gauges.
229.55 Piston travel.

229.57 Foundation brake gear.
229.59 Leakage.

DRAFT SYSTEM

229.61 Draft system.

SUSPENSION SYSTEM

229.63 Lateral motion.
229.64 Plain bearings.
229.65 Spring rigging.
229.67 Trucks.
229.69 Side bearings.
229.71 Clearance above top of rail.
229.73 Wheel sets.
229.75 Wheel and tire defects.

ELECTRICAL SYSTEM

229.77 Current collectors.
229.79 Third rail shoes.
229.81 Emergency pole; shoe insulation.
229.83 Insulation or grounding of metal parts.
229.85 Doors and cover plates marked ''Danger''.
229.87 Hand-operated switches.
229.89 Jumpers; cable connections.
229.91 Motors and generators.

INTERNAL COMBUSTION EQUIPMENT

229.93 Safety cut-off device.
229.95 Venting.
229.97 Grounding fuel tanks.
229.99 Safety hangers.
229.101 Engines.

STEAM GENERATORS

229.103 Safe working pressure; factor of safety.
229.105 Steam generator number.
229.107 Pressure gauge.
229.109 Safety valves.
229.111 Water-flow indicator.
229.113 Warning notice.

CABS AND CAB EQUIPMENT

229.115 Slip/slide alarms.
229.117 Speed indicators.
229.119 Cabs, floors, and passageways.
229.121 Locomotive cab noise.
229.123 Pilots, snowplows, end plates.
229.125 Headlights and auxiliary lights.
229.127 Cab lights.
229.129 Locomotive horn.
229.131 Sanders.
229.133 Interim locomotive conspicuity measures—auxiliary external lights.
229.135 Event recorders.
229.137 Sanitation, general requirements.
229.139 Sanitation, servicing requirements.

Subpart D—Locomotive Crashworthiness Design Requirements

229.141 Body structure, MU locomotives.
229.201 Purpose and scope.
229.203 Applicability.
229.205 General requirements.
229.206 Design requirements.
229.207 New locomotive crashworthiness design standards and changes to existing FRA-approved locomotive crashworthiness design standards.
229.209 Alternative locomotive crashworthiness designs.
229.211 Processing of petitions.
229.213 Locomotive manufacturing information.
229.215 Retention and inspection of designs.
229.217 Fuel tank.

APPENDIX A TO PART 229—FORM FRA 6180–49A [NOTE]
APPENDIX B TO PART 229—SCHEDULE OF CIVIL PENALTIES
APPENDIX C TO PART 229—FRA LOCOMOTIVE STANDARDS—CODE OF DEFECTS [NOTE]
APPENDIX D TO PART 229—CRITERIA FOR CERTIFICATION OF CRASHWORTHY EVENT RECORDER MEMORY MODULE
APPENDIX E TO PART 229—PERFORMANCE CRITERIA FOR LOCOMOTIVE CRASHWORTHINESS
APPENDIXES F–G TO PART 229 [RESERVED]
APPENDIX H TO PART 229—STATIC NOISE TEST PROTOCOLS—IN-CAB STATIC

AUTHORITY: 49 U.S.C. 20103, 20107, 20133, 20137–38, 20143, 20701–03, 21301–02, 21304; 28 U.S.C. 2401, note; and 49 CFR 1.49(c), (m).

SOURCE: 45 FR 21109, Mar. 31, 1980, unless otherwise noted.

Subpart A—General

§ 229.1 Scope.

This part prescribes minimum Federal safety standards for all locomotives except those propelled by steam power.

§ 229.3 Applicability.

(a) Except as provided in paragraphs (b) through (e) of this section, this part applies to all standard gage railroads.

(b) This part does not apply to:

(1) A railroad that operates only on track inside an installation which is not part of the general railroad system of transportation; or

(2) Rapid transit operations in an urban area that are not connected with the general railroad system of transportation.

(c) Paragraphs (a) and (b) of § 229.125 do not apply to Tier II passenger equipment as defined in § 238.5 of this chapter (*i.e.*, passenger equipment operating at speeds exceeding 125 mph but not exceeding 150 mph).

(d) On or after November 8, 1999, paragraphs (a)(1) and (b)(1) of § 229.141 do not apply to ''passenger equipment'' as defined in § 238.5 of this chapter, unless such equipment is excluded from the requirements of §§ 238.203 through 238.219, and § 238.223 of this chapter by operation of § 238.201(a)(2) of this chapter.

(e) Paragraphs (a)(2) through (a)(4), and (b)(2) through (b)(4) of § 229.141 do not apply to ''passenger equipment'' as defined in § 238.5 of this chapter that is placed in service for the first time on or after September 8, 2000, unless such equipment is excluded from the requirements of §§ 238.203 through 238.219, and § 238.223 of this chapter by operation of § 238.201(a)(2) of this chapter.

[54 FR 33229, Aug. 14, 1989, as amended at 64 FR 25659, May 12, 1999]

§ 229.4 Information collection.

(a) The information collection requirements in this part have been reviewed by the Office of Management and Budget pursuant to the Paperwork Reduction Act of 1980, Public Law 96–511, and have been assigned OMB control number 2130–0004.

(b) The information collection requirements are found in the following sections: §§ 229.9, 229.17, 229.21, 229.23, 229.25, 229.27, 229.29, 229.31, 229.33, 229.55, 229.103, 229.105, 229.113, 229.121, 229.135, and appendix H to part 229.

[50 FR 6953, Feb. 19, 1985, as amended at 58 FR 36613, July 8, 1993; 71 FR 63136, Oct. 27, 2006]

§ 229.5 Definitions.

As used in this part—

AAR means the Association of American Railroads.

Acceptable quality level (AQL). The AQL is expressed in terms of percent defective or defects per 100 units. Lots having a quality level equal to a specified AQL will be accepted approximately 95 percent of the time when using the sampling plans prescribed for that AQL.

Anti-climbers means the parts at the ends of adjoining rail vehicles in a train that are designed to engage when subjected to large buff loads to prevent the override of one vehicle by another.

Associate Administrator for Safety means the Associate Administrator for Safety, Federal Railroad Administration, or that person's delegate as designated in writing.

Break means a fracture resulting in complete separation into parts.

Build date means the date on which the completed locomotive is shipped by the manufacturer or remanufacturer to the customer, or if the railroad manufactures or remanufactures the locomotive itself, the date on which the locomotive is released from the manufacture or remanufacture facility.

Cab means that portion of the superstructure designed to be occupied by the crew operating the locomotive.

Carrier means *railroad*, as that term is in this section.

Collision posts means structural members of the end structures of a rail vehicle that extend vertically from the underframe to which they are securely attached and that provide protection to occupied compartments from an object penetrating the vehicle during a collision.

Corner posts means structural members located at the intersection of the front or rear surface with the side surface of a rail vehicle and which extend vertically from the underframe to the roof.

Commuter service means the type of railroad service described under the heading ''Commuter Operations'' in 49 CFR part 209, Appendix A.

Commuter work train is a non-revenue service train used in the administration and upkeep service of a commuter railroad.

Control cab locomotive means a locomotive without propelling motors but with one or more control stands.

Controlling remote distributed power locomotive means the locomotive in a distributed power consist that receives the coded signal from the lead locomotive consist of the train whether commanded automatically by the distributed power system or manually by the locomotive engineer.

Crack means a fracture without complete separation into parts, except that castings with shrinkage cracks or hot tears that do not significantly diminish the strength of the member are not considered to be cracked.

Cruise control means a device that controls locomotive power output to obtain a targeted speed. A device that functions only at or below 30 miles per hour is NOT considered a ''cruise control'' for purposes of this part.

Data element means one or more data point or value reflecting on-board train operations at a particular time. Data may be actual or ''passed through'' values or may be derived from a combination of values from other sources.

dB(A) means the sound pressure level in decibels measured on the A-weighted scale.

Dead locomotive means—

(1) A locomotive, other than a control cab locomotive, that does not have any traction device supplying tractive power; or

(2) A control cab locomotive that has a locked and unoccupied cab.

Decibel (dB) means a unit of measurement of sound pressure levels.

Defective means, for purposes of section 229.129 of this part, a locomotive equipped with an audible warning device that produces a maximum sound level in excess of 110 dB(A) and/or a minimum sound level below 96 dB(A), as measured 100 feet forward of the locomotive in the direction of travel.

Designated service means exclusive operation of a locomotive under the following conditions:

(1) The locomotive is not used as an independent unit or the controlling unit in a consist of locomotives except when moving for the purposes of servicing or repair within a single yard area;

(2) The locomotive is not occupied by operating or deadhead crews outside a single yard area; and

(3) The locomotive is stenciled ''Designated Service—DO NOT OCCUPY.''

Design standard means a criterion adopted by an industry or voluntary consensus standards body, which addresses the design of a locomotive with respect to its crashworthiness and crashworthiness features.

Distributed power system means a system that provides control of a number of locomotives dispersed throughout a train from a controlling locomotive located in the lead position. The system provides control of the rearward locomotives by command signals originating at the lead locomotive and transmitted to the remote (rearward) locomotives.

DMU locomotive means a diesel-powered multiple unit operated locomotive with one or more propelling motors designed to carry passenger traffic.

Excessive noise report means a report by a locomotive cab occupant that the locomotive is producing an unusual level of noise that significantly interferes with normal cab communications or that is a concern with respect to hearing conservation.

Electronic air brake means a brake system controlled by a computer which provides the means for control of the locomotive brakes or train brakes or both.

Event recorder means a device, designed to resist tampering, that monitors and records data, as detailed in § 229.135(b), over the most recent 48 hours of operation of the electrical system of the locomotive on which the device is installed. However, a device, designed to resist tampering, that monitors and records the specified data only when the locomotive is in motion meets this definition if the device was installed prior to November 5, 1993 and if it records the specified data for the last eight hours the locomotive was in motion.

Event recorder memory module means that portion of the event recorder used to retain the recorded data as detailed in § 229.135(b).

FRA means the Federal Railroad Administration.

Fuel tank, external means a fuel containment vessel that extends outside the car body structure of a locomotive.

Fuel tank, internal means a fuel containment vessel that does not extend outside the car body structure of a locomotive.

High voltage means an electrical potential of more than 150 volts.

Initial terminal means a location where a train is originally assembled.

In-service event recorder means an event recorder that was successfully tested as prescribed in § 229.27(d) and whose subsequent failure to operate as intended, if any, is not actually known by the railroad operating the locomotive on which it is installed.

Lateral means the horizontal direction perpendicular to the direction of travel.

Lead locomotive means the first locomotive proceeding in the direction of movement.

Lite locomotive means a locomotive or a consist of locomotives not attached to any piece of equipment or attached only to a caboose.

Locomotive means a piece of on-track equipment other than hi-rail, specialized maintenance, or other similar equipment—

(1) With one or more propelling motors designed for moving other equipment;

(2) With one or more propelling motors designed to carry freight or passenger traffic or both; or

(3) Without propelling motors but with one or more control stands.

Locomotive cab means the compartment or space on board a locomotive where the control stand is located and which is normally occupied by the engineer when the locomotive is operated.

Longitudinal means in a direction parallel to the normal direction of travel.

Lot means a collection of locomotives, equipped with the same horn model, configuration, and location, and the same air pressure and delivery system, which has been manufactured or processed under essentially the same conditions.

Mandatory directive means any movement authority or speed restriction that affects a railroad operation.

Manufacture means the act of constructing a locomotive.

Modesty lock means a latch that can be operated in the normal manner only from within the sanitary compartment, that is designed to prevent entry of another person when the sanitary compartment is in use. A modesty lock may be designed to allow deliberate forced entry in the event of an emergency.

Monocoque design locomotive means a locomotive design where the shell or skin acts as a single unit with the supporting frame to resist and transmit the loads acting on the locomotive.

MU locomotive means a multiple unit operated electric locomotive—

(1) With one or more propelling motors designed to carry freight or passenger traffic or both; or

(2) Without propelling motors but with one or more control stands and a means of picking-up primary power such as a pantograph or third rail.

Narrow-nose locomotive means a locomotive with a short hood that spans substantially less than the full width of the locomotive.

Occupied service means the operation of a locomotive when the cab is physically occupied by a person.

Other short-haul passenger service means the type of railroad service described under the heading ''Other short-haul passenger service'' in 49 CFR part 209, Appendix A.

Permanent deformation means the undergoing of a permanent change in shape of a structural member of a rail vehicle.

Potable water means water that meets the requirements of 40 CFR part 141, the Environmental Protection Agency's Primary Drinking Water Regulations, or water that has been approved for drinking and washing purposes by the pertinent state or local authority having jurisdiction. For purposes of this part, commercially available, bottled drinking water is deemed potable water.

Powered axle is an axle equipped with a traction device.

Power car means a rail vehicle that propels a Tier II passenger train or is the lead vehicle in a Tier II passenger train, or both.

Railroad means all forms of non-highway ground transportation that run on rails or electromagnetic guideways, including:

(1) Commuter or other short-haul rail passenger service in a metropolitan or suburban area, and

(2) High speed ground transportation systems that connect metropolitan areas, without regard to whether they use new technologies not associated with traditional railroads. Such term does not include rapid transit operations within an urban area that are not connected to the general railroad system of transportation.

Remanufacture means the act of constructing a remanufactured locomotive.

Remanufactured locomotive means a locomotive rebuilt or refurbished from a previously used or refurbished underframe (''deck''), containing fewer than 25% previously used components (measured by dollar value of the components). For calculation purposes, the percentage of previously used components is determined with equivalent value of new parts and is calculated using dollar values from the same year as the new parts used to remanufacture the locomotive.

Roof rail means the longitudinal structural member at the intersection of the side wall and the roof sheathing.

Sand delivery system means a permanently stationed or fixed device designed to deliver sand to locomotive sand boxes that do not require the sand to be manually delivered or loaded. A sand delivery system will be considered permanently stationed if it is at a location at least five days a week for at least eight hours per day.

Sanitary means lacking any condition in which any significant amount of filth, trash, or human waste is present in such a manner that a reasonable person would believe that the condition might constitute a health hazard; or of strong, persistent, chemical or human waste odors sufficient to deter use of the facility, or give rise to a reasonable concern with respect to exposure to hazardous fumes. Such conditions include, but are not limited to, a toilet bowl filled with human waste, soiled toilet paper, or other products used in the toilet compartment, that are present due to a defective toilet facility that will not flush or otherwise remove waste; visible human waste residue on the floor or toilet seat that is present due to a toilet that overflowed; an accumulation of soiled paper towels or soiled toilet paper on the floor, toilet facility, or sink; an accumulation of visible dirt or human waste on the floor, toilet facility, or sink; and strong, persistent chemical or human waste odors in the compartment.

Sanitation compartment means an enclosed compartment on a railroad locomotive that contains a toilet facility for employee use.

Self-monitoring event recorder means an event recorder that has the ability to monitor its own operation and to display an indication to the locomotive operator when any data required to be stored are not stored or when the stored data do not match the data received from sensors or data collection points.

Semi-monocoque design locomotive means a locomotive design where the skin or shell acts, to some extent, as a single unit with the supporting frame to resist and transmit the loads acting on the locomotive.

Semi-permanently coupled means coupled by means of a drawbar or other coupling mechanism that requires tools to perform the uncoupling operation.

Serious injury means an injury that results in the amputation of any appendage, the loss of sight in an eye, the fracture of a bone, or confinement in a hospital for a period of more than 24 consecutive hours.

Short hood means the part of the locomotive above the underframe located between the cab and the nearest end of the locomotive.

Standards body means an industry and/or professional organization or association which conducts research and develops and/or issues policies, criteria, principles, and standards related to the rail industry.

Switching service means the classification of railroad freight and passenger cars according to commodity or destination; assembling cars for train movements; changing the position of cars for purposes of loading, unloading, or weighing; placing locomotives and cars for repair or storage; or moving rail equipment in connection with work service that does not constitute a train movement.

Throttle position means any and all of the discrete output positions indicating the speed/tractive effort characteristic requested by the operator of the locomotive on which the throttle is installed. Together, the discrete output positions shall cover the entire range of possible speed/tractive effort characteristics. If the throttle has continuously variable segments, the event recorder shall capture either:

(1) The exact level of speed/tractive effort characteristic requested, on a scale of zero (0) to one hundred percent (100%) of the output variable or

(2) A value converted from a percentage to a comparable 0 to 8 digital signal.

Tier II means operating at speeds exceeding 125 mph but not exceeding 150 mph.

Time means either ''time-of-day'' or ''elapsed time'' (from an arbitrarily determined event) as determined by the manufacturer. In either case, the recorder must be able to convert to an accurate time-of-day with the time zone stated unless it is Greenwich mean time (UTC).

Toilet facility means a system that automatically or on command of the user removes human waste to a place where it is treated, eliminated, or retained such that no solid or non-treated liquid waste is thereafter permitted to be released into the bowl, urinal, or room and that prevents harmful discharges of gases or persistent offensive odors.

Transfer service means a freight train that travels between a point of origin and a point of final destination not exceeding 20 miles and that is not performing switching service.

Ultimate strength means the load at which a structural member fractures or ceases to resist any load.

Unsanitary means having any condition in which any significant amount of filth, trash, or human waste is present in such a manner that a reasonable person would believe that the condition might constitute a health hazard; or strong, persistent, chemical or human waste odors sufficient to deter use of the facility, or give rise to a reasonable concern with respect to exposure to hazardous fumes. Such conditions include, but are not limited to, a toilet bowl filled with human waste, soiled toilet paper, or other products used in the toilet compartment, that are present due to a defective toilet facility that will not flush or otherwise remove waste; visible human waste residue on the floor or toilet seat that is present due to a toilet that overflowed; an accumulation of soiled paper towels or soiled toilet paper on the floor, toilet facility, or sink; an accumulation of visible dirt or human waste on the floor, toilet facility, or sink; and strong, persistent chemical or human waste odors in the compartment.

Upper 99% confidence limit means the noise level below which 99% of all noise level measurements must lie.

Washing system means a system for use by railroad employees to maintain personal cleanliness that includes a secured sink or basin, water, antibacterial soap, and paper towels; or antibacterial waterless soap and paper towels; or antibacterial moist towelettes and paper towels; or any other combination of suitable antibacterial cleansing agents.

Wide-nose locomotive means a locomotive with a short hood that spans the full width of the locomotive.

[70 FR 37938, June 30, 2005, as amended at 71 FR 36911, June 28, 2006; 71 FR 47666, Aug. 17, 2006; 71 FR 61857, Oct. 19, 2006; 71 FR 63136, Oct. 27, 2006; 72 FR 59223, Oct. 19, 2007]

§ 229.7 Prohibited acts.

(a) The Locomotive Inspection Act (45 U.S.C. 22–34) makes it unlawful for any carrier to use or permit to be used on its line any locomotive unless the entire locomotive and its appurtenances—

(1) Are in proper condition and safe to operate in the service to which they are put, without unnecessary peril to life or limb; and

(2) Have been inspected and tested as required by this part.

(b) Any person (an entity of any type covered under 1 U.S.C. 1, including but not limited to the following: a railroad; a manager, supervisor, official, or other employee or agent of a railroad; any owner, manufacturer, lessor, or lessee of railroad equipment, track, or facilities; any independent contractor providing goods or services to a railroad; and any employee of such owner, manufacturer, lessor, lessee, or independent contractor) who violates any requirement of this part or of the Locomotive Inspection Act or causes the violation of any such requirement is subject to a civil penalty of at least $550 and not more than $16,000 per violation, except that: Penalties may be assessed against individuals only for willful violations, and, where a grossly

negligent violation or a pattern of repeated violations has created an imminent hazard of death or injury to persons, or has caused death or injury, a penalty not to exceed $27,000 per violation may be assessed. Each day a violation continues shall constitute a separate offense. See appendix B to this part for a statement of agency civil penalty policy.

[45 FR 21109, Mar. 31, 1980, as amended at 53 FR 28601, July 28, 1988; 53 FR 52931, Dec. 29, 1988; 63 FR 11622, Mar. 10, 1998; 69 FR 30594, May 28, 2004; 72 FR 51197, Sept. 6, 2007]

§ 229.9 Movement of non-complying locomotives.

(a) Except as provided in paragraphs (b), (c), § 229.125(g), and § 229.131(b) and (c)(1), a locomotive with one or more conditions not in compliance with this part may be moved only as a lite locomotive or a dead locomotive after the carrier has complied with the following:

(1) A qualified person shall determine—

(i) That it is safe to move the locomotive; and

(ii) The maximum speed and other restrictions necessary for safely conducting the movement;

(2)(i) The engineer in charge of the movement of the locomotive shall be notified in writing and inform all other crew members in the cab of the presence of the non-complying locomotive and the maximum speed and other restrictions determined under paragraph (a)(1)(ii) of this section.

(ii) A copy of the tag described in paragraph (a)(3) of this section may be used to provide the notification required by paragraph (a)(2)(i) of this section.

(3) A tag bearing the words ''non-complying locomotive'' and containing the following information, shall be securely attached to the control stand on each MU or control cab locomotive and to the isolation switch or near the engine start switch on every other type of locomotive—

(i) The locomotive number;

(ii) The name of the inspecting carrier;

(iii) The inspection location and date;

(iv) The nature of each defect;

(v) Movement restrictions, if any;

(vi) The destination; and

(vii) The signature of the person making the determinations required by this paragraph.

(b) A locomotive that develops a non-complying condition enroute may continue to utilize its propelling motors, if the requirements of paragraph (a) are otherwise fully met, until the earlier of—

(1) The next calendar day inspection, or

(2) The nearest forward point where the repairs necessary to bring it into compliance can be made.

(c) A non-complying locomotive may be moved lite or dead within a yard, at speeds not in excess of 10 miles per hour, without meeting the requirements of paragraph (a) of this section if the movement is solely for the purpose of repair. The carrier is responsible to insure that the movement may be safely made.

(d) A dead locomotive may not continue in use following a calendar day inspection as a controlling locomotive or at the head of a train or locomotive consist.

(e) A locomotive does not cease to be a locomotive because its propelling motor or motors are inoperative or because its control jumper cables are not connected.

(f) Nothing in this section authorizes the movement of a locomotive subject to a Special Notice for Repair unless the movement is made in accordance with the restrictions contained in the Special Notice.

(g) Paragraphs (a), (b), and (c) of this section shall not apply to sanitation conditions covered by §§ 229.137 and 229.139. Sections 229.137 and 229.139 set forth specific requirements for the movement and repair of locomotives with defective sanitation compartments.

[45 FR 21109, Mar. 31, 1980, as amended at 61 FR 8887, Mar. 6, 1996; 67 FR 16050, Apr. 4, 2002; 72 FR 59223, Oct. 19, 2007]

§ 229.11 Locomotive identification.

(a) The letter ''F'' shall be legibly shown on each side of every locomotive near the end which for identification purposes will be known as the front end.

(b) The locomotive number shall be displayed in clearly legible numbers on each side of each locomotive.

§ 229.13 Control of locomotives.

Except when a locomotive is moved in accordance with § 229.9, whenever two or more locomotives are coupled in remote or multiple control, the propulsion system, the sanders, and the power brake system of each locomotive shall respond to control from the cab of the controlling locomotive. If a dynamic brake or regenerative brake system is in use, that portion of the system in use shall respond to control from the cab of the controlling locomotive.

§ 229.14 Non-MU control cab locomotives.

On each non-MU control cab locomotive, only those components added to the passenger car that enable it to serve as a lead locomotive, control the locomotive actually providing tractive power, and otherwise control the movement of the train, are subject to this part.

§ 229.17 Accident reports.

(a) In the case of an accident due to a failure from any cause of a locomotive or any part or appurtenance of a locomotive, or a person coming in contact with an electrically energized part or appurtenance, that results in serious injury or death of one or more persons, the carrier operating the locomotive shall immediately report the accident by toll free telephone, Area Code 800–424–0201. The report shall state the nature of the accident, number of persons killed or seriously injured, the place at which it occurred, the location at which the locomotive or the affected parts may be inspected by the FRA, and the name, title and phone number of the person making the call. The locomotive or the part or parts affected by the accident shall be preserved intact by the carrier until after the FRA inspection.

(b) Written confirmation of the oral report required by paragraph (a) of this section shall be immediately mailed to the Federal Railroad Administration, RRS–25, Washington, DC 20590, and contain a detailed description of the accident, including to the extent known, the causes and the number of persons killed and injured. The written report required by this paragraph is in addition to the reporting requirements of 49 CFR part 225.

§ 229.19 Prior waivers.

All waivers of every form and type from any requirement of any order or regulation implementing the Locomotive Inspection Act, applicable to one or more locomotives except those propelled by steam power, shall lapse on August 31, 1980, unless a copy of the grant of waiver is filed prior to that date with the Office of Safety (RRS–23), Federal Railroad Administration, Washington, DC 20590.

Subpart B—Inspections and Tests

§ 229.21 Daily inspection.

(a) Except for MU locomotives, each locomotive in use shall be inspected at least once during each calendar day. A written report of the inspection shall be made. This report shall contain the name of the carrier; the initials and number of the locomotive; the place, date and time of the inspection; a description of the non-complying conditions disclosed by the inspection; and the signature of the employee making the inspection. Except as provided in §§ 229.9, 229.137, and 229.139, any conditions that constitute non-compliance with any requirement of this part shall be repaired before the locomotive is used. Except with respect to conditions that do not comply with § 229.137 or § 229.139, a notation shall be made on the report indicating the nature of the repairs that have been made. Repairs made for conditions that do not comply with § 229.137 or § 229.139 may be noted on the report, or in electronic form. The person making the repairs shall sign the report. The report shall be filed and retained for at least 92 days in the office of the carrier at the terminal at which the locomotive is cared for. A record shall be maintained on each locomotive showing the place, date and time of the previous inspection.

(b) Each MU locomotive in use shall be inspected at least once during each calendar day and a written report of

the inspection shall be made. This report may be part of a single master report covering an entire group of MU's. If any non-complying conditions are found, a separate, individual report shall be made containing the name of the carrier; the initials and number of the locomotive; the place, date, and time of the inspection; the non-complying conditions found; and the signature of the inspector. Except as provided in §§ 229.9, 229.137, and 229.139, any conditions that constitute non-compliance with any requirement of this part shall be repaired before the locomotive is used. Except with respect to conditions that do not comply with § 229.137 or § 229.139, a notation shall be made on the report indicating the nature of the repairs that have been made. Repairs made for conditions that do not comply with § 229.137 or § 229.139 may be noted on the report, or in electronic form. A notation shall be made on the report indicating the nature of the repairs that have been made. The person making the repairs shall sign the report. The report shall be filed in the office of the carrier at the place where the inspection is made or at one central location and retained for at least 92 days.

(c) Each carrier shall designate qualified persons to make the inspections required by this section.

[45 FR 21109, Mar. 31, 1980, as amended at 50 FR 6953, Feb. 19, 1985; 67 FR 16050, Apr. 4, 2002]

§ 229.23 Periodic inspection: General.

(a) Each locomotive and steam generator shall be inspected at each periodic inspection to determine whether it complies with this part. Except as provided in § 229.9, all non-complying conditions shall be repaired before the locomotive or the steam generator is used. Except as provided in § 229.33, the interval between any two periodic inspections may not exceed 92 days. Periodic inspections shall only be made where adequate facilities are available. At each periodic inspection, a locomotive shall be positioned so that a person may safely inspect the entire underneath portion of the locomotive.

(b) The periodic inspection of the steam generator may be postponed indefinitely if the water suction pipe to the water pump and the leads to the main switch (steam generator switch) are disconnected, and the train line shut-off-valve is wired closed or a blind gasket applied. However, the steam generator shall be so inspected before it is returned to use.

(c) After April 30, 1980, each new locomotive shall receive an initial periodic inspection before it is used. Except as provided in § 229.33, each locomotive in use on or before April 30, 1980, shall receive an initial periodic inspection within 92 days of the last 30-day inspection performed under the prior rules (49 CFR 230.331 and 230.451). At the initial periodic inspection, the date and place of the last tests performed that are the equivalent of the tests required by §§ 229.27, 229.29, and 229.31 shall be entered on Form FRA F 6180–49A. These dates shall determine when the tests first become due under §§ 229.27, 229.29, and 229.31. Out of use credit may be carried over from Form FRA F 6180–49 and entered on Form FRA F 6180–49A.

(d) Each periodic inspection shall be recorded on Form FRA F 6180–49A. The form shall be signed by the person conducting the inspection and certified by that person's supervisor that the work was done. The form shall be displayed under a transparent cover in a conspicuous place in the cab of each locomotive.

(e) At the first periodic inspection in each calendar year the carrier shall remove from each locomotive Form FRA F 6180–49A covering the previous calendar year. If a locomotive does not receive its first periodic inspection in a calendar year before April 2 because it is out of use, the form shall be promptly replaced. The Form FRA F 6180–49A covering the preceding year for each locomotive, in or out of use, shall be signed by the railroad official responsible for the locomotive and filed as required in § 229.23(f). The date and place of the last periodic inspection and the date and place of the last test performed under §§ 229.27, 229.29, and 229.31 shall be transferred to the replacement Form FRA F 6180–49A.

(f) The mechanical officer of each railroad who is in charge of a locomotive shall maintain in his office a secondary record of the information reported on Form FRA F 6180–49A under this part. The secondary record shall

be retained until Form FRA F 6180–49A has been removed from the locomotive and filed in the railroad office of the mechanical officer in charge of the locomotive. If the Form FRA F 6180–49A removed from the locomotive is not clearly legible, the secondary record shall be retained until the Form FRA F 6180–49A for the succeeding year is filed. The Form F 6180–49A removed from a locomotive shall be retained until the Form FRA F 6180–49A for the succeeding year is filed.

[45 FR 21109, Mar. 31, 1980, as amended at 45 FR 39852, June 12, 1980; 50 FR 6953, Feb. 19, 1985]

§ 229.25 Tests: Every periodic inspection.

Each periodic inspection shall include the following:

(a) All mechanical gauges used by the engineer to aid in the control or braking of the train or locomotive, except load meters used in conjunction with an auxiliary brake system, shall be tested by comparison with a deadweight tester or a test gauge designed for this purpose.

(b) All electrical devices and visible insulation shall be inspected.

(c) All cable connections between locomotives and jumpers that are designed to carry 600 volts or more shall be thoroughly cleaned, inspected, and tested for continuity.

(d) Each steam generator that is not isolated as prescribed in § 229.23(b) shall be inspected and tested as follows:

(1) All automatic controls, alarms and protective devices shall be inspected and tested.

(2) Steam pressure gauges shall be tested by comparison with a deadweight tester or a test gauge designed for this purpose. The siphons to the steam gauges shall be removed and their connections examined to determine that they are open.

(3) Safety valves shall be set and tested under steam after the steam pressure gauge is tested.

(e) *Event recorder.* A microprocessor-based self-monitoring event recorder, if installed, is exempt from periodic inspection under paragraphs (e)(1) through (e)(5) of this section and shall be inspected annually as required by § 229.27(d). Other types of event recorders, if installed, shall be inspected, maintained, and tested in accordance with instructions of the manufacturer, supplier, or owner thereof and in accordance with the following criteria:

(1) A written or electronic copy of the instructions in use shall be kept at the point where the work is performed and a hard-copy version, written in the English language, shall be made available upon request of a governmental agent empowered to request it.

(2) The event recorder shall be tested before any maintenance work is performed on it. At a minimum, the event recorder test shall include cycling, as practicable, all required recording elements and determining the full range of each element by reading out recorded data.

(3) If the pre-maintenance test does not reveal that the device is recording all the specified data and that all recordings are within the designed recording elements, this fact shall be noted, and maintenance and testing shall be performed as necessary until a subsequent test is successful.

(4) When a successful test is accomplished, a copy of the data-verification results shall be maintained in any medium with the maintenance records for the locomotive until the next one is filed.

(5) A railroad's event recorder periodic maintenance shall be considered effective if 90 percent of the recorders on locomotives inbound for periodic inspection in any given calendar month are still fully functional; maintenance practices and test intervals shall be adjusted as necessary to yield effective periodic maintenance.

[45 FR 21109, Mar. 31, 1980, as amended at 58 FR 36614, July 8, 1993; 60 FR 27905, May 26, 1995; 66 FR 4192, Jan. 17, 2001; 70 FR 37939, June 30, 2005]

§ 229.27 Annual tests.

A locomotive, except for a DMU or MU locomotive, shall be subjected to the tests and inspections prescribed in paragraphs (a), (b), and (c) of this section. A DMU locomotive or an MU locomotive shall be subjected to the tests and inspections prescribed in paragraphs (b) and (c) of this section. A locomotive, including a DMU locomotive or an MU locomotive, equipped with a

microprocessor-based event recorder that includes a self-monitoring feature, shall be subjected to the tests and inspections prescribed in paragraph (d) of this section. All testing under this section shall be performed at intervals that do not exceed 368 calendar days.

(a)(1) The filtering devices or dirt collectors located in the main reservoir supply line to the air brake system shall be cleaned, repaired, or replaced.

(2) Brake cylinder relay valve portions, main reservoir safety valves, brake pipe vent valve portions, feed and reducing valve portions in the air brake system (including related dirt collectors and filters) shall be cleaned, repaired, and tested.

(3) The date and place of the cleaning, repairing, and testing shall be recorded on Form FRA F 6180–49A and the person performing the work and that person's supervisor shall sign the form. A record of the parts of the air brake system that are cleaned, repaired, and tested shall be kept in the carrier's files or in the cab of the locomotive.

(4) At its option, a carrier may fragment the work required by this paragraph. In that event, a separate air record shall be maintained under a transparent cover in the cab. The air record shall include the locomotive number, a list of the air brake components, and the date and place of the last inspection and test of each component. The signature of the person performing the work and the signature of that person's supervisor shall be included for each component. A duplicate record shall be maintained in the carrier's files.

(b) The load meter shall be tested. Each device used by the engineer to aid in the control or braking of the train or locomotive that provides an indication of air pressure electronically shall be tested by comparison with a test gauge or self-test designed for this purpose. An error of greater than five percent or three pounds per square inch shall be corrected. The date and place of the test shall be recorded on Form FRA F 6180–49A, and the person conducting the test and that person's supervisor shall sign the form.

(c) Each steam generator that is not isolated as prescribed in § 229.23(b), shall be subjected to a hydrostatic pressure at least 25 percent above the working pressure and the visual return water-flow indicator shall be removed and inspected.

(d) A microprocessor-based event recorder with a self-monitoring feature equipped to verify that all data elements required by this part are recorded, requires further maintenance only if either or both of the following conditions exist:

(1) The self-monitoring feature displays an indication of a failure. If a failure is displayed, further maintenance and testing must be performed until a subsequent test is successful. When a successful test is accomplished, a record, in any medium, shall be made of that fact and of any maintenance work necessary to achieve the successful result. This record shall be available at the location where the locomotive is maintained until a record of a subsequent successful test is filed.

(2) A download of the event recorder, taken within the preceding 30 days and reviewed for the previous 48 hours of locomotive operation, reveals a failure to record a regularly recurring data element or reveals that any required data element is not representative of the actual operations of the locomotive during this time period. If the review is not successful, further maintenance and testing shall be performed until a subsequent test is successful. When a successful test is accomplished, a record, in any medium, shall be made of that fact and of any maintenance work necessary to achieve the successful result. This record shall be kept at the location where the locomotive is maintained until a record of a subsequent successful test is filed. The download shall be taken from information stored in the certified crashworthy crash hardened event recorder memory module if the locomotive is so equipped.

[45 FR 21109, Mar. 31, 1980, as amended at 66 FR 4192, Jan. 17, 2001; 70 FR 37940, June 30, 2005]

§ 229.29 Biennial tests.

(a) Except for the valves and valve portions on non-MU locomotives that are cleaned, repaired, and tested as prescribed in § 229.27(a), all valves, valve

portions, MU locomotive brake cylinders and electric-pneumatic master controllers in the air brake system (including related dirt collectors and filters) shall be cleaned, repaired, and tested at intervals that do not exceed 736 calendar days. The date and place of the cleaning, repairing, and testing shall be recorded on Form FRA F 6180–49A, and the person performing the work and that person's supervisor shall sign the form. A record of the parts of the air brake system that are cleaned, repaired, and tested shall be kept in the carrier's files or in the cab of the locomotive.

(b) At its option, a carrier may fragment the work required by this section. In that event, a separate air record shall be maintained under a transparent cover in the cab. The air record shall include the locomotive number, a list of the air brake components, and the date and place of the inspection and test of each component. The signature of the person performing the work and the signature of that person's supervisor shall be included for each component. A duplicate record shall be maintained in the carrier's files.

§ 229.31 Main reservoir tests.

(a) Before it is placed in service, each main reservoir other than an aluminum reservoir shall be subjected to a pneumatic or hydrostatic pressure of at least 25 percent more than the maximum working pressure fixed by the chief mechanical officer. The test date, place, and pressure shall be recorded on Form FRA F 6180–49A, block eighteen. Except as provided in paragraph (c) of this section, at intervals that do not exceed 736 calendar days, each main reservoir other than an aluminum reservoir shall be subjected to a hydrostatic pressure of at least 25 percent more than the maximum working pressure fixed by the chief mechanical officer. The test date, place, and pressure shall be recorded on Form FRA F 6180–49A, and the person performing the test and that person's supervisor shall sign the form.

(b) Except as provided in paragraph (c) of this section, each main reservoir other than an aluminum reservoir shall be hammer tested over its entire surface while the reservoir is empty at intervals that do not exceed 736 calendar days. The test date and place shall be recorded on Form FRA F 6180–49A, and the person performing the test and that person's supervisor shall sign the form.

(c) Each welded main reservoir originally constructed to withstand at least five times the maximum working pressure fixed by the chief mechanical officer may be drilled over its entire surface with telltale holes that are three-sixteenths of an inch in diameter. The holes shall be spaced not more than 12 inches apart, measured both longitudinally and circumferentially, and drilled from the outer surface to an extreme depth determined by the formula—

$$D = (.6PR/S–0.6P)$$

Where:

D = extreme depth of telltale holes in inches but in no case less than one-sixteenth inch;
P = certified working pressure in pounds per square inch;
S = one-fifth of the minimum specified tensile strength of the material in pounds per square inch; and
R = inside radius of the reservoir in inches.

One row of holes shall be drilled lengthwise of the reservoir on a line intersecting the drain opening. A reservoir so drilled does not have to meet the requirements of paragraphs (a) and (b) of this section, except the requirement for a pneumatic or hydrostatic test before it is placed in use. Whenever any such telltale hole shall have penetrated the interior of any reservoir, the reservoir shall be permanently withdrawn from service. A reservoir now in use may be drilled in lieu of the tests provided for by paragraphs (a) and (b) of this section, but shall receive a hydrostatic test before it is returned to use or may receive a pneumatic test if conducted by the manufacturer in an appropriately safe environment.

(d) Each aluminum main reservoir before being placed in use and at intervals that do not exceed 736 calendar days thereafter, shall be—

(1) Cleaned and given a thorough visual inspection of all internal and external surfaces for evidence of defects or deterioration; and

(2) Subjected to a hydrostatic pressure at least twice the maximum working pressure fixed by the chief mechanical officer, but not less than 250 p.s.i. The test date, place, and pressure shall be recorded on Form FRA F 6180–49A, and the person conducting the test and that person's supervisor shall sign the form.

[45 FR 21109, Mar. 31, 1980, as amended at 71 FR 61857, Oct. 19, 2006]

§ 229.33 Out-of-use credit.

When a locomotive is out of use for 30 or more consecutive days or is out of use when it is due for any test or inspection required by § 229.23, 229.25, 229.27, 229.29, or 229.31, an out-of-use notation showing the number of out-of-use days shall be made on an inspection line on Form FRA F 6180–49A. A supervisory employee of the carrier who is responsible for the locomotive shall attest to the notation. If the locomotive is out of use for one or more periods of at least 30 consecutive days each, the interval prescribed for any test or inspection under this part may be extended by the number of days in each period the locomotive is out of use since the last test or inspection in question. A movement made in accordance with § 229.9 is not a use for purposes of determining the period of the out-of-use credit.

Subpart C—Safety Requirements

GENERAL REQUIREMENTS

§ 229.41 Protection against personal injury.

Fan openings, exposed gears and pinions, exposed moving parts of mechanisms, pipes carrying hot gases and high-voltage equipment, switches, circuit breakers, contactors, relays, grid resistors, and fuses shall be in non-hazardous locations or equipped with guards to prevent personal injury.

§ 229.43 Exhaust and battery gases.

(a) Products of combustion shall be released entirely outside the cab and other compartments. Exhaust stacks shall be of sufficient height or other means provided to prevent entry of products of combustion into the cab or other compartments under usual operating conditions.

(b) Battery containers shall be vented and batteries kept from gassing excessively.

§ 229.45 General condition.

All systems and components on a locomotive shall be free of conditions that endanger the safety of the crew, locomotive or train. These conditions include: insecure attachment of components, including third rail shoes or beams, traction motors and motor gear cases, and fuel tanks; fuel, oil, water, steam, and other leaks and accumulations of oil on electrical equipment that create a personal injury hazard; improper functioning of components, including slack adjusters, pantograph operating cylinders, circuit breakers, contactors, relays, switches, and fuses; and cracks, breaks, excessive wear and other structural infirmities of components, including quill drives, axles, gears, pinions, pantograph shoes and horns, third rail beams, traction motor gear cases, and fuel tanks.

BRAKE SYSTEM

§ 229.46 Brakes: General.

The carrier shall know before each trip that the locomotive brakes and devices for regulating all pressures, including but not limited to the automatic and independent brake valves, operate as intended and that the water and oil have been drained from the air brake system.

§ 229.47 Emergency brake valve.

(a) Except for locomotives with cabs designed for occupancy by only one person, each road locomotive shall be equipped with a brake pipe valve that is accessible to a member of the crew, other than the engineer, from that crew member's position in the cab. On car body type locomotives, a brake pipe valve shall be attached to the wall adjacent to each end exit door. The words ''Emergency Brake Valve'' shall be legibly stenciled or marked near each brake pipe valve or shall be shown on an adjacent badge plate.

(b) DMU, MU, and control cab locomotives operated in road service shall be equipped with an emergency brake

valve that is accessible to another crew member in the passenger compartment or vestibule. The words ''Emergency Brake Valve'' shall be legibly stenciled or marked near each valve or shall be shown on an adjacent badge plate.

[45 FR 21109, Mar. 31, 1980, as amended at 71 FR 61857, Oct. 19, 2006]

§ 229.49 Main reservoir system.

(a)(1) The main reservoir system of each locomotive shall be equipped with at least one safety valve that shall prevent an accumulation of pressure of more than 15 pounds per square inch above the maximum working air pressure fixed by the chief mechanical officer of the carrier operating the locomotive.

(2) Except for non-equipped MU locomotives built prior to January 1, 1981, each locomotive that has a pneumatically actuated system of power controls shall be equipped with a separate reservoir of air under pressure to be used for operating those power controls. The reservoir shall be provided with means to automatically prevent the loss of pressure in the event of a failure of main air pressure, have storage capacity for not less than three complete operating cycles of control equipment and be located where it is not exposed to damage.

(b) A governor shall be provided that stops and starts or unloads and loads the air compressor within 5 pounds per square inch above or below the maximum working air pressure fixed by the carrier.

(c) Each compressor governor used in connection with the automatic air brake system shall be adjusted so that the compressor will start when the main reservoir pressure is not less than 15 pounds per square inch above the maximum brake pipe pressure fixed by the carrier and will not stop the compressor until the reservoir pressure has increased at least 10 pounds.

§ 229.51 Aluminum main reservoirs.

(a) Aluminum main reservoirs used on locomotives shall be designed and fabricated as follows:

(1) The heads and shell shall be made of Aluminum Association Alloy No. 5083–0, produced in accordance with American Society of Mechnical Engineers (ASME) Specification SB–209, as defined in the ''ASME Boiler and Pressure Vessel Code'' (1971 edition), section II, Part B, page 123, with a minimum tensile strength of 40,000 p.s.i. (40 k.s.i.).

(2) Each aluminum main reservoir shall be designed and fabricated in accordance with the ''ASME Boiler and Pressure Vessel Code,'' section VIII, Division I (1971 edition), except as otherwise provided in this part.

(3) An aluminum main reservoir shall be constructed to withstand at least five times its maximum working pressure or 800 p.s.i., whichever is greater.

(4) Each aluminum main reservoir shall have at least two inspection openings to permit complete circumferential visual observation of the interior surface. On reservoirs less than 18 inches in diameter, the size of each inspection opening shall be at least that of 1½-inch threaded iron pipe, and on reservoirs 18 or more inches in diameter, the size of each opening shall be at least that of 2-inch threaded iron pipe.

(b) The following publications, which contain the industry standards incorporated by reference in paragraph (a) of this section, may be obtained from the publishers and are also on file in the Office of Safety of the Federal Railroad Administration, Washington, DC 20590. Sections II and VIII of the ''ASME Boiler and Pressure Vessel Code'' (1971 edition) are published by the American Society of Mechanical Engineers, United Engineering Center, 345 East 47th Street, New York, New York 10017.

§ 229.53 Brake gauges.

All mechanical gauges and all devices providing indication of air pressure electronically that are used by the engineer to aid in the control or braking of the train or locomotive shall be located so that they may be conveniently read from the engineer's usual position during operation of the locomotive. A gauge or device shall not be more than five percent or three pounds per square inch in error, whichever is less.

[66 FR 4192, Jan. 17, 2001]

§ 229.55 Piston travel.

(a) Brake cylinder piston travel shall be sufficient to provide brake shoe clearance when the brakes are released.

(b) When the brakes are applied on a standing locomotive, the brake cylinder piston travel may not exceed 1½ inches less than the total possible piston travel. The total possible piston travel for each locomotive shall be entered on Form FRA F 6180–49A.

(c) The minimum brake cylinder pressure shall be 30 pounds per square inch.

§ 229.57 Foundation brake gear.

A lever, rod, brake beam, hanger, or pin may not be worn through more than 30 percent of its cross-sectional area, cracked, broken, or missing. All pins shall be secured in place with cotters, split keys, or nuts. Brake shoes shall be fastened with a brake shoe key and aligned in relation to the wheel to prevent localized thermal stress in the edge of the rim or the flange.

§ 229.59 Leakage.

(a) Leakage from the main air reservoir and related piping may not exceed an average of 3 pounds per square inch per minute for 3 minutes after the pressure has been reduced to 60 percent of the maximum pressure.

(b) Brake pipe leakage may not exceed 5 pounds per square inch per minute.

(c) With a full service application at maximum brake pipe pressure and with communication to the brake cylinders closed, the brakes shall remain applied at least 5 minutes.

(d) Leakage from control air reservoir, related piping, and pneumatically operated controls may not exceed an average of 3 pounds per square inch per minute for 3 minutes.

DRAFT SYSTEM

§ 229.61 Draft system.

(a) A coupler may not have any of the following conditions:

(1) A distance between the guard arm and the knuckle nose of more than 5⅛ inches on standard type couplers (MCB contour 1904) or more than 5⁵⁄₁₆ inches on D&E couplers.

(2) A crack or break in the side wall or pin bearing bosses outside of the shaded areas shown in Figure 1 or in the pulling face of the knuckle.

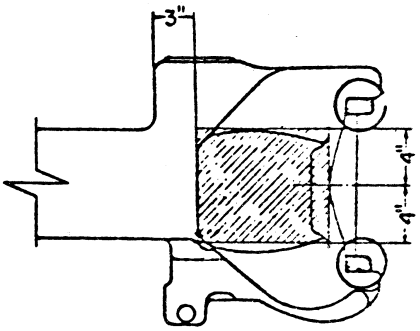

Figure 1

(3) A coupler assembly without anticreep protection.

(4) Free slack in the coupler or drawbar not absorbed by friction devices or draft gears that exceeds one-half inches.

(5) A broken or cracked coupler carrier.

(6) A broken or cracked yoke.

(7) A broken draft gear.

(b) A device shall be provided under the lower end of all drawbar pins and

articulated connection pins to prevent the pin from falling out of place in case of breakage.

SUSPENSION SYSTEM

§ 229.63 Lateral motion.

(a) Except as provided in paragraph (b), the total uncontrolled lateral motion between the hubs of the wheels and boxes, between boxes and pedestals or both, on any pair of wheels may not exceed 1 inch on non-powered axles and friction bearing powered axles, or ¾ inch on all other powered axles.

(b) The total uncontrolled lateral motion may not exceed 1¼ inches on the center axle of three-axle trucks.

§ 229.64 Plain bearings.

A plain bearing box shall contain visible free oil and may not be cracked to the extent that it will leak oil.

§ 229.65 Spring rigging.

(a) Protective construction or safety hangers shall be provided to prevent spring planks, spring seats or bolsters from dropping to track structure in event of a hanger or spring failure.

(b) An elliptical spring may not have its top (long) leaf broken or any other three leaves broken, except when that spring is part of a nest of three or more springs and none of the other springs in the nest has its top leaf or any other three leaves broken. An outer coil spring or saddle may not be broken. An equalizer, hanger, bolt, gib, or pin may not be cracked or broken. A coil spring may not be fully compressed when the locomotive is at rest.

(c) A shock absorber may not be broken or leaking clearly formed droplets of oil or other fluid.

§ 229.67 Trucks.

(a) The male center plate shall extend into the female center plate at least ¾ inch. On trucks constructed to transmit tractive effort through the center plate or center pin, the male center plate shall extend into the female center plate at least 1½ inches. Maximum lost motion in a center plate assemblage may not exceed ½ inch.

(b) Each locomotive shall have a device or securing arrangement to prevent the truck and locomotive body from separating in case of derailment.

(c) A truck may not have a loose tie bar or a cracked or broken center casting, motor suspension lug, equalizer, hanger, gib or pin. A truck frame may not be broken or have a crack in a stress area that may affect its structural integrity.

§ 229.69 Side bearings.

(a) Friction side bearings with springs designed to carry weight may not have more than 25 percent of the springs in any one nest broken.

(b) Friction side bearings may not be run in contact unless designed to carry weight. Maximum clearance of side bearings may not exceed one-fourth inch on each side or a total of one-half inch on both sides, except where more than two side bearings are used under the same rigid superstructure. The clearance on one pair of side bearings under the same rigid superstructure shall not exceed one-fourth inch on each side or a total of one-half inch on both sides; the other side bearings under the same rigid superstructure may have one-half inch clearance on each side or a total of 1 inch on both sides. These clearances apply where the spread of the side bearings is 50 inches or less; where the spread is greater, the side bearing clearance may only be increased proportionately.

§ 229.71 Clearance above top of rail.

No part or appliance of a locomotive except the wheels, flexible nonmetallic sand pipe extension tips, and trip cock arms may be less than 2½ inches above the top of rail.

§ 229.73 Wheel sets.

(a) The variation in the circumference of wheels on the same axle may not exceed ¼ inch (two tape sizes) when applied or turned.

(b) The maximum variation in the diameter between any two wheel sets in a three-powered-axle truck may not exceed ¾ inch, except that when shims are used at the journal box springs to compensate for wheel diameter variation, the maximum variation may not exceed 1¼ inch. The maximum variation in the diameter between any two

wheel sets on different trucks on a locomotive that has three-powered-axle trucks may not exceed 1¼ inch. The diameter of a wheel set is the average diameter of the two wheels on an axle.

(c) On standard gauge locomotives, the distance between the inside gauge of the flanges on non-wide flange wheels may not be less than 53 inches or more than 53½ inches. The distance between the inside gauge of the flanges on wide flange wheels may not be less than 53 inches or more than 53¼ inches.

(d) The distance back to back of flanges of wheels mounted on the same axle shall not vary more than ¼ inch.

§ 229.75 Wheels and tire defects.

Wheels and tires may not have any of the following conditions:

(a) A single flat spot that is 2½ inches or more in length, or two adjoining spots that are each two or more inches in length.

(b) A gouge or chip in the flange that is more than 1½ inches in length and ½ inch in width.

(c) A broken rim, if the tread, measured from the flange at a point five-eighths inch above the tread, is less than 3¾ inches in width.

(d) A shelled-out spot 2½ inches or more in length, or two adjoining spots that are each two or more inches in length.

(e) A seam running lengthwise that is within 3¾ inches of the flange.

(f) A flange worn to a ⅞ inch thickness or less, gauged at a point ⅜ inch above the tread.

(g) A tread worn hollow 5⁄16 inch or more on a locomotive in road service or ⅜ inch or more on a locomotive in switching service.

(h) A flange height of 1½ inches or more measured from tread to the top of the flange.

(i) Tires less than 1½ inches thick.

(j) Rims less than 1 inch thick on a locomotive in road service or less than ¾ inch on a locomotive in yard service.

(k) A crack or break in the flange, tread, rim, plate, or hub.

(l) A loose wheel or tire.

(m) Fusion welding may not be used on tires or steel wheels of locomotives, except for the repair of flat spots and worn flanges on locomotives used exclusively in yard service. A wheel that has been welded is a welded wheel for the life of the wheel.

ELECTRICAL SYSTEM

§ 229.77 Current collectors.

(a) Pantographs shall be so arranged that they can be operated from the engineer's normal position in the cab. Pantographs that automatically rise when released shall have an automatic locking device to secure them in the down position.

(b) Each pantograph operating on an overhead trolley wire shall have a device for locking and grounding it in the lowest position, that can be applied and released only from a position where the operator has a clear view of the pantograph and roof without mounting the roof.

§ 229.79 Third rail shoes.

When locomotives are equipped with both third rail and overhead collectors, third-rail shoes shall be deenergized while in yards and at stations when current collection is exclusively from the overhead conductor.

§ 229.81 Emergency pole; shoe insulation.

(a) Each locomotive equipped with a pantograph operating on an overhead trolley wire shall have an emergency pole suitable for operating the pantograph. Unless the entire pole can be safely handled, the part of the pole which can be safely handled shall be marked to so indicate. This pole shall be protected from moisture when not in use.

(b) Each locomotive equipped with third-rail shoes shall have a device for insulating the current collecting apparatus from the third rail.

§ 229.83 Insulation or grounding of metal parts.

All unguarded noncurrent-carrying metal parts subject to becoming charged shall be grounded or thoroughly insulated.

§ 229.85 Doors and cover plates marked "Danger".

All doors and cover plates guarding high voltage equipment shall be marked ''Danger—High Voltage'' or

with the word ''Danger'' and the normal voltage carried by the parts so protected.

§ 229.87 Hand-operated switches.

All hand-operated switches carrying currents with a potential of more than 150 volts that may be operated while under load shall be covered and shall be operative from the outside of the cover. Means shall be provided to show whether the switches are open or closed. Switches that should not be operated while under load shall be legibly marked with the words ''must not be operated under load'' and the voltage carried.

§ 229.89 Jumpers; cable connections.

(a) Jumpers and cable connections between locomotives shall be so located and guarded to provide sufficient vertical clearance. They may not hang with one end free.

(b) Cable and jumper connections between locomotive may not have any of the following conditions:

(1) Broken or badly chafed insulation.

(2) Broken plugs, receptacles or terminals.

(3) Broken or protruding strands of wire.

§ 229.91 Motors and generators.

A motor or a generator may not have any of the following conditions:

(a) Be shorted or grounded.

(b) Throw solder excessively.

(c) Show evidence of coming apart.

(d) Have an overheated support bearing.

(e) Have an excessive accumulation of oil.

INTERNAL COMBUSTION EQUIPMENT

§ 229.93 Safety cut-off device.

The fuel line shall have a safety cut-off device that—

(a) Is located adjacent to the fuel supply tank or in another safe location;

(b) Closes automatically when tripped and can be reset without hazard; and

(c) Can be hand operated from clearly marked locations, one inside the cab and one on each exterior side of the locomotive.

§ 229.95 Venting.

Fuel tank vent pipes may not discharge on the roof nor on or between the rails.

§ 229.97 Grounding fuel tanks.

Fuel tanks and related piping shall be electrically grounded.

§ 229.99 Safety hangers.

Drive shafts shall have safety hangers.

§ 229.101 Engines.

(a) The temperature and pressure alarms, controls and related switches of internal combustion engines shall function properly.

(b) Whenever an engine has been shut down due to mechanical or other problems, a distinctive warning notice giving reason for the shut-down shall be conspicuously attached near the engine starting control until repairs have been made.

(c) Wheel slip/slide protection shall be provided on a locomotive with an engine displaying a warning notice whenever required by § 229.115(b).

STEAM GENERATORS

§ 229.103 Safe working pressure; factor of safety.

The safe working pressure for each steam generator shall be fixed by the chief mechanical officer of the carrier. The minimum factor of safety shall be four. The fixed safe working pressure shall be indicated on FRA Form F 6180–49A.

§ 229.105 Steam generator number.

An identification number shall be marked on the steam generator's separator and that number entered on FRA Form F 6180–49A.

§ 229.107 Pressure gauge.

(a) Each steam generator shall have an illuminated steam gauge that correctly indicates the pressure. The steam pressure gauge shall be graduated to not less than one and one-half times the allowed working pressure of the steam generator.

(b) Each steam pressure gauge on a steam generator shall have a siphon

that prevents steam from entering the gauge. The pipe connection shall directly enter the separator and shall be steam tight between the separator and the gauge.

§ 229.109 Safety valves.

Every steam generator shall be equipped with at least two safety valves that have a combined capacity to prevent an accumulation of pressure of more than five pounds per square inch above the allowed working pressure. The safety valves shall be independently connected to the separator and located as closely to the separator as possible without discharging inside of the generator compartment. The ends of the safety valve discharge lines shall be located or protected so that discharged steam does not create a hazard.

§ 229.111 Water-flow indicator.

(a) Steam generators shall be equipped with an illuminated visual return water-flow indicator.

(b) Steam generators shall be equipped with an operable test valve or other means of determining whether the steam generator is filled with water. The fill test valve may not discharge steam or hot water into the steam generator compartment.

§ 229.113 Warning notice.

Whenever any steam generator has been shut down because of defects, a distinctive warning notice giving reasons for the shut-down shall be conspicuously attached near the steam generator starting controls until the necessary repairs have been made. The locomotive in which the steam generator displaying a warning notice is located may continue in service until the next periodic inspection.

CABS AND CAB EQUIPMENT

§ 229.115 Slip/slide alarms.

(a) Except for MU locomotives, each locomotive used in road service shall be equipped with a device that provides an audible or visual alarm in the cab of either slipping or sliding wheels on powered axles under power. When two or more locomotives are coupled in multiple or remote control, the wheel slip/slide alarm of each locomotive shall be shown in the cab of the controlling locomotive.

(b) Except as provided in § 229.9, an equipped locomotive may not be dispatched in road service, or continue in road service following a daily inspection, unless the wheel slip/slide protective device of whatever type—

(1) Is functioning for each powered axle under power; and

(2) Would function on each powered axle if it were under power.

(c) Effective January 1, 1981, all new locomotives capable of being used in road service shall be equipped with a device that detects wheel slip/slide for each powered axle when it is under power. The device shall produce an audible or visual alarm in the cab.

§ 229.117 Speed indicators.

(a) After December 31, 1980, each locomotive used as a controlling locomotive at speeds in excess of 20 miles per hour shall be equipped with a speed indicator which is—

(1) Accurate within ±3 miles per hour of actual speed at speeds of 10 to 30 miles per hour and accurate within ±5 miles per hour at speeds above 30 miles per hour; and

(2) Clearly readable from the engineer's normal position under all light conditions.

(b) Each speed indicator required shall be tested as soon as possible after departure by means of speed test sections or equivalent procedures.

§ 229.119 Cabs, floors, and passageways.

(a) Cab seats shall be securely mounted and braced. Cab doors shall be equipped with a secure and operable latching device.

(b) Cab windows of the lead locomotive shall provide an undistorted view of the right-of-way for the crew from their normal position in the cab. (See also, Safety Glazing Standards, 49 CFR part 223, 44 FR 77348, Dec. 31, 1979.)

(c) Floors of cabs, passageways, and compartments shall be kept free from oil, water, waste or any obstruction that creates a slipping, tripping or fire hazard. Floors shall be properly treated to provide secure footing.

(d) The cab shall be provided with proper ventilation and with a heating arrangement that maintains a temperature of at least 50 degrees Fahrenheit 6 inches above the center of each seat in the cab.

(e) Similar locomotives with open end platforms coupled in multiple control and used in road service shall have a means of safe passage between them; no passageway is required through the nose of car body locomotives. There shall be a continuous barrier across the full width of the end of a locomotive or a continuous barrier between locomotives.

(f) Containers shall be provided for carrying fusees and torpedoes. A single container may be used if it has a partition to separate fusees from torpedoes. Torpedoes shall be kept in a closed metal container.

§ 229.121 Locomotive cab noise.

(a) *Performance Standards for Locomotives.* (1) When tested for static noise in accordance with paragraph (a)(3) of this section, all locomotives of each design or model that are manufactured after October 29, 2007, shall average less than or equal to 85 dB(A), with an upper 99% confidence limit of 87 dB(A). The railroad may rely on certification from the equipment manufacturer for a production run that this standard is met. The manufacturer may determine the average by testing a representative sample of locomotives or an initial series of locomotives, provided that there are suitable manufacturing quality controls and verification procedures in place to ensure product consistency.

(2) In the maintenance of locomotives that are manufactured in accordance with paragraph (a)(1) of this section, a railroad shall not make any alterations that cause the average sound level for that locomotive design or model to exceed:

(i) 82 dB(A) if the average sound level for a locomotive design or model is less than 82 dB(A); or

(ii) 85 dB(A) if the average sound level for a locomotive design or model is 82 dB(A) to 85 dB(A), inclusive,

(3) The railroad or manufacturer shall follow the static test protocols set forth in appendix H of this part to determine compliance with paragraph (a)(1) of this section; and, to the extent reasonably necessary to evaluate the effect of alterations during maintenance, to determine compliance with paragraph (a)(2) of this section.

(b) *Maintenance of locomotives.* (1) If a railroad receives an excessive noise report, and if the condition giving rise to the noise is not required to be immediately corrected under part 229, the railroad shall maintain a record of the report, and repair or replace the item identified as substantially contributing to the noise:

(i) On or before the next periodic inspection required by § 229.23; or

(ii) If the railroad determines that the repair or replacement of the item requires significant shop or material resources that are not readily available, at the time of the next major equipment repair commonly used for the particular type of maintenance needed.

(2) Conditions that may lead a locomotive cab occupant to file an excessive noise report include, but are not limited to: defective cab window seals; defective cab door seals; broken or inoperative windows; deteriorated insulation or insulation that has been removed for other reasons; broken or inoperative doors; and air brakes that vent inside of the cab.

(3) A railroad has an obligation to respond to an excessive noise report that a locomotive cab occupant files. The railroad meets its obligation to respond to an excessive noise report, as set forth in paragraph (b)(1) of this section, if the railroad makes a good faith effort to identify the cause of the reported noise, and where the railroad is successful in determining the cause, if the railroad repairs or replaces the items cause the noise.

(4) *Recordkeeping.* (i) A railroad shall maintain a written or electronic record of any excessive noise report, inspection, test, maintenance, replacement, or repair completed pursuant to § 229.121(b) and the date on which that inspection, test, maintenance, replacement, or repair occurred. If a railroad elects to maintain an electronic record, the railroad must satisfy the conditions listed in § 227.121(a)(2)(i) through (v).

(ii) The railroad shall retain these records for 92 days if they are made pursuant to § 229.21, or for one year if they are made pursuant to § 229.23.

(iii) The railroad shall establish an internal, auditable, monitorable system that contains these records.

[71 FR 63136, Oct. 27, 2006]

§ 229.123 Pilots, snowplows, end plates.

After January 1, 1981, each lead locomotive shall be equipped with an end plate that extends across both rails, a pilot, or a snowplow. The minimum clearance above the rail of the pilot, snowplow or end plate shall be 3 inches, and the maximum clearance 6 inches.

§ 229.125 Headlights and auxiliary lights.

(a) Each lead locomotive used in road service shall have a headlight that produces a peak intensity of at least 200,000 candela. If a locomotive or locomotive consist in road service is regularly required to run backward for any portion of its trip other than to pick up a detached portion of its train or to make terminal movements, it shall also have on its rear a headlight that produces at least 200,000 candela. Each headlight shall be arranged to illuminate a person at least 800 feet ahead and in front of the headlight. For purposes of this section, a headlight shall be comprised of either one or two lamps.

(1) If a locomotive is equipped with a single-lamp headlight, the single lamp shall produce a peak intensity of at least 200,000 candela. The following lamps meet the standard set forth in this paragraph (a)(1): a single operative PAR–56, 200-watt, 30-volt lamp; or an operative lamp of equivalent design and intensity.

(2) If a locomotive is equipped with a dual-lamp headlight, a peak intensity of at least 200,000 candela shall be produced by the headlight based either on a single lamp capable of individually producing the required peak intensity or on the candela produced by the headlight with both lamps illuminated. If both lamps are needed to produce the required peak intensity, then both lamps in the headlight shall be operational. The following lamps meet the standard set forth in this paragraph (a)(2): a single operative PAR–56, 200-watt, 30-volt lamp; two operative PAR–56, 350-watt, 75-volt lamps; or operative lamp(s) of equivalent design and intensity.

(b) Each locomotive or locomotive consist used in yard service shall have two headlights, one located on the front of the locomotive or locomotive consist and one on its rear. Each headlight shall produce at least 60,000 candela and shall be arranged to illuminate a person at least 300 feet ahead and in front of the headlight.

(c) Headlights shall be provided with a device to dim the light.

(d) Effective December 31, 1997, each lead locomotive operated at a speed greater than 20 miles per hour over one or more public highway-rail crossings shall be equipped with operative auxiliary lights, in addition to the headlight required by paragraph (a) or (b) of this section. A locomotive equipped on March 6, 1996 with auxiliary lights in conformance with § 229.133 shall be deemed to conform to this section until March 6, 2000. All locomotives in compliance with § 229.133(c) shall be deemed to conform to this section. Auxiliary lights shall be composed as follows:

(1) Two white auxiliary lights shall be placed at the front of the locomotive to form a triangle with the headlight.

(i) The auxiliary lights shall be at least 36 inches above the top of the rail, except on MU locomotives and control cab locomotives where such placement would compromise the integrity of the car body or be otherwise impractical. Auxiliary lights on such MU locomotives and control cab locomotives shall be at least 24 inches above the top of the rail.

(ii) The auxiliary lights shall be spaced at least 36 inches apart if the vertical distance from the headlight to the horizontal axis of the auxiliary lights is 60 inches or more.

(iii) The auxiliary lights shall be spaced at least 60 inches apart if the vertical distance from the headlight to the horizontal axis of the auxiliary lights is less than 60 inches.

(2) Each auxiliary light shall produce a peak intensity of at least 200,000 candela or shall produce at least 3,000 candela at an angle of 7.5 degrees and at

least 400 candela at an angle of 20 degrees from the centerline of the locomotive when the light is aimed parallel to the tracks. Any of the following lamps meet the standard set forth in this paragraph (d)(2): an operative PAR–56, 200-watt, 30-volt lamp; an operative PAR–56, 350-watt, 75-volt lamp; or an operative lamp of equivalent design and intensity.

(3) The auxiliary lights shall be focused horizontally within 15 degrees of the longitudinal centerline of the locomotive.

(e) Auxiliary lights required by paragraph (d) of this section may be arranged

(1) to burn steadily or

(2) flash on approach to a crossing.

If the auxiliary lights are arranged to flash;

(i) they shall flash alternately at a rate of at least 40 flashes per minute and at most 180 flashes per minute,

(ii) the railroad's operating rules shall set a standard procedure for use of flashing lights at public highway-rail grade crossings, and

(iii) the flashing feature may be activated automatically, but shall be capable of manual activation and deactivation by the locomotive engineer.

(f) Auxiliary lights required by paragraph (d) of this section shall be continuously illuminated immediately prior to and during movement of the locomotive, except as provided by railroad operating rules, timetable or special instructions, unless such exception is disapproved by FRA. A railroad may except use of auxiliary lights at a specific public highway-rail grade crossing by designating that exception in the railroad's operating rules, timetable, or a special order. Any exception from use of auxiliary lights at a specific public grade crossing can be disapproved for a stated cause by FRA's Associate Administrator for Safety or any one of FRA's Regional Administrators, after investigation by FRA and opportunity for response from the railroad.

(g) Movement of locomotives with defective auxiliary lights.

(1) A lead locomotive with only one failed auxiliary light must be repaired or switched to a trailing position before departure from the place where an initial terminal inspection is required for that train.

(2) A locomotive with only one auxiliary light that has failed after departure from an initial terminal, must be repaired not later than the next calendar inspection required by § 229.21.

(3) A lead locomotive with two failed auxiliary lights may only proceed to the next place where repairs can be made. This movement must be consistent with § 229.9.

(h) Any locomotive subject to Part 229, that was built before December 31, 1948, and that is not used regularly in commuter or intercity passenger service, shall be considered historic equipment and excepted from the requirements of paragraphs (d) through (h) of this section.

[45 FR 21109, Mar. 31, 1980, as amended at 61 FR 8887, Mar. 6, 1996; 68 FR 49717, Aug. 19, 2003; 69 FR 12537, Mar. 16, 2004]

§ 229.127 Cab lights.

(a) Each locomotive shall have cab lights which will provide sufficient illumination for the control instruments, meters, and gauges to enable the engine crew to make accurate readings from their normal positions in the cab. These lights shall be located, constructed, and maintained so that light shines only on those parts requiring illumination and does not interfere with the crew's vision of the track and signals. Each controlling locomotive shall also have a conveniently located light that can be readily turned on and off by the persons operating the locomotive and that provides sufficient illumination for them to read train orders and timetables.

(b) Cab passageways and compartments shall have adequate illumination.

§ 229.129 Locomotive horn.

(a) Each lead locomotive shall be equipped with a locomotive horn that produces a minimum sound level of 96 dB(A) and a maximum sound level of 110 dB(A) at 100 feet forward of the locomotive in its direction of travel. The locomotive horn shall be arranged so that it can be conveniently operated from the engineer's usual position during operation of the locomotive.

(b)(1) Each locomotive built on or after September 18, 2006 shall be tested in accordance with this section to ensure that the horn installed on such locomotive is in compliance with paragraph (a) of this section. Locomotives built on or after September 18, 2006 may, however, be tested in accordance with an acceptance sampling scheme such that there is a probability of .05 or less of rejecting a lot with a proportion of defectives equal to an AQL of 1% or less, as set forth in 7 CFR part 43.

(2) Each locomotive built before September 18, 2006 shall be tested in accordance with this section before June 24, 2010 to ensure that the horn installed on such locomotive is in compliance with paragraph (a) of this section.

(3) Each remanufactured locomotive, as determined pursuant to § 229.5 of this part, shall be tested in accordance with this section to ensure that the horn installed on such locomotive is in compliance with paragraph (a).

(4)(i) Except as provided in paragraph (b)(4)(ii) of this section, each locomotive equipped with a replacement locomotive horn shall be tested, in accordance with paragraph (c) of this section, before the next two annual tests required by § 229.27 of this part are completed.

(ii) Locomotives that have already been tested individually or through acceptance sampling, in accordance with paragraphs (b)(1), (b)(2), or (b)(3) of this section, shall not be required to undergo sound level testing when equipped with a replacement locomotive horn, provided the replacement locomotive horn is of the same model as the locomotive horn that was replaced and the mounting location and type of mounting are the same.

(c) Testing of the locomotive horn sound level shall be in accordance with the following requirements:

(1) A properly calibrated sound level meter shall be used that, at a minimum, complies with the requirements of International Electrotechnical Commission (IEC) Standard 61672–1 (2002–05) for a Class 2 instrument.

(2) An acoustic calibrator shall be used that, at a minimum, complies with the requirements of IEC standard 60942 (1997–11) for a Class 2 instrument.

(3) The manufacturer's instructions pertaining to mounting and orienting the microphone; positioning of the observer; and periodic factory recalibration shall be followed.

(4) A microphone windscreen shall be used and tripods or similar microphone mountings shall be used that minimize interference with the sound being measured.

(5) The test site shall be free of large reflective structures, such as barriers, hills, billboards, tractor trailers or other large vehicles, locomotives or rail cars on adjacent tracks, bridges or buildings, within 200 feet to the front and sides of the locomotive. The locomotive shall be positioned on straight, level track.

(6) Measurements shall be taken only when ambient air temperature is between 32 degrees and 104 degrees Fahrenheit inclusively; relative humidity is between 20 percent and 95 percent inclusively; wind velocity is not more than 12 miles per hour and there is no precipitation.

(7) With the exception of cab-mounted or low-mounted horns, the microphone shall be located 100 feet forward of the front knuckle of the locomotive, 15 feet above the top of the rail, at an angle no greater than 20 degrees from the center line of the track, and oriented with respect to the sound source according to the manufacturer's recommendations. For cab-mounted and low-mounted horns, the microphone shall be located 100 feet forward of the front knuckle of the locomotive, four feet above the top of the rail, at an angle no greater than 20 degrees from the center line of the track, and oriented with respect to the sound source according to the manufacturer's recommendations. The observer shall not stand between the microphone and the horn.

(8) Background noise shall be minimal: the sound level at the test site immediately before and after each horn sounding event shall be at least 10 dB(A) below the level measured during the horn sounding.

(9) *Measurement procedures*. The sound level meter shall be set for A-weighting with slow exponential response and

shall be calibrated with the acoustic calibrator immediately before and after compliance tests. Any change in the before and after calibration levels shall be less than 0.5 dB. After the output from the locomotive horn system has reached a stable level, the A-weighted equivalent sound level (slow response) for a 10-second duration (LAeq, 10s) shall be obtained either directly using an integrating-averaging sound level meter, or recorded once per second and calculated indirectly. The arithmetic-average of a series of at least six such 10-second duration readings shall be used to determine compliance. The standard deviation of the readings shall be less than 1.5 dB.

(10) Written reports of locomotive horn testing required by this part shall be made and shall reflect horn type; the date, place, and manner of testing; and sound level measurements. These reports, which shall be signed by the person who performs the test, shall be retained by the railroad, at a location of its choice, until a subsequent locomotive horn test is completed and shall be made available, upon request, to FRA as provided by 49 U.S.C. 20107.

(d) This section does not apply to locomotives of rapid transit operations which are otherwise subject to this part.

[71 FR 47666, Aug. 17, 2006]

§ 229.131 Sanders.

(a) Prior to departure from an initial terminal, each locomotive, except for MU locomotives, shall be equipped with operative sanders that deposit sand on each rail in front of the first power operated wheel set in the direction of movement or shall be handled in accordance with the requirements contained in § 229.9.

(b) A locomotive being used in road service with sanders that become inoperative after departure from an initial terminal shall be handled in accordance with the following:

(1) A lead locomotive being used in road service that experiences inoperative sanders after departure from an initial terminal may continue in service until the earliest of the following occurrences:

(i) Arrival at the next initial terminal;

(ii) arrival at a location where it is placed in a facility with a sand delivery system;

(iii) the next periodic inspection under § 229.23; or

(iv) fourteen calendar days from the date the sanders are first discovered to be inoperative; and

(2) A trailing locomotive being used in road service that experiences inoperative sanders after departure from an initial terminal may continue in service until the earliest of the following occurrence:

(i) Arrival at the next initial terminal;

(ii) arrival at a location where it is placed in a facility with a sand delivery system; or

(iii) the next periodic inspection under § 229.23.

(c) A locomotive being used in switching service shall be equipped with operative sanders that deposit sand on each rail in front of the first power operated wheel set in the direction of movement. If the sanders become inoperative, the locomotive shall be handled in accordance with the following:

(1) A locomotive being used in switching service at a location not equipped with a sand delivery system may continue in service for seven calendar days from the date the sanders are first discovered inoperative or until its next periodic inspection under § 229.23, which ever occurs first; and

(2) A locomotive being used in switching service at locations equipped with a sand delivery system shall be handled in accordance with the requirements contained in § 229.9.

(d) A locomotive being handled under the provisions contained in paragraph (b) and (c)(1) of this section shall be tagged in accordance with § 229.9(a).

[72 FR 59223, Oct. 19, 2007]

§ 229.133 Interim locomotive conspicuity measures—auxiliary external lights.

(a) A locomotive at the head of a train or other movement is authorized to be equipped with auxiliary external lights, additional to the headlight required by § 229.125, for the purpose of improved conspicuity. A locomotive

that is equipped with auxiliary external lights in conformance with the specifications or performance standards set forth in paragraph (b) of this section on the date of issuance of a final rule that requires additional or other external lights on locomotives for improved conspicuity, as required by section 202(u) of the Federal Railroad Safety Act of 1970, shall be deemed to conform to the requirements of the final rule for four years following the date of issuance of that final rule.

(b) Each qualifying arrangement of auxiliary external lights shall conform to one of the following descriptions:

(1) *Ditch lights.* (i) Ditch lights shall consist of two white lights, each producing a steady beam of at least 200,000 candela, placed at the front of the locomotive, at least 36 inches above the top of the rail.

(ii) Ditch lights shall be spaced at least 36 inches apart if the vertical distance from the headlight to the horizontal axis of the ditch lights is 60 inches or more.

(iii) Ditch lights shall be spaced at least 60 inches apart if the vertical distance from the headlight to the horizontal axis of the ditch lights is less than 60 inches.

(iv) Ditch lights shall be focused horizontally within 45 degrees of the longitudinal centerline of the locomotive.

(2) *Strobe lights.* (i) Strobe lights shall consist of two white stroboscopic lights, each with ''effective intensity,'' as defined by the Illuminating Engineering Society's Guide for Calculating the Effective Intensity of Flashing Signal Lights (November 1964), of at least 500 candela.

(ii) The flash rate of strobe lights shall be at least 40 flashes per minute and at most 180 flashes per minute.

(iii) Strobe lights shall be placed at the front of the locomotive, at least 48 inches apart, and at least 36 inches above the top of the rail.

(3) *Crossing lights.* (i) Crossing lights shall consist of two white lights, placed at the front of the locomotive, at least 36 inches above the top of the rail.

(ii) Crossing lights shall be spaced at least 36 inches apart if the vertical distance from the headlight to the horizontal axis of the ditch lights is 60 inches or more.

(iii) Crossing lights shall be spaced at least 60 inches apart if the vertical distance from the headlight to the horizontal axis of the ditch lights is less than 60 inches.

(iv) Each crossing light shall produce at least 200,000 candela, either steadily burning or alternately flashing.

(v) The flash rate of crossing lights shall be at least 40 flashes per minute and at most 180 flashes per minute.

(vi) Crossing lights shall be focused horizontally within 15 degrees of the longitudinal centerline of the locomotive.

(4) *Oscillating light.* (i) An oscillating light shall consist of:

(A) One steadily burning white light producing at least 200,000 candela in a moving beam that depicts a circle or a horizontal figure ''8'' to the front, about the longitudinal centerline of the locomotive; or

(B) Two or more white lights producing at least 200,000 candela each, at one location on the front of the locomotive, that flash alternately with beams within five degrees horizontally to either side of the longitudinal centerline of the locomotive.

(ii) An oscillating light may incorporate a device that automatically extinguishes the white light if display of a light of another color is required to protect the safety of railroad operations.

(c)(1) Any lead locomotive equipped with oscillating lights as described in paragraph (b)(4) that were ordered for installation on that locomotive prior to January 1, 1996, is considered in compliance with § 229.125(d) (1) through (3).

(2) Any lead locomotive equipped with strobe lights as described in paragraph (b)(2) and operated at speeds no greater than 40 miles per hour, is considered in compliance with § 229.125(d) (1) through (3) until the locomotive is retired or rebuilt, whichever comes first.

(3) Any lead locomotive equipped with two white auxiliary lights spaced at least 44 inches apart on at least one axis which was equipped with these auxiliary lights before May 30, 1994, will be considered in compliance with

§ 229.125(d) (1) through (3) until the locomotive is retired or rebuilt, whichever comes first.

[58 FR 6902, Feb. 3, 1993, as amended at 59 FR 24963, May 13, 1994; 59 FR 39705, Aug. 4, 1994; 61 FR 8887, Mar. 6, 1996]

§ 229.135 Event recorders.

(a) *Duty to equip and record.* Except as provided in paragraphs (c) and (d) of this section, a train operated faster than 30 miles per hour shall have an in-service event recorder, of the type described in paragraph (b) of this section, in the lead locomotive. The presence of the event recorder shall be noted on Form FRA F6180–49A (by writing the make and model of event recorder with which the locomotive is equipped) under the REMARKS section, except that an event recorder designed to allow the locomotive to assume the lead position only if the recorder is properly functioning is not required to have its presence noted on Form FRA F6180–49A. For the purpose of this section, ''train'' includes a locomotive or group of locomotives with or without cars. The duty to equip the lead locomotive may be met with an event recorder located elsewhere than the lead locomotive provided that such event recorder monitors and records the required data as though it were located in the lead locomotive. The event recorder shall record the most recent 48 hours of operation of the electrical system of the locomotive on which it is installed.

(b) *Equipment requirements.* Event recorders shall monitor and record data elements required by this paragraph with at least the accuracy required of the indicators displaying any of the required elements to the engineer.

(1) A lead locomotive originally ordered before October 1, 2006, and placed in service before October 1, 2009, including a controlling remote distributed power locomotive, a lead manned helper locomotive, a DMU locomotive, and an MU locomotive, except as provided in paragraphs (c) and (d) of this section, shall have an in-service event recorder that records the following data elements:

(i) Train speed;

(ii) Selected direction of motion;

(iii) Time;

(iv) Distance;

(v) Throttle position;

(vi) Applications and operations of the train automatic air brake;

(vii) Applications and operations of the independent brake;

(viii) Applications and operations of the dynamic brake, if so equipped; and

(ix) Cab signal aspect(s), if so equipped and in use.

(2) A locomotive originally manufactured before October 1, 2006, and equipped with an event recorder that uses magnetic tape as its recording medium shall have the recorder removed from service on or before October 1, 2009 and replaced with an event recorder with a certified crashworthy event recorder memory module that meets the requirements of Appendix D of this part and that records at least the same number of data elements as the recorder it replaces.

(3) A lead locomotive, a lead manned helper locomotive, and a controlling remotely distributed power locomotive, other than a DMU or MU locomotive, originally ordered on or after October 1, 2006 or placed in service on or after October 1, 2009, shall be equipped with an event recorder with a certified crashworthy event recorder memory module that meets the requirements of Appendix D of this part. The certified event recorder memory module shall be mounted for its maximum protection. (Although other mounting standards may meet this standard, an event recorder memory module mounted behind and below the top of the collision posts and above the platform level is deemed to be mounted ''for its maximum protection.'') The event recorder shall record, and the certified crashworthy event recorder memory module shall retain, the following data elements:

(i) Train speed;

(ii) Selected direction of motion;

(iii) Time;

(iv) Distance;

(v) Throttle position;

(vi) Applications and operations of the train automatic air brake, including emergency applications. The system shall record, or provide a means of determining, that a brake application or release resulted from manipulation

of brake controls at the position normally occupied by the locomotive engineer. In the case of a brake application or release that is responsive to a command originating from or executed by an on-board computer (*e.g.*, electronic braking system controller, locomotive electronic control system, or train control computer), the system shall record, or provide a means of determining, the involvement of any such computer;

(vii) Applications and operations of the independent brake;

(viii) Applications and operations of the dynamic brake, if so equipped;

(ix) Cab signal aspect(s), if so equipped and in use;

(x) End-of-train (EOT) device loss of communication front to rear and rear to front;

(xi) Electronic controlled pneumatic braking (ECP) message (and loss of such message), if so equipped;

(xii) EOT armed, emergency brake command, emergency brake application;

(xiii) Indication of EOT valve failure;

(xiv) EOT brake pipe pressure (EOT and ECP devices);

(xv) EOT marker light on/off;

(xvi) EOT ''low battery'' status;

(xvii) Position of on/off switch for headlights on lead locomotive;

(xviii) Position of on/off switch for auxiliary lights on lead locomotive;

(xix) Horn control handle activation;

(xx) Locomotive number;

(xxi) Locomotive automatic brake valve cut in;

(xxii) Locomotive position in consist (lead or trail);

(xxiii) Tractive effort;

(xxiv) Cruise control on/off, if so equipped and in use; and

(xxv) Safety-critical train control data routed to the locomotive engineer's display with which the engineer is required to comply, specifically including text messages conveying mandatory directives, and maximum authorized speed. The format, content, and proposed duration for retention of such data shall be specified in the product safety plan submitted for the train control system under subpart H of part 236 of this chapter, subject to FRA approval under this paragraph. If it can be calibrated against other data required by this part, such train control data may, at the election of the railroad, be retained in a separate certified crashworthy memory module.

(4) A DMU locomotive and an MU locomotive originally ordered on or after October 1, 2006 or placed in service on or after October 1, 2009, shall be equipped with an event recorder with a certified crashworthy event recorder memory module that meets the requirements of Appendix D of this part. The certified event recorder memory module shall be mounted for its maximum protection. (Although other mounting standards may meet this standard, an event recorder memory module mounted behind the collision posts and above the platform level is deemed to be mounted ''for its maximum protection.'') The event recorder shall record, and the certified crashworthy event recorder memory module shall retain, the following data elements:

(i) Train speed;

(ii) Selected direction of motion;

(iii) Time;

(iv) Distance;

(v) Throttle position;

(vi) Applications and operations of the train automatic air brake, including emergency applications. The system shall record, or provide a means of determining, that a brake application or release resulted from manipulation of brake controls at the position normally occupied by the locomotive engineer. In the case of a brake application or release that is responsive to a command originating from or executed by an on-board computer (*e.g.*, electronic braking system controller, locomotive electronic control system, or train control computer), the system shall record, or provide a means of determining, the involvement of any such computer;

(vii) Applications and operations of the independent brake, if so equipped;

(viii) Applications and operations of the dynamic brake, if so equipped;

(ix) Cab signal aspect(s), if so equipped and in use;

(x) Emergency brake application(s);

(xi) Wheel slip/slide alarm activation (with a property-specific minimum duration);

(xii) Lead locomotive headlight activation switch on/off;

(xiii) Lead locomotive auxiliary lights activation switch on/off;

(xiv) Horn control handle activation;

(xv) Locomotive number;

(xvi) Locomotive position in consist (lead or trail);

(xvii) Tractive effort;

(xviii) Brakes apply summary train line;

(xix) Brakes released summary train line;

(xx) Cruise control on/off, if so equipped and used; and

(xxi) Safety-critical train control data routed to the locomotive engineer's display with which the engineer is required to comply, specifically including text messages conveying mandatory directives, and maximum authorized speed. The format, content, and proposed duration for retention of such data shall be specified in the product safety plan submitted for the train control system under subpart H of part 236 of this chapter, subject to FRA approval under this paragraph. If it can be calibrated against other data required by this part, such train control data may, at the election of the railroad, be retained in a separate certified crashworthy memory module.

(5) A locomotive equipped with an event recorder that is remanufactured, as defined in this part, on or after October 1, 2007, shall be equipped with an event recorder with a certified crashworthy event recorder memory module that meets the requirements of Appendix D to this part and is capable of recording, at a minimum, the same data as the recorder that was on the locomotive before it was remanufactured.

(6) An event recorder originally manufactured after January 1, 2010, that is installed on any locomotive identified in paragraph (b)(1) of this section shall be an event recorder with a certified crashworthy event recorder memory module that meets the requirements of Appendix D to this part and that is capable of recording, at a minimum, the same data as the event recorder that was previously on the locomotive.

(c) *Removal from service.* Notwithstanding the duty established in paragraph (a) of this section to equip certain locomotives with an in-service event recorder, a railroad may remove an event recorder from service and, if a railroad knows that an event recorder is not monitoring or recording required data, shall remove the event recorder from service. When a railroad removes an event recorder from service, a qualified person shall record the date that the device was removed from service on Form FRA F6180–49A, under the REMARKS section, unless the event recorder is designed to allow the locomotive to assume the lead position only if the recorder is properly functioning.

(d) *Response to defective equipment.* Notwithstanding the duty established in paragraph (a) of this section to equip certain locomotives with an in-service event recorder, a locomotive on which the event recorder has been taken out of service as provided in paragraph (c) of this section may remain as the lead locomotive only until the next calendar-day inspection. A locomotive with an inoperative event recorder is not deemed to be in improper condition, unsafe to operate, or a non-complying locomotive under §§ 229.7 and 229.9, and, other than the requirements of Appendix D of this part, the inspection, maintenance, and testing of event recorders are limited to the requirements set forth in §§ 229.25(e) and 229.27(d).

(e) *Preserving accident data.* If any locomotive equipped with an event recorder, or any other locomotive-mounted recording device or devices designed to record information concerning the functioning of a locomotive or train, is involved in an accident/incident that is required to be reported to FRA under part 225 of this chapter, the railroad that was using the locomotive at the time of the accident shall, to the extent possible, and to the extent consistent with the safety of life and property, preserve the data recorded by each such device for analysis by FRA. This preservation requirement permits the railroad to extract and analyze such data, provided the original downloaded data file, or an unanalyzed exact copy of it, shall be retained in secure custody and shall not be utilized for analysis or any other purpose except by direction of FRA or the National Transportation

Safety Board. This preservation requirement shall expire one (1) year after the date of the accident unless FRA or the Board notifies the railroad in writing that the data are desired for analysis.

(f) *Relationship to other laws.* Nothing in this section is intended to alter the legal authority of law enforcement officials investigating potential violation(s) of State criminal law(s), and nothing in this chapter is intended to alter in any way the priority of National Transportation Safety Board investigations under 49 U.S.C. 1131 and 1134, nor the authority of the Secretary of Transportation to investigate railroad accidents under 49 U.S.C. 5121, 5122, 20107, 20111, 20112, 20505, 20702, 20703, and 20902.

(g) *Disabling event recorders.* Except as provided in paragraph (c) of this section, any individual who willfully disables an event recorder is subject to civil penalty and to disqualification from performing safety-sensitive functions on a railroad as provided in § 218.55 of this chapter, and any individual who tampers with or alters the data recorded by such a device is subject to a civil penalty as provided in appendix B of part 218 of this chapter and to disqualification from performing safety-sensitive functions on a railroad if found unfit for such duties under the procedures in part 209 of this chapter.

§ 229.137 Sanitation, general requirements.

(a) *Sanitation compartment.* Except as provided in paragraph (b) of this section, all lead locomotives in use shall be equipped with a sanitation compartment. Each sanitation compartment shall be:

(1) Adequately ventilated;

(2) Equipped with a door that:

(i) Closes, and

(ii) Possesses a modesty lock by [18 months after publication of the final rule];

(3) Equipped with a toilet facility, as defined in this part;

(4) Equipped with a washing system, as defined in this part, unless the railroad otherwise provides the washing system to employees upon reporting for duty or occupying the cab for duty, or where the locomotive is equipped with a stationary sink that is located outside of the sanitation compartment;

(5) Equipped with toilet paper in sufficient quantity to meet employee needs, unless the railroad otherwise provides toilet paper to employees upon reporting for duty or occupying the cab for duty; and

(6) Equipped with a trash receptacle, unless the railroad otherwise provides portable trash receptacles to employees upon reporting for duty or occupying the cab for duty.

(b) *Exceptions.* (1) Paragraph (a) of this section shall not apply to:

(i) Locomotives engaged in commuter service or other short-haul passenger service and commuter work trains on which employees have ready access to railroad-provided sanitation facilities outside of the locomotive or elsewhere on the train, that meet otherwise applicable sanitation standards, at frequent intervals during the course of their work shift;

(ii) Locomotives engaged in switching service on which employees have ready access to railroad-provided sanitation facilities outside of the locomotive, that meet otherwise applicable sanitation standards, at frequent intervals during the course of their work shift;

(iii) Locomotives engaged in transfer service on which employees have ready access to railroad-provided sanitation facilities outside of the locomotive, that meet otherwise applicable sanitation standards, at frequent intervals during the course of their work shift;

(iv) Locomotives of Class III railroads engaged in operations other than switching service or transfer service, that are not equipped with a sanitation compartment as of June 3, 2002. Where an unequipped locomotive of a Class III railroad is engaged in operations other than switching or transfer service, employees shall have ready access to railroad-provided sanitation facilities outside of the locomotive that meet otherwise applicable sanitation standards, at frequent intervals during the course of their work shift, or the railroad shall arrange for enroute access to such facilities;

(v) Locomotives of tourist, scenic, historic, or excursion railroad operations, which are otherwise covered by this part because they are not propelled by steam power and operate on the general railroad system of transportation, but on which employees have ready access to railroad-provided sanitation facilities outside of the locomotive, that meet otherwise applicable sanitation standards, at frequent intervals during the course of their work shift; and

(vi) Except as provided in § 229.14 of this part, DMU, MU, and control cab locomotives designed for passenger occupancy and used in intercity push-pull service that are not equipped with sanitation facilities, where employees have ready access to railroad-provided sanitation in other passenger cars on the train at frequent intervals during the course of their work shift.

(2) Paragraph (a)(3) of this section shall not apply to:

(i) Locomotives of a Class I railroad which, prior to [the effective date of this section], were equipped with a toilet facility in which human waste falls via gravity to a holding tank where it is stored and periodically emptied, which does not conform to the definition of toilet facility set forth in this section. For these locomotives, the requirements of this section pertaining to the type of toilet facilities required shall be effective as these toilets become defective or are replaced with conforming units, whichever occurs first. All other requirements set forth in this section shall apply to these locomotives as of June 3, 2002; and

(ii) With respect to the locomotives of a Class I railroad which, prior to June 3, 2002, were equipped with a sanitation system other than the units addressed by paragraph (b)(2)(i) of this section, that contains and removes human waste by a method that does not conform with the definition of toilet facility as set forth in this section, the requirements of this section pertaining to the type of toilet facilities shall apply on locomotives in use on July 1, 2003. However, the Class I railroad subject to this exception shall not deliver locomotives with such sanitation systems to other railroads for use, in the lead position, during the time between June 3, 2002, and July 1, 2003. All other requirements set forth in this section shall apply to the locomotives of this Class I railroad as of June 3, 2002.

(c) *Defective, unsanitary toilet facility; prohibition in lead position.* Except as provided in paragraphs (c)(1) through (5) of this section, if the railroad determines during the daily inspection required by § 229.21 that a locomotive toilet facility is defective or is unsanitary, or both, the railroad shall not use the locomotive in the lead position. The railroad may continue to use a lead locomotive with a toilet facility that is defective or unsanitary as of the daily inspection only where all of the following conditions are met:

(1) The unsanitary or defective condition is discovered at a location where there are no other suitable locomotives available for use, ie., where it is not possible to switch another locomotive into the lead position, or the location is not equipped to clean the sanitation compartment if unsanitary or repair the toilet facility if defective;

(2) The locomotive, while noncompliant, did not pass through a location where it could have been cleaned if unsanitary, repaired if defective, or switched with another compliant locomotive, since its last daily inspection required by this part;

(3) Upon reasonable request of a locomotive crewmember operating a locomotive with a defective or unsanitary toilet facility, the railroad arranges for access to a toilet facility outside the locomotive that meets otherwise applicable sanitation standards;

(4) If the sanitation compartment is unsanitary, the sanitation compartment door shall be closed and adequate ventilation shall be provided in the cab so that it is habitable; and

(5) The locomotive shall not continue in service in the lead position beyond a location where the defective or unsanitary condition can be corrected or replaced with another compliant locomotive, or the next daily inspection required by this part, whichever occurs first.

(d) *Defective, unsanitary toilet facility; use in trailing position.* If the railroad determines during the daily inspection required by § 229.21 that a locomotive

toilet facility is defective or is unsanitary, or both, the railroad may use the locomotive in trailing position. If the railroad places the locomotive in trailing position, they shall not haul employees in the unit unless the sanitation compartment is made sanitary prior to occupancy. If the toilet facility is defective and the unit becomes occupied, the railroad shall clearly mark the defective toilet facility as unavailable for use.

(e) *Defective, sanitary toilet facility; use in switching, transfer service.* If the railroad determines during the daily inspection required by § 229.21 that a locomotive toilet facility is defective, but sanitary, the railroad may use the locomotive in switching service, as set forth in paragraph (b)(1)(ii) of this section, or in transfer service, as set forth in paragraph (b)(1)(iii) of this section for a period not to exceed 10 days. In this instance, the railroad shall clearly mark the defective toilet facility as unavailable for use. After expiration of the 10-day period, the locomotive shall be repaired or used in the trailing position.

(f) *Lack of toilet paper, washing system, trash receptacle.* If the railroad determines during the daily inspection required by § 229.21 that the lead locomotive is not equipped with toilet paper in sufficient quantity to meet employee needs, or a washing system as required by paragraph (a)(4) of this section, or a trash receptacle as required by paragraph (a)(6) of this section, the locomotive shall be equipped with these items prior to departure.

(g) *Inadequate ventilation.* If the railroad determines during the daily inspection required by § 229.21 that the sanitation compartment of the lead locomotive in use is not adequately ventilated as required by paragraph (a)(1) of this section, the railroad shall repair the ventilation prior to departure, or place the locomotive in trailing position, in switching service as set forth in paragraph (b)(1)(ii) of this section, or in transfer service as set forth in paragraph (b)(1)(iii) of this section.

(h) *Door closure and modesty lock.* If the railroad determines during the daily inspection required by § 229.21 that the sanitation compartment on the lead locomotive is not equipped with a door that closes, as required by paragraph (a)(2)(i) of this section, the railroad shall repair the door prior to departure, or place the locomotive in trailing position, in switching service as set forth in paragraph (b)(1)(ii) of this section, or in transfer service as set forth in paragraph (b)(1)(iii) of this section. If the railroad determines during the daily inspection required by § 229.21 that the modesty lock required by paragraph (a)(2)(ii) of this section is defective, the modesty lock shall be repaired pursuant to the requirements of § 229.139(e).

(i) *Equipped units; retention and maintenance.* Except where a railroad downgrades a locomotive to service in which it will never be occupied, where a locomotive is equipped with a toilet facility as of [the effective date of the final rule], the railroad shall retain and maintain the toilet facility in the locomotive consistent with the requirements of this part, including locomotives used in switching service pursuant to paragraph (b)(1)(ii) of this section, and in transfer service pursuant to paragraph (b)(1)(iii) of this section.

(j) *Newly manufactured units; in-cab facilities.* All locomotives manufactured after June 3, 2002, except switching units built exclusively for switching service and locomotives built exclusively for commuter service, shall be equipped with a sanitation compartment accessible to cab employees without exiting to the out-of-doors for use. No railroad may use a locomotive built after June 3, 2002, that does not comply with this subsection.

(k) *Potable water.* The railroad shall utilize potable water where the washing system includes the use of water.

[67 16050, Apr. 4, 2002, as amended at 71 FR 61857, Oct. 19, 2006]

§ 229.139 Sanitation, servicing requirements.

(a) The sanitation compartment of each lead locomotive in use shall be sanitary.

(b) All components required by § 229.137(a) for the lead locomotive in use shall be present consistent with the requirements of this part, and shall operate as intended such that:

(1) All mechanical systems shall function;

(2) Water shall be present in sufficient quantity to permit flushing;

(3) For those systems that utilize chemicals for treatment, the chemical (chlorine or other comparable oxidizing agent) used to treat waste must be present; and

(4) No blockage is present that prevents waste from evacuating the bowl.

(c) The sanitation compartment of each occupied locomotive used in switching service pursuant to § 229.137(b)(1)(ii), in transfer service pursuant to § 229.137(b)(1)(iii), or in a trailing position when the locomotive is occupied, shall be sanitary.

(d) Where the railroad uses a locomotive pursuant to § 229.137(e) in switching or transfer service with a defective toilet facility, such use shall not exceed 10 calendar days from the date on which the defective toilet facility became defective. The date on which the toilet facility becomes defective shall be entered on the daily inspection report.

(e) Where it is determined that the modesty lock required by § 229.137(a)(2) is defective, the railroad shall repair the modesty lock on or before the next 92-day inspection required by this part.

[67 16050, Apr. 4, 2002]

Subpart D—Locomotive Crashworthiness Design Requirements

§ 229.141 Body structure, MU locomotives.

(a) MU locomotives built new after April 1, 1956 that are operated in trains having a total empty weight of 600,000 pounds or more shall have a body structure designed to meet or exceed the following minimum specifications:

(1) The body structure shall resist a minimum static end load of 800,000 pounds at the rear draft stops ahead of the bolster on the center line of draft, without developing any permanent deformation in any member of the body structure.

(2) An anti-climbing arrangement shall be applied at each end that is designed so that coupled MU locomotives under full compression shall mate in a manner that will resist one locomotive from climbing the other. This arrangement shall resist a vertical load of 100,000 pounds without exceeding the yield point of its various parts or its attachments to the body structure.

(3) The coupler carrier and its connections to the body structure shall be designed to resist a vertical downward thrust from the coupler shank of 100,000 pounds for any horizontal position of the coupler, without exceeding the yield points of the materials used. When yielding type of coupler carrier is used, an auxiliary arrangement shall be provided that complies with these requirements.

(4) The outside end of each locomotive shall be provided with two main vertical members, one at each side of the diaphragm opening; each main member shall have an ultimate shear value of not less than 300,000 pounds at a point even with the top of the underframe member to which it is attached. The attachment of these members at bottom shall be sufficient to develop their full shear value. If reinforcement is used to provide the shear value, the reinforcement shall have full value for a distance of 18 inches up from the underframe connection and then taper to a point approximately 30 inches above the underframe connection.

(5) The strength of the means of locking the truck to the body shall be at least the equivalent of an ultimate shear value of 250,000 pounds.

(6) On or after November 8, 1999, paragraph (a)(1) of this section does not apply to ''passenger equipment'' as defined in § 238.5 of this chapter, unless such equipment is excluded from the requirements of §§ 238.203 through 238.219, and § 238.223 of this chapter by operation of § 238.201(a)(2) of this chapter. Paragraphs (a)(2) through (a)(4) of this section do not apply to ''passenger equipment'' as defined in § 238.5 of this chapter that is placed in service for the first time on or after September 8, 2000, unless such equipment is excluded from the requirements of §§ 238.203 through 238.219, and § 238.223 of this chapter by operation of § 238.201(a)(2) of this chapter.

(b) MU locomotives built new after April 1, 1956 that are operated in trains having a total empty weight of less than 600,000 pounds shall have a body

structure designed to meet or exceed the following minimum specifications:

(1) The body structure shall resist a minimum static end load of 400,000 pounds at the rear draft stops ahead of the bolster on the center line of draft, without developing any permanent deformation in any member of the body structure.

(2) An anti-climbing arrangement shall be applied at each end that is designed so that coupled locomotives under full compression shall mate in a manner that will resist one locomotive from climbing the other. This arrangement shall resist a vertical load of 75,000 pounds without exceeding the yield point of its various parts or its attachments to the body structure.

(3) The coupler carrier and its connections to the body structure shall be designed to resist a vertical downward thrust from the coupled shank of 75,000 pounds for any horizontal position of the coupler, without exceeding the yield points of the materials used. When a yielding type of coupler carrier is used, an auxiliary arrangement shall be provided that complies with these requirements.

(4) The outside end of each MU locomotive shall be provided with two main vertical members, one at each side of the diaphragm opening; each main member shall have an ultimate shear value of not less than 200,000 pounds at a point even with the top of the underframe member to which it is attached. The attachment of these members at bottom shall be sufficient to develop their full shear value, the reinforcement shall have full value for a distance of 18 inches up from the underframe connection and then taper to a point approximately 30 inches above the underframe connection.

(5) The strength of the means of locking the truck to the body shall be at least the equivalent of an ultimate shear value of 250,000 pounds.

(6) On or after November 8, 1999, paragraph (a)(1) of this section does not apply to ''passenger equipment'' as defined in § 238.5 of this chapter, unless such equipment is excluded from the requirements of §§ 238.203 through 238.219, and § 238.223 of this chapter by operation of § 238.201(a)(2) of this chapter. Paragraphs (a)(2) through (a)(4) of this section do not apply to ''passenger equipment'' as defined in § 238.5 of this chapter that is placed in service for the first time on or after September 8, 2000, unless such equipment is excluded from the requirements of §§ 238.203 through 238.219, and § 238.223 of this chapter by operation of § 238.201(a)(2) of this chapter.

[45 FR 21109, Mar. 31, 1980, as amended at 71 FR 36912, June 28, 2006]

§ 229.201 Purpose and scope.

(a) *Purpose*. The purpose of this subpart is to help protect locomotive cab occupants in the event that a locomotive collides with another locomotive or piece of on-track equipment, a shifted load on a freight car on an adjacent parallel track, or a highway vehicle at a highway-rail grade crossing.

(b) This subpart prescribes minimum crashworthiness standards for locomotives. It also establishes the requirements for obtaining FRA approval of: new locomotive crashworthiness design standards; changes to FRA-approved locomotive crashworthiness design standards; and alternative locomotive crashworthiness designs.

[71 FR 36912, June 28, 2006]

§ 229.203 Applicability.

(a) Except as provided in paragraphs (b) and (c) of this section, this subpart applies to all locomotives manufactured or remanufactured on or after January 1, 2009.

(b) *Cab cars and power cars*. The requirements of this subpart do not apply to cab control cars, MU locomotives, DMU locomotives, and semi-permanently coupled power cars that are subject to the design requirements for such locomotives set forth in part 238 of this chapter.

(c) *Locomotives used in designated service*. Locomotives used in designated service are exempt from the requirements of this subpart, with the exception of § 229.233 (minimum requirements for fuel tank design), which remains applicable to such locomotives.

[71 FR 36912, June 28, 2006]

§ 229.205 General requirements.

(a) Each wide-nose locomotive used in occupied service must meet the minimum crashworthiness performance requirements set forth in Appendix E of this part. Compliance with those performance criteria must be established by:

(1) Meeting an FRA-approved crashworthiness design standard (including AAR S–580, Locomotive Crashworthiness Requirements). The Director of the Federal Register approves incorporation by reference of the AAR S–580 (revised July 2005), ''Locomotive Crashworthiness Requirements,'' in this section in accordance with 5 U.S.C. 552(a) and 1 CFR part 51. You may obtain a copy of the incorporated standard from the Association of American Railroads, 50 F Street NW, Washington, DC 20001. You may inspect a copy of the incorporated standard at the Federal Railroad Administration, Docket Clerk, 1120 Vermont Ave., NW Suite 7000, Washington, DC 20590 or at the National Archives and Records Administration (NARA). For information on the availability of this material at NARA, call 202–741–6030, or go to *http://www.archives.gov/federal_register/code_of_federal_regulations/ibr_locations.html;*

(2) Meeting new design standards and changes to existing design standards approved by FRA pursuant to § 229.207; or

(3) Meeting an alternative crashworthiness design approved by FRA pursuant to § 229.209.

(b) A monocoque or semi-monocoque design locomotive must be designed in accordance with the provisions of AAR S–580, applicable to those types of locomotives, in accordance with §§ 238.405(a), 238.409 and 238.411 of this chapter, or in accordance with a standard or design approved by FRA as providing at least equivalent safety.

(c) A narrow-nose locomotive must be designed in accordance with the provisions of AAR S–580, applicable to that type of locomotive (notwithstanding any limitation of scope contained in that standard) or in accordance with a standard or design approved by FRA as providing at least equivalent safety.

[71 FR 36912, June 28, 2006]

§ 229.206 Design requirements.

Each locomotive used in occupied service must meet the minimum anti-climber, emergency egress, emergency interior lighting, and interior configuration design requirements set forth in AAR S–580 (incorporated by reference, see § 229.205).

[71 FR 36912, June 28, 2006]

§ 229.207 New locomotive crashworthiness design standards and changes to existing FRA-approved locomotive crashworthiness design standards.

(a) *General.* The following procedures govern consideration and action upon requests for FRA approval of new locomotive crashworthiness design standards and changes to existing FRA-approved locomotive crashworthiness design standards, including AAR S–580 (incorporated by reference, see § 229.205). Only a standards body which has adopted an FRA-approved locomotive crashworthiness design standard may initiate these procedures for FRA approval of changes to the standard.

(b) *Petitions for FRA approval of new locomotive crashworthiness design standards.* Each petition for FRA approval of a locomotive crashworthiness design standard must be titled ''Petition for FRA Approval of a New Locomotive Crashworthiness Design Standard,'' must be submitted to the Associate Administrator for Safety, Federal Railroad Administration, 1120 Vermont Ave., NW., Mail Stop 25, Washington, DC 20590, and must contain the following:

(1) The name, title, address, telephone number and e-mail address of the primary person to be contacted with regard to review of the petition;

(2) The proposed locomotive design standard, in detail;

(3) The intended type of service for locomotives designed under the proposed standard; and

(4) Appropriate data and analysis showing how the proposed design

standard either satisfies the requirements of § 229.205 for the type of locomotive design or provides at least an equivalent level of safety. Types of data and analysis to be considered are described in § 229.211(c)(1).

(c) *Petitions for FRA approval of substantive changes to an FRA-approved locomotive crashworthiness design standard.* Each petition for approval of a substantive change to an FRA-approved locomotive crashworthiness design standard must be titled ''Petition for FRA Approval of Changes to a Locomotive Crashworthiness Design Standard,'' must be submitted to the Associate Administrator for Safety, Federal Railroad Administration, 1120 Vermont Ave., NW., Mail Stop 25, Washington, DC 20590, and must contain the following:

(1) The name, title, address, telephone number and e-mail address of the primary person to be contacted with regard to review of the petition;

(2) The proposed change, in detail;

(3) The intended type of service for locomotives built with the proposed change; and

(4) Appropriate data and analysis showing how the resulting standard either satisfies the requirements for the type of locomotive set forth in § 229.205 or provides at least an equivalent level of safety. Types of data and analysis to be considered are described in § 229.211(c)(1).

(d) *Petitions for FRA approval of non-substantive changes to the existing FRA-approved crashworthiness design standards.* (1) Each petition for approval of a non-substantive change to an FRA-approved locomotive crashworthiness design standard must be titled ''Petition for FRA Approval of Non-substantive Changes to a Locomotive Crashworthiness Design Standard,'' must be submitted to the Associate Administrator for Safety, Federal Railroad Administration, 1120 Vermont Ave., NW, Mail Stop 25, Washington, DC 20590, and must contain the following:

(i) The name, title, address, telephone number and e-mail address of the primary person to be contacted with regard to review of the petition;

(ii) The proposed change, in detail; and

(iii) Detailed explanation of how the proposed change results in a non-substantive change to the existing FRA-approved crashworthiness design standard.

(2) If FRA determines that the proposed change is substantive, FRA will process the petition in accordance with paragraph (c) of this section.

[71 FR 36912, June 28, 2006]

§ 229.209 Alternative locomotive crashworthiness designs.

(a) *General.* The following procedures govern consideration and action upon requests for FRA approval of locomotive crashworthiness designs which are not consistent with any FRA-approved locomotive crashworthiness design standard.

(b) *Petitions for FRA approval of alternative locomotive crashworthiness designs.* Each petition for FRA approval of an alternative locomotive crashworthiness design must be titled ''Petition for FRA Approval of Alternative Locomotive Crashworthiness Design,'' must be submitted to the Associate Administrator for Safety, Federal Railroad Administration, 1120 Vermont Ave., NW, Mail Stop 25, Washington, DC 20590, and must contain the following:

(1) The name, title, address, telephone number and e-mail address of the primary person to be contacted with regard to review of the petition;

(2) The proposed locomotive crashworthiness design, in detail;

(3) The intended type of service for locomotives built under the proposed design; and

(4) Appropriate data and analysis showing how the design either satisfies the requirements of § 229.205 for the type of locomotive or provides at least an equivalent level of safety. Types of data and analysis to be considered are described in § 229.211(c)(1).

[71 FR 36913, June 28, 2006]

§ 229.211 Processing of petitions.

(a) *Federal Register notice.* FRA will publish in the FEDERAL REGISTER notice of receipt of each petition submitted under §§ 229.207(b), 229.207(c), or 229.209.

(b) *Comment.* Not later than 60 days from the date of publication of the notice in the FEDERAL REGISTER concerning a petition submitted under §§ 229.207(b), 229.207(c), or 229.209(b), any person may comment on the petition.

(1) Each comment must set forth specifically the basis upon which it is made, and contain a concise statement of the interest of the commenter in the proceeding.

(2) Each comment must be submitted to the U.S. Department of Transportation Central Docket Management System, Nassif Building, Room PL–401, 400 Seventh Street, SW., Washington, DC 20590, and must contain the assigned docket number which appeared in the FEDERAL REGISTER for that proceeding. The form of such submission may be in written or electronic form consistent with the standards and requirements established by the Central Docket Management System and posted on its Web site at *http://dms.dot.gov.*

(3) In the event FRA requires additional information to appropriately consider the petition, FRA will conduct a hearing on the petition in accordance with the procedures provided in § 211.25 of this chapter.

(c) *Disposition of petitions.* (1) In order to determine compliance with the performance criteria in Appendix E of this part, FRA will consider proper documentation of competent engineering analysis, or practical demonstrations, or both which may include validated computer modeling, structural crush analysis, component testing, full scale crash testing in a controlled environment, or any combination of the foregoing, together with evidence of effective peer review.

(2) If FRA finds that the petition complies with the requirements of this subpart and that the proposed change or new design standard satisfies the requirements of § 229.205 for the type of locomotive, the petition will be granted, normally within 90 days of its receipt. If the petition is neither granted nor denied within 90 days, the petition remains pending for decision. FRA may attach special conditions to the granting of the petition. Following the granting of a petition, FRA may reopen consideration of the petition for cause stated. Any decision granting or denying a petition is placed in the public docket for the petition.

(3) If FRA finds that the petition does not comply with the requirements of this subpart, or that the proposed change or new design standard does not satisfy the performance criteria contained in Appendix E of this part (where applicable), the petition will be denied, normally within 90 days of its receipt. If the petition is neither granted nor denied within 90 days, the petition remains pending for decision. FRA may re-open a denial of a petition for cause stated.

(4) When FRA grants or denies a petition, or reopens consideration of the petition, written notice will be sent to the petitioner and other interested parties and a copy of the notice will be placed in the public docket of this proceeding.

[71 FR 36913, June 28, 2006]

§ 229.213 Locomotive manufacturing information.

(a) Each railroad operating a locomotive subject to the requirements of this subpart must retain the following information:

(1) The date upon which the locomotive was manufactured or remanufactured;

(2) The name of the manufacturer or remanufacturer of the locomotive; and

(3) The design specification to which the locomotive was manufactured or remanufactured.

(b) The information required in paragraph (a) of this section must be located permanently in the locomotive cab or be provided within two business days upon request of FRA or an FRA-certified State inspector.

[71 FR 36914, June 28, 2006]

§ 229.215 Retention and inspection of designs.

(a) *Retention of records—original designs.* Each manufacturer or remanufacturer of a locomotive subject to this subpart shall retain all records of the original locomotive designs, including supporting calculations and drawings, pertaining to crashworthiness features required by this subpart. These records must be retained for the lesser period of:

(1) The life of such locomotive, except that records for a locomotive destroyed in a rail equipment accident/incident shall be retained for at least 12 months following the accident/incident; or

(2) Twenty years after the date of manufacture or, if remanufactured, twenty years after the date of remanufacture.

(b) *Retention of records—repairs and modifications.* Each owner or lessee of a locomotive subject to this subpart shall retain all records of repair or modification to crashworthiness features required by this subpart. These records must be retained for the lesser period of:

(1) The life of such locomotive, except that records for a locomotive destroyed in a rail equipment accident/incident shall be retained for at least 12 months following the accident/incident, or

(2) Twenty years after the date on which the repair or modification was performed.

(c) *Inspection of records.* Each custodian of records referred to in paragraphs (a) and (b) shall, upon request by FRA or an FRA-certified State inspector, make available for inspection and duplication within 7 days, any records referred to in paragraphs (a) and (b) of this section.

(d) *Third party storage of records.* Each custodian of records referred to in paragraphs (a) and (b) of this section may delegate storage duties to a third party; however, the custodian retains all responsibility for compliance with this section.

[71 FR 36914, June 28, 2006]

§ 229.217 Fuel tank.

(a) *External fuel tanks.* Locomotives equipped with external fuel tanks shall, at a minimum, comply with the requirements of AAR S–5506, ''Performance Requirements for Diesel Electric Locomotive Fuel Tanks'' (October 1, 2001), except for section 4.4. This paragraph does not apply to locomotives subject to the fuel tank safety requirements of § 238.223 or § 238.423 of this chapter. The Director of the Federal Register approves incorporation by reference of the AAR S–5506, ''Performance Requirements for Diesel Electric Locomotive Fuel Tanks'' (October 1, 2001) in this section in accordance with 5 U.S.C. 552(a) and 1 CFR part 51. You may obtain a copy of the incorporated standard from the Association of American Railroads, 50 F Street NW., Washington, DC 20001. You may inspect a copy of the incorporated standard at the Federal Railroad Administration, Docket Clerk, 1120 Vermont Ave., NW. Suite 7000, Washington, DC 20590 or at the National Archives and Records Administration (NARA). For more information on the availability of this material at NARA, call 202–741–6030, or go to *http://www.archives.gov/federal_register/code_of_federal_regulations/ibr_locations.html.*

(b) *Internal fuel tanks.* Locomotives equipped with internal fuel tanks shall, at a minimum, comply with the requirements of § 238.223(b) of this chapter.

[71 FR 36914, June 28, 2006]

APPENDIX A TO PART 229—FORM FRA 6180–49A

EDITORIAL NOTE: Appendix A, published at 45 FR 21118, Mar. 31, 1980, as part of the original document, is not carried in the CFR. Copies of Form FRA F6180–49A are available by contacting the Federal Railroad Administration, Office of Standards and Procedures, 400 7th St., SW., Washington, DC 20590.

APPENDIX B TO PART 229—SCHEDULE OF CIVIL PENALTIES[1]

Section	Violation	Willful violation
Subpart A—General		
229.7 Prohibited acts: Safety deficiencies not governed by specific regulations: To be assessed on relevant facts	$1,000–5,000	$2,000–7,500
229.9 Movement of noncomplying locomotives	(1)	(1)
229.11 Locomotive identification	1,000	2,000

Section	Violation	Willful violation
229.13 Control of locomotives	2,500	5,000
229.17 Accident reports	2,500	5,000
229.19 Prior Waivers	(1)	(1)
Subpart B—Inspection and tests		
229.21 Daily inspection:		
(a)(b):		
(1) Inspection overdue	2,000	4,000
(2) Inspection report not made, improperly executed, or not retained	1,000	2,000
(c) Inspection not performed by a qualified person	1,000	2,000
229.23 Periodic inspection General		
(a)(b):		
(1) Inspection overdue	2,500	5,000
(2) Inspection performed improperly or at a location where the underneath portion cannot be safely inspected	2,500	5,000
(c)(d):		
(1) Form missing	1,000	2,000
(2) Form not properly displayed	1,000	2,000
(3) Form improperly executed	1,000	2,000
(e) Replace Form FRA F 6180–49A by April 2	1,000	2,000
(f) Secondary record of the information reported on Form FRA F 6180.49A	1,000	2,000
229.25		
(a) through (e)(4) Tests: Every periodic inspection	2,500	5,000
(e)(5) Ineffective maintenance	8,000	16,000
229.27 Annual tests	2,500	5,000
229.29 Biennial tests	2,500	5,000
229.31:		
(a) Biennial hydrostatic tests of main reservoirs	2,500	5,000
(b) Biennial hammer tests of main reservoirs	2,500	5,000
(c) Drilled telltale holes in welded main reservoirs	2,500	5,000
(d) Biennial tests of aluminum main reservoirs	2,500	5,000
229.33 Out-of-use credit	1,000	2,000
Subpart C—Safety Requirements		
229.41 Protection against personal injury	2,500	5,000
229.43 Exhaust and battery gases	2,500	5,000
229.45 General condition: To be assessed based on relevant facts	1,000–5,000	2,000–7,500
229.46 Brakes: General	2,500	5,000
229.47 Emergency brake valve	2,500	5,000
229.49 Main reservoir system:		
(a)(1) Main reservoir safety valve	2,500	5,000
(2) Pneumatically actuated control reservoir	2,500	5,000
(b)(c) Main reservoir governors	2,500	5,000
229.51 Aluminum main reservoirs	2,500	5,000
229.53 Brake gauges	2,500	5,000
229.55 Piston travel	2,500	5,000
229.57 Foundation brake gear	2,500	5,000
229.59 Leakage	2,500	5,000
229.61 Draft system	2,500	5,000
229.63 Lateral motion	2,500	5,000
229.64 Plain bearing	2,500	5,000
229.65 Spring rigging	2,500	5,000
229.67 Trucks	2,500	5,000
229.69 Side bearings	2,500	5,000
229.71 Clearance above top of rail	2,500	5,000
229.73 Wheel sets	2,500	5,000
229.75 Wheel and tire defects:		
(a),(d) Slid flat or shelled spot(s):		
(1) One spot 2½″ or more but less than 3″ in length	2,500	5,000
(2) One spot 3″ or more in length	5,000	7,500
(3) Two adjoining spots each of which is 2″ or more in length but less than 2½″ in length	2,500	5,000
(4) Two adjoining spots each of which are at least 2″ in length, if either spot is 2½″ or more in length	5,000	7,500
(b) Gouge or chip in flange of:		
(1) more than 1½″ but less than 1⅝″ in length; and more than ½″ but less than ⅝″ in width	2,500	5,000
(2) 1⅝″ or more in length and ⅝″ or more in width	5,000	7,500
(c) Broken rim	5,000	7,500
(e) Seam in tread	2,500	5,000
(f) Flange thickness of:		
(1) ⅞″ or less but more than 13/16″	2,500	5,000

Section	Violation	Willful violation
(2) 13/16″ or less	5,000	7,500
(g) Tread worn hollow	2,500	5,000
(h) Flange height of:		
(1) 1½″ or greater but less than 1⅝″	2,500	5,000
(2) 1⅝″ or more	5,000	7,000
(i) Tire thickness	2,500	5,000
(j) Rim thickness:		
(1) Less than 1″ in road service and ¾″ in yard service	2,500	5,000
(2) 15/16″ or less in road service and 11/16″ in yard service	5,000	7,500
(k) Crack of less than 1″	5,000	7,500
(1) Crack of less than 1″	2,500	5,000
(2) Crack of 1″ or more	5,000	7,500
(3) Break	5,000	7,500
(l) Loose wheel or tire	5,000	7,500
(m) Welded wheel or tire	5,000	7,500
229.77 Current collectors	2,500	5,000
229.79 Third rail shoes and beams	2,000	4,000
229.81 Emergency pole; shoe insulation	2,500	5,000
229.83 Insulation or grounding	5,000	7,500
229.85 Door and cover plates marked "Danger"	2,500	5,000
229.87 Hand operated switches	2,500	5,000
229.89 Jumpers; cable connections:		
(a) Jumpers and cable connections; located and guarded	2,500	5,000
(b) Condition of jumpers and cable connections	2,500	5,000
229.91 Motors and generators	2,500	5,000
229.93 Safety cut-off device	2,500	5,000
229.95 Venting	2,500	5,000
229.97 Grounding fuel tanks	2,500	5,000
229.99 Safety hangers	2,500	5,000
229.101 Engines:		
(a) Temperature and pressure alarms, controls, and switches	2,500	5,000
(b) Warning notice	2,500	5,000
(c) Wheel slip/slide protection	2,500	5,000
229.103 Safe working pressure; factor of safety	2,500	5,000
229.105 Steam generator number	500	1,000
229.107 Pressure gauge	2,500	5,000
229.109 Safety valves	2,500	5,000
229.111 Water-flow indicator	2,500	5,000
229.113 Warning notice	2,500	5,000
229.115 Slip/slide alarms	2,500	5,000
229.117 Speed indicators	2,500	5,000
229.119 Cabs, floors, and passageways:		
(a)(1) Cab set not securely mounted or braced	2,500	5,000
(2) Insecure or improper latching device	2,500	5,000
(b) Cab windows of lead locomotive	2,500	5,000
(c) Floors, passageways, and compartments	2,500	5,000
(d) Ventilation and heating arrangement	2,500	5,000
(e) Continuous barrier	2,500	5,000
(f) Containers for fuses and torpedoes	2,500	5,000
229.121 Locomotive Cab Noise:		
(a) Performance Standards		
(1) Failure to meet sound level	5,000	7,500
(2) Improper maintenance alterations	2,500	5,000
(3) Failure to comply with static test protocols	2,500	5,000
(b) Maintenance of Locomotives		
(1) Failure to maintain excessive noise report record or respond to report as required	2,500	5,000
(3) Failure to make good faith effort as required	2,500	5,000
(4) Failure to maintain record as required	2,000	4,000
229.123 Pilots, snowplows, end plates	2,500	5,000
229.125		
(a) Headlights	2,500	5,000
(d) Auxiliary lights	2,500	5,000
229.127 Cab lights	2,500	5,000
229.129 Locomotive horn:		
(a) Prescribed sound levels	2,500	5,000
Arrangement of horn	2,500	5,000
(b) Failure to perform sound level test	2,500	5,000
(c) Sound level test improperly performed	2,500	5,000
Record of sound level test improperly executed, or not retained	1,000	4,000
229.131 Sanders	1,000	2,000
229.135 Event Recorders:		
(a) Lead locomotive without in-service event recorder	2,500	5,000

Section	Violation	Willful violation
(b) Failure to meet equipment requirements	2,500	5,000
(c) Unauthorized removal or failure to remove from service	2,500	5,000
(d) Improper response to out of service event recorder	2,500	5,000
(e) Failure to preserve data or unauthorized extraction of data	2,500	5,000
(g) Tampering with device or data	2,500	5,000
229.141 Body structure, MU locomotives	2,500	5,000
229.137 Sanitation, general:		
(a) Sanitation compartment in lead unit, complete failure to provide required items	$5,000	$10,000
(1) Ventilation	2,500	5,000
(2) Door missing	2,000	4,000
(2)(i) Door doesn't close	1,000	2,000
(2)(ii) No modesty lock	1,000	2,000
(3) Not equipped with toilet in lead	5,000	10,000
(4) Not equipped with washing system	1,000	2,000
(5) Lack of paper	1,000	2,000
(6) Lack of trash receptacle	1,000	2,000
(b) Exceptions:		
(1)(i) Commuter service, failure to meet conditions of exception	2,500	5,000
(1)(ii) Switching service, failure to meet conditions of exception	2,500	5,000
(1)(iii) Transfer service, failure to meet conditions of exception	2,500	5,000
(1)(iv) Class III, failure to meet conditions of exception	2,500	5,000
(1)(v) Tourist, failure to meet conditions of exception	2,500	5,000
(1)(vi) Control cab locomotive, failure to meet conditions of exception	2,500	5,000
(2) Noncompliant toilet	5,000	10,000
(c) Defective/unsanitary toilet in lead unit	2,500	5,000
(1–5) Failure to meet conditions of exception	2,500	5,000
(d) Defective/unsanitary unit; failure to meet conditions for trailing position	2,500	5,000
(e) Defective/sanitary unit; failure to meet conditions for switching/transfer service	2,500	5,000
(f) Paper, washing, trash holder; failure to equip prior to departure	2,500	5,000
(g) Inadequate ventilation; failure to repair or move prior to departure	2,500	5,000
(h) Door closure/modesty lock; failure to repair or move	1,000	2,000
(i) Failure to retain/maintain of equipped units	2,500	5,000
(j) Failure to equip new units/in-cab facility	2,500	5,000
(k) Failure to provide potable water	2,500	5,000
229.139 Servicing requirements:		
(a) Lead occupied unit not sanitary	2,500	5,000
(b) Components not present/operating	2,500	5,000
(c) Occupied unit in switching, transfer service, in trailing position not sanitary	2,500	5,000
(d) Defective unit used more than 10 days	2,500	5,000
(e) Failure to repair defective modesty lock	1,000	2,000
Subpart D—Locomotive Crashworthiness Design Requirements		
229.205 General requirements:.		
(a)(1) Wide-nose locomotive not designed in compliance with AAR S–580–2005	$5,000	$7,500
(2) Wide-nose locomotive not designed in compliance with new approved design standard	5,000	7,500
(3) Wide-nose locomotive not designed in compliance with alternate approved design standard	5,000	7,500
(b) Monocoque or semi-monocoque locomotive not in compliance with design requirements	5,000	7,500
(c) Narrow-nose not in compliance with design requirements	5,000	7,500
229.206 Design requirements:		
Locomotive fails to meet—		
(1) Emergency egress requirements	2,500	5,000
(2) Emergency interior lighting requirements	2,500	5,000
(3) Interior configuration requirements	2,500	5,000
229.213 Locomotive manufacturing information:		
(a) Failure to retain required information	2,500	5,000
(b) Failure to produce required information	2,500	5,000
229.215 Retention and inspection of designs:		
(a) Failure to retain required design records	2,500	5,000
(b) Failure to retain required repair or modification records	2,500	5,000
(c) Failure to make records available when requested	2,500	5,000
229.217 Fuel tank:		
(a) External fuel tank	5,000	7,500
(b) Internal fuel tank	5,000	7,500

[1] A penalty may be assessed against an individual only for a willful violation. Generally, when two or more violations of these regulations are discovered with respect to a single locomotive that is used by a railroad, the appropriate penalties set forth above are aggregated up to a maximum of $16,000 per day. However, a failure to perform, with respect to a particular locomotive, any of the inspections and tests required under subpart B of this part will be treated as a violation separate and distinct from, and in addition to, any substantive violative conditions found on that locomotive. Moreover, the Administrator reserves the right to assess a penalty of up to $27,000 for any violation where circumstances warrant. See 49 CFR part 209, appendix A.

Failure to observe any condition for movement set forth in §229.9 will deprive the railroad of the benefit of the movement-for-repair provision and make the railroad and any responsible individuals liable for penalty under the particular regulatory section(s) concerning the substantive defect(s) present on the locomotive at the time of movement. Failure to comply with §229.19 will result in the lapse of any affected waiver.

[53 FR 52931, Dec. 29, 1988, as amended at 58 FR 36615, July 8, 1993; 61 FR 8888, Mar. 6, 1996; 63 FR 11622, Mar. 10, 199867 FR 16052, Apr. 4, 2002; 69 FR 30594, May 28, 2004; 70 FR 21920, Apr. 27, 2005; 70 FR 37942, June 30, 2005; 71 FR 36915, June 28, 2006; 71 FR 47667, Aug. 17, 2006; 71 FR 63136, Oct. 27, 2006; 72 FR 51197, Sept. 6, 2007]

APPENDIX C TO PART 229—FRA LOCOMOTIVE STANDARDS—CODE OF DEFECTS

EDITORIAL NOTE: Appendix C, published at 45 FR 21121, Mar. 31, 1980, as part of the original document, is not carried in the CFR.

APPENDIX D TO PART 229—CRITERIA FOR CERTIFICATION OF CRASHWORTHY EVENT RECORDER MEMORY MODULE

Section 229.135(b) requires that certain locomotives be equipped with an event recorder that includes a certified crashworthy event recorder memory module. This appendix prescribes the requirements for certifying an event recorder memory module (ERMM) as crashworthy, including the performance criteria and test sequence for establishing the crashworthiness of the ERMM as well as the marking of the event recorder containing the crashworthy ERMM.

A. GENERAL REQUIREMENTS

1. Each manufacturer that represents its ERMM as crashworthy shall, by marking it as specified in Section B of this appendix, certify that the ERMM meets the performance criteria contained in this appendix and that test verification data are available to a railroad or to FRA upon request.

2. The test verification data shall contain, at a minimum, all pertinent original data logs and documentation that the test sample preparation, test set up, test measuring devices and test procedures were performed by designated, qualified personnel using recognized and acceptable practices. Test verification data shall be retained by the manufacturer or its successor as long as the specific model of ERMM remains in service on any locomotive.

3. A crashworthy ERMM shall be marked by its manufacturer as specified in Section B of this appendix.

B. MARKING REQUIREMENTS

1. The outer surface of the event recorder containing a certified crashworthy ERMM shall be colored international orange. In addition, the outer surface shall be inscribed, on the surface allowing the most visible area, in black letters on an international orange background, using the largest type size that can be accommodated, with the words CERTIFIED DOT CRASHWORTHY, followed by the ERMM model number (or other such designation), and the name of the manufacturer of the event recorder. This information may be displayed as follows:

CERTIFIED DOT CRASHWORTHY

Event Recorder Memory Module Model Number

Manufacturer's Name

Marking ''CERTIFIED DOT CRASHWORTHY'' on an event recorder designed for installation in a railroad locomotive is the certification that all performance criteria contained in this appendix have been met and all functions performed by, or on behalf of, the manufacturer whose name appears as part of the marking, conform to the requirements specified in this appendix.

2. Retro-reflective material shall be applied to the edges of each visible external surface of an event recorder containing a certified crashworthy ERMM.

C. PERFORMANCE CRITERIA FOR THE ERMM

An ERMM is crashworthy if it has been successfully tested for survival under conditions of fire, impact shock, static crush, fluid immersion, and hydro-static pressure contained in one of the two tables shown in this section of Appendix D. (*See* Tables 1 and 2.) Each ERMM must meet the individual performance criteria in the sequence established in Section D of this appendix. A performance criterion is deemed to be met if, after undergoing a test established in this Appendix D for that criterion, the ERMM has preserved all of the data stored in it. The data set stored in the ERMM to be tested shall include all the recording elements required by §229.135(b). The following tables describe alternative performance criteria that may be used when testing an ERMM's crashworthiness. A manufacturer may utilize either table during its testing but may not combine the criteria contained in the two tables.

TABLE 1—ACCEPTABLE PERFORMANCE CRITERIA—OPTION A

Parameter	Value	Duration	Remarks
Fire, High Temperature	750 °C (1400 °F)	60 minutes	Heat source: Oven.
Fire, Low Temperature	260 °C (500 °F)	10 hours.	
Impact Shock	55g	100 ms	½ sine crash pulse.
Static Crush	110kN (25,000 lbf)	5 minutes.	
Fluid Immersion	#1 Diesel, #2 Diesel, Water, Salt Water, Lube Oil.	Any *single* fluid, 48 hours.	
	Fire Fighting Fluid	10 minutes, following immersion above.	Immersion followed by 48 hours in a dry location without further disturbance.
Hydrostatic Pressure	Depth equivalent = 15 m. (50 ft.).	48 hours at nominal temperature of 25 °C (77 °F).	

TABLE 2—ACCEPTABLE PERFORMANCE CRITERIA—OPTION B

Parameter	Value	Duration	Remarks
Fire, High Temperature	1000 °C (1832 °F)	60 minutes	Heat source: Open flame.
Fire, Low Temperature	260 °C (500 °F)	10 hours	Heat source: Oven.
Impact Shock—Option 1	23gs	250 ms.	
Impact Shock—Option 2	55gs	100 ms	½ sine crash pulse.
Static Crush	111.2kN (25,000 lbf)	5 minutes.	
	44.5kN (10,000 lbf)	(single "squeeze")	Applied to 25% of surface of largest face.
Fluid Immersion	#1 Diesel, #2 Diesel, Water, Salt Water, Lube Oil, Fire Fighting Fluid.	48 hours *each*.	
Hydrostatic Pressure	46.62 psig (= 30.5 m. or 100 ft.).	48 hours at nominal temperature of 25 °C (77 °F).	

D. TESTING SEQUENCE

In order to reasonably duplicate the conditions an event recorder may encounter, the ERMM shall meet the various performance criteria, described in Section C of this appendix, in a set sequence. (*See* Figure 1). If all tests are done in the set sequence (single branch testing), the same ERMM must be utilized throughout. If a manufacturer opts for split branch testing, each branch of the test must be conducted using an ERMM of the same design type as used for the other branch. Both alternatives are deemed equivalent, and the choice of single branch testing or split branch testing may be determined by the party representing that the ERMM meets the standard.

Figure 1

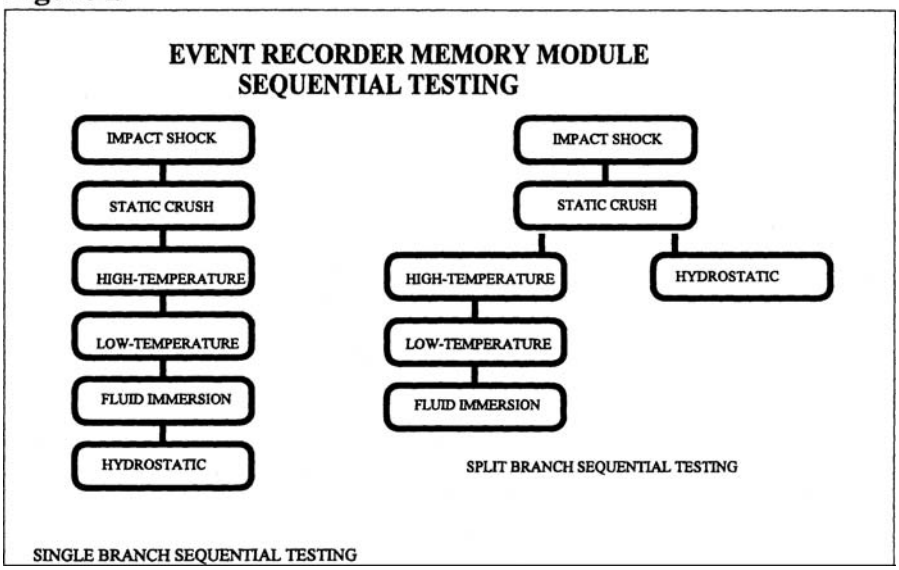

E. TESTING EXCEPTION

If a new model ERMM represents an evolution or upgrade from an older model ERMM that was previously tested and certified as meeting the performance criteria contained in Section C of this appendix, the new model ERMM need only be tested for compliance with those performance criteria contained in Section C of this appendix that are potentially affected by the upgrade or modification. FRA will consider a performance criterion not to be potentially affected if a preliminary engineering analysis or other pertinent data establishes that the modification or upgrade will not change the performance of the older model ERMM against the performance criterion in question. The manufacturer shall retain and make available to FRA upon request any analysis or data relied upon to satisfy the requirements of this paragraph to sustain an exception from testing.

[70 FR 37942, June 30, 2005]

APPENDIX E TO PART 229—PERFORMANCE CRITERIA FOR LOCOMOTIVE CRASHWORTHINESS

This appendix provides performance criteria for the crashworthiness evaluation of alternative locomotive designs, and design standards for wide-nosed locomotives and any for other locomotive, except monocoque/semi-monocoque design locomotives and narrow-nose design locomotives. Each of the following criteria describes a collision scenario and a given performance measure for protection provided to cab occupants, normally through structural design. Demonstration that these performance criteria have been satisfied may be accomplished through any of the methods described in §229.205. This performance criteria is intended to prevent intrusion into the cab seating area occupied by crews. This excludes inner and outer vestibule areas.

(a) *Front end structure (collision posts).*—(1) *Objective.* The front end structure of the locomotive must withstand a frontal impact with a proxy object which is intended to simulate lading carried by a heavy highway vehicle (see figure 1).

(2) *Proxy object characteristics and orientation.* The proxy object must have the following characteristics: Cylindrical shape; 48-inch diameter; 126-inch length; 65,000 pound minimum weight; and uniform density. The longitudinal axis of the proxy object must be oriented horizontally perpendicular to the longitudinal axis of the locomotive.

(3) *Impact and result.* The front end structure of the locomotive must withstand a 30-mph impact with the proxy object resulting in no more than 24 inches of crush along the longitudinal axis of the locomotive, measured from the foremost point on the collision post, and with no more than 12 inches of intrusion into the cab. The center of impact must be 30 inches above the top of the locomotive underframe along the longitudinal centerline of the locomotive.

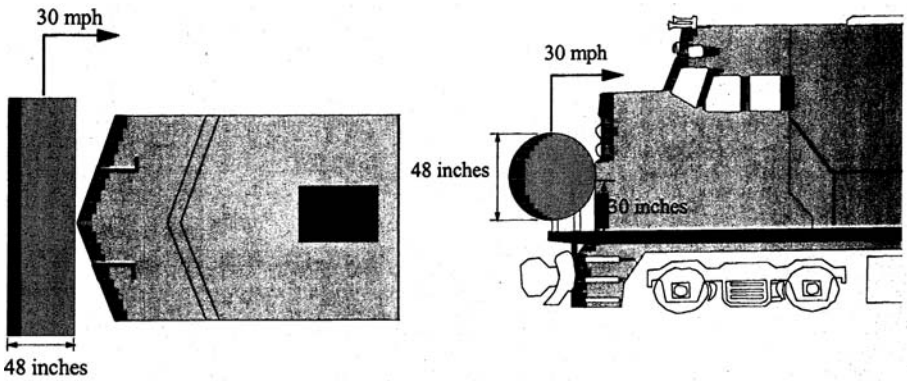

Figure 1. Schematic of Front End Structure (Collision Posts) Impact

(b) *Front end structure (short hood)*

(1) *Objective.* The front end structure of the locomotive must withstand an oblique impact with a proxy object intended to simulate an intermodal container offset from a freight car on an adjacent parallel track (see figure 2).

(2) *Proxy object characteristics and orientation.* The proxy object must have the following characteristics: Block shape; 36-inch width; 60-inch height; 108-inch length; corners having 3-inch radii corners; 65,000 pound minimum weight; and uniform density. The longitudinal axis of the proxy object must be oriented parallel to the longitudinal axis of the locomotive. At impact, the proxy object must be oriented such that there are 12 inches of lateral overlap and 30 inches from the bottom of the proxy object to the top of the locomotive underframe.

(3) *Impact and results.* The front end structure of the locomotive must withstand a 30-mph impact with the proxy object resulting in no more than 60 inches of crush along the longitudinal axis of the locomotive, measured from the first point of contact on the short hood post, and with no more than 12 inches of intrusion into the cab.

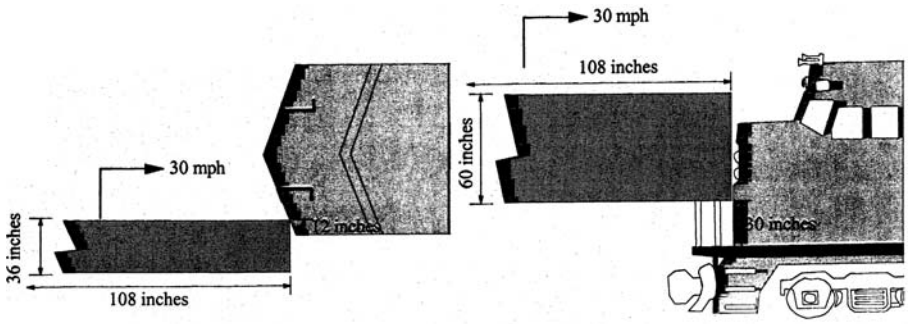

Figure 2. Schematic of Front End Structure (Short Hood) Offset Impact

[71 FR 36915, June 28, 2006]

APPENDIXES F–G TO PART 229 [RESERVED]

APPENDIX H TO PART 229:—STATIC NOISE TEST PROTOCOLS—IN-CAB STATIC

This appendix prescribes the procedures for the in-cab static measurements of locomotives.

I. MEASUREMENT INSTRUMENTATION

The instrumentation used should conform to the following: An integrating-averaging sound level meter shall meet all the requirements of ANSI S1.43–1997 (Reaffirmed 2002), ''Specifications for Integrating-Averaging Sound Level Meters,'' for a Type 1 Instrument. In the event that a Type 1 instrument is not available, the measurements may be conducted with a Type 2 instrument. The acoustic calibrator shall meet the requirement of the ANSI S1.40–1984 (Reaffirmed 2001), ''Specification for Acoustical Calibrators.'' The Director of the Federal Register approves the incorporation by reference of ANSI S1.43–1997 (Reaffirmed 2002) and ANSI S1.40–1984 (Reaffirmed 2001) in this section in accordance with 5 U.S.C. 552(a) and 1 CFR part 51. You may obtain a copy of the incorporated standards from the American National Standards Institute at 1819 L Street, NW., Washington, DC 20036 or *http://www.ansi.org*. You may inspect a copy of the incorporated standards at the Federal Railroad Administration, Docket Room, 1120 Vermont Ave., NW., Suite 700, Washington, DC 20005, or at the National Archives and Records Administration (NARA). For information on the availability of this material at NARA, call 202–741–6030, or go to *http://www.archives.gov/federal_register/code_of_federal_regulations/ibr_locations.html*

II. TEST SITE REQUIREMENTS

The test site shall meet the following requirements:

(1) The locomotive to be tested should not be positioned where large reflective surfaces are directly adjacent to or within 25 feet of the locomotive cab.

(2) The locomotive to be tested should not be positioned where other locomotives or rail cars are present on directly adjacent tracks next to or within 25 feet of the locomotive cab.

(3) All windows, doors, cabinets seals, etc., must be installed in the locomotive cab and be closed.

(4) The locomotive must be running for sufficient time before the test to be at normal operating temperature.

(5) The heating, ventilation and air conditioning (HVAC) system or a dedicated heating or air conditioner system must be operating on high, and the vents must be open and unobstructed.

(6) The locomotive shall not be tested in any site specifically designed to artificially lower in-cab noise levels.

III. PROCEDURES FOR MEASUREMENT

(1) $L_{Aeq,\ T}$ is defined as the A-weighted, equivalent sound level for a duration of T seconds, and the sound level meter shall be set for A-weighting with slow response.

(2) The sound level meter shall be calibrated with the acoustic calibrator immediately before and after the in-cab static tests. The calibration levels shall be recorded.

(3) Any change in the before and after calibration level(s) shall be less than 0.5 dB.

(4) The sound level meter shall be measured at each of the following locations:

(A) 30 inches above the center of the left seat;

(B) Centered in the middle of the cab between the right and left seats, and 56 inches above the floor;

(C) 30 inches above the center of the right seat; and

(D) One foot (0.3 meters) from the center of the back interior wall of the cab and 56 inches above the floor. See Figure 1.

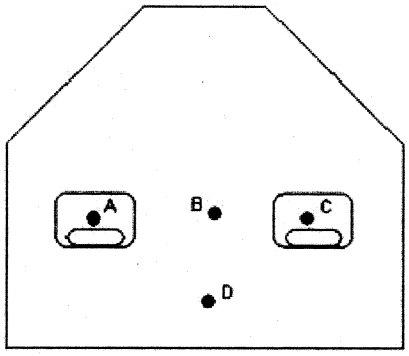

Figure 1. Microphone Locations inside Typical Locomotive Cab

(5) The observer shall stand as far from the microphone as possible. No more than two people (tester, observers or crew members) shall be inside the cab during measurements.

(6) The locomotive shall be tested under self-loading conditions if so equipped. If the locomotive is not equipped with self load, the locomotive shall be tested with no-load (No-load defined as maximum RPM—no electric load) and an adjustment of 3 dB added to the measured level.

(7) The sound level shall be recorded at the highest horsepower or throttle setting.

(8) After the engine speed has become constant and the in-cab noise is continuous, $L_{Aeq,\ T}$ shall be measured, either directly or using a 1 second sampling interval, for a minimum duration of 30 seconds at each measurement position ($L_{Aeq,\ 30s}$).

(9) The highest $L_{Aeq,\ 30s}$ of the 4 measurement positions shall be used for determining compliance with §229.121(a).

(10) A locomotive that has failed to meet the static test requirements of this regulation may be re-tested in accordance with the requirements in section II of this appendix.

IV. RECORDKEEPING

To demonstrate compliance, the entity conducting the test shall maintain records of the following data. The records created under this procedure shall be retained and made readily accessible for review for a minimum of three years. All records may be

maintained in either written or electronic form.

(1) Name(s) of persons conducting the test, and the date of the test.

(2) Description of locomotive being tested, including: make, model number, serial number, and date of manufacture.

(3) Description of sound level meter and calibrator, including: make, model, type, serial number, and manufacturer's calibration date.

(4) The recorded measurement during calibration and for each microphone location during operating conditions.

(5) Other information as appropriate to describe the testing conditions and procedure, including whether or not the locomotive was tested under self-loading conditions, or not.

(6) Where a locomotive fails a test and is re-tested under the provisions of §III(9) of this appendix, the suspected reason(s) for the failure.

[71 FR 63136, Oct. 27, 2006]

PART 230—STEAM LOCOMOTIVE INSPECTION AND MAINTENANCE STANDARDS

Subpart A—General

Sec.
230.1 Purpose and scope.
230.2 Applicability.
230.3 Implementation.
230.4 Penalties.
230.5 Preemptive effect.
230.6 Waivers.
230.7 Responsibility for compliance.
230.8 Definitions.
230.9 Information collection.
230.10 [Reserved]

GENERAL INSPECTION REQUIREMENTS

230.11 Repair of non-complying conditions.
230.12 Movement of non-complying steam locomotives.
230.13 Daily inspection.
230.14 Thirty-one (31) service day inspection.
230.15 Ninety-two (92) service day inspection.
230.16 Annual inspection.
230.17 One thousand four hundred seventy-two (1472) service day inspection.

RECORDKEEPING REQUIREMENTS

230.18 Service days.
230.19 Posting of FRA Form No. 1 and FRA Form No. 3.
230.20 Alteration and repair report for steam locomotive boilers.
230.21 Steam locomotive number change.
230.22 Accident reports.

Subpart B—Boilers and Appurtenances

230.23 Responsibility for general construction and safe working pressure.

ALLOWABLE STRESS

230.24 Maximum allowable stress.
230.25 Maximum allowable stress on stays and braces.

STRENGTH OF MATERIALS

230.26 Tensile strength of shell plates.
230.27 Maximum shearing strength of rivets.
230.28 Higher shearing strength of rivets.

INSPECTION AND REPAIR

230.29 Inspection and repair.
230.30 Lap-joint seam boilers.
230.31 Flues to be removed.
230.32 Time and method of inspection.
230.33 Welded repairs and alterations.
230.34 Riveted repairs and alterations.

PRESSURE TESTING OF BOILERS

230.35 Pressure testing.
230.36 Hydrostatic testing of boilers.
230.37 Steam test following repairs or alterations.

STAYBOLTS

230.38 Telltale holes.
230.39 Broken staybolts.
230.40 Time and method of staybolt testing.
230.41 Flexible staybolts with caps.

STEAM GAUGES

230.42 Location of gauges.
230.43 Gauge siphon.
230.44 Time of testing.
230.45 Method of testing.
230.46 Badge plates.
230.47 Boiler number.

SAFETY RELIEF VALVES

230.48 Number and capacity.
230.49 Setting of safety relief valves.
230.50 Time of testing.

WATER GLASSES AND GAUGE COCKS

230.51 Number and location.
230.52 Water glass valves.
230.53 Time of cleaning.
230.54 Testing and maintenance.
230.55 Tubular type water and lubricator glasses and shields.
230.56 Water glass lamps.

INJECTORS, FEEDWATER PUMPS, AND FLUE PLUGS

230.57 Injectors and feedwater pumps.
230.58 Flue plugs.

FUSIBLE PLUGS

230.59 Fusible plugs.

WASHING BOILERS

230.60 Time of washing.
230.61 Arch tubes, water bar tubes, circulators and thermic siphons.

STEAM PIPES

230.62 Dry pipe.
230.63 Smoke box, steam pipes and pressure parts.

STEAM LEAKS

230.64 Leaks under lagging.
230.65 Steam blocking view of engine crew.

Subpart C—Steam Locomotives and Tenders

230.66 Design, construction, and maintenance.
230.67 Responsibility for inspection and repairs.

SPEED INDICATORS

230.68 Speed indicators.

ASH PANS

230.69 Ash pans.

BRAKE AND SIGNAL EQUIPMENT

230.70 Safe condition.
230.71 Orifice testing of compressors.
230.72 Testing main reservoirs.
230.73 Air gauges.
230.74 Time of cleaning.
230.75 Stenciling dates of tests and cleaning.
230.76 Piston travel.
230.77 Foundation brake gear.
230.78 Leakage.
230.79 Train signal system.

CABS, WARNING SIGNALS, SANDERS AND LIGHTS

230.80 Cabs.
230.81 Cab aprons.
230.82 Fire doors.
230.83 Cylinder cocks.
230.84 Sanders.
230.85 Audible warning device.
230.86 Required illumination.
230.87 Cab lights.

THROTTLES AND REVERSING GEAR

230.88 Throttles.
230.89 Reverse gear.

DRAW GEAR AND DRAFT SYSTEMS

230.90 Draw gear between locomotive and tender.
230.91 Chafing irons.
230.92 Draw gear and draft systems.

DRIVING GEAR

230.93 Pistons and piston rods.
230.94 Crossheads.
230.95 Guides.
230.96 Main, side, and valve motion rods.
230.97 Crank pins.

RUNNING GEAR

230.98 Driving, trailing, and engine truck axles.
230.99 Tender truck axles.
230.100 Defects in tender truck axles and journals.
230.101 Steam locomotive driving journal boxes.
230.102 Tender plain bearing journal boxes.
230.103 Tender roller bearing journal boxes.
230.104 Driving box shoes and wedges.
230.105 Lateral motion.

TRUCKS, FRAMES AND EQUALIZING SYSTEM

230.106 Steam locomotive frame.
230.107 Tender frame and body.
230.108 Steam locomotive leading and trailing trucks.
230.109 Tender trucks.
230.110 Pilots.
230.111 Spring rigging.

WHEELS AND TIRES

230.112 Wheels and tires.
230.113 Wheels and tire defects.
230.114 Wheel centers.

STEAM LOCOMOTIVE TANKS

230.115 Feed water tanks.
230.116 Oil tanks.

APPENDIX A TO PART 230—INSPECTION REQUIREMENTS
APPENDIX B TO PART 230—DIAGRAMS AND DRAWINGS
APPENDIX C TO PART 230—FRA INSPECTION FORMS
APPENDIX D TO PART 230—CIVIL PENALTY SCHEDULE

AUTHORITY: 49 U.S.C. 20103, 20107, 20702; 28 U.S.C. 2461, note; and 49 CFR 1.49.

SOURCE: 64 FR 62865, Nov. 17, 1999, unless otherwise noted.

Subpart A—General

§ 230.1 Purpose and scope.

This part prescribes minimum Federal safety standards for all steam-propelled locomotives operated on railroads to which this part applies. This part does not restrict a railroad from adopting and enforcing additional or more stringent requirements not inconsistent with this part.

§ 230.2 Applicability.

(a) Except as provided in paragraph (b) of this section, this part applies to all railroads that operate steam locomotives.

(b) This part does not apply to:

(1) A railroad with track gage of less than 24 inches;

(2) A railroad that operates exclusively freight trains and does so only on track inside an installation that is not part of the general system of transportation;

(3) Rapid transit operations in an urban area that are not connected to the general system of transportation; or

(4) A railroad that operates passenger trains and does so only on track inside an installation that is insular, i.e., its operations are limited to a separate enclave in such a way that there is no reasonable expectation that the safety of the public—except a business guest, a licensee of the railroad or an affiliated entity, or a trespasser—would be affected by the operation. An operation will not be considered insular if one or more of the following exists on its line:

(i) A public highway-rail crossing that is in use;

(ii) An at-grade rail crossing that is in use;

(iii) A bridge over a public road or waters used for commercial navigation; or

(iv) A common corridor with another railroad, i.e., its operations are conducted within 30 feet of those of any other railroad.

(c) See appendix A of part 209 for a current statement of the FRA's policy on its exercise of jurisdiction.

§ 230.3 Implementation.

Except as provided in paragraphs (a) through (c) of this section, the locomotive owner and/or operator shall perform a 1472 service day inspection that meets the requirements of § 230.17 when the locomotive's flues would be required to be removed pursuant to § 230.10, of the regulations in effect prior to January 18, 2000. (See 49 CFR parts 200–999, revised October 1, 1978) At the time the locomotive owner and/or operator completes this inspection, it must begin to comply with the rest of the provisions of this part. Up until such time, and except as provided in paragraphs (a) through (c) of this section, compliance with the regulations in effect prior to January 18, 2000 (See 49 CFR parts 200–999, revised October 1, 1978) will constitute full compliance with this part. Any interested person may obtain the October 1, 1978 revision of 49 CFR part s 200–999 by contacting the Federal Railroad Administration, Office of Chief Counsel, 400 7th Street, SW, Washington, DC 20590.

(a) One year after January 18, 2000. The following sections of this part must be complied with by January 18, 2001: §§ 230.7, 230.51, 230.57, 230.68, 230.70, 230.85, 230.87, 230.115, and 230.116.

(b) *Interim flue removal extensions.* FRA will continue to consider requests for flue removal extensions under the provisions of § 230.10 of the regulations in effect prior to January 18, 2000 (See 49 CFR parts 200–999, revised October 1, 1978) until January 18, 2002.

(c) *Petition for special consideration.* The locomotive owner or operator may petition FRA for special consideration of this part's implementation with respect to any locomotive that has either fully or partially satisfied the requirements of § 230.17 within the three (3) year period prior to September 25, 1998—provided the locomotive is in full compliance with § 230.17 by the time the petition is actually filed.[1]

(1) *Petition process.* Petitions must be filed by January 18, 2001 and must be accompanied by all relevant documentation to be considered, including a FRA Form No. 4 (see appendix C of this part) that has been calculated in accordance with § 230.17, and all records that demonstrate the number of days the locomotive has been in service. Based upon the documentation provided, FRA will calculate the number of ''service days'' the locomotive has accrued and will notify the petitioner

[1] NOTE: As an example, where a locomotive has received a proper boiler inspection after September 25, 1995 pursuant to §§ 230.10 and 230.11 of the regulations in effect prior to January 18, 2000 but has not had its FRA Form No. 4 updated, the locomotive owner or operator may update and verify the FRA Form No. 4 for that locomotive, and submit a timely petition that requests retroactive credit for the boiler inspection. (See 49 CFR parts 200–999, revised October 1, 1978.)

of the number of service days that remain in the locomotive's 1472 service day cycle. Petitions should be sent to FRA by some form of registered mail to ensure a record of delivery. FRA will investigate these petitions and will respond to these petitions within one year of their receipt. FRA will send its response by some form of registered mail to ensure that a record of delivery is created. In its response, FRA may grant the petition or deny it. If FRA grants the petition, the entirety of the revised requirements will become effective upon receipt of FRA's response, unless FRA's response indicates otherwise. If FRA denies the petition, the rule will become effective as provided in the first paragraph of this section.

(2) *FRA silence.* Anyone who does not receive a response within one year of the date they filed their petition, whether through administrative or postal error, must notify FRA that the response has not been received. The notification should be provided to FRA by some form of registered mail to ensure a record of delivery. Upon receipt of this notification, FRA will ensure that a response is either issued, or reissued, as soon as possible. In the interim, however, any operator who is at the end of their inspection cycle under the rules in effect prior to January 18, 2000 (See 49 CFR parts 200–999, revised October 1, 1978) will be allowed to remain in service without conducting the required inspection under § 230.17 for an additional six months, or until they receive FRA's decision, whichever occurs first.

§ 230.4 Penalties.

(a) Any person who violates any requirement of this part or causes the violation of any such requirement is subject to a civil penalty of at least $550 and not more than $16,000 per violation, except that: Penalties may be assessed against individuals only for willful violations, and, where a grossly negligent violation or a pattern of repeated violations has created an imminent hazard of death or injury to persons, or has caused death or injury, a penalty not to exceed $27,000 per violation may be assessed. Each day a violation continues shall constitute a separate offense. See appendix A of part 209 for a statement of agency civil penalty policy.

(b) Any person who knowingly and willfully falsifies a record or report required by this part may be subject to criminal penalties under 49 U.S.C. 21311.

[64 FR 62865, Nov. 17, 1999, as amended at 69 FR 30594, May 28, 2004; 72 FR 51197, Sept. 6, 2007]

§ 230.5 Preemptive effect.

The Locomotive Boiler Inspection Act (49 U.S.C. 20701–20703) preempts all State laws or regulations concerning locomotive safety. *Napier* v. *Atlantic Coast Line R.R.*, 272 U.S. 605 (1926). However, FRA believes Congress did not intend to preempt State laws or regulations concerning rail operations over which FRA does not exercise jurisdiction. Therefore, in issuing this part, it is FRA's intent that State laws or regulations applicable to those rail operations to which this part does not apply (*i.e.*, insular tourist operations) not be preempted.

§ 230.6 Waivers.

(a) A person subject to a requirement of this part may petition the Administrator of FRA for a waiver of compliance with such requirement. The filing of such a petition does not affect that person's responsibility for compliance with that requirement while the petition is being considered.

(b) Each petition for waiver under this section must be filed in the manner and contain the information required by part 211 of this chapter.

(c) If the Administrator finds that a waiver of compliance is in the public interest and is consistent with railroad safety, the Administrator may grant the waiver subject to any conditions the Administrator deems necessary. Where a waiver is granted, the Administrator publishes a notice containing the reasons for granting the waiver.

(d) All waivers of every form and type from any requirement of any order or regulation implementing the Locomotive Boiler Inspection Act, 36 Stat. 913, as amended, 49 U.S.C. 20702, applicable to one or more steam locomotives, shall lapse on January 18, 2000 unless a copy of the grant of waiver is filed for reassessment prior to that

date with the Office of Safety, Federal Railroad Administration, 400 Seventh Street, Washington, DC 20590. FRA will review the waiver and notify the applicant whether the waiver has been continued.

§ 230.7 Responsibility for compliance.

(a) The locomotive owner and/or operator is directly responsible for ensuring that all requirements of this part are satisfied, and is the entity primarily responsible for compliance with this part.

(b) Although the duties imposed by this part are generally stated in terms of the duties of a railroad or a steam locomotive owner and/or operator, any person, including a contractor for a railroad, who performs any function covered by this part must perform that function in accordance with this part.

(c) Chapter 207 of Title 49 of the United States Codes makes it unlawful for any railroad to use or permit to be used on its line any steam locomotive or tender unless the entire steam locomotive or tender and its parts and appurtenances are in proper condition and safe to operate in the service to which they are put, without unnecessary danger of personal injury and have been inspected and tested as required by this part.

§ 230.8 Definitions.

As used in this part, the terms listed in this section have the following definitions:

Administrator. The Administrator of the Federal Railroad Administration or the Administrator's delegate.

Alteration. Any change to the boiler which affects its pressure retention capability. Rating changes are considered alterations.

ANSI. American National Standards Institute.

API. American Petroleum Institute.

ASME. American Society of Mechanical Engineers.

Boiler surfaces. The boiler interior is all the space inside a boiler occupied by water or steam under pressure, and all associated surfaces inside that space exposed to that water and steam. The boiler exterior is the opposite surface of all components directly exposed to the boiler interior. This includes the fire side of the firebox sheets.

Break. A fracture resulting in complete separation into parts.

Code of original construction. The manufacturer's or industry code in effect when the boiler was constructed. If the exact code is not known, the closest contemporary code may be used provided it does not pre-date the construction date of the boiler.

Crack. A fracture without complete separation into parts, except that castings with shrinkage cracks or hot tears that do not significantly diminish the strength of the member are not considered to be cracked.

Dead locomotive. A locomotive unable to produce tractive effort.

Fire. Anything that produces products of combustion that heat transferring components of the locomotive are exposed to.

FRA. The Federal Railroad Administration.

Locomotive operator. Person or entity which operates, but which does not necessarily own, one or more steam locomotives. This term means, for purposes of inspection and maintenance responsibility, the entity responsible for the day-to-day operation of the steam locomotive, or the delegate thereof. This entity may be a railroad or a person or persons who operate a steam locomotive under contract for a railroad.

Locomotive owner. Person or entity which owns, but which does not necessarily operate, one or more steam locomotives that is operated on a railroad to which this part applies. For purposes of inspection and maintenance responsibility, this term includes that entity's delegate as well.

MAWP. Maximum allowable working pressure as specified by the steam locomotive specification FRA Form No. 4. (See appendix C of this part.)

NBIC. National Board Inspection Code published by the National Board of Boiler and Pressure Vessel Inspectors.

NDE. Non-destructive Examination.

NPS. Nominal Pipe Size.

Person. An entity of any type covered under 1 U.S.C. 1, including but not limited to the following: a railroad; a manager, supervisor, official, or other employee or agent of a railroad; any owner, manufacturer, lessor, or lessee of railroad equipment, track, or facilities; any independent contractor providing goods or services to a railroad; and any employee of such owner, manufacturer, lessor, lessee, or independent contractor.

Railroad. Any form of non-highway ground transportation that runs on rails or electromagnetic guideways and any entity providing such transportation, including commuter or other short-haul railroad passenger service in a metropolitan or suburban area and commuter railroad service that was operated by the Consolidated Rail Corporation on January 1, 1979; and high speed ground transportation systems that connect metropolitan areas, without regard to whether those systems use new technologies not associated with traditional railroads; but does not include rapid transit operations in an urban area that are not connected to the general railroad system of transportation.

Renewal. Replacement in kind with a newly manufactured or remanufactured (restored to original tolerances) component. Materials shall be suitable for the service intended.

Repair. Any work which results in a restoration in kind.

Serious injury. An injury that results in the amputation of any appendage, the loss of sight in an eye, the fracture of a bone, or the confinement in a hospital for a period of more than 24 consecutive hours.

Service day. Any calendar day that the boiler has steam pressure above atmospheric pressure with fire in the firebox. In the case of a fireless steam locomotive, any calendar day that the boiler has steam pressure above atmospheric pressure.

Stayed portion of the boiler. That portion of the boiler designed to require support to retain internal pressure by the addition of strength members, such as staybolts, braces, diagonal stays, tubes, etc.

Steam locomotive. A self-propelled unit of equipment powered by steam that is either designed or used for moving other equipment. This includes a self-propelled unit designed or used to carry freight and/or passenger traffic.

Unstayed Portion of the Boiler. That portion of the boiler designed to be self-supported in retaining internal pressure without additional strength members such as staybolts, braces, diagonal stays, tubes, etc.

Wastage. A reduction in the thickness of a mechanical component, such as a pipe or sheet.

§ 230.9 Information collection.

(a) [Reserved]

(b) The information collection requirements are found in the following sections: §§ 230.3, 230.12 through 230.21, 230.33, 230.34, 230.41, 230.46, 230.47, 230.75, 230.96, 230.98, and 230.116.

§ 230.10 [Reserved]

GENERAL INSPECTION REQUIREMENTS

§ 230.11 Repair of non-complying conditions.

The steam locomotive owner and/or operator shall repair any steam locomotive that fails to comply with the conditions of this part, and shall approve any such repairs made, before placing the locomotive back into service.

§ 230.12 Movement of non-complying steam locomotives.

(a) *General limitations on movement*. A steam locomotive with one or more non-complying conditions may be moved only as a lite steam locomotive or a steam locomotive in tow, except as provided in paragraph (b) of this section. Cars essential to the movement of the steam locomotive and tender(s), including tool cars and a bunk car, may accompany lite movements.

(b) *Conditions for movement*. Prior to movement, the steam locomotive owner and/or operator shall determine that it is safe to move the locomotive, determine the maximum speed and other restrictions necessary for safely conducting the movement, and notify in writing the engineer in charge of the defective steam locomotive and, if towed, the engineer in charge of the towing locomotive consist, as well as all other crew members in the cabs, of

the presence of the non-complying steam locomotive and the maximum speed and other movement restrictions. In addition, a tag bearing the words ''non-complying locomotive'' shall be securely attached to each defective steam locomotive and shall contain the following information:

(1) The steam locomotive number;

(2) The name of the inspecting entity;

(3) The inspection location and date;

(4) The nature of the defect;

(5) Movement restrictions, if any;

(6) The destination; and

(7) The signature of the person making the determinations required by this paragraph (b).

(c) *Yard movements.* A non-complying steam locomotive may be moved lite or dead within a yard at speeds not in excess of 10 miles per hour without meeting the requirements of paragraph (b) of this section if the movement is solely for the purpose of repair. The locomotive owner and/or operator is responsible for ensuring that the movement may be safely made.

(d) *Non-complying conditions developed en route.* The locomotive owner and/or operator may continue in use a steam locomotive that develops a non-complying condition en route until the next daily inspection or the nearest forward point where the repairs necessary to bring it into compliance can be made, whichever is earlier. Before continuing en route, the steam locomotive owner and/or operator shall determine that it is safe to move the steam locomotive, determine the maximum speed and other restrictions necessary for safely conducting the movement, and notify in writing the engineer in charge of the defective steam locomotive and, if towed, the engineer in charge of the towing steam locomotive consist, as well as all other crew members in the cabs, of the presence of the non-complying steam locomotive and the maximum speed and other movement restrictions.

(e) *Special notice for repair.* Nothing in this section authorizes the movement of a steam locomotive subject to a Special Notice for Repair unless the movement is made in accordance with the restrictions contained in the Special Notice.

§ 230.13 Daily inspection.

(a) *General.* An individual competent to conduct the inspection shall inspect each steam locomotive and its tender each day that they are offered for use to determine that they are safe and suitable for service. The daily inspection shall be conducted to comply with all sections of this part, and a daily inspection report filed, by an individual competent to conduct the inspection. See appendices A and B of this part.

(b) *Pre-departure.* At the beginning of each day the steam locomotive is used, an individual competent to do so shall, together with the daily inspection required in paragraph (a) of this section, inspect the steam locomotive and its tender and appurtenances to ensure that they are safe and suitable for service, paying special attention to the following items:

(1) Water glasses and gauge cocks;

(2) Boiler feedwater delivery systems, such as injectors and feedwater pumps; and

(3) Air compressors and governors, and the air brake system.

(c) *Inspection reports.* The results of the daily inspection shall be entered on an FRA Form No. 2 (See appendix C of this part) which shall contain, at a minimum, the name of the railroad, the initials and number of the steam locomotive, the place, date and time of the inspection, the signature of the employee making the inspection, a description of the non-complying conditions disclosed by the inspection, conditions found in non-compliance during the day and repaired and the signature of the person who repaired the non-conforming conditions. This report shall be filed even if no non-complying conditions are detected. A competent individual shall sign the report, certifying that all non-complying conditions were repaired before the steam locomotive is operated. This report shall be filed and retained for at least 92 days at the location designated by the steam locomotive owner and/or operator.

§ 230.14 Thirty-one (31) service day inspection.

(a) *General.* An individual competent to conduct the inspection shall perform the 31 service day inspection after the

steam locomotive has accrued 31 service days. This inspection shall consist of all 31 service day inspection items and all daily inspection items. See appendix A of this part. Days in service shall be counted, recorded and readily available for inspection when requested by an FRA inspector.

(b) *FRA notification.* FRA Regional Administrators or their delegate(s) may require a steam locomotive owner or operator to provide FRA with timely notification before performing a 31 service day inspection. If the Regional Administrator or their delegate indicates their desire to be present for the 31 service day inspection, the steam locomotive owner and/or operator shall provide them a scheduled date and location for inspection. Once scheduled, the inspection must be performed at the time and place specified, unless the Regional Administrator and the steam locomotive owner and/or operator mutually agree to reschedule. If the Regional Administrator requests the inspection be performed on another date but the steam locomotive owner and/or operator and the Regional Administrator are unable to agree on a date for rescheduling, the inspection may be performed as scheduled.

(c) *Filing inspection reports.* Within 10 days of conducting the 31 service day inspection, the steam locomotive owner and/or operator shall file, for each steam locomotive inspected, a report of inspection (FRA Form No. 1), in the place where the steam locomotive is maintained and with the FRA Regional Administrator for that region. When the report of annual inspection (FRA Form No. 3), is filed, the FRA Form No. 1 does not have to be filed until the next 31 service day inspection. (See Appendix B of this part.)

§ 230.15 Ninety-two (92) service day inspection.

(a) *General.* An individual competent to conduct the inspection shall perform the 92 service day inspection after the steam locomotive has accrued 92 ''service-days.'' This inspection shall include all daily, all 31 service day, and all 92 service day inspection items. See appendix A of this part. Days in service shall be counted, recorded, and readily available for inspection when requested by an FRA inspector.

(b) *Filing inspection reports.* Within 10 days of conducting the 92 service day inspection, the steam locomotive owner and/or operator shall file, for each steam locomotive inspected, a report of inspection (FRA Form No. 1), in the place the locomotive is maintained and with the FRA Regional Administrator for that region.

When the report of annual inspection (FRA Form No. 3), is filed, the FRA Form No. 1 does not have to be filed until the next 92 service day inspection. (See appendix C of this part.)

§ 230.16 Annual inspection.

(a) *General.* (1) An individual competent to conduct the inspection shall perform the annual inspection after 368 calendar days have elapsed from the time of the previous annual inspection. This inspection shall include all daily, all 31 service day, all 92 service day, and all annual inspection items. (See appendix B of this part.)

(2) *Fifth annual inspection.* An individual competent to do so shall perform a flexible staybolt and cap inspection in accordance with § 230.41 at each fifth annual inspection.

(b) *FRA notification.* FRA Regional Administrators shall be provided written notice at least one month prior to an annual inspection and shall be afforded an opportunity to be present. If the Regional Administrator or their delegate indicates a desire to be present, the steam locomotive owner and/or operator will provide a scheduled date and location for the inspection. Once scheduled, the inspection must be performed at the time and place specified, unless the Regional Administrator and the steam locomotive owner and/or operator mutually agree to reschedule. If the Regional Administrator requests the inspection be performed on another date but the steam locomotive owner and/or operator and the Regional Administrator are unable to agree on a date for rescheduling, the inspection may be performed as scheduled.

(c) *Filing inspection reports.* Within 10 days of completing the annual inspection, the steam locomotive owner and/or operator shall file, for each steam

locomotive inspected, a report of inspection (FRA Form No. 3), in the place where the steam locomotive is maintained and with the FRA Regional Administrator for that region. (See appendix A of this part)

§ 230.17 One thousand four hundred seventy-two (1472) service day inspection.

(a) *General*. Before any steam locomotive is initially put in service or brought out of retirement, and after every 1472 service days or 15 years, whichever is earlier, an individual competent to conduct the inspection shall inspect the entire boiler. In the case of a new locomotive or a locomotive being brought out of retirement, the initial 15 year period shall begin on the day that the locomotive is placed in service or 365 calendar days after the first flue tube is installed in the locomotive, whichever comes first. This 1472 service day inspection shall include all annual, and 5th annual, inspection requirements, as well as any items required by the steam locomotive owner and/or operator or the FRA inspector. At this time, the locomotive owner and/or operator shall complete, update and verify the locomotive specification card (FRA Form No. 4), to reflect the condition of the boiler at the time of this inspection. See appendices A and B of this part.

(b) *Filing inspection reports*. Within 30 days of completing the 1472 service day inspection, the steam locomotive owner and/or operator shall, for each steam locomotive inspected, file in the place where the steam locomotive is maintained and with the FRA Regional Administrator for that region a report of inspection (FRA Form No. 3), and a completed FRA Form No.4. See appendix C of this part.

RECORDKEEPING REQUIREMENTS

§ 230.18 Service days.

(a) *Service day record*. For every steam locomotive currently in service, the steam locomotive owner and/or operator shall have available, and be able to show an FRA inspector upon request, a current copy of the service day record that contains the number of service days the steam locomotive has accrued since the last 31, 92, Annual and 1472 service day inspections.

(b) *Service day report*. By the 31st of every January, every steam locomotive owner and/or operator shall file a service day report, FRA Form No. 5, with the Regional Administrator accounting for the days the steam locomotive was in service from January 1 through December 31st of the preceding year. If the steam locomotive was in service zero (0) days during that period, a report must still be filed to prevent the steam locomotive from being considered retired by FRA. (See appendix B of this part.)

(c) *Retirement where no service day reports filed*. Where the steam locomotive owner and/or operator does not file the required service day report for a steam locomotive, that steam locomotive may be considered retired by FRA. The steam locomotive owner and/or operator must complete all 1472 service day inspection items to return a retired steam locomotive to service.

§ 230.19 Posting of FRA Form No. 1 and FRA Form No. 3.

(a) *FRA Form No. 1*. The steam locomotive owner and/or operator shall place a copy of the 31 and 92 service day inspection report (FRA Form No. 1), properly filled out, under transparent cover in a conspicuous place in the cab of the steam locomotive before the inspected boiler is put into service. This FRA Form No. 1 will not be required for the first 31 service days following an annual inspection and the posting of an FRA Form No. 3. (See appendix B of this part.)

(b) *FRA Form No. 3*. In addition to the FRA Form No. 1, the steam locomotive owner and/or operator shall also maintain in the cab a current copy of FRA Form No. 3 in the manner described in paragraph (a) of this section. (See appendix C of this part.)

§ 230.20 Alteration and repair report for steam locomotive boilers.

(a) *Alterations*. When an alteration is made to a steam locomotive boiler, the steam locomotive owner and/or operator shall file an alteration report (FRA Form No. 19), detailing the changes to the locomotive with the FRA Regional Administrator within 30

days from the date the work was completed. This form shall be attached to, and maintained with, the FRA Form No. 4 until such time as a new FRA Form No. 4 reflecting the alteration is submitted to the Regional Administrator. Alteration reports shall be filed and maintained for the life of the boiler. (See appendix B of this part.)

(b) *Welded and riveted repairs to unstayed portions of the boiler*. Whenever welded or riveted repairs are performed on unstayed portions of a steam locomotive boiler, the steam locomotive owner and/or operator shall file with the FRA Regional Administrator, within 30 days from the time the work was completed, a repair report, FRA Form No. 19, that details the work done to the steam locomotive. Repair reports shall be filed and maintained for the life of the boiler. (See appendix B of this part.)

(c) *Welded and riveted repairs to stayed portions of the boiler*. Whenever welded or riveted repairs are performed on stayed portions of a steam locomotive boiler, the steam locomotive owner and/or operator shall complete a repair report (FRA Form No. 19), detailing the work done. Repair reports shall be maintained for the life of the boiler. (See appendix C of this part.)

§ 230.21 Steam locomotive number change.

When a steam locomotive number is changed, the steam locomotive owner and/or operator must reflect the change in the upper right-hand corner of all documentation related to the steam locomotive by showing the old and new numbers:

Old No. 000
New No. XXX.

§ 230.22 Accident reports.

In the case of an accident due to failure, from any cause, of a steam locomotive boiler or any part or appurtenance thereof, resulting in serious injury or death to one or more persons, the railroad on whose line the accident occurred shall immediately make a telephone report of the accident by calling the National Response Center (toll free) at Area Code 800–424–0201. The report shall state the nature of the accident, the number of persons killed or seriously injured, the place at which it occurred, and the location where the steam locomotive may be inspected. Confirmation of this report shall be immediately mailed to the Associate Administrator for Safety, Federal Railroad Administration, Washington, DC 20590, and contain a detailed report of the accident, including, to the extent known, the causes and a complete list of the casualties.

Subpart B—Boilers and Appurtenances

§ 230.23 Responsibility for general construction and safe working pressure.

The steam locomotive owner and operator are responsible for the general design and construction of the steam locomotive boilers under their control. The steam locomotive owner shall establish the safe working pressure for each steam locomotive boiler, after giving full consideration to the general design, workmanship, age, and overall condition of the complete boiler unit. The condition of the boiler unit shall be determined by, among other factors, the minimum thickness of the shell plates, the lowest tensile strength of the plates, the efficiency of the longitudinal joint, the inside diameter of the course, and the maximum allowable stress value allowed. The steam locomotive operator shall not place the steam locomotive in service before ensuring that the steam locomotive's safe working pressure has been established.

ALLOWABLE STRESS

§ 230.24 Maximum allowable stress.

(a) *Maximum allowable stress value*. The maximum allowable stress value on any component of a steam locomotive boiler shall not exceed ¼ of the ultimate tensile strength of its material.

(b) *Safety factor*. When it is necessary to use the code of original construction in boiler calculations, the safety factor value shall not be less than 4.

§ 230.25 Maximum allowable stress on stays and braces.

The maximum allowable stress per square inch of net cross sectional area

on fire box and combustion chamber stays shall be 7,500 psi. The maximum allowable stress per square inch of net cross sectional area on round, rectangular, or gusset braces shall be 9,000 psi.

STRENGTH OF MATERIALS

§ 230.26 Tensile strength of shell plates.

When the tensile strength of steel or wrought-iron shell plates is not known, it shall be taken at 50,000 psi for steel and 45,000 psi for wrought iron.

§ 230.27 Maximum shearing strength of rivets.

The maximum shearing strength of rivets per square inch of cross sectional area shall be taken as follows:

Rivets	Pounds per square inch
Iron Rivets in Single Shear	38,000
Iron Rivets in Double Shear	76,000
Steel Rivets in Single Shear	44,000
Steel Rivets in Double Shear	88,000

§ 230.28 Higher shearing strength of rivets.

A higher shearing strength may be used for rivets when it can be shown through testing that the rivet material used is of such quality as to justify a higher allowable shearing strength.

INSPECTION AND REPAIR

§ 230.29 Inspection and repair.

(a) *Responsibility*. The steam locomotive owner and/or operator shall inspect and repair all steam locomotive boilers and appurtenances under their control. They shall immediately remove from service any boiler that has developed cracks in the barrel. The steam locomotive owner and/or operator shall also remove the boiler from service whenever either of them, or the FRA inspector, considers it necessary due to other defects.

(b) *Repair standards*. (1) All defects disclosed by inspection shall be repaired in accordance with accepted industry standards—which may include established railroad practices, or NBIC or API established standards—before the steam locomotive is returned to service. The steam locomotive owner and/or operator shall not return the steam locomotive boiler or appurtenances to service unless they are in good condition and safe and suitable for service.

(2) Any welding to unstayed portions of the boiler made pursuant to § 230.33 shall be made in accordance with an accepted national standard for boiler repairs. The steam locomotive owner and/or operator shall not return the steam locomotive boiler or appurtenances to service unless they are in good condition and safe and suitable for service.

§ 230.30 Lap-joint seam boilers.

Every boiler having lap-joint longitudinal seams without reinforcing plates shall have sufficient lagging, jacketing, flues, and tubes removed at every annual inspection so that an inspection of the entire joint, inside and out, can be made, taking special care to detect grooving or cracks at the edges of the seams.

§ 230.31 Flues to be removed.

(a) *Inspection of the boiler interior*. During the 1472 service day inspection, the steam locomotive owner and/or operator shall remove all flues of steam locomotive boilers in service, except as provided in paragraph (b) of this section, for the purpose of inspecting the entire interior of the boiler and its bracing. After removing the flues, the steam locomotive owner and/or operator shall enter the boiler to remove scale from the interior and thoroughly clean and inspect it.

(b) *NDE testing*. If the boiler can be thoroughly cleaned and inspected without removing the superheater flues, and it can be shown through appropriate NDE testing methods that they are safe and suitable for service, their removal may not be required at this time. Their removal may be required, however, if the FRA inspector, or the steam locomotive owner and/or operator, considers it necessary due to identifiable safety concerns.

§ 230.32 Time and method of inspection.

(a) *Time of inspection*. The entire boiler shall completely be inspected at the

1472 service day inspection. The jacket, lagging and any other components interfering with the provision of inspection access shall be removed at this time. Those portions of the boiler that are exposed and able to be inspected as required by the daily, 31service day, annual and fifth annual inspections shall be inspected at those times. The interior of the boiler also shall be inspected at each annual inspection, after the completion of any hydrostatic test above MAWP, and whenever a sufficient number of flues are removed to allow examination. The jacket, lagging and any other components shall also be removed to provide inspection access whenever the FRA inspector, or the steam locomotive owner and/or operator, considers it necessary due to identifiable safety concerns.

(b) *Method of inspection.*—(1) *Entire boiler*. During the 1472 service day inspection, the entire boiler shall be examined for cracks, pitting, grooving, or indications of overheating and for damage where mud has collected, or heavy scale formed. The edges of plates, all laps, seams, and points where cracks and defects are likely to develop, shall be thoroughly inspected. Rivets shall be inspected for corrosion and looseness.

(2) *Boiler interior*. When inspecting the boiler interior, it must be seen that braces and stays are taut, that pins are properly secured in place, and that each is in condition to support its proportion of the load. Washout plugs shall be removed for access and visual inspection of the water side of the firebox sheets. Washout plug threads, sleeves and threaded openings shall be examined at this time.

(3) *Boiler exterior*. A thorough inspection shall be made of the entire exterior of the boiler while under hydrostatic pressure.

§ 230.33 Welded repairs and alterations.

(a) *Unstayed portions of the boiler containing alloy steel or carbon steel with a carbon content over 0.25 percent*. Prior to welding on unstayed portions of the boiler, the steam locomotive owner and/or operator shall submit a written request for approval to the FRA Regional Administrator. If the approval is granted, the steam locomotive owner and/or operator shall perform any welding to unstayed portions of the boiler in accordance with an accepted national standard for boiler repairs. The steam locomotive owner and/or operator shall satisfy reporting requirements in § 230.20 at this time.

(b) *Unstayed portions of the boiler containing carbon steel not exceeding 0.25 percent carbon*. The steam locomotive owner and/or operator shall perform any welding to unstayed portions of the boiler in accordance with an accepted national standard for boiler repairs. The steam locomotive owner and/or operator shall satisfy reporting requirements in § 230.20 at this time.

(c) *Wastage*. The steam locomotive owner and/or operator shall submit a written request for approval to the FRA Regional Administrator before performing weld build up on wasted areas of unstayed surfaces of the boiler that exceed a total of 100 square inches or the smaller of 25 percent of minimum required wall thickness or 1/2 inch. Wasted sheets shall not be repaired by weld build up if the wasted sheet has been reduced to less than 60 percent of the minimum required thickness as required by this part.

(d) *Flush patches*. The steam locomotive owner and/or operator shall submit a written request for approval to the FRA Regional Administrator for the installation of flush patches of any size on unstayed portions of the boiler.

(e) *Stayed portions of the boiler*. The steam locomotive owner and/or operator shall perform welded repairs or alterations on stayed portions of the boiler in accordance with established railroad practices, or an accepted national standard for boiler repairs. The steam locomotive owner and/or operator shall satisfy the reporting requirements in § 230.20 at this time.

§ 230.34 Riveted repairs and alterations.

(a) *Alterations to unstayed portions of the boiler*. Prior to making riveted alterations on unstayed portions of the boiler, the steam locomotive owner and/or operator shall submit a written request for approval to the FRA Regional Administrator. If approval is

granted, the steam locomotive owner and/or operator shall perform any riveting to unstayed portions of the boiler in accordance with established railroad practices or an accepted national standard for boiler repairs. The steam locomotive owner and/or operator shall satisfy reporting requirements in § 230.20 at this time.

(b) *Repairs to unstayed portions of the boiler*. The steam locomotive owner and/or operator shall perform any riveted repairs to unstayed portions of the boiler in accordance with established railroad practices, or an accepted national standard for boiler repairs. The steam locomotive owner and/or operator shall satisfy reporting requirements in § 230.20 at this time.

(c) *Repairs to stayed portions of the boiler*. The steam locomotive owner and/or operator shall perform riveted repairs or alterations on stayed portions of the boiler in accordance with established railroad practices or an accepted national standard for boiler repairs. The steam locomotive owner and/or operator shall satisfy reporting requirements in § 230.20 at this time.

PRESSURE TESTING OF BOILERS

§ 230.35 Pressure testing.

The temperature of the steam locomotive boiler shall be raised to at least 70 deg. F any time hydrostatic pressure is applied to the boiler.

§ 230.36 Hydrostatic testing of boilers.

(a) *Time of test*. The locomotive owner and/or operator shall hydrostatically test every boiler at the following times:

(1) During the 1472 service day inspection, and at every annual inspection thereafter;

(2) After making any alteration to the boiler;

(3) After installing a flush patch on an unstayed portion of the boiler; and

(4) After any riveting on an unstayed portion of the boiler.

(b) *Method of testing*. The metal temperature of the boiler shall be between 70 degrees Fahrenheit and 120 degrees Fahrenheit each time it is subjected to any hydrostatic pressure. Hydrostatic testing required by these rules shall be conducted at 25 percent above the MAWP.

(c) *Internal inspection*. An internal inspection of the boiler shall be conducted following any hydrostatic test where the pressure exceeds MAWP.

§ 230.37 Steam test following repairs or alterations.

Upon completion of any repair or alteration, the locomotive owner and/or operator shall conduct a steam test of the boiler with steam pressure raised to between 95 percent and 100 percent of the MAWP. At this time, the boiler shall be inspected to ensure that it is in a safe and suitable condition for service.

STAYBOLTS

§ 230.38 Telltale holes.

(a) *Staybolts less than 8 inches long*. All staybolts shorter than 8 inches, except flexible bolts, shall have telltale holes 3/16 inch to 7/32 inch diameter and at least 1¼ inches deep in the outer end.

(b) *Reduced body staybolts*. On reduced body staybolts, the telltale hole shall extend beyond the fillet and into the reduced section of the staybolt. Staybolts may have through telltale holes.

(c) *Telltale holes kept open*. All telltale holes, except as provided for in § 230.41, must be kept open at all times.

§ 230.39 Broken staybolts.

(a) *Maximum allowable number of broken staybolts*. No boiler shall be allowed to remain in service with two broken staybolts located within 24 inches of each other, as measured inside the firebox or combustion chamber on a straight line. No boiler shall be allowed to remain in service with more than 4 broken staybolts inside the entire firebox and combustion chamber, combined.

(b) *Staybolt replacement*. Broken staybolts must be replaced during the 31 service day inspection, if detected at that time. Broken staybolts detected in between 31 service day inspections must be replaced no later than 30 calendar days from the time of detection. When staybolts 8 inches or less in

length are replaced, they shall be replaced with bolts that have telltale holes 3/16 inch to 7/32 inch in diameter and at least 1¼ inches deep at each end, or that have telltale holes 3/16 inch to 7/32 inch in diameter their entire length. At the time of replacement of broken staybolts, adjacent staybolts shall be inspected.

(c) *Assessment of broken staybolts.* Telltale holes leaking, plugged, or missing shall be counted as broken staybolts.

(d) *Prohibited methods of closing telltale holes.* Welding, forging, or riveting broken staybolt ends is prohibited as a method of closing telltale holes.

§ 230.40 Time and method of staybolt testing.

(a) *Time of hammer testing*—(1) General. All staybolts shall be hammer tested at every 31 service day inspection, except as provided in paragraph (a)(2) of this section. All staybolts also shall be hammer tested under hydrostatic pressure any time hydrostatic pressure above the MAWP specified on the boiler specification form (FRA Form No. 4), is applied to the boiler. (See appendix B of this part.)

(2) Exception for inaccessible staybolts. The removal of brickwork or grate bearers for the purpose of hammer testing staybolts during each 31 service day inspection will not be required if the staybolts behind these structural impediments have a telltale hole 3/16 inch to 7/32 inch in diameter their entire length. Whenever the brickwork or grate bearers are removed for any other reason, however, the bolts shall be inspected at that time.

(b) *Method of hammer testing.* If staybolts are tested while the boiler contains water, the hydrostatic pressure must be not less than 95 percent of the MAWP. The steam locomotive owner and/or operator shall tap each bolt with a hammer and determine broken bolts from the sound or the vibration of the sheet. Whenever staybolts are tested while the boiler is not under pressure, such as during the 31 service day inspection, the staybolt test must be made with all the water drained from the boiler.

§ 230.41 Flexible staybolts with caps.

(a) *General.* Flexible staybolts with caps shall have their caps removed during every 5th annual inspection for the purpose of inspecting the bolts for breakage, except as provided in paragraph (b) of this section.

(b) *Drilled flexible staybolts.* For flexible staybolts that have telltale holes between 3/16 inch and 7/32 inch in diameter, and which extend the entire length of the bolt and into the head not less than one third of the diameter of the head, the steam locomotive owner and/or operator need not remove the staybolt caps if it can be established, by an electrical or other suitable method, that the telltale holes are open their entire length. Any leakage from these telltale holes during the hydrostatic test indicates that the bolt is broken and must be replaced. Before the steam locomotive is placed in service, the inner ends of all telltale holes shall be closed with a fireproof porous material that will keep the telltale holes free of foreign matter and permit steam or water to exit the telltale hole when the bolt is broken or fractured.

(c) *Recordkeeping.* The removal of flexible staybolt caps and other tests shall be reported on FRA Form No. 3. (See appendix B of this part.)

(d) *Testing at request of FRA inspector.* Staybolt caps also shall be removed, or any of the tests in this section made, whenever the FRA inspector or the steam locomotive owner and/or operator considers it necessary due to identifiable safety concerns about the condition of staybolts, staybolt caps or staybolt sleeves.

STEAM GAUGES

§ 230.42 Location of gauges.

Every boiler shall have at least one steam gauge which will correctly indicate the working pressure. The gauge shall be positioned so that it will be kept reasonably cool and can conveniently be read by the engine crew.

§ 230.43 Gauge siphon.

The steam gauge supply pipe shall have a siphon on it of ample capacity to prevent steam from entering the gauge. The supply pipe shall directly enter the boiler and be maintained

steam tight. The supply pipe and its connections shall be cleaned each time the gauge is tested.

§ 230.44 Time of testing.

Steam gauges shall be tested prior to being installed or being reapplied, during the 92 service day inspection, and whenever any irregularity is reported.

§ 230.45 Method of testing.

Steam gauges shall be compared with an accurate test gauge or dead weight tester. While under test load at the MAWP of the boiler to which the gauge will be applied, the gauge shall be set to read that pressure as accurately as the physical limitations of the gauge will allow. Under test the gauge shall read within the manufacturer's tolerance at all points on the gauge up to 25 percent above the allowed pressure. If the manufacturer's tolerance is not known, the gauge must read within 2 percent full scale accuracy at all points on the gauge up to 25 percent above allowed pressure.

§ 230.46 Badge plates.

A metal badge plate showing the allowed steam pressure shall be attached to the boiler backhead in the cab. If boiler backhead is lagged, the lagging and jacket shall be cut away so that the plate can be seen.

§ 230.47 Boiler number.

(a) *Generally*. The builder's number of the boiler, if known, shall be stamped on the steam dome or manhole flange. If the builder's number cannot be obtained, an assigned number, which shall be used in making out specification cards, shall be stamped on the steam dome or manhole flange.

(b) *Numbers after January 10, 1912*. Numbers which are stamped after January 10, 1912 shall be located on the front side of the steam dome or manhole flange at the upper edge of the vertical surface, oriented in a horizontal manner, and have figures at least ⅜ inch high.

(c) *Name of manufacturer or owner*. The number shall be preceded by the name of the manufacturer if the original number is known or the name of the steam locomotive owner if a new number is assigned.

SAFETY RELIEF VALVES

§ 230.48 Number and capacity.

(a) *Number and capacity*. Every boiler shall be equipped with at least two safety relief valves, suitable for the service intended, that are capable of preventing an accumulation of pressure greater than 6 percent above the MAWP under any conditions of service. An FRA inspector may require verification of sufficient safety valve relieving capacity.

(b) *Determination of capacity*. Safety relief valve capacity may be determined by making an accumulation test with the fire in good, bright condition and all steam outlets closed. Additional safety relief valve capacity shall be provided if the safety relief valves allow an excess pressure of more than 6 percent above the MAWP during this test.

§ 230.49 Setting of safety relief valves.

(a) *Qualifications of individual who adjusts*. Safety relief valves shall be set and adjusted by a competent person who is thoroughly familiar with the construction and operation of the valve being set.

(b) *Opening pressures*. At least one safety relief valve shall be set to open at a pressure not exceeding the MAWP. Safety relief valves shall be set to open at pressures not exceeding 6 psi above the MAWP.

(c) *Setting procedures*. When setting safety relief valves, two steam gauges shall be used, one of which must be so located that it will be in full view of the persons engaged in setting such valves; and if the pressure indicated by the gauges varies more than 3 psi they shall be removed from the boiler, tested, and corrected before the safety relief valves are set. Gauges shall in all cases be tested immediately before the safety relief valves are set or any change made in the setting. When setting safety relief valves, the water level shall not be higher than ¾ of the length of the visible water glass, as measured from the bottom of the glass.

(d) *Labeling of lowest set pressure*. The set pressure of the lowest safety relief valve shall be indicated on a tag or label attached to the steam gauge so

that it may be clearly read while observing the steam gauge.

§ 230.50 Time of testing.

All safety relief valves shall be tested, and adjusted if necessary, under steam at every 92 service day inspection, and also whenever any irregularity is reported.

WATER GLASSES AND GAUGE COCKS

§ 230.51 Number and location.

Every boiler shall be equipped with at least two water glasses. The lowest reading of the water glasses shall not be less than 3 inches above the highest part of the crown sheet. If gauge cocks are used, the reading of the lowest gauge cock shall not be less than 3 inches above the highest part of the crown sheet.

§ 230.52 Water glass valves.

All water glasses shall be equipped with no more than two valves capable of isolating the water glass from the boiler. They shall also be equipped with a drain valve capable of evacuating the glass when it is so isolated.

§ 230.53 Time of cleaning.

The spindles of all water glass valves and of all gauge cocks shall be removed and valves and cocks thoroughly cleaned of scale and sediment at every 31 service day inspection, and when testing indicates that the apparatus may be malfunctioning. In addition, the top and bottom passages of the water column shall be cleaned and inspected at each annual inspection.

§ 230.54 Testing and maintenance.

(a) *Testing*. All water glasses must be blown out, all gauge cocks must be tested, and all passages verified to be open at the beginning of each day the locomotive is used, and as often as necessary to ensure proper functioning.

(b) *Maintenance*. Gauge cocks, water column drain valves, and water glass valves must be maintained in such condition that they can easily be opened and closed by hand, without the aid of a wrench or other tool.

§ 230.55 Tubular type water and lubricator glasses and shields.

(a) *Water glasses*. Tubular type water glasses shall be renewed at each 92 service day inspection.

(b) *Shields*. All tubular water glasses and lubricator glasses must be equipped with a safe and suitable shield which will prevent the glass from flying in case of breakage. This shield shall be properly maintained.

(c) *Location and maintenance*. Water glasses and water glass shields shall be so located, constructed, and maintained that the engine crew can at all times have an unobstructed view of the water in the glass from their proper positions in the cab.

§ 230.56 Water glass lamps.

All water glasses must be supplied with a suitable lamp properly located to enable the engine crew to easily see the water in the glass.

INJECTORS, FEEDWATER PUMPS, AND FLUE PLUGS

§ 230.57 Injectors and feedwater pumps.

(a) *Water delivery systems required*. Each steam locomotive must be equipped with at least two means of delivering water to the boiler, at least one of which is a live steam injector.

(b) *Maintenance and testing*. Injectors and feedwater pumps must be kept in good condition, free from scale, and must be tested at the beginning of each day the locomotive is used, and as often as conditions require, to ensure that they are delivering water to the boiler. Boiler checks, delivery pipes, feed water pipes, tank hose and tank valves must be kept in good condition, free from leaks and from foreign substances that would obstruct the flow of water.

(c) *Bracing*. Injectors, feedwater pumps, and all associated piping shall be securely braced so as to minimize vibration.

§ 230.58 Flue plugs.

(a) *When plugging is permitted*. Flues greater than 2¼ inches in outside diameter (OD) shall not be plugged. Flues 2¼ inches in outside diameter (OD) or

smaller may be plugged following failure, provided only one flue is plugged at any one time. Plugs must be removed and proper repairs made no later than 30 days from the time the plug is applied.

(b) *Method of plugging*. When used, flue plugs must be made of steel. The flue must be plugged at both ends. Plugs must be tied together by means of a steel rod not less than ⅝ inch in diameter.

FUSIBLE PLUGS

§ 230.59 Fusible plugs.

If boilers are equipped with fusible plugs, the plugs shall be removed and cleaned of scale each time the boiler is washed but not less frequently than during every 31 service day inspection. Their removal shall be noted on the FRA Form No. 1 or FRA Form No. 3. (See appendix B of this part.)

WASHING BOILERS

§ 230.60 Time of washing.

(a) *Frequency of washing*. All boilers shall thoroughly be washed as often as the water conditions require, but not less frequently than at each 31 service day inspection. The date of the boiler wash shall be noted on the FRA Form No. 1 or FRA Form No. 3. (See appendix B of this part.)

(b) *Plug removal*. All washout plugs, arch tube plugs, thermic siphon plugs, circulator plugs and water bar plugs must be removed whenever locomotive boilers are washed.

(c) *Plug maintenance*. All washout plugs, washout plug sleeves and threaded openings shall be maintained in a safe and suitable condition for service and shall be examined for defects each time the plugs are removed.

(d) *Fusible plugs cleaned*. Fusible plugs shall be cleaned in accordance with § 230.59.

§ 230.61 Arch tubes, water bar tubes, circulators and thermic siphons.

(a) *Frequency of cleaning*. Each time the boiler is washed, arch tubes and water bar tubes shall thoroughly be cleaned mechanically, washed, and inspected. Circulators and thermic siphons shall thoroughly be cleaned, washed and inspected.

(b) *Defects*. Arch tubes and water bar tubes found blistered, bulged, or otherwise defective shall be renewed. Circulators and thermic siphons found blistered, bulged or otherwise defective shall be either repaired or renewed.

(c) *Method of examination*. Arch tubes, water bar tubes and circulators shall be examined using an appropriate NDE method that accurately measures wall thickness at each annual inspection. All arch brick shall be removed for this inspection. If any are found with wall thickness reduced below that required to render them safe and suitable for the service intended at the MAWP specified on the boiler specification FRA Form No. 4, they must be replaced or repaired. (See appendix B of this part.)

STEAM PIPES

§ 230.62 Dry pipe.

Dry pipes subject to pressure shall be examined at each annual inspection to measure wall thickness. Dry pipes with wall thickness reduced below that required to render the pipe suitable for the service intended at the MAWP must be replaced or repaired.

§ 230.63 Smoke box, steam pipes and pressure parts.

The smoke box, steam pipes and pressure parts shall be inspected at each annual inspection, or any other time that conditions warrant. The individual conducting the inspection must enter the smoke box to conduct the inspection, looking for signs of leaks from any of the pressure parts therein and examining all draft appliances.

STEAM LEAKS

§ 230.64 Leaks under lagging.

The steam locomotive owner and/or operator shall take out of service at once any boiler that has developed a leak under the lagging due to a crack in the shell, or to any other condition which may reduce safety. Pursuant to § 230.29, the boiler must be repaired before being returned to service.

§ 230.65 Steam blocking view of engine crew.

The steam locomotive owner and/or operator shall keep the boiler, and its piping and appurtenances, in such repair that they do not emit steam in a manner that obscures the engine crew's vision.

Subpart C—Steam Locomotives and Tenders

§ 230.66 Design, construction, and maintenance.

The steam locomotive owner and operator are responsible for the general design, construction and maintenance of the steam locomotives and tenders under their control.

§ 230.67 Responsibility for inspection and repairs.

The steam locomotive owner and/or operator shall inspect and repair all steam locomotives and tenders under their control. All defects disclosed by any inspection shall be repaired in accordance with accepted industry standards, which may include established railroad practices, before the steam locomotive or tender is returned to service. The steam locomotive owner and/or operator shall not return the steam locomotive or tender to service unless they are in good condition and safe and suitable for service.

SPEED INDICATORS

§ 230.68 Speed indicators.

Steam locomotives that operate at speeds in excess of 20 miles per hour over the general system of railroad transportation shall be equipped with speed indicators. Where equipped, speed indicators shall be maintained to ensure accurate functioning.

ASH PANS

§ 230.69 Ash pans.

Ash pans shall be securely supported from mud-rings or frames with no part less than 2½ inches above the rail. Their operating mechanism shall be so arranged that they may be safely operated and securely closed.

BRAKE AND SIGNAL EQUIPMENT

§ 230.70 Safe condition.

(a) *Pre-departure inspection.* At the beginning of each day the locomotive is used, the steam locomotive operator shall ensure that:

(1) The brakes on the steam locomotive and tender are in safe and suitable condition for service;

(2) The air compressor or compressors are in condition to provide an ample supply of air for the locomotive service intended;

(3) The devices for regulating all pressures are properly performing their functions;

(4) The brake valves work properly in all positions; and

(5) The water has been drained from the air-brake system.

(b) *Brake pipe valve required.* Each steam locomotive shall have a brake pipe valve attached to the front of the tender, the rear of the back cab wall, or adjacent to the exit of a vestibuled cab. The words ''Emergency Brake Valve'' shall be clearly displayed near the valve.

§ 230.71 Orifice testing of compressors.

(a) *Frequency of testing.* The compressor or compressors shall be tested for capacity by orifice test as often as conditions may require, but not less frequently than once every 92 service days.

(b) *Orifice testing criteria.* (1) Compressors in common use, as listed in the following table, shall have orifice test criteria as follows:

Make	Compressor size	Single strokes per minute	Diameter of orifice (in inches)	Air pressure maintained (in pounds)
Westinghouse	9½	120	11/64	60
Westinghouse	11	100	3/16	60
Westinghouse	150 CFM 8½ CC	100	9/32	60
Westinghouse	120 CFM 8½	100	15/64	60
New York	2a	120	5/32	60

Make	Compressor size	Single strokes per minute	Diameter of orifice (in inches)	Air pressure maintained (in pounds)
New York	6a	100	13/64	60
New York	5b	100	15/64	60

NOTE: This table shall be used for altitudes to and including 1,000 feet. For altitudes over 1,000 feet the speed of compressor may be increased 5 single strokes per minute for each 1,000 feet increase in altitude.

(2) For compressors not listed in the table in paragraph (b)(1) of this section, the air pressure to be maintained shall be no less than 80 percent of the manufacturer's rated capacity for the compressor.

§ 230.72 Testing main reservoirs.

(a) *Hammer and hydrostatic testing.* Except as described in paragraphs (b) through (d) of this section, every main reservoir, except those cast integrally with the frame, shall be hammer and hydrostatically tested during each annual inspection. The reservoir shall be hammer tested while empty and with no pressure applied. If no defective areas are detected, a hydrostatic test of MAWP shall be applied.

(b) *Drilling of main reservoirs.* (1) Only welded main reservoir originally constructed to withstand at least five times the MAWP may be drilled over its entire surface with telltale holes that are 3/16 of an inch in diameter. The holes shall be spaced not more than 12 inches apart, measured both longitudinally and circumferentially, and drilled from the outer surface to an extreme depth determined by the following formula:

$$D=(.6PR/(S-.6P))$$

Where:

D = Extreme depth of telltale holes in inches but in no case less than one-sixteenth inch;
P = certified working pressure in psi;
S = ⅕ of the minimum specified tensile strength of the material in psi; and
R = inside radius of the reservoir in inches.

(2) One row of holes shall be drilled lengthwise of the reservoir on a line intersecting the drain opening. When main reservoirs are drilled as described in paragraph (b)(1) of this section, the hydrostatic and hammer tests described in paragraph (a) of this section are not required during the annual inspection. Whenever any telltale hole shall have penetrated the interior of any reservoir, the reservoir shall be permanently withdrawn from service.

(c) *Welded main reservoirs without longitudinal lap seams.* For welded main reservoirs that do not have longitudinal lap seams, an appropriate NDE method that can measure the wall thickness of the reservoir may be used instead of the hammer test and hydrostatic test required in paragraph (a) of this section. The spacing of the sampling points for wall thickness shall not be greater than 12 inches longitudinally and circumferentially. The reservoir shall permanently be withdrawn from service where the NDE testing reveals wall thickness less than the value determined by the following formula:

$$t=(PR/(S-.6P)$$

Where:

t = Minimum value for wall thickness;
P = Certified working pressure in psi;
S = ⅕ of the minimum specified tensile strength of the material in psi, or 10,000 psi if the tensile strength is unknown; and
R = Inside radius of the reservoir in inches.

(d) *Welded or riveted longitudinal lap seam main reservoirs.* (1) For welded or riveted longitudinal lap seam main reservoirs, an appropriate NDE method that can measure wall thickness of the reservoir shall be used instead of, or in addition to, the hammer test and hydrostatic test. The spacing of the sampling points for wall thickness shall not be greater than 12 inches longitudinally and circumferentially. Particular care shall be taken to measure along the longitudinal seam on both plates at an interval of no more than 6 inches longitudinally. The reservoir shall be withdrawn permanently from service where NDE testing reveals wall thickness less than the value determined by the following formula:

$$t=(PR/(0.5S-0.6P))$$

Where:

t = Minimum value for wall thickness;
P = Certified working pressure in psi;

S = ⅕ of the minimum specified tensile strength of the material in psi, or 10,000 psi if the tensile strength of steel is unknown; and
R = Inside radius of the reservoir in inches.

(2) Repairs of reservoirs with reduced wall thickness are prohibited.

§ 230.73 Air gauges.

(a) *Location*. Air gauges shall be so located that they may be conveniently read by the engineer from his or her usual position in the cab. No air gauge may be more than 3 psi in error.

(b) *Frequency of testing*. Air gauges shall be tested prior to reapplication following removal, as well as during the 92 service day inspection and whenever any irregularity is reported.

(c) *Method of testing*. Air gauges shall be tested using an accurate test gauge or dead weight tester designed for this purpose.

§ 230.74 Time of cleaning.

All valves in the air brake system, including related dirt collectors and filters, shall be cleaned and tested in accordance with accepted brake equipment manufacturer's specifications, or as often as conditions require to maintain them in a safe and suitable condition for service, but not less frequently than after 368 service days or during the second annual inspection, whichever occurs first.

§ 230.75 Stenciling dates of tests and cleaning.

The date of testing and cleaning and the initials of the shop or station at which the work is done, shall legibly be stenciled in a conspicuous place on the tested parts or placed on a card displayed under a transparent cover in the cab of the steam locomotive.

§ 230.76 Piston travel.

(a) *Minimum piston travel*. The minimum piston travel shall be sufficient to provide proper brake shoe clearance when the brakes are released.

(b) *Maximum piston travel*. The maximum piston travel when steam locomotive is standing shall be as follows:

Type of wheel brake	Maximum piston travel (in inches)
Cam Type Driving Wheel Brake	3½
Other forms of Driving Wheel Brake	6
Engine Truck Brake	8
Tender Brake	9

§ 230.77 Foundation brake gear.

(a) *Maintenance*. Foundation brake gear shall be maintained in a safe and suitable condition for service. Levers, rods, brake beams, hangers, and pins shall be of ample strength, and shall not be fouled in any way which will affect the proper operation of the brake. All pins shall be properly secured in place with cotter pine, split keys, or nuts. Brake shoes must be properly applied and kept approximately in line with the tread of the wheel.

(b) *Distance above the rails*. No part of the foundation brake gear of the steam locomotive or tender shall be less than 2½ inches above the rails.

§ 230.78 Leakage.

(a) *Main reservoirs and related piping*. Leakage from main reservoir and related piping shall be tested at every 92 service day inspection and shall not exceed an average of 3 psi per minute in a test of 3 minutes duration that is made after the pressure has been reduced to 60 percent of the maximum operating pressure.

(b) *Brake cylinders*. Leakage from brake cylinders shall be tested at every 92 service day inspection. With a full service application from maximum brake pipe pressure, and with communication to the brake cylinders closed, the brakes on the steam locomotive and tender must remain applied for a minimum of 5 minutes.

(c) *Brake pipes*. Steam locomotive brake pipe leakage shall be tested at the beginning of each day the locomotive is used, and shall not exceed 5 psi per minute.

§ 230.79 Train signal system.

Where utilized, the train signal system, or any other form of on-board communication, shall be tested and known to be in safe and suitable condition for service at the beginning of each day the locomotive is used.

CABS, WARNING SIGNALS, SANDERS AND LIGHTS

§ 230.80 Cabs.

(a) *General provisions.* Cabs shall be securely attached or braced and maintained in a safe and suitable condition for service. Cab windows of steam locomotives shall provide an undistorted view of the track and signals for the crew from their normal position in the cab. Cab floors shall be kept free of tripping or slipping hazards. The cab climate shall be maintained to provide an environment that does not unreasonably interfere with the engine crew's performance of their duties under ordinary conditions of service.

(b) *Steam pipes.* Steam pipes shall not be fastened to the cab. New construction or renewals made of iron or steel pipe greater than ⅛ inch NPS that are subject to boiler pressure in cabs shall have a minimum wall thickness equivalent to schedule 80 pipe, with properly rated valves and fittings. Live steam heating radiators must not be fastened to the cab. Exhaust steam radiators may be fastened to the cab.

(c) *Oil-burning steam locomotives.* If the cab is enclosed, oil burning steam locomotives that take air for combustion through the fire-door opening shall have a suitable conduit extending from the fire-door to the outside of the cab.

§ 230.81 Cab aprons.

(a) *General provisions.* Cab aprons shall be of proper length and width to ensure safety. Cab aprons shall be securely hinged, maintained in a safe and suitable condition for service, and roughened, or other provision made, to afford secure footing.

(b) *Width of apron.* The cab apron shall be of a sufficient width to prevent, when the drawbar is disconnected and the safety chains or the safety bars are taut, the apron from dropping between the steam locomotive and tender.

§ 230.82 Fire doors.

(a) *General provisions.* Each steam locomotive shall have a fire door which shall latch securely when closed and which shall be maintained in a safe and suitable condition for service. Fire doors on all oil-burning locomotives shall be latched securely with a pin or key.

(b) *Mechanically operated fire doors.* Mechanically operated fire doors shall be so constructed and maintained that they may be operated by pressure of the foot on a pedal, or other suitable appliance, located on the floor of the cab or tender at a suitable distance from the fire door, so that they may be conveniently operated by the person firing the steam locomotive.

(c) *Hand-operated doors.* Hand operated fire doors shall be so constructed and maintained that they may be conveniently operated by the person firing the steam locomotive.

§ 230.83 Cylinder cocks.

Each steam locomotive shall be equipped with cylinder cocks which can be operated from the cab of the steam locomotive. All cylinder cocks shall be maintained in a safe and suitable condition for service.

§ 230.84 Sanders.

Steam locomotives shall be equipped with operable sanders that deposit sand on the rail head in front of a set of driving wheels. Sanders shall be tested at the beginning of each day the locomotive is used.

§ 230.85 Audible warning device.

(a) *General provisions.* Each steam locomotive shall be equipped with an audible warning device that produces a minimum sound level of 96db(A) at 100 feet in front of the steam locomotive in its direction of travel. The device shall be arranged so that it may conveniently be operated by the engineer from his or her normal position in the cab.

(b) *Method of measurement.* Measurement of the sound level shall be made using a sound level meter conforming, at a minimum, to the requirements of ANSI S1.4–1971, Type 2, and set to an A-weighted slow response. While the steam locomotive is on level, tangent track, the microphone shall be positioned 4 feet above the ground at the center line of the track and shall be oriented with respect to the sound source in accordance with the microphone manufacturer's recommendations.

§ 230.86 Required illumination.

(a) *General provisions.* Each steam locomotive used between sunset and sunrise shall be equipped with an operable headlight that provides illumination sufficient for a steam locomotive engineer in the cab to see, in a clear atmosphere, a dark object as large as a man of average size standing at least 800 feet ahead and in front of such headlight. If a steam locomotive is regularly required to run backward for any portion of its trip other than to pick up a detached portion of its train or to make terminal movements, it shall also be equipped on its rear end with an operable headlight that is capable of providing the illumination described in this paragraph (a).

(b) *Dimming device.* Such headlights shall be provided with a device whereby the light from same may be diminished in yards and at stations or when meeting trains.

(c) *Where multiple locomotives utilized.* When two or more locomotives are used in the same train, the leading locomotive only will be required to display a headlight.

§ 230.87 Cab lights.

Each steam locomotive shall have cab lights that sufficiently illuminate the control instruments, meters and gauges to allow the engine crew to make accurate readings from their usual and proper positions in the cab. These lights shall be so located and constructed that the light will shine only on those parts requiring illumination and does not interfere with the engine crew's vision of the track and signals. Each steam locomotive shall also have a conveniently located additional lamp that can be readily turned on and off by the persons operating the steam locomotive and that provides sufficient illumination to read train orders and timetables.

THROTTLES AND REVERSING GEAR

§ 230.88 Throttles.

Throttles shall be maintained in safe and suitable condition for service, and efficient means shall be provided to hold the throttle lever in any desired position.

§ 230.89 Reverse gear.

(a) *General provisions.* Reverse gear, reverse levers, and quadrants shall be maintained in a safe and suitable condition for service. Reverse lever latch shall be so arranged that it can be easily disengaged, and provided with a spring which will keep it firmly seated in quadrant. Proper counterbalance shall be provided for the valve gear.

(b) *Air-operated power reverse gear.* Steam locomotives that are equipped with air operated power reverse gear shall be equipped with a connection whereby such gear may be operated by steam or by an auxiliary supply of air in case of failure of the main reservoir air pressure. The operating valve handle for such connection shall be conveniently located in the cab of the locomotive and shall be plainly marked. If an independent air reservoir is used as the source of the auxiliary supply for the reverse gear, it shall be provided with means to automatically prevent loss of pressure in event of failure of the main reservoir air pressure.

(c) *Power reverse gear reservoirs.* Power reverse gear reservoirs, if provided, must be equipped with the means to automatically prevent the loss of pressure in the event of a failure of main air pressure and have storage capacity for not less than one complete operating cycle of control equipment.

DRAW GEAR AND DRAFT SYSTEMS

§ 230.90 Draw gear between steam locomotive and tender.

(a) *Maintenance and testing.* The draw gear between the steam locomotive and tender, together with the pins and fastenings, shall be maintained in safe and suitable condition for service. The pins and drawbar shall be removed and tested for defects using an appropriate NDE method at every annual inspection. Where visual inspection does not disclose any defects, an additional NDE testing method shall be employed. Suitable means for securing the drawbar pins in place shall be provided. Inverted drawbar pins shall be held in place by plate or stirrup.

(b) *Safety bars and chains generally.* One or more safety bar(s) or two or more safety chains shall be provided

between the steam locomotive and tender. The combined strength of the safety chains or safety bar(s) and their fastenings shall be not less than 50 percent of the strength of the drawbar and its connections. These shall be maintained in safe and suitable condition for service, and inspected at the same time draw gear is inspected.

(c) *Minimum length of safety chains or bars.* Safety chains or safety bar(s) shall be of the minimum length consistent with the curvature of the railroad on which the steam locomotive is operated.

(d) *Lost motion.* Lost motion between steam locomotives and tenders not equipped with spring buffers shall be kept to a minimum and shall not exceed ½ inch.

(e) *Spring buffers.* When spring buffers are used between steam locomotives and tenders the spring shall be applied with not less than ¾ inch compression, and shall at all times be under sufficient compression to keep the chafing faces in contact.

§ 230.91 Chafing irons.

Chafing irons that permit proper curving shall be securely attached to the steam locomotive and tender, and shall be maintained to permit lateral and vertical movement.

§ 230.92 Draw gear and draft systems.

Couplers, draft gear and attachments on steam locomotives and tenders shall be securely fastened, and maintained in safe and suitable condition for service.

DRIVING GEAR

§ 230.93 Pistons and piston rods.

(a) *Maintenance and testing.* Pistons and piston rods shall be maintained in safe and suitable condition for service. Piston rods shall be inspected for cracks each time they are removed, and shall be renewed if found defective.

(b) *Fasteners.* Fasteners (keys, nuts, etc.) shall be kept tight and shall have some means to prevent them from loosening or falling out of place.

§ 230.94 Crossheads.

Crossheads shall be maintained in a safe and suitable condition for service, with not more than ¼ inch vertical or 5/16 inch lateral clearance between crossheads and guides.

§ 230.95 Guides.

Guides shall be securely fastened and maintained in a safe and suitable condition for service.

§ 230.96 Main, side, and valve motion rods.

(a) *General.* Main, side or valve motion rods developing cracks or becoming otherwise defective shall be removed from service immediately and repaired or renewed.

(b) *Repairs.* Repairs, and welding of main, side or valve motion rods shall be made in accordance with an accepted national standard. The steam locomotive owner and/or operator shall submit a written request for approval to the FRA Regional Administrator prior to welding defective main rods, side rods, and valve gear components.

(c) *Bearings and bushings.* Bearings and bushings shall so fit the rods as to be in a safe and suitable condition for service, and means shall be provided to prevent bushings from turning in the rod. Straps shall fit and be securely bolted to rods. Floating bushings need not be provided with means to prevent bushings from turning.

(d) *Side motion of rods.* The total amount of side motion of each rod on its crank pin shall not exceed ¼ inch.

(e) *Oil and grease cups.* Oil and grease cups shall be securely attached to rods, and grease cup plugs shall be equipped with a suitable fastening that will prevent them from being ejected.

(f) *Main rod bearings.* The bore of main rod bearings shall not exceed pin diameters more than 3/32 inch at front or back end. The total lost motion at both ends shall not exceed 5/32 inch.

(g) *Side rod bearings.* The bore of side rod bearings shall not exceed pin diameters more than 5/32 inch on main pin nor more than 3/16 inch on other pins.

§ 230.97 Crank pins.

(a) *General provisions.* Crank pins shall be securely applied. Securing the fit of a loose crank pin by shimming, prick punching, or welding is not permitted.

(b) *Maintenance.* Crank pin collars and collar fasteners shall be maintained in a safe and suitable condition for service.

RUNNING GEAR

§ 230.98 Driving, trailing, and engine truck axles.

(a) *Condemning defects.* Driving, trailing, and engine truck axles with any of the following defects shall be removed from service immediately and repaired (see appendix A of this part for inspection requirements):

(1) Bent axle;

(2) Cut journals that cannot be made to run cool without turning;

(3) Transverse seams in iron or steel axles;

(4) Seams in axles causing journals to run hot;

(5) Axles that are unsafe on account of usage, accident or derailment;

(6) Any axle worn ½ inch or more in diameter below the original/new journal diameter, except as provided in paragraph (a)(7) of this section;

(7) Any driving axles other than main driving axles with an original or new diameter greater than 6 inches that are worn ¾ inch or more in diameter below the original/new diameter.

(b) *Journal diameter stamped.* For steam locomotives with plain bearings, the original/new journal diameter shall be stamped on one end of the axle no later than January 18, 2005.

§ 230.99 Tender truck axles.

The minimum diameters of axles for various axle loads shall be as follows:

Axle load (in pounds)	Minimum diameter of journal (in inches)	Minimum diameter of wheel seat (in inches)	Minimum diameter of center (in inches)
50000	5½	7⅜	6 7/16
38000	5	6¾	5⅞
31000	4½	6¼	5 5/16
22000	3¾	5	4⅜
15000	3¼	4⅝	3⅞

§ 230.100 Defects in tender truck axles and journals.

(a) *Tender truck axle condemning defects.* Tender truck axles with any of the following defects shall be removed from service immediately and repaired:

(1) Axles that are bent;

(2) Collars that are broken, cracked, or worn to ¼ inch or less in thickness;

(3) Truck axles that are unsafe on account of usage, accident, or derailment;

(4) A fillet in the back shoulder that is worn out; or

(5) A gouge between the wheel seats that is more than ⅛ of an inch in depth.

(b) *Tender truck journal condemning defects.* Tender truck journals with any of the following defects shall be removed from service immediately and repaired :

(1) Cut journals that cannot be made to run cool without turning;

(2) Seams in axles causing journals to run hot;

(3) Overheating, as evidenced by pronounced blue black discoloration;

(4) Transverse seams in journals of iron or steel axles; or

(5) Journal surfaces having any of the following:

(i) A circumferential score;

(ii) Corrugation;

(iii) Pitting;

(iv) Rust;

(v) Etching.

§ 230.101 Steam locomotive driving journal boxes.

(a) *Driving journal boxes.* Driving journal boxes shall be maintained in a safe and suitable condition for service. Not more than one shim may be used between the box and bearing.

(b) *Broken bearings.* Broken bearings shall be renewed.

(c) *Loose bearings.* Loose bearings shall be repaired or renewed.

§ 230.102 Tender plain bearing journal boxes.

Plain bearing journal boxes with the following defects shall be removed from service immediately and repaired:

(a) A box that does not contain visible free oil;

(b) A box lid that is missing, broken, or open except to receive servicing;

(c) A box containing foreign matter, such as dirt, sand, or coal dust that can reasonably be expected to damage the bearing; or have a detrimental effect on the lubrication of the journal and bearing;

(d) A lubricating pad that:

(1) Is missing;

(2) Is not in contact with the journal;

(3) Has a tear extending half the length or width of the pad, or more, except by design;

(4) Shows evidence of having been scorched, burned, or glazed;

(5) Contains decaying or deteriorated fabric that impairs proper lubrication of the pad;

(6) Has an exposed center core (except by design); or

(7) Has metal parts contacting the journal;

(e) A plain bearing that:

(1) Is missing, cracked, broken;

(2) Has a bearing liner loose;

(3) Has a broken out piece; or

(4) Has indications of having been overheated, as evidenced by:

(i) Melted babbitt:

(ii) Smoke from hot oil; or

(iii) Journal surface damage; or

(f) A plain bearing wedge that:

(1) Is missing, cracked or broken; or

(2) Is not located in its design position.

§ 230.103 Tender roller bearing journal boxes.

Tender roller bearing journal boxes shall be maintained in a safe and suitable condition.

§ 230.104 Driving box shoes and wedges.

Driving box shoes and wedges shall be maintained in a safe and suitable condition for service.

§ 230.105 Lateral motion.

(a) *Condemning limits.* The total lateral motion or play between the hubs of the wheels and the boxes on any pair of wheels shall not exceed the following limits:

	Inches
Engine truck wheels (with swing centers)	1
Engine truck wheels (with rigid centers)	1½
Trailing truck wheels	1
Driving wheels	¾

(b) *Limits increased.* These limits may be increased on steam locomotives operating on track where the curvature exceeds 20 degrees when it can be shown that conditions require additional lateral motion.

(c) *Non-interference with other parts.* The lateral motion shall in all cases be kept within such limits that the driving wheels, rods, or crank pins will not interfere with other parts of the steam locomotive.

TRUCKS, FRAMES AND EQUALIZING SYSTEM

§ 230.106 Steam locomotive frame.

(a) *Maintenance and inspection.* Frames, decks, plates, tailpieces, pedestals, and braces shall be maintained in a safe and suitable condition for service, and shall be cleaned and thoroughly inspected as often as necessary to maintain in a safe and suitable condition for service with cleaning intervals, in any case, not to exceed every 1472 service days.

(b) *Broken frames.* Broken frames properly patched or secured by clamps or other suitable means which restores the rigidity of the frame are permitted.

§ 230.107 Tender frame and body.

(a) *Maintenance.* Tender frames shall be maintained in a safe and suitable condition for service.

(b) *Height difference.* The difference in height between the deck on the tender and the cab floor or deck on the steam locomotive shall not exceed 1½ inches.

(c) *Gangway minimum width.* The minimum width of the gangway between steam locomotive and tender, while standing on tangent track, shall be 16 inches.

(d) *Tender frame condemning defects.* A tender frame with any of the following

defects shall be removed from service immediately and repaired:

(1) Portions of the tender frame or body (except wheels) that have less than a 2½ inches clearance from the top of rail;

(2) Tender center sill that is broken, cracked more than 6 inches, or permanently bent or buckled more than 2½ inches in any six foot length;

(3) Tender coupler carrier that is broken or missing;

(4) Tender center plate, any portion of which is missing or broken or that is not properly secured; or

(5) Tender that has a broken side sill, crossbearer, or body bolster.

§ 230.108 Steam locomotive leading and trailing trucks.

(a) *Maintenance.* Trucks shall be maintained in safe and suitable condition for service. Center plates shall fit properly, and the male center plate shall extend into the female center plate not less than ¾ inch. All centering devices shall be properly maintained and shall not permit lost motion in excess of ½ inch.

(b) *Safety chain required.* A suitable safety chain shall be provided at each front corner of all four wheel engine trucks.

(c) *Clearance required.* All parts of trucks shall have sufficient clearance to prevent them from interfering with any other part of the steam locomotive.

§ 230.109 Tender trucks.

(a) *Tender truck frames.* A tender truck frame shall not be broken, or have a crack in a stress area that affects its structural integrity. Tender truck center plates shall be securely fastened, maintained in a safe and suitable condition for service, and provided with a center pin properly secured. The male center plate must extend into the female center plate at least ¾ inch. Shims may be used between truck center plates.

(b) *Tender truck bolsters.* Truck bolsters shall be maintained approximately level.

(c) *Condemning defects for springs or spring rigging.* Springs or spring rigging with any of the following defects shall be taken out of service immediately and renewed or properly repaired:

(1) An elliptical spring with its top (long) leaf or any other five leaves in the entire spring pack broken;

(2) A broken coil spring or saddle;

(3) A coil spring that is fully compressed;

(4) A broken or cracked equalizer, hanger, bolt, gib or pin;

(5) A broken coil spring saddle; and

(6) A semi-elliptical spring with a top (long) leaf broken or two leaves in the top half broken, or any three leaves in the entire spring broken.

(d) *Tender securing arrangement.* Where equipped, tender devices and/or securing arrangements intended to prevent the truck and tender body from separating in case of derailment shall be maintained in a safe and suitable condition for service.

(e) *Side bearings and truck centering devices.* Where equipped, side bearings and truck centering devices shall be maintained in a safe and suitable condition for service.

(f) *Friction side bearings.* Friction side bearings shall not be run in contact, and shall not be considered to be in contact if there is clearance between them on either side when measured on tangent level track.

(g) *Side bearings.* All rear trucks shall be equipped with side bearings. When the spread of side bearings is 50 inches, their maximum clearance shall be ⅜ inch on each side for rear trucks and ¾ inch on each side for front trucks, where used. When the spread of the side bearings is increased, the maximum clearance shall be increased proportionately.

§ 230.110 Pilots.

(a) *General provisions.* Pilots shall be securely attached, properly braced, and maintained in a safe and suitable condition for service.

(b) *Minimum and maximum clearance.* The minimum clearance of pilot above the rail shall be 3 inches and the maximum clearance shall be 6 inches measured on tangent level track.

§ 230.111 Spring rigging.

(a) *Arrangement of springs and equalizers.* Springs and equalizers shall be

arranged to ensure the proper distribution of weight to the various wheels of the steam locomotive, maintained approximately level and in a safe and suitable condition for service. Adjusting weights by shifting weights from one pair of wheels to another is permissible.

(b) *Spring or spring rigging condemning defects.* Springs or spring rigging with any of the following defects shall be removed from service immediately and renewed or properly repaired:

(1) Top leaf broken or two leaves in top half or any three leaves in spring broken. (The long side of a spring to be considered the top.) Broken springs not exceeding these requirements may be repaired by applying clips providing the clips can be made to remain in place;

(2) Any spring with leaves excessively shifting in the band;

(3) Broken coil springs; or

(4) Broken driving box saddle, equalizer, hanger, bolt, or pin.

WHEELS AND TIRES

§ 230.112 Wheels and tires.

(a) *Mounting.* Wheels shall be securely mounted on axles. Prick punching or shimming the wheel fit will not be permitted. The diameter of wheels on the same axle shall not vary more than 3/32 inch.

(b) *Gage.* Wheels used on standard gage track will be out of gage if the inside gage of flanges, measured on base line is less than 53 inches or more than 53⅜ inches. Wheels used on less than standard gage track will be out of gage if the inside gage of flanges, measured on base line, is less than the relevant track gage less 3½ inches or more than the relevant track gage less 3⅛ inches.

(c) *Flange distance variance.* The distance back to back of flanges of wheels mounted on the same axle shall not vary more than ¼ inch.

(d) *Tire thickness.* Wheels may not have tires with a minimum thickness less than that indicated in the table in this paragraph (d). When retaining rings are used, measurements of tires to be taken from the outside circumference of the ring, and the minimum thickness of tires may be as much below the limits specified earlier in this paragraph (d) as the tires extend between the retaining rings, provided it does not reduce the thickness of the tire to less than 1⅛ inches from the throat of flange to the counterbore for the retaining rings. The required minimum thickness for tires, by wheel center diameter and weight per axle, is as follows:

Weight per axle (weight on drivers divided by number of pairs of driving wheels)	Diameter of wheel center (inches)	Minimum thickness (inches)
30,000 pounds and under	44 and under	1¼
	Over 44 to 50	1 5/16
	Over 50 to 56	1⅜
	Over 56 to 62	1 7/16
	Over 62 to 68	1½
	Over 68 to 74	1 9/16
	Over 74	1⅝
Over 30,000 to 35,000 pounds	44 and under	1 5/16
	Over 44 to 50	1⅜
	Over 50 to 56	1 7/16
	Over 56 to 62	1½
	Over 62 to 68	1 9/16
	Over 68 to 74	1⅝
	Over 74	1 11/16
Over 35,000 to 40,000 pounds	44 and under	1⅜
	Over 44 to 50	1 7/16
	Over 50 to 56	1½
	Over 56 to 62	1 9/16
	Over 62 to 68	1⅝
	Over 68 to 74	1 11/16
	Over 74	1¾
Over 40,000 to 45,000 pounds	44 and under	1 7/16
	Over 44 to 50	1½
	Over 50 to 56	1 9/16
	Over 56 to 62	1⅝
	Over 62 to 68	1 11/16
	Over 68 to 74	1¾
	Over 74	1 13/16

Weight per axle (weight on drivers divided by number of pairs of driving wheels)	Diameter of wheel center (inches)	Minimum thickness (inches)
Over 45,000 to 50,000 pounds	44 and under	1½
	Over 44 to 50	19/16
	Over 50 to 56	1⅝
	Over 56 to 62	111/16
	Over 62 to 68	1¾
	Over 68 to 74	113/16
	Over 74	1⅞
Over 50,000 to 55,000 pounds	44 and under	19/16
	Over 44 to 50	1⅝
	Over 50 to 56	111/16
	Over 56 to 62	1¾
	Over 62 to 68	113/16
	Over 68 to 74	1⅞
	Over 74	115/16
Over 55,000 pounds	44 and under	1⅝
	Over 44 to 50	111/16
	Over 50 to 56	1¾
	Over 56 to 62	113/16
	Over 62 to 68	1⅞
	Over 68 to 74	115/16
	Over 74	2

(e) *Tire width*. Flanged tires shall be no less than 5½ inches wide for standard gage and no less than 5 inches wide for narrow gage. Plain tires shall be no less than 6 inches wide for standard gage and no less than 5½ inches wide for narrow gage.

§ 230.113 Wheels and tire defects.

Steam locomotive and tender wheels or tires developing any of the defects listed in this section shall be removed from service immediately and repaired. Except as provided in § 230.114, welding on wheels and tires is prohibited. A wheel that has been welded is a welded wheel for the life of the wheel.

(a) *Cracks or breaks*. Wheels and tires may not have a crack or break in the flange, tread, rim, plate, hub or brackets.

(b) *Flat spots*. Wheels and tires may not have a single flat spot that is 2½ inches or more in length, or two adjoining spots that are each two or more inches in length.

(c) *Chipped flange*. Wheels and tires may not have a gouge or chip in the flange that is more than 1½ inches in length and ½ inch in width.

(d) *Broken rims*. Wheels and tires may not have a circumferentially broken rim if the tread, measured from the flange at a point ⅝ inch above the tread, is less than 3¾ inches in width.

(e) *Shelled-out spots*. Wheels and tires may not have a shelled-out spot 2½ inches or more in length, or two adjoining spots that are each two or more inches in length, or so numerous as to endanger the safety of the wheel.

(f) *Seams*. Wheels and tires may not have a seam running lengthwise that is within 3¾ inches of the flange.

(g) *Worn flanges*. Wheels and tires may not have a flange worn to a 15/16 inch thickness or less, as measured at a point ⅜ inch above the tread.

(h) *Worn treads*. Wheels and tires may not have a tread worn hollow 5/16 inch or more.

(i) *Flange height*. Wheels and tires may not have a flange height of less than 1 inch nor more than 1½ inches, as measured from the tread to the top of the flange.

(j) *Rim thickness*. Wheels may not have rims less than 1 inch thick.

(k) *Wheel diameter*. Wheels may not have wheel diameter variance, for wheels on the same axle or in the same driving wheel base, greater than 3/32 inch, when all tires are turned or new tires applied to driving and trailing wheels. When a single tire is applied, the diameter must not vary more than 3/32 inch from that of the opposite wheel on the same axle. When a single pair of tires is applied the diameter must be within 3/32 inch of the average diameter of the wheels in the driving wheel base to which they are applied.

§ 230.114 Wheel centers.

(a) *Filling blocks and shims.* Driving and trailing wheel centers with divided rims shall be properly fitted with iron or steel filling blocks before the tires are applied, and such filling blocks shall be properly maintained. When shims are inserted between the tire and the wheel center, not more than two thicknesses of shims may be used, one of which must extend entirely around the wheel. The shim which extends entirely around the wheel may be in three or four pieces, providing they do not lap.

(b) *Wheel center condemning defects.* Wheel centers with any of the following defects shall be removed from service immediately and repaired:

(1) Wheels centers loose on axle;

(2) Broken or defective tire fastenings;

(3) Broken or cracked hubs, plates, bolts or spokes, except as provided in paragraph (b)(4) of this section; or

(4) Driving or trailing wheel center with three adjacent spokes or 25 percent or more of the spokes in the wheel broken.

(c) *Wheel center repairs.* Wheel centers may be repaired by welding or brazing provided that the defect can properly be so repaired and, following the repair, the crankpin and axle shall remain tight in the wheel. Banding of the hub is permitted.

(d) *Counterbalance maintenance.* Wheel counterbalances shall be maintained in a safe and suitable condition for service.

STEAM LOCOMOTIVE TANKS

§ 230.115 Feed water tanks.

(a) *General provisions.* Tanks shall be maintained free from leaks, and in safe and suitable condition for service. Suitable screens must be provided for tank wells or tank hose and shall be maintained in a manner that allows the unobstructed flow of water. Feed water tanks shall be equipped with a device that permits the measurement of the quantity of water in the tender feed water tank from the cab or tender deck of the steam locomotive. Such device shall be properly maintained.

(b) *Inspection frequency.* As often as conditions warrant but not less frequently than every 92 service days, the interior of the tank shall be inspected, and cleaned if necessary.

(c) *Top of tender.* Top of tender behind fuel space shall be kept clean, and means provided to carry off excess water. Suitable covers shall be provided for filling holes.

§ 230.116 Oil tanks.

The oil tanks on oil burning steam locomotives shall be maintained free from leaks. The oil supply pipe shall be equipped with a safety cut-off device that:

(a) Is located adjacent to the fuel supply tank or in another safe location;

(b) Closes automatically when tripped and that can be reset without hazard; and

(c) Can be hand operated from clearly marked locations, one inside the cab and one accessible from the ground on each exterior side of the steam locomotive.

APPENDIX A TO PART 230—INSPECTION REQUIREMENTS

The lists in this appendix are intended as guidance only. Adherence to this list does not relieve the steam locomotive owner and/or operator of responsibility for either: (1) Completing the inspection and maintenance requirements described in this part; or (2) ensuring that the steam locomotive, tender and its parts and appurtenances are safe and suitable for service.

Daily Inspection Requirements; § 230.13

1. Observance of lifting pressure of the lowest safety valve.
2. Testing of water glasses and gauge cocks.*
3. Inspection of tubular water glass shields.
4. Inspection of all cab lamps.*
5. Inspection of boiler feedwater delivery systems.*
6. Inspection of lagging for indication of leaks.
7. Inspection for leaks obstructing vision of engine crew.
8. Observance of compressor(s) and governor to ascertain proper operation.*
9. Inspection of brake and signal equipment.*
10. Inspection of brake cylinders for piston travel.
11. Inspection of foundation brake gear.
12. Inspection of sanders.*
13. Inspection of draw gear and chafing irons.

14. Inspection of draft gear.
15. Inspection of crossheads and guides.
16. Inspection of piston rods and fasteners.
17. Inspection of main, side, and valve motion rods.
18. Inspection of headlights and classification lamps.*
19. Inspection of running gear.
20. Inspection of tender frames and tanks.
21. Inspection of tender trucks for amount of side bearing clearance.

NOTE: All items marked (*) should be checked at the beginning of each day the locomotive is used.

31 Service Day Inspection Requirements; § 230.14

1. Washing of boiler.
2. Cleaning and inspection of water glass valves and gauge cocks.
3. Cleaning, washing and inspection of arch tubes, water bar tubes, circulators and siphons.
4. Removal and inspection of all washout and water tube plugs.
5. Testing of all staybolts.
6. Removal, cleaning and inspection of fusible plugs (if any).

92 Service Day Inspection Requirements; § 230.15

1. Removal and testing of all air and steam gauges.
2. Cleaning of steam gauge siphon pipe.
3. Renewal of tubular water glasses.
4. Testing and adjusting of safety relief valves.
5. Testing of main reservoir and brake cylinder leakage.
6. Entering and inspection of tender tank interior.

Annual Inspection Requirements; § 230.16

1. Testing of thickness of arch and water bar tubes (arch brick to be removed)
2. Hydrostatic testing of boiler.
3. Testing of all staybolts.
4. Interior inspection of boiler.
5. Thickness verification of dry pipes.
6. Smoke box inspection.
7. Main reservoir hammer or UT testing and hydrostatic testing (for non-welded and drilled main reservoirs)
8. Removal and inspection of steam locomotive drawbar(s) and pins (NDE testing other than merely visual)
9. Inspection of longitudinal lap joint boiler seams.

5 Year Inspection Requirements; § 230.16

1. Inspection of flexible staybolt caps and sleeves.

1472 Service Day Inspection Requirements; § 230.17

1. Removal of boiler flues (as necessary) and cleaning of boiler interior.
2. Removal of jacket and lagging and inspection of boiler interior and exterior.
3. Hydrostatic testing of boiler.
4. Thickness verification (boiler survey) and recomputation and update of steam locomotive specification card, (FRA Form No. 4).

Appendix B to Part 230—Diagrams and Drawings

Reference 230.8
Drawing 1

BOILER: STAYED AND UNSTAYED SURFACES

Section Through Locomotive Boiler

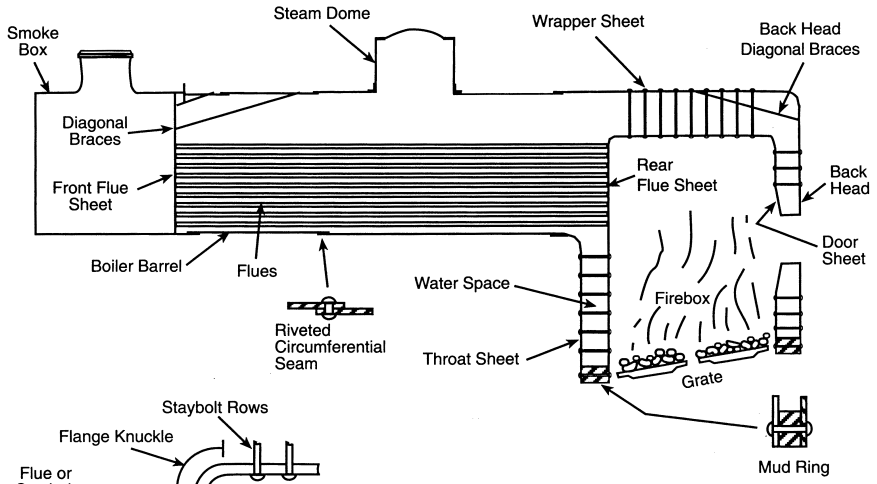

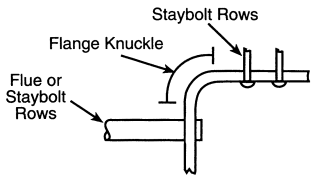

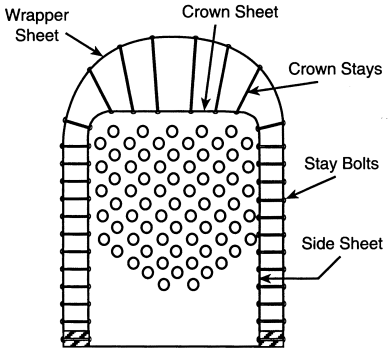

SECTION THROUGH FIREBOX

BOILER STAYED SURFACES

- Front Flue Sheet
- Rear Flue Sheet
- Wrapper Sheet
- Door Sheet
- Side Sheets
- Crown Sheet
- Throat Sheet
- Back Head
- Stayed Section of Thermic Syphons

BOILER UNSTAYED SURFACES

- Boiler Barrel
- Steam Dome
- Arch Tubes
- Thermic Syphon Neck
- Firebox Circulators
- Knuckle Section of Flanged Sheet

Reference 230.27
Drawing 2

RIVET IN SINGLE SHEAR

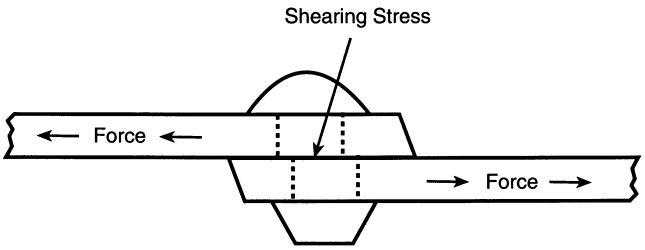

Reference 230.27
Drawing 3

RIVET IN DOUBLE SHEAR

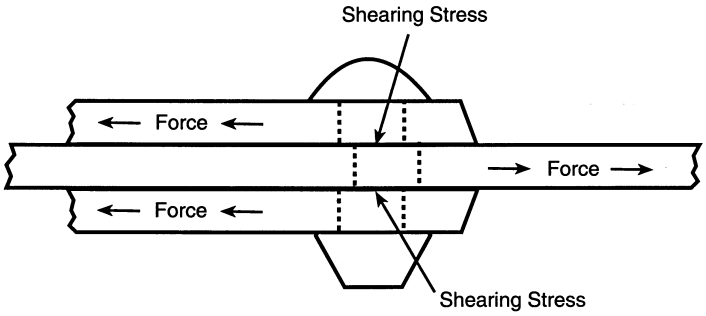

Reference 230.34(b)
Drawing 4

RIVETED BUTT SEAM

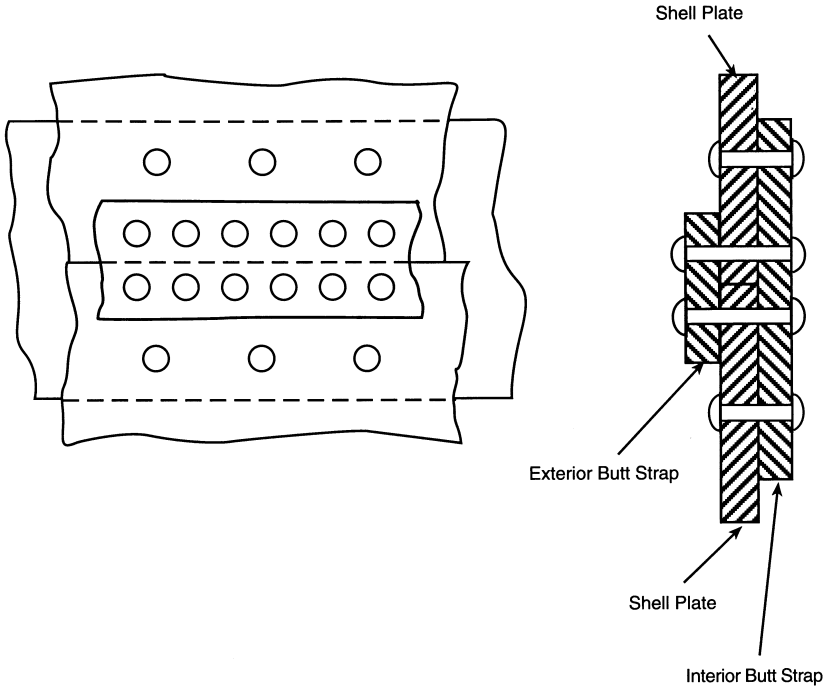

Reference 230.34(a)
Drawing 5

RIVETED BOILER PATCH

Diagonal Riveted Patch

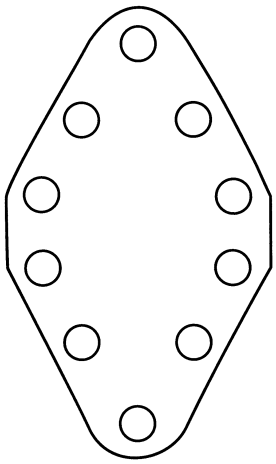

Circular Riveted Patch

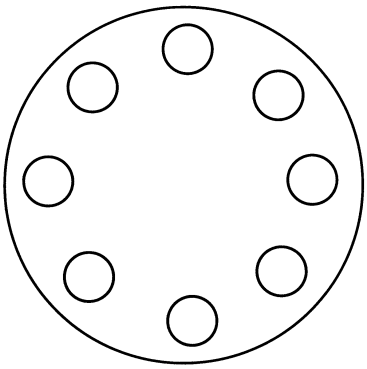

Typical Riveted Patch Installation

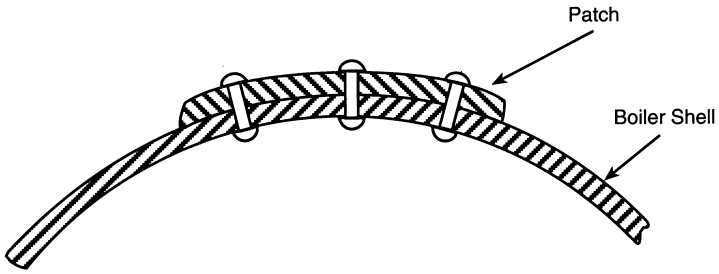

Patch may be installed on Boiler Shell Interior or Exterior

Reference 230.30
Drawing 6

RIVETED LAP SEAM

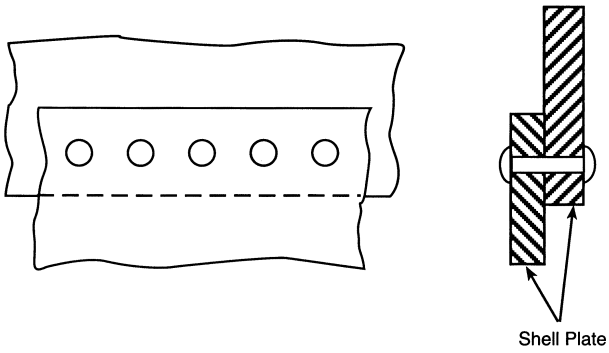

Reference 230.30
Drawing 7

RIVETED LAP SEAM WITH REINFORCING PLATE

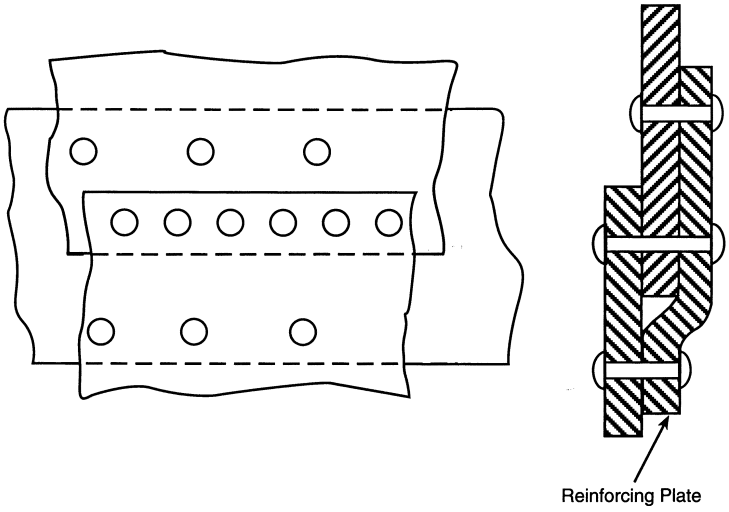

Reference 230.33(c)
Drawing 8

WELD BUILDUP REPAIR OF WASTED UNSTAYED BOILER SHEET

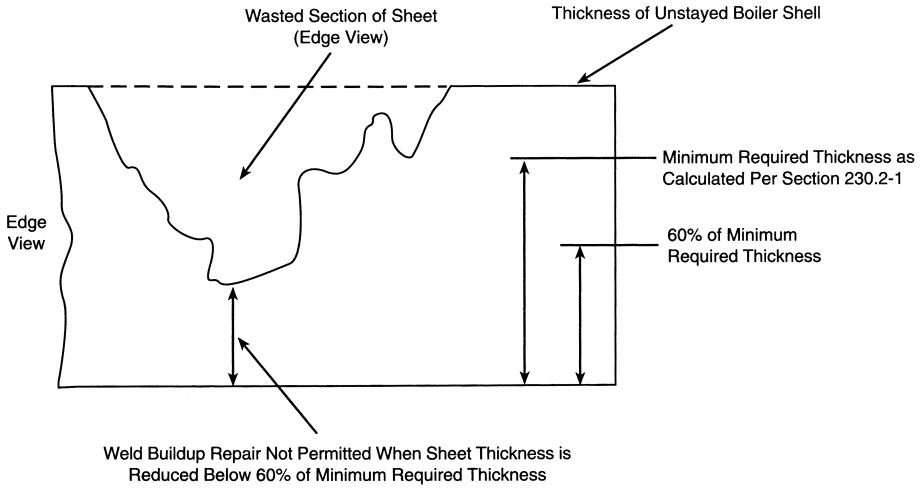

Reference 230.33(d)
Drawing 9

FLUSH PATCHES ON UNSTAYED SECTION OF BOILER SHELL

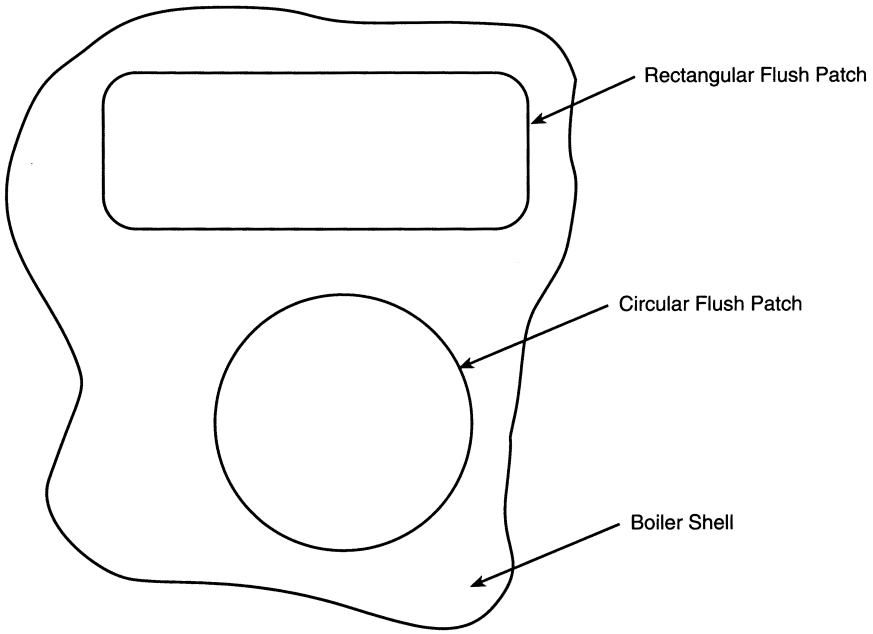

Typical Flush Patch Installation

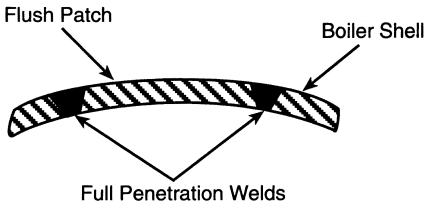

Reference 230.38(b)
Drawing 10

ARRANGEMENT OF TELLTALE HOLE IN REDUCED-BODY STAYBOLT

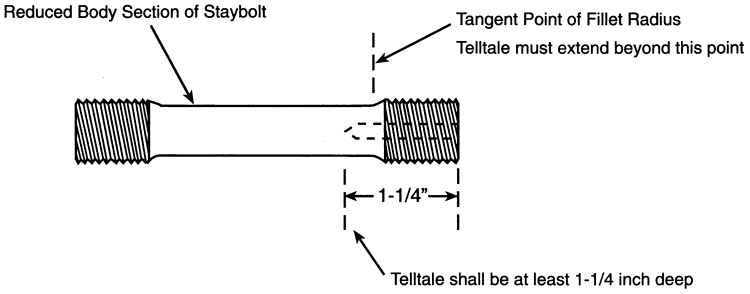

Reference 230.41(b)
Drawing 11

ARRANGEMENT OF TELLTALE HOLE IN HOLLOW FLEXIBLE STAYBOLT

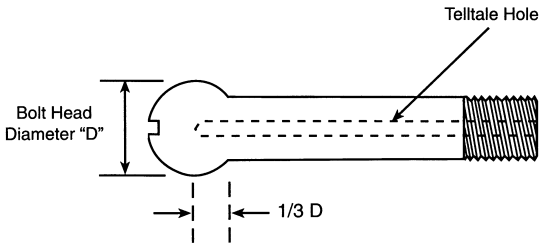

Minimum Telltale Hole Depth into Bolt Head
To Equal 1/3 of Bolt Head Diameter (1/3 D)

Reference 230.51
Drawing 12

GENERAL ARRANGEMENT OF WATER GLASS AND WATER COLUMN VALVES (Typical)

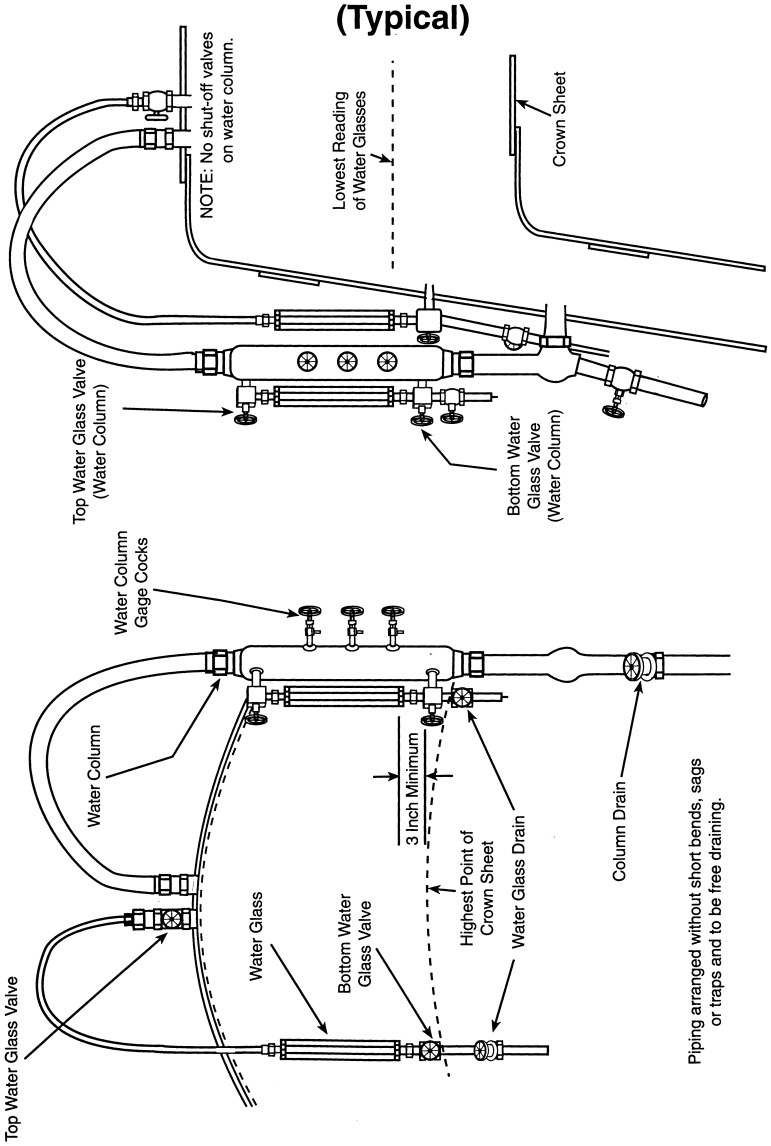

Reference 230.58(b)
Drawing 13

INSTALLATION OF FLUE PLUG

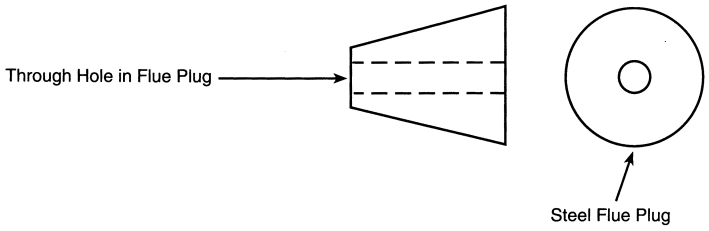

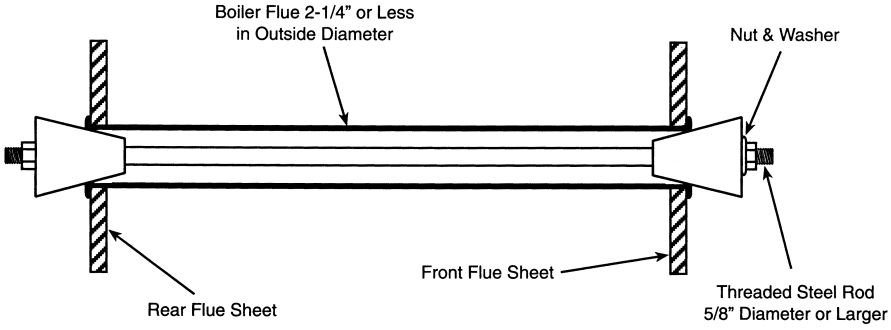

Reference 230.62
Drawing 14

DRY PIPE

Arrangement of Dry Pipe Subject to Pressure

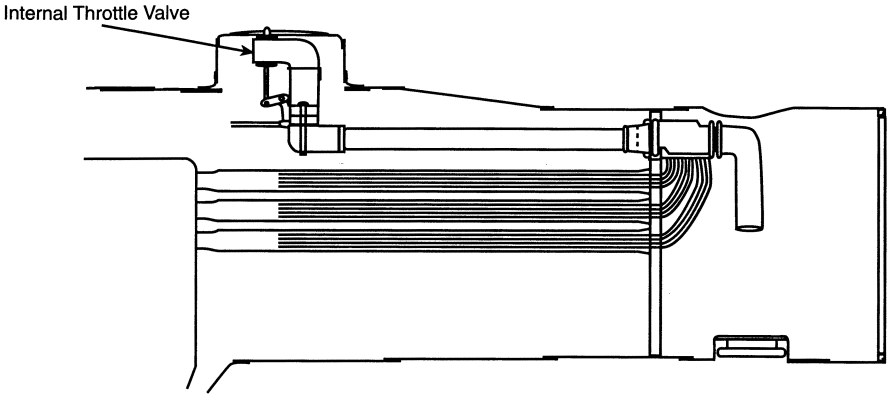

Reference 230.62
Drawing 15

Arrangement of Dry Pipe Not Subject to Pressure

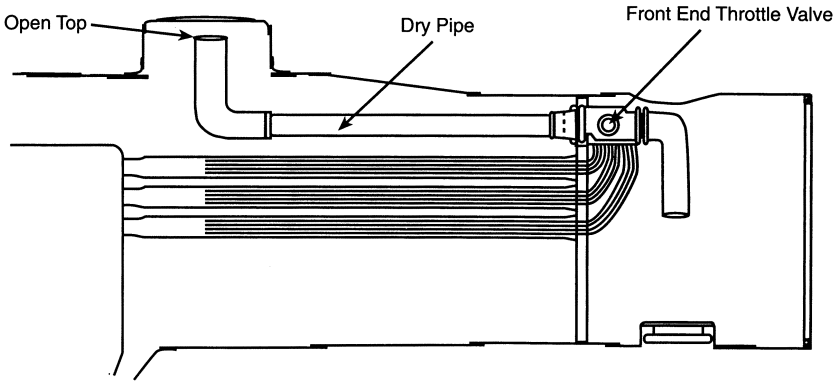

Reference 230.71(b)
Drawing 16

ORIFICE

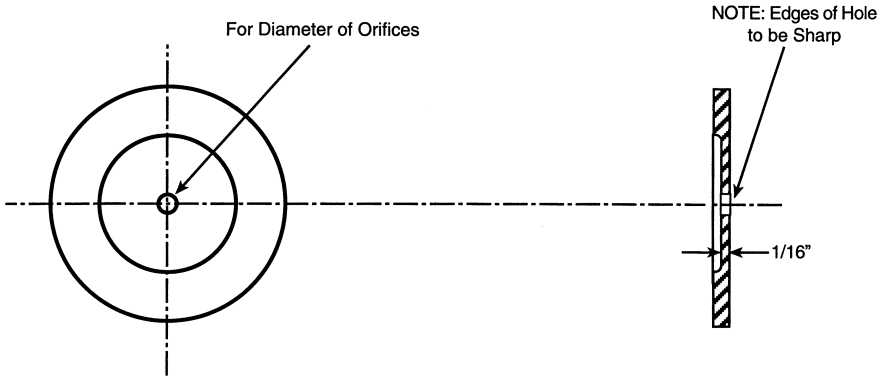

Reference 230.113
Drawing 17

WHEEL DEFECT GAUGE

This gauge to be used in determining flat spots, worn flanges, and broken rims.

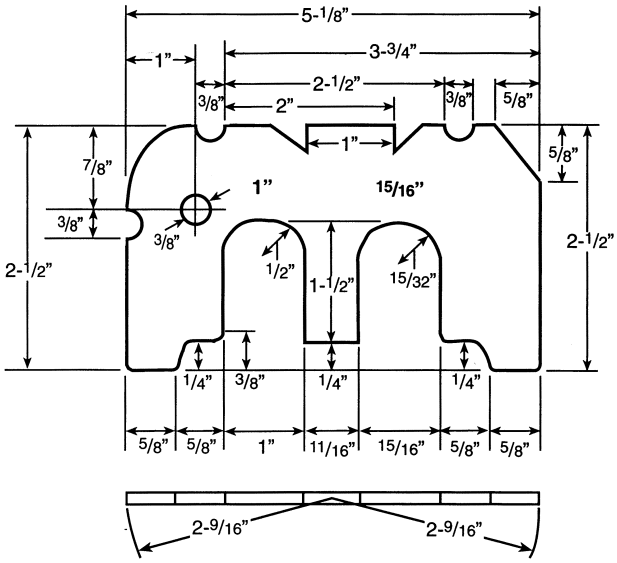

Reference 230.113
Drawing 18

WHEEL DEFECT GAUGE

Method of gauging worn Flanges.

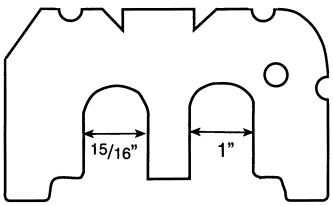

Reference 230.113
Drawing 19

WHEEL DEFECT GAUGE

Method of gauging worn flanges.

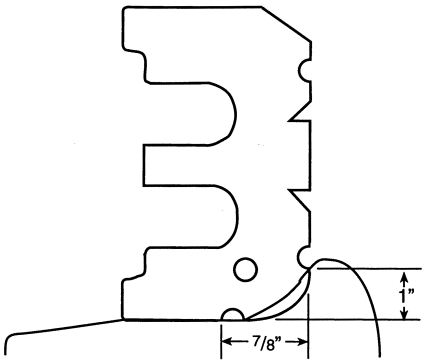

Reference 230.113
Drawing 20

Method of gauging shelled and flat spots.

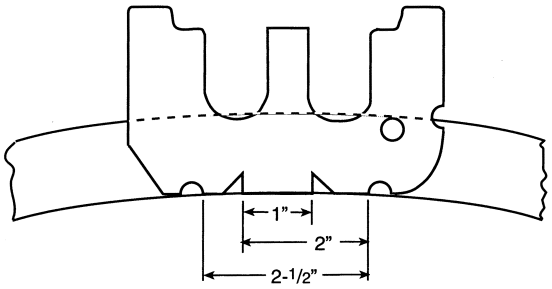

Reference 230.113
Drawing 21

Method of gauging broken rims.

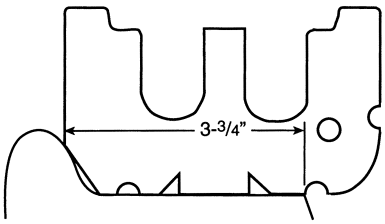

Reference 230.112
Drawing 22

STEEL TIRE

Retaining ring type fastening. Driving and trailing wheels.

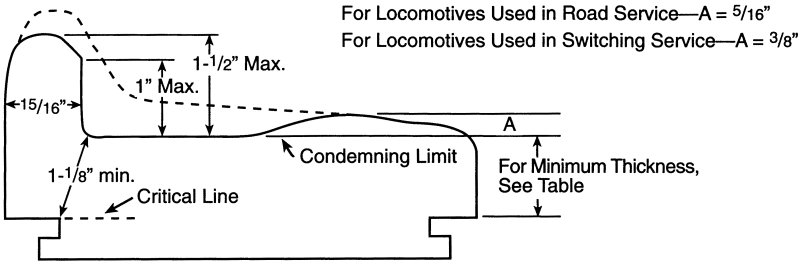

Reference 230.112
Drawing 23

Shrinkage fastening with shoulder and retaining segments. Driving and trailing wheels.

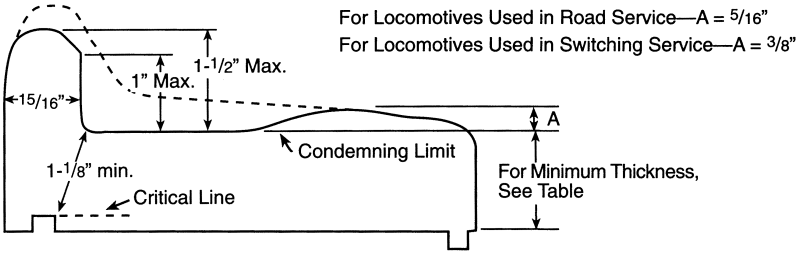

Reference 230.112
Drawing 24

Shrinkage fastening. Driving and trailing wheels.

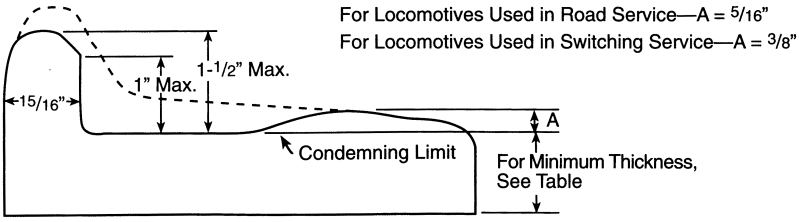

Reference 230.112
Drawing 25

STEEL TIRE

Retaining ring type fastening. Minimum thickness for steel tires. Engine and tender.

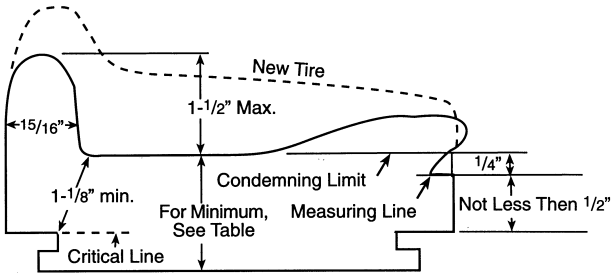

Reference 230.112
Drawing 26

Shrinkage fastening only. Minimum thickness for steel tires. Engine and tender.

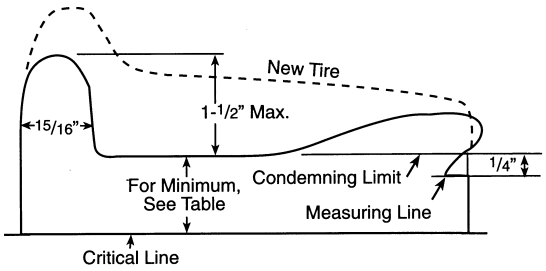

Reference 230.112
Drawing 27

Retaining ring fastening. Minimum thickness for steel tires. Engine and tender.

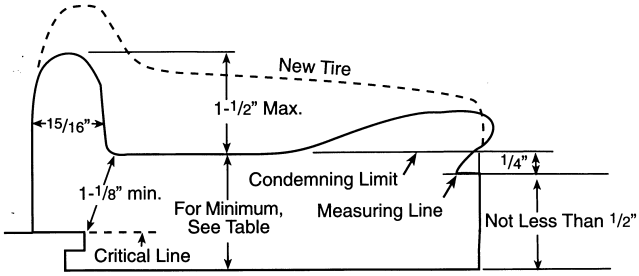

Reference 230.113(j)
Drawing 28

STEEL WHEELS

Minimum thickness of rim. Engine and tender truck wheels.

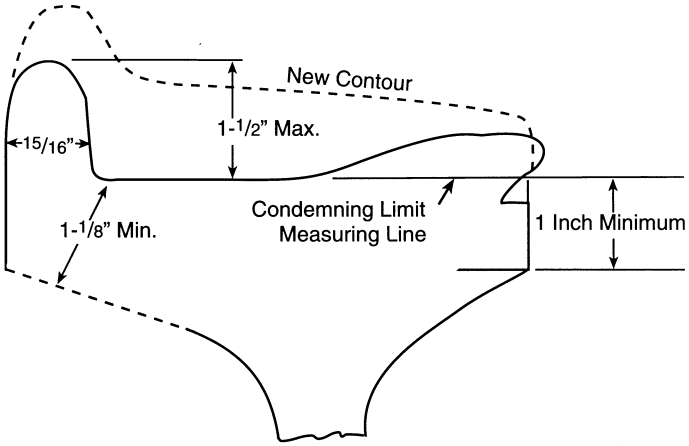

Reference 230.98
Drawing 29

SEAMS IN AXLES

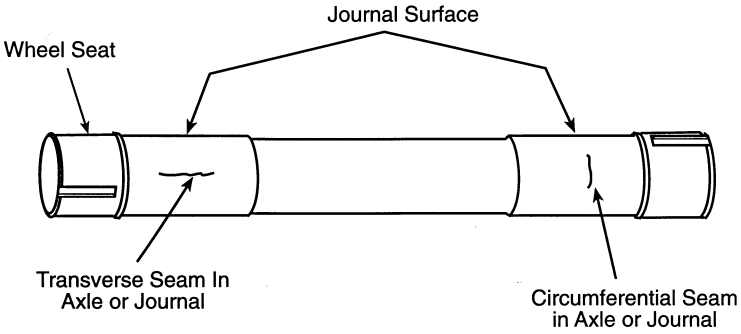

Reference 230.114(a)
Drawing 30

FILLING BLOCK FOR DIVIDED-RIM WHEEL CENTER

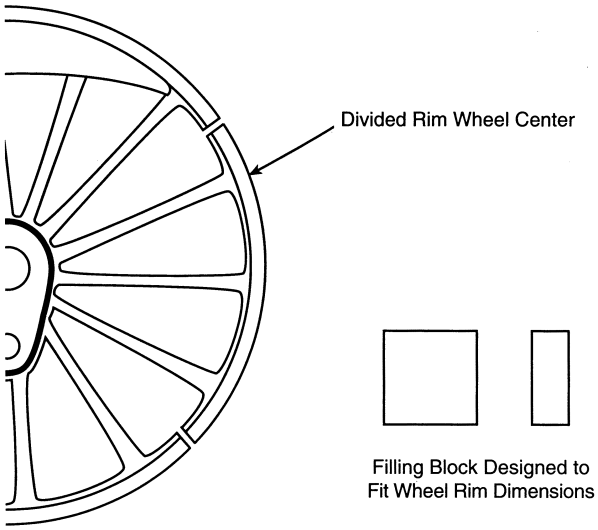

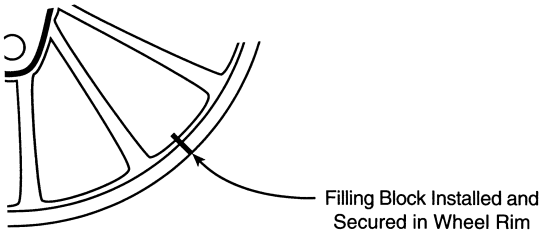

Reference 230.114(c)
Drawing 31

BANDED WHEEL HUB

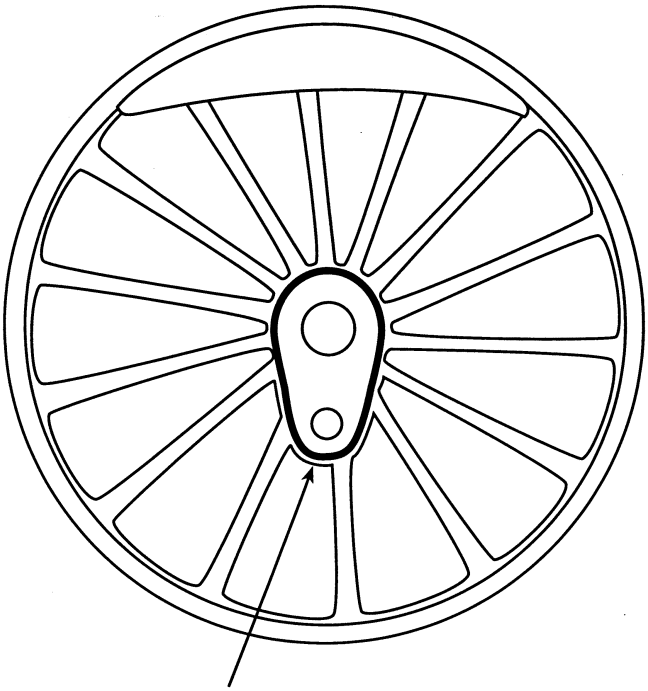

APPENDIX C TO PART 230—FRA INSPECTION FORMS

Appendix C - FRA Inspection Forms

Form No. 1 **31 and 92 Service Day Inspection Report**

Date of Inspection_____ Owner_____ Locomotive Initials_____

Operator_____ Locomotive No._____

31 and 92 Service Day Requirements

Instructions: Non-complying conditions shall be repaired and this report approved before the locomotive is returned to service. Where condition is called for, enter either: **(1) Good -** No defects which could be discovered by a reasonable inspection; **(2) Fair -** Functioning less than optimally but safe and suitable and not in violation of the regulations; or **(3) Poor -** Not in compliance with the regulations. In any case N/A means - not applicable.

Was boiler washed?_____

Were water gauge and valve passages cleaned?_____

Were gauge cock passages cleaned?_____

Were all washout plugs removed and inspected?_____

Were arch tubes, circulators, siphons and water bar tubes cleaned and inspected?_____

Were fusible plugs removed, cleaned & inspected?_____

Were staybolts hammer tested?_____

Were all broken staybolts replaced?_____

Were steam leaks repaired?_____

Condition of draft system and draw gear._____

Condition of running gear._____

Condition of driving gear._____

Condition of spring/equalizing system._____

Condition of tender running gear._____

Condition of brake equipment._____

Were injectors tested and in good condition?_____

Was feedwater pump tested and in good condition?_____

92 Service Day Requirements

Date of previous 92 Service Day Inspection_____

Safety relief valves pop at_____psi_____psi_____psi

Were all steam gauges tested?_____

Were all air brake gauges tested?_____

Were steam gauge siphon pipe(s) cleaned?_____

Were tubular water glasses renewed?_____

Were air compressor(s) orifice tested?_____

Was main reservoir tested for leakage?_____

Were brake cylinders tested for leakage?_____

Was tender tank entered and inspected?_____

If no 92 Service Day Inspection is done, enter number of service days used since last 92 Service Day Insp._____

_____ INSPECTOR

_____ INSPECTOR

The above work has been performed and the report is approved._____ OFFICER IN CHARGE

Form No. 2

Daily Locomotive Inspection Report

Date of Inspection_____ Owner_____ Locomotive Initials_____
Operator_____ Locomotive No._____

Instructions: Non-complying conditions shall be repaired and this report approved before locomotive is returned to service. This report shall be filed even if no non-complying conditions are reported, however it does not have to be approved before the locomotive is returned to service if no non-complying conditions are reported. Locomotive, including its tender and appurtenances, shall be inspected each day it is offered for use.

Repairs needed:	**Repairs done by:**

CONDITION OF WATER GLASSES:_____ _____

CONDITION OF GAUGE COCKS:_____
LP_____**psi**

CONDITION OF INJECTORS / PUMPS:_____

BOILER SAFETY VALVE LIFTS AT:_____**psi**

SEATS AT:_____**psi**

CONDITION OF PISTON ROD AND VALVE STEM PACKING_____

CONDITION OF AIR COMPRESSOR:_____

MAIN RESERVOIR PRESS.: HP_____**psi,**

BRAKE PIPE PRESSURE:_____ _____**psi**

LOCOMOTIVE BRAKE PIPE LEAKAGE:_____**lbs. per minute**

CONDITION OF BRAKES:_____

CONDITION OF SANDERS:_____

Where condition is called for enter:

Good - No defects which could be discovered by a reasonable inspection.
Fair - Functioning less than optimally but is in safe and suitable condition, and not in violation of the rules.
Poor - Not in compliance.
N/A - Not applicable.

Inspector's signature:_____ **Occupation:**_____

The above work has been performed, except as noted, and the report is **approved by:**_____

_____ **Occupation**
_____ **Date**

Approved

Note: Additional items may be added to this form if desired.

Form No. 3 **Annual Inspection Report**

Date of Inspection_____ Owner_____ Locomotive Initials_____

Operator_____ Locomotive No._____

Instructions: Non-complying conditions shall be repaired and this report approved before the locomotive is returned to service. Where condition is called for, enter either: **(1) Good** - No defects which could be discovered by a reasonable inspection; **(2) Fair** - Functioning less than optimally but safe and suitable and not in violation of the regulations; or **(3) Poor** - Not in compliance with the regulations. In any case N/A means - not applicable.

Boiler hydrostatically tested to _____psi, at a water temperature of _____degrees F.

Was boiler washed?_____

Were water gauge and valve passages cleaned?_____

Were gauge cock passages cleaned?_____

Were all washout plugs removed and inspected?_____

Were arch tubes, circulators, siphons and water bar tubes cleaned and inspected?_____

Thickness of arch tubes_____; Water bar tubes_____

Dry pipe thickness_____;Circulator thickness_____

Were water column passages cleaned and inspected?_____

Was boiler entered and inspected?_____

Were drilled flexible staybolt telltale holes tested?_____

Were staybolts hammer tested?_____

Were all broken staybolts replaced?_____

Were longitudinal lap seams inspected?_____

Was smoke box entered and inspected?_____

Safety relief valves pop at_____psi_____psi_____psi

Were injectors tested and in good condition?_____

Was feedwater pump tested and in good condition?_____

Were all steam gauges tested?_____

Were steam gauge siphon pipe(s) cleaned?_____

Were steam leaks repaired?_____

Were tubular water glasses renewed?_____

Were fusible plugs removed, cleaned & inspected?_____

Flexi caps removed on (date)_____

Were all air brake gauges tested?_____

Main reservoir hydro_____psi, hammer_____ NDE_____, Drilled_____

Were brake cylinders tested for leakage._____

Was main reservoir tested for leakage._____

Were air compressor(s) orifice tested?_____

Condition of driving gear._____

Condition of running gear._____

Condition of draft system and draw gear._____

Condition of spring/equalizing system._____

Condition of brake equipment._____

Condition of tender running gear._____

Was tender tank entered and inspected?_____

_____
INSPECTOR

_____
INSPECTOR

The above work has been performed and the report is approved._____
OFFICER IN CHARGE

Locomotive Air Brake Cleaning, Testing and Inspection Record

EQUIPMENT	SERVICE PERIOD	Previous Inspection	Current Annual Date	Inspection Date	Inspection Date	Inspection Date	Inspection Date	Notes
AIR COMPRESSOR ORIFICE TEST	92 service day							
AIR GAUGES	92 service day							
MAIN RESERVOIR LEAKAGE	92 service day							
BRAKE CYLINDER LEAKAGE	92 service day							
FILTERS	Annual Inspection							
DIRT COLLECTORS	Annual Inspection							
MAIN RESERVOIR HYDRO, HAMMER, NDE	Annual Inspection							
BRAKE VALVES	368 service days or second							

FRA Form 4

BOILER SPECIFICATION CARD

Locomotive No._____; **Boiler No.**_____; **Date built**_____
Boiler built by:_____
Owned by:_____
Operated by:_____
Type of boiler:_____; **Dome, where located:**_____

BOILER SURVEY DATA

Where **condition** is called for, use: **New** - New material at the time of the boiler survey; **Good** - Little or no wear and/or corrosion; **Fair** - Obvious wear and/or corrosion.

Boiler Shell Sheets

Material:	Type of Material (wrought iron, carbon steel, or alloy steel)	Carbon Content	Condition
1st course (front)	_____	_____	_____
2nd course	_____	_____	_____
3rd course	_____	_____	_____
Rivets	_____	n/a	n/a

Documentation of how material was determined shall be attached to this form.

Measurements:		At Seam	Thinnest		
Front flue sheet,	thickness	n/a	_____		
1st course,	thickness	_____,	_____,	ID_____	,ID_____
2nd course,	thickness	_____,	_____,	ID_____	,ID_____
3rd course,	thickness	_____,	_____,	ID_____	,ID_____

When courses are not cylindrical give ID at each end

Is boiler shell circular at all points?_____
If shell is flattened, state location and amount_____
Are all flattened areas of shell stayed adequately for the pressure allowed by this form?_____

Water Space at Mud Ring: Sides_____, Front_____, Back_____
Width of water space at sides of fire box measured at center line of boiler: Front_____, Back_____

Firebox and Wrapper Sheets

Firebox sheets:	Thickness	Material	Condition
Rear flue sheet	_____	_____	_____
Crown	_____	_____	_____
Sides	_____	_____	_____
Door	_____	_____	_____
Combustion chamber	_____	_____	_____
Inside throat	_____	_____	_____
Wrapper sheets:			
Throat	_____	_____	_____
Back head	_____	_____	_____
Roof	_____	_____	_____
Sides	_____	_____	_____

Steam Dome

Dome is made of _____pieces (not including seam welts, if any), Top opening diameter_____
Middle cylindrical portion - ID_____ , Opening in boiler shell, longitudinally - _____

Dome sheets:	Thickness	Material	Condition
Base	_____	_____	_____
Middle cylindrical portion	_____	_____	_____
Top	_____	_____	_____
Lid	_____	_____	_____
Boiler shell liner for steam dome opening:	_____	_____	_____

Is liner part of longitudinal seam?_____

Arch Tubes, Flues, Circulators, Thermic Siphons, Water Bar Tubes, Superheaters, and Dry Pipe

Arch tubes: OD_____, wall thickness_____; number _____; condition_____

Flues:
OD_____, wall thickness_____, length_____; number_____; condition_____
OD_____, wall thickness_____, length_____; number_____; condition_____
OD_____, wall thickness_____, length_____; number_____; condition_____

Circulators: OD_____, wall thickness_____; number _____; condition_____

Thermic siphons: number_____; plate thickness_____; condition_____
neck OD_____, neck thickness_____; condition_____

Water bar tubes: OD_____, wall thickness_____

Superheater units directly connected to boiler with no intervening valve:
Type_____, Tube OD_____, wall thickness_____; number_____; condition_____

Dry pipe subject to pressure:
OD_____, wall thickness_____, material_____; condition_____

Stay Bolts, Crown Bar Rivets, and Braces

Stay bolts:
Smallest crown stay diameter_____, avg. spacing_____X_____; condition_____
Smallest stay bolt diameter_____, avg. spacing_____X_____ ; condition_____
Smallest combustion chamber stay bolt dia._____,
avg. spacing_____X_____; condition_____

Measurement at smallest diameter

Crown bar bolts & rivets:
Roof sheet rivets, smallest dia._____, ave. spacing_____X_____; condition_____
Roof sheet bolts, smallest dia._____, ave. spacing_____X_____; condition_____
Crown sheet rivets, smallest dia._____, ave. spacing_____X_____; condition_____
Crown sheet bolts, smallest dia._____, ave. spacing_____X_____;condition_____

Braces:

	Number	Total Area Stayed	Total Cross Sectional Area of Braces Actual	Equivalent Direct Stay
Backhead	_____	_____	_____	_____
Throat sheet	_____	_____	_____	_____
Front tube sheet	_____	_____	_____	_____
_____	_____	_____	_____	_____
_____	_____	_____	_____	_____

Safety Valves, Heating Surface, and Grate Area

Safety valves: Total number of safety valves on locomotive_____

Valve Size	Manufacturer	No. valves of this size and manufacture
_____	_____	_____
_____	_____	_____
_____	_____	_____
_____	_____	_____

Heating Surface:
Heating surface, as part of a circulating system in contact on one side with water or wet steam being heated and on the other side with gas or refractory being cooled, shall be measured on the side receiving heat.

Firebox and Combustion Chamber	_____	square feet
Flue Sheets (less flue ID areas)	_____	square feet
Flues	_____	square feet
Circulators	_____	square feet
Arch Tubes	_____	square feet
Thermic Siphons	_____	square feet
Water Bar Tubes	_____	square feet
Superheaters (front end throttle only)	_____	square feet
Other	_____	square feet
Total Heating Surface	_____	square feet

Grate area:_____square feet

Water Level Indicators, Fusible Plugs, and Low Water Alarms

Height of lowest reading of gauge glasses above crown sheet:_____ _____

Height of lowest reading of gauge cocks above crown sheet:_____

Is boiler equipped with fusible plug(s)? _____, number_____

Is boiler equipped with low water alarm(s)? _____, number_____

Calculations

Staybolt stresses:

Stay bolt under greatest load, maximum stress _____psi
Location_____

Crown stay, crown bar rivet, or crown bar bolt under greatest load, max. stress _____psi
Location_____

Combustion chamber stay bolt under greatest load, maximum stress _____psi
Location_____

Braces:

Round or rectangular brace under greatest load, maximum stress _____psi
Location_____

Gusset brace under greatest load, maximum stress _____psi
Location_____

Shearing stress on rivets:

Greatest shear stress on rivets in longitudinal seam _____psi
Location (course #)_____ ; Seam Efficiency_____

Boiler shell plate tension:

Greatest tension on net section of plate in longitudinal seam _____psi
Location (course #)_____ ; Seam Efficiency_____

Boiler plate and components, minimum thickness required @ tensile strength:

Front tube sheet	_____@_____	Rear flue sheet	_____@_____
1st course at seam	_____@_____	1st course not at seam	_____@_____
2nd course at seam	_____@_____	2nd course not at seam	_____@_____
3rd course at seam	_____@_____	3rd course not at seam	_____@_____
Roof sheet	_____@_____	Crown sheet	_____@_____
Side wrapper sheets	_____@_____	Firebox side sheets	_____@_____
Back head	_____@_____	Door sheet	_____@_____
Throat sheet	_____@_____	Inside throat sheet	_____@_____
Combustion chamber	_____@_____	Dome, top	_____@_____
Dome, middle	_____@_____	Dome, base	_____@_____
Arch tubes	_____@_____	Dome, lid	_____@_____
Water bar tubes	_____@_____	Thermic siphons	_____@_____
Dry pipe	_____@_____	Circulators	_____@_____

Notes. 1. **If tensile strength used is greater than 50,000 psi for steel or greater than 45,000 psi for wrought iron, supporting documentation must be furnished.**

2. **Any shell dimension less than 1/4" in thickness may not be adequate for support of or by other structures, particularly where threads or staybolts are concerned. Applicable codes should be consulted.**

Boiler Steam Generating Capacity: _____pounds per hour

The following may be used as a guide for estimating steaming capacity:

Pounds of Steam Per Hour Per Square Foot of Heating Surface:

Hand fired	8 lbs. per hr.
Stoker fired	10 lbs. per hr.
Oil, gas or pulverized fuel fired	14 lbs. per hr.

Record of Alterations

Description of Alteration	Date of Alteration

Record of Waivers

Waiver No.	Section No. Affected	Scope and Content of Waiver

Calculations done by:_____; Verified by:_____

Data used to verify the foregoing specifications is current and accurate. Based upon the information contained in this document and all necessary calculations, this boiler of Locomotive (Initial & number)_____ is safe for a working pressure of _____psi.

_____ Date_____; _____ Date_____

Locomotive Owner **Locomotive Operator**

Make working sketch here or attach drawing of longitudinal and circumferential seams used in shell of boiler, indicating on which courses used and give calculated efficiency of weakest longitudinal seam.

Form No. 5 **Locomotive Service Day Record**

Locomotive Initial and No._____ **owned by** _____ and **operated by**_____was placed in service following a 1472 Service Day Inspection on (start date)_____.
This locomotive shall not be operated after (date)_____, or it shall not be operated after it has accumulated 1472 service days from the above start date, whichever comes first, at which time it shall be due for a 1472 Service Day Inspection.

	Year															
Serv. days since last insp.																
Annual Date																
Serv. days since last insp.																
31 Service Day Date																
Serv. days since last insp.																
31 Service Day Date																
Serv. days since last insp.																
92 Service Day Date																
Serv. days since last insp.																
31 Service Day Date																
Serv. days since last insp.																
31 Service Day Date																
Serv. days since last insp.																
92 Service Day Date																
Serv. days since last insp.																
31 Service Day Date																
Serv. days since last insp.																
31 Service Day Date																
Serv. days since last insp.																
92 Service Day Date																
Serv. days since last insp.																
31 Service Day Date																
Serv. days since last insp.																
31 Service Day Date																
Serv. days since last insp.																
Annual Date																
TOTAL																

A copy of this record shall be filed with the Regional Administrator after 31 December and prior to 31 January of each year.

Signed_____**Officerin Charge**

FRA Form 19

Report of
ALTERATION ☐
or
Welded or Riveted REPAIR ☐

Locomotive Initials_____ **Locomotive No.**_____; **Boiler No.**_____;

Owned by _____

Operated by _____

Date work completed_____

Description of work:_____

Stress Calculations:

Remarks:_____

Attach drawings used in the repair or alteration or make drawings on back of this form.

Work done by:_____;

Certified by:_____

[64 FR 62865, Nov. 17, 1999, as amended at 70 FR 41996, July 21, 2005]

Appendix D to Part 230—Civil Penalty Schedule

Section	Violation	Willful violation
Subpart A—General		
230.11 Repair of non-complying conditions:		
(a) Failure to repair non-complying steam locomotive prior to use in service	$1,000	$2,500
(b) Failure of owner and/or operator to approve repairs made prior to use of steam locomotive	1,000	1,500
230.12 Movement of non-complying steam locomotive:	(1)	(1)
230.13 Daily inspection:		
(a) (b):		
(1) Inspection overdue	1,500	3,000
(2) Inspection not performed by qualified person	1,000	1,500
(c) Inspection report not made, improperly executed or not retained	1,000	1,500
230.14 Thirty-one service day inspection:		
(a):		
(1) Inspection overdue	1,500	3,000
(2) Inspection not performed by qualified person.		
(b) Failure to notify FRA	1,000	1,500
(c) Inspection report not made, improperly executed, not properly filed	1,000	1,500
230.15 Ninety-two service day inspection:		
(a):		
(1) Inspection overdue	1,500	3,000
(2) Inspection not performed by qualified person	1,000	1,500
(b) Inspection report not made, improperly executed, not properly filed	1,000	1,500
230.16 Annual inspection:		
(a):		
(1) Inspection overdue	1,500	3,000
(2) Inspection not performed by qualified person	1,000	1,500
(b) Failure to notify FRA	1,000	1,500
(c) Inspection report not made, improperly executed, not properly filed	1,000	1,500
230.17 One thousand four hundred seventy-two service day inspection:		
(a):		
(1) Inspection overdue	1,500	3,000
(2) Inspection not performed by qualified person	1,250	2,000
(b) Inspection report not made, improperly executed, not properly maintained, not properly filed	1,000	1,500
230.18 Service days:		
(a) Service day record not available for inspection	1,000	1,500
(b) Failure to file service day report with FRA Regional Administrator	1,000	1,500
(c) Failure to complete all 1,472 service day inspection items prior to returning retired steam locomotive to service	1,500	3,000
230.19 Posting of forms:		
(a) FRA Form No. 1:		
(1) FRA Form No. 1 not properly filled out	1,000	1,500
(2) FRA Form No. 1 not properly displayed	1,000	1,500
(b) FRA Form No. 3:		
(1) FRA Form No. 3 not properly filled out	1,000	1,500
(2) FRA Form No. 3 not properly displayed	1,000	1,500
230.20 Alteration and repair reports:		
(a) Alterations:		
(1) Failure to properly file FRA Form No. 19 with FRA Regional Administrator	1,000	1,500
(2) FRA Form No. 19 not properly filled out	1,000	1,500
(3) FRA Form No. 19 not properly maintained	1,000	1,500
(b) Repairs to unstayed portions of the boiler:		
(1) FRA Form No. 19 not properly filled out	1,000	1,500
(2) FRA Form No. 19 not properly maintained	1,000	1,500
(c) Repairs to stayed portions of the boiler:		
(1) FRA Form No. 19 not properly filled out	1,000	1,500
(2) FRA Form No. 19 not properly maintained	1,000	1,500
230.21 Failure to properly document steam locomotive number Change	1,000	1,500
Subpart B—Boilers and Appurtenances		
230.22 Failure to properly report accident resulting from failure of steam locomotive boiler or part or appurtenance thereof	1,500	2,500
230.23 Responsibility for general construction and safe working pressure:		
(a) Failure to properly establish safe working pressure for steam locomotive boiler	5,000	10,000
(b) Placing steam locomotive in service before safe working pressure for boiler has been established	5,000	10,000
230.24 Maximum allowable stress values on boiler components:		
(a) Use of materials not of sufficient tensile strength	1,000	2,000
(b) Use of a safety factor value of less than 4 when using the code of original construction in boiler calculations	2,000	4,000
230.25 Maximum allowable stresses on stays and braces:		

Section	Violation	Willful violation
(a) Exceeding allowable stress values on fire box and/or combustion chamber	1,000	2,000
(b) Exceeding allowable stress values on round, rectangular or gusset braces	1,000	2,000
230.29 Inspection and repair:		
(a):		
(1) Failure of owner and/or operator to inspect and repair any steam locomotive boiler and/or appurtenance under control thereof	1,500	3,000
(2) Failure to remove steam locomotive from service when considered necessary to do so	2,500	5,000
(b):		
(1) Failure of perform repairs in accordance with accepted industry standards	2,000	4,000
(2) Owner and/or operator returning steam locomotive boiler and/or appurtenances to service before they are in good condition and safe and suitable for service	2,000	4,000
230.30 Lap-joint seam boilers, Failure to properly inspect	2,000	4,000
230.31 Flues to be removed:		
(a):		
(1) Failure to remove all flues when inspecting boiler	1,500	3,000
(2) Failure to enter boiler and clean and inspect	1,500	3,000
(b) Failure to remove superheater flues when deemed necessary to do so	1,000	2,000
230.32 Time and method of inspection:		
(a) Failure to perform 1,472 service day inspection when required to do so	1,500	3,000
(b) Failure to properly inspect boiler during 1,472 service day inspection	1,500	3,000
230.33 Welded repairs and alterations:		
(a) Failure to obtain permission before welding on unstayed portions of boiler containing alloy or carbon steel with carbon content over .25 percent carbon	1,500	3,000
(b) Failure to perform welding on unstayed portions of boiler containing carbon steel not exceeding .25 percent carbon in accordance with a nationally accepted standard for boiler repairs	1,500	3,000
(c):		
(1) Failure to submit written request for approval before performing weld buildup on wasted areas of unstayed boiler surfaces that exceed 100 square inches or the smaller of 25 percent of minimum required wall thickness or ½ inch	1,500	3,000
(2) Repairing wasted sheets	1,500	3,000
230.34 Riveted repairs and alterations:		
(a) Failure to obtain approval before making riveted alterations on unstayed portions of the boiler; failure to do riveting in accordance with established railroad practices or accepted national standards for boiler repairs	1,500	3,000
(b) Failure to perform riveted repairs on unstayed boiler portions in accordance with established railroad practices or accepted national standards for boiler repairs	1,500	3,000
(c) Failure to perform riveted repairs on stayed boiler portions in accordance with established railroad practices or accepted national standards for boiler repairs	1,000	2,000
230.35 Failure to raise temperature of steam locomotive boiler to 70 degrees F. before applying hydrostatic pressure to the boiler	1,000	2,000
230.36 Hydrostatic testing of boilers:		
(a) Failure to perform hydrostatic test of boiler as required	1,500	3,000
(b) Failure to properly perform hydrostatic test	1,500	3,000
(c) Failure to properly inspect boiler after conducting hydrostatic test above MAWP	1,500	3,000
230.37 Failure to perform proper steam test or inspection of boiler after completion of repair or alteration to boiler	1,000	2,000
230.38 Telltale holes:		
(a) Failure to have telltale holes as required in staybolts	1,000	2,000
(b) Failure to have proper telltale holes in reduced body staybolts	1,000	2,000
(c) Failure to keep telltales holes when so required	1,000	2,000
230.39 Broken staybolts:		
(a) Boiler in service with excess number of broken staybolts	1,500	3,000
(b) Failure to replace staybolts when required to do so; to properly replace staybolts when so required; to inspect adjacent staybolts when replacing broken staybolts	1,500	3,000
(c) Failure to count leaking, plugged, or missing telltale holes as broken staybolts	1,500	3,000
(d) Closing telltale holes by prohibited means	1,500	3,000
230.40 Time and method of staybolt testing:		
(a) Failure to hammer test staybolts when so required	1,000	2,000
(b) Failure to properly hammer test staybolts	1,000	2,000
230.41 Flexible staybolts with caps:		
(a) Failure to inspect flexible staybolts as required	1,000	2,000
(b) Failure to replace broken flexible staybolts; failure to close inner ends of telltale holes as required	1,000	2,000
(c) Failure to report removal of flexible staybolts caps and other tests on FRA Form No. 3 when so required	1,000	2,000
(d) Failure to remove staybolt caps or otherwise test when FRA inspector or steam locomotive owner and/or operator consider it necessary to do so	1,000	2,000
230.42 Failure to have accurate boiler steam gauge where engine crew can conveniently read	2,000	4,000
230.43 Failure to have gauge siphon of proper capacity on steam gauge supply pipe; failure to properly clean, maintain the steam gauge supply pipe	1,000	2,000

Section	Violation	Willful violation
230.44 Failure to test steam gauge when so required	1,000	2,000
230.45 Failure to properly test and/or set steam gauge	1,000	2,000
230.46 Failure to attach to boiler backhead metal badge plate showing allowable steam pressure	1,000	1,500
230.47 Boiler Number:		
(a) (b) (c) Failure to stamp builder's number on boiler when number is known	1,000	1,500
230.48 Number and capacity of safety relief valves:		
(a) Failure to equip steam locomotive boiler with proper safety relief valves	2,500	5,000
(b) Failure to provide additional safety relief valve capacity when so required	3,000	6,000
230.49 Setting of safety relief valves:		
(a) Safety relief valve(s) set and/or adjusted by person not competent to do so	2,500	5,000
(b) Safety relief valve(s) not set to open at prescribed pressure(s)	2,500	5,000
(c) Safety relief valve(s) not properly set	3,000	6,000
(d) Set pressure of lowest safety relief valve not properly indicated	1,000	2,000
230.50 Failure to test and adjust safety relief valves when required to do so	1,500	3,000
230.51 Failure to equip steam locomotive boiler with at least 2 properly installed water glasses	1,000	2,000
230.52 Failure to properly equip water glasses	2,000	4,000
230.53 Failure to properly clean water glass valves and/or gauge cocks when required to do so	1,000	2,000
230.54 Testing and maintenance:		
(a) Failure to properly test water glasses and/or gauge cocks	1,000	2,000
(b) Failure to properly maintain gauge cocks, water column drain valves, and/or water glass valves	1,500	3,000
230.55 Tubular type water and lubricator glasses and shields:		
(a) Failure to renew tubular type water glasses as required	1,000	2,000
(b) Failure to properly shield tubular water glasses and/or lubricator glasses	1,000	2,000
(c) Failure to properly locate and/or maintain water glasses and/or water glass shields	1,000	2,000
230.56 Failure to equip water glass with suitable lamp	1,000	2,000
230.57 Injectors and feedwater pumps:		
(a) Failure to equip steam locomotive with proper means for delivering water to the boiler	3,000	6,000
(b) Failure to properly test and/or maintain injectors, feedwater pumps, boiler checks, delivery pipes, feed water pipes, tank hose, tank valves	2,500	5,000
(c) Failure to properly brace injectors, feedwater pumps, and/or associated piping	1,000	2,000
230.58 Flue plugs:		
(a) Plugging flue plugs when not otherwise permitted	1,000	2,000
(b) Improperly plugging flue plugs, when otherwise permitted	1,000	2,000
230.59 Failure to remove and properly clean fusible boiler plugs when required to do so; failure to properly note removal	1,500	3,000
230.60 Time of washing:		
(a) Failure to thoroughly wash boiler when required to do so	1,000	2,000
(b) Failure to remove washout plugs, arch tube plugs, thermic siphon plugs, circulator plugs, water bar plugs when washing locomotive boiler	1,500	3,000
(c) Failure to examine and/or properly maintain washout plugs washout plug sleeves, threaded openings	1,500	3,000
(d) Failure to clean fusible plugs when required to do so	1,500	3,000
230.61 Arch tubes, water bar tubes, circulators and thermic siphons:		
(a) Failure to clean, wash, inspect arch tubes, water bar tubes, circulators and thermic siphons as required	1,000	2,000
(b) Failure to renew arch tubes, water bar tubes; failure to repair or renew circulators, thermic siphons when required	1,500	3,000
(c) Failure to properly inspect and/or replace as necessary arch tubes, water bar tubes, circulators	1,500	3,000
230.62 Failure to properly inspect and/or repair or replace as necessary dry pipes subject to pressure	2,500	5,000
230.63 Failure to properly inspect smoke box, steam pipes, pressure parts when required to do so	1,500	3,000
230.64 Failure to remove from service steam locomotive boiler leaking under lagging from condition which may reduce safety and/or repair the boiler before returning to service	1,500	3,000
230.65 Failure to keep steam locomotive boiler, piping, appurtenances in repair so steam does not obscure vision	1,000	2,000
230.66 Failure to properly oversee general design, construction, maintenance of steam locomotive(s) and tender(s)	1,000	2,000
230.67 Failure to ensure all steam locomotives and tenders are properly inspected and repaired and/or all defects are properly repaired and steam locomotive and/or tender are in good condition, safe and suitable for service before being returned to service	2,500	5,000
230.68 Failure to equip steam locomotive that operates in excess of 20 miles per hour over the general system with speed indicator maintained to ensure accurate functioning	1,000	1,500
230.69 Failure to equip steam locomotive with properly supported ash pan with operating mechanism that may be safely operated and securely closed	1,000	2,000
230.70 Safe condition:		
(a) Failure to perform proper pre-departure inspection when so required	1,000	2,000
(b) Failure to properly equip steam locomotive with brake pipe valve clearly identified as "Emergency Brake Valve"	1,000	2,000
230.71 Orifice testing of air compressors:.		
(a)(b):		
Failure to properly test and/or maintain air compressor(s) capacity	1,000	2,000

Section	Violation	Willful violation
230.72 Testing main reservoirs:		
(a) Failure to properly test main reservoir(s) when required	1,000	2,000
(b) Impermissibly or improperly drilling main reservoir	1,000	2,000
(c) Impermissibly using NDE method to measure wall thickness of main reservoir	1,000	2,000
(d) Failure to use appropriate method of NDE testing of wall thickness of welded or riveted longitudinal lap seam main reservoir(s); failure to withdraw main reservoir(s) from service when testing reveals insufficient wall thickness	1,500	3,000
230.73 Air gauges:		
(a) Failure to equip steam locomotive with properly located air gauge(s) that are no more than 3 psi in error	1,000	1,500
(b) Failure to test air gauge(s) when so required	1,000	1,500
(c) Failure to properly test air gauge(s)	1,000	1,500
230.74 Failure to properly clean and/or test all air brake valves, related dirt collectors, filters when required to do so	1,000	1,500
230.75 Failure to properly stencil or display date of testing and cleaning and initials of shop or station performing work	1,000	1,500
230.76 Piston travel:		
(a) Insufficient minimum piston travel	1,000	1,500
(b) Excessive piston travel when steam locomotive is stationary	1,000	2,000
230.77 Foundation brake gear:		
(a) Failure to properly maintain foundation brake gear	1,000	2,000
(b) Foundation brake gear less than 2.5 inches above rail	1,000	2,000
230.78 Leakage:		
(a):		
(1) Failure to test for leakage from main reservoir or related piping as required	1,000	1,500
(2) Failure to repair excessive leakage from main reservoir or related piping leakage	1,000	2,000
(b) Failure to test for brake cylinder as required	1,000	1,500
(c):		
(1) Failure to test for leakage from steam locomotive brake pipe as required	1,000	2,000
(2) Failure to repair excessive brake pipe leakage	1,000	2,000
230.79 Train signal system:		
(1) Failure to test the train signal system or other form of on-board communication as required	1,000	1,500
(2) Failure to repair train signal system or other on-board communication when not safe or suitable for service	1,000	1,500
230.80 Cabs:		
(a) Steam locomotive cab not safe and suitable for service	1,000	2,000
(b) Steam pipes: Construction, attachment	1,000	2,000
(c) Oil-burning steam locomotive, cab-enclosed	1,000	1,500
230.81 Cab aprons:		
(a) Cab apron, general provisions	1,000	1,500
(b) Cab apron, insufficient width	1,000	1,500
230.82 Fire doors:		
(a) Safe and suitable for service, general provisions	1,000	2,000
(b) Construction and maintenance of mechanically operated fire doors	1,000	2,000
(c) Construction and maintenance of hand-operated fire doors	1,000	2,000
230.83 Cylinder cocks:		
(1) Failure to properly equip with cylinder cocks	1,000	1,500
(2) Failure to properly maintain cylinder cocks	1,000	1,500
230.84 Sanders:		
(1) Inoperable sanders	1,000	1,500
(2) Failure to test sanders	1,000	1,500
230.85 Audible warning devices:		
(a) General provisions	1,000	1,500
(b) Sound level measurements, Failure to properly take	1,000	1,500
230.86 Required illumination:		
(a) General provisions	1,000	1,500
(b) Dimming device, Failure to properly equip with	1,000	1,500
(c) Multiple locomotives, Failure of lead locomotive to display headlight	1,000	1,500
230.87 Cab lights: Failure to properly equip with	1,000	2,000
230.88 Throttles: Failure to properly maintain, equip	1,000	2,000
230.89 Reverse gear:		
(a) General provisions	1,000	2,000
(b) Air-operated power reverse gear	1,000	2,000
(c) Power reverse gear reservoirs	1,000	2,000
230.90 Draw gear and draft systems:		
(a) Maintenance and testing	1,000	1,500
(b) Safety bars and chains, general	1,000	1,500
(c) Safety bars and chains, minimum length	1,000	1,500
(d) Lost motion between steam locomotive and tender	1,000	1,500
(e) Spring buffers: Improper application, compression	1,000	1,500
230.91 Chafing irons: Improper application, maintenance	1,000	1,500

Section	Violation	Willful violation
230.92 Draw gear, draft systems: Improperly maintained, fastened	1,000	1,500
230.93 Pistons and piston rods:		
(a) Failure to properly inspect, maintain, renew	1,000	2,000
(b) Fasteners: Failure to keep tight, properly equip	1,000	2,000
230.94 Crossheads: Improperly maintained, excess clearance	1,000	2,000
230.95 Guides: Failure to securely fasten, properly maintain	1,000	2,000
230.96 Main, side, valve motion rods:		
(a) General	1,000	2,000
(b) Repairs.		
(1) Failure to make in accordance with accepted national standard	1,000	2,000
(2) Failure to submit written request for approval prior to welding	1,000	2,000
(c) Bearings and bushings	1,000	1,500
(d) Rod side motion: Excessive motion	1,000	1,500
(e) Oil, grease cups: Failure to securely fasten, properly equip	1,000	1,500
(f) Main rod bearings:		
(1) excessive bore	1,000	1,500
(2) excessive lost motion	1,000	1,500
(g) Side rod bearings, excessive bore	1,000	1,500
230.97 Crank pins:		
(a) General provisions	1,000	2,000
(b) Maintenance: Failure to maintain in safe, suitable condition	1,000	2,000
230.98 Driving, trailing, engine truck axles:		
(a) Condemning defects	1,000	2,000
(b) Journal diameter: Failure to stamp on end of axle	750	1,000
230.99 Tender truck axle: Insufficient diameter	1,000	2,000
230.100 Defects in tender truck axles and journals:		
(a) Tender truck axle condemning defects	1,000	2,000
(b) Tender truck journal condemning defects	1,000	2,000
230.101 Steam locomotive driving journal boxes:		
(a) Driving journal boxes: Failure to properly maintain	1,000	2,000
(b) Broken bearings: Failure to renew	1,000	2,000
(c) Loose bearings: Failure to repair or renew	1,000	2,000
230.102 Tender plain bearing journal boxes: Failure to repair	1,000	1,500
230.103 Tender roller bearing journal boxes: Failure to properly maintain	1,000	1,500
230.104 Driving box shoes and wedges: Failure to properly maintain	1,000	1,500
230.105 Lateral motion:		
(a) Condemning limits: Total lateral motion in excess of	1,000	1,500
(b) Limits exceeded, failure to demonstrate conditions require additional lateral motion	1,000	1,500
(c) Interferes with other parts of steam locomotive	1,000	1,500
230.106 Steam locomotive frame:		
(a) Failure to properly inspect and/or maintain	1,000	2,000
(b) Broken frames, not properly patched or secured	2,500	5,000
230.107 Tender frame and body:		
(a) Failure to properly maintain	1,000	1,500
(b) Height difference between tender deck and steam locomotive cab floor or deck excessive	1,000	1,500
(c) Gangway minimum width excessive	1,000	1,500
(d) Tender frame condemning defects	1,500	3,000
230.108 Steam locomotive leading and trailing trucks:		
(a) Failure to properly maintain	1,000	1,500
(b) Safety chain, suitable safety chain not provided	1,000	1,500
(c) Insufficient truck clearance	1,000	2,000
230.109 Tender trucks:		
(a):		
(1) Tender truck frames	1,000	2,000
(2) Tender truck center plate	1,000	2,000
(b) Tender truck bolsters: Failure to properly maintain	1,500	3,000
(c) Condemning defects, springs and/or spring rigging	1,000	2,000
(d) Truck securing arrangement: Not properly maintained	1,000	1,500
(e) Side bearings, truck centering devices	1,000	2,000
(f) Friction side bearings: Run in contact	1,000	2,000
(g):		
(1) Side bearings, failure to equip rear trucks with	1,000	2,000
(2) Insufficient clearance of	1,000	2,000
230.110 Pilots:		
(a) General provisions	1,000	1,500
(b) Clearance, insufficient or excessive	1,000	1,500
230.111 Spring rigging:		
(a) Arrangement of springs and equalizers	1,000	2,000
(b) Spring or spring rigging condemning defects	1,000	2,000
230.112 Wheels and tires:		
(a) Improperly Mounted, excess variance in axle diameter	1,500	3,000
(b) Out of gage	1,000	2,000

Section	Violation	Willful violation
(c) Flange distance variance, excessive	1,000	2,000
(d) Tire thickness, insufficient	1,000	2,000
(e) Tire width, insufficient	1,000	2,000
230.113 Wheels and tire defects:		
(1) Failure to repair	1,000	2,000
(2) Welding on, except as otherwise provided for	1,500	3,000
(a) Cracks or breaks in	1,000	2,000
(b) Flat spots	1,000	2,000
(c) Chipped flange	1,000	2,000
(d) Broken rim	1,000	2,000
(e) Shelled-out spots	1,000	2,000
(f) Seams	1,000	2,000
(g) Worn flanges, excessive wear	1,000	2,000
(h) Worn treads, excessive wear	1,000	2,000
(i) Flange height, insufficient or excessive	1,000	2,000
(j) Rim thickness, insufficient	1,000	2,000
(k) Wheel diameter, excessive variance	1,000	2,000
230.114 Wheel centers:		
(a) Filling blocks and shims	1,000	2,000
(b) Wheel center condemning limits, failure to repair	1,000	2,000
(c) Wheel center repairs	1,000	2,000
(d) Counterbalance maintenance	1,000	2,000
230.115 Feed water tanks:		
(a) General provisions	1,000	2,000
(b) Inspection frequency, failure to inspect as required	1,000	1,500
(c) Top of tender: Improperly maintained and/or equipped	1,000	1,500
230.116 Oil tanks:		
(1) Failure to properly maintain	2,500	5,000
(2) Failure to equip with complying safety cut-off device	5,000	7,500

[1] Failure to observe any condition for movement set forth in § 230.12 will deprive the railroad of the benefit of the movement-for-repair provision and make the railroad and any responsible individuals liable for penalty under the particular regulatory section(s) concerning the substantive defect(s) present on the locomotive at the time of movement. Failure to comply with § 230.12 will result in the lapse of any affected waiver.

PART 231—RAILROAD SAFETY APPLIANCE STANDARDS

Sec.

231.0 Applicability and penalties.
231.1 Box and other house cars built or placed in service before October 1, 1966.
231.2 Hopper cars and high-side gondolas with fixed ends.
231.3 Drop-end high-side gondola cars.
231.4 Fixed-end low-side gondola and low-side hopper cars.
231.5 Drop-end low-side gondola cars.
231.6 Flat cars.
231.7 Tank cars with side platforms.
231.8 Tank cars without side sills and tank cars with short side sills and end platforms.
231.9 Tank cars without end sills.
231.10 Caboose cars with platforms.
231.11 Caboose cars without platforms.
231.12 Passenger-train cars with wide vestibules.
231.13 Passenger-train cars with open-end platforms.
231.14 Passenger-train cars without end platforms.
231.15 Steam locomotives used in road service.
231.16 Steam locomotives used in switching service.
231.17 Specifications common to all steam locomotives.
231.18 Cars of special construction.
231.19 Definition of ''Right'' and ''Left.''
231.20 Variation in size permitted.
231.21 Tank cars without underframes.
231.22 Operation of track motor cars.
231.23 Unidirectional passenger-train cars adaptable to van-type semi-trailer use.
231.24 Box and other house cars with roofs, 16 feet 10 inches or more above top of rail.
231.25 Track motorcars (self-propelled 4-wheel cars which can be removed from the rails by men).
231.26 Pushcars.
231.27 Box and other house cars without roof hatches or placed in service after October 1, 1966.
231.28 Box and other house cars with roof hatches built or placed in service after October 1, 1966.
231.29 Road locomotives with corner stairways.
231.30 Locomotives used in switching service.
231.31 Drawbars for freight cars; standard height.
APPENDIX A TO PART 231—SCHEDULE OF CIVIL PENALTIES

AUTHORITY: 49 U.S.C. 20102–20103, 20107, 20131, 20301–20303, 21301–21302, 21304; 28 U.S.C. 2461, note; and 49 CFR 1.49.

SOURCE: 33 FR 19663, Dec. 25, 1968, unless otherwise noted.

NOTE: Where rivets or bolts are required in this part 231 a two-piece steel rivet may be used consisting of:

(a) A solid shank of one-half (½) inch minimum diameter steel or material of equal or greater strength having cold forged head on one end, a shank length for material thickness fastened, locking grooves, breakneck groove and pull grooves (all annular grooves) on the opposite end.

(b) A collar of similar material which is cold swaged into the locking grooves forming a head for the opposite end of item (a) after the pull groove section has been removed.

§ 231.0 Applicability and penalties.

(a) Except as provided in paragraphs (b) and (c) of this section, this part applies to all standard gage railroads.

(b) This part does not apply to:

(1) A railroad that operates only on track inside an installation which is not part of the general railroad system of transportation; or

(2) Rapid transit operations in an urban area that are not connected with the general railroad system of transportation.

(3) Freight and other non-passenger trains of four-wheel coal cars.

(4) Freight and other non-passenger trains of eight-wheel standard logging cars if the height of each car from the top of the rail to the center of the coupling is not more than 25 inches.

(5) A locomotive used in hauling a train referred to in paragraph (b)(4) of this section when the locomotive and cars of the train are used only to transport logs.

(c) Except for the provisions governing uncoupling devices, this part does not apply to Tier II passenger equipment as defined in § 238.5 of this chapter (*i.e.*, passenger equipment operating at speeds exceeding 125 mph but not exceeding 150 mph).

(d) As used in this part, *carrier* means ''railroad,'' as that term is defined below.

(e) *Railroad* means all forms of non-highway ground transportation that run on rails or electromagnetic guideways, including (1) commuter or other short-haul rail passenger service in a metropolitan or suburban area, and (2) high speed ground transportation systems that connect metropolitan areas, without regard to whether they use new technologies not associated with traditional railroads. Such term does not include rapid transit operations within an urban area that are not connected to the general railroad system of transportation.

(f) Any person (an entity of any type covered under 1 U.S.C. 1, including but not limited to the following: a railroad; a manager, supervisor, official, or other employee or agent of a railroad; any owner, manufacturer, lessor, or lessee of railroad equipment, track, or facilities; any independent contractor providing goods or services to a railroad; and any employee of such owner, manufacturer, lessor, lessee, or independent contractor) who violates any requirement of this part or causes the violation of any such requirement is subject to a civil penalty of at least $550 and not more than $16,000 per violation, except that: penalties may be assessed against individuals only for willful violations, and, where a grossly negligent violation or a pattern of repeated violations has created an imminent hazard of death or injury to persons, or has caused death or injury, a penalty not to exceed $27,000 per violation may be assessed. Each day a violation continues shall constitute a separate offense. See appendix A to this part for a statement of agency civil penalty policy.

(g) Except as provided in paragraph (b) of this section, § 231.31 also applies to an operation on a 24-inch, 36-inch, or other narrow gage railroad.

[54 FR 33229, Aug. 14, 1989, as amended at 63 FR 11623, Mar. 10, 1998; 64 FR 25660, May 12, 1999; 66 FR 4192, Jan. 17, 2001; 69 FR 30594, May 28, 2004; 72 FR 51197, Sept. 6, 2007]

§ 231.1 Box and other house cars built or placed in service before October 1, 1966.

Except for box and other house cars that comply with either § 231.27 or § 231.28, each box and other house car shall be equipped to meet the following specifications:

(a) *Handbrake*—(1) *Number*. One efficient handbrake which shall operate in

harmony with the power brake installed on the car. Each such hand-brake shall (i) provide the same degree of safety as the design shown on plate A, or (ii) provide the same degree of safety as that specified in §231.27.

(2) *Dimensions*. (i) The brake shaft shall be not less than 1¼ inches in diameter, of wrought iron or steel without weld.

(ii) The brake wheel may be flat or dished, not less than 15, preferably 16, inches in diameter, of malleable iron, wrought iron, or steel.

(3) *Location*. (i) The hand brake shall be so located that it can be safely operated while car is in motion.

(ii) The brake shaft shall be located on end of car, to the left of and not less than 17 nor more than 22 inches from center.

(iii) Carriers are not required to change the brakes from right to left side on steel or steel-underframe cars with platform end sills in service July 1, 1911, except when such appliances are renewed, at which time they must be made to comply with the standards prescribed.

(iv) Carriers are not required to change the location of brake wheels and brake shafts on cars in service July 1, 1911, where the appliances are within 3 inches of the required location, except that when cars undergo regular repairs they must then be made to comply with the standards prescribed.

(4) *Manner of application*. (i) There shall be not less than 4 inches clearance around rim of brake wheel.

(ii) Outside edge of brake wheel shall be not less than 4 inches from a vertical plane parallel with end of car and passing through the inside face of knuckle when closed with coupler horn against the buffer block or end sill.

(iii) Top brake-shaft support shall be fastened with not less than ½-inch bolts or rivets. (See plate A.)

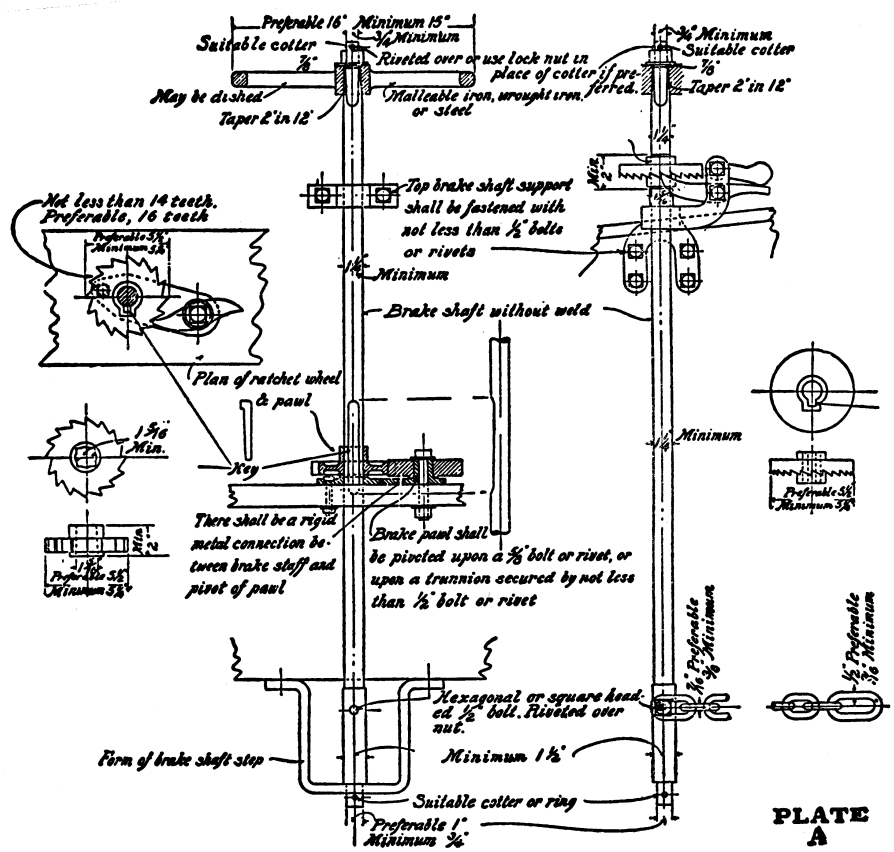

(iv) A brake-shaft step shall support the lower end of brake shaft. A brake-shaft step which will permit the brake chain to drop under the brake shaft shall not be used. U-shaped form of brakeshaft step is preferred. (See plate A.)

(v) Brake shaft shall be arranged with a square fit at its upper end to secure the hand-brake wheel; said square fit shall be not less than seven-eighths of an inch square. Square-fit taper, nominally 2 in 12 inches. (See plate A.)

(vi) Brake chain shall be of not less than 3/8-, preferably 7/16-, inch wrought iron or steel, with a link on the brakerod end of not less than 7/16-, preferably 1/2-, inch wrought iron or steel, and shall be secured to brake-shaft drum by not less than 1/2-inch hexagon or square-headed bolt. Nut on said bolt shall be secured by riveting end of bolt over nut. (See plate A.)

(vii) Lower end of brake shaft shall be provided with a trunnion of not less than 3/4-, preferably 1, inch in diameter extending through brake-shaft step and held in operating position by a suitable cotter or ring. (See plate A.)

(viii) Brake-shaft drum shall be not less than 1 1/2 inches in diameter. (See plate A.)

(ix) Brake ratchet wheel shall be secured to brake shaft by a key or square fit; said square fit shall be not less than 1 5/16 inches square. When ratchet wheel with square fit is used, provision shall be made to prevent ratchet wheel from rising on shaft to disengage brake pawl. (See plate A.)

(x) Brake ratchet wheel shall be not less than 5¼, preferably 5½, inches in diameter and shall have not less than 14, preferably 16, teeth. (See plate A.)

(xi) If brake ratchet wheel is more than 36 inches from brake wheel, a brake-shaft support shall be provided to support this extended upper portion of brake shaft; said brake-shaft support shall be fastened with not less than ½-inch bolts or rivets.

(xii) The brake pawl shall be pivoted upon a bolt or rivet not less than five-eighths of an inch in diameter, or upon a trunnion secured by not less than ½-inch bolt or rivet, and there shall be a rigid metal connection between brake shaft and pivot of pawl.

(xiii) Brake wheel shall be held in position on brake shaft by a nut on a threaded extended end of brake shaft; said threaded portion shall be not less than three-fourths of an inch in diameter; said nut shall be secured by riveting over or by the use of a lock nut or suitable cotter.

(xiv) Brake wheel shall be arranged with a square fit for brake shaft in hub of said wheel; taper of said fit, nominally 2 in 12 inches. (See plate A.)

(b) *Brake step*. If brake step is used, it shall be not less than 28 inches in length. Outside edge shall be not less than 8 inches from face of car and not less than 4 inches from a vertical plane parallel with end of car and passing through the inside face of knuckle when closed with coupler horn against the buffer block or end sill.

(1) *Manner of application*. Brake step shall be supported by not less than two metal braces having a minimum cross-sectional area ⅜ by 1½ inches or equivalent, which shall be securely fastened to body of car with not less than ½-inch bolts or rivets.

(c) *Running boards*—(1) *Number*. One longitudinal running board. On outside-metal-roof cars two latitudinal extensions.

(2) *Dimensions*. Longitudinal running board shall be not less than 18 and preferably 20 inches in width. Latitudinal extensions shall be not less than 24 inches in width. Wooden running boards or extensions hereafter installed shall be constructed of wood not less than 1⅛ inches in thickness.

(3) *Location*. Full length of car, center of roof. On outside-metal-roof cars there shall be two latitudinal extensions from longitudinal running board to ladder locations, except on refrigerator cars where such latitudinal extensions cannot be applied on account of ice hatches.

(4) *Manner of application*. (i) Running board shall be continuous from end to end and not cut or hinged at any point: *Provided,* That the length and width of running board may be made up of a number of pieces securely fastened to saddle-blocks with screws, bolts, or rivets.

(ii) The ends of longitudinal running board shall be not less than 6 nor more than 10 inches from a vertical plane parallel with end of car and passing through the inside face of knuckle when closed with coupler-horn against the buffer-block or endsill; and if more than 4 inches from edge of roof of car, shall be securely supported their full width by substantial metal braces.

(iii) Running board shall be securely fastened to car and be made of wood or of material which provides the same as or a greater degree of safety than wood of 1⅛ inches thickness. When made of material other than wood the tread surface shall be of anti-skid design and constructed with sufficient open space to permit the elimination of snow and ice from the tread surface.

(d) *Sill steps*—(1) *Number*. Four.

(2) *Dimensions*. Minimum cross-sectional area ½ by 1½ inches, or equivalent, of wrought iron or steel. Minimum length of tread, 10, preferably 12, inches. Minimum clear depth, 8 inches.

(3) *Location*. (i) One near each end of each side of car, so that there shall be not more than 18 inches from end of car to center of tread of sill step.

(ii) Outside edge of tread of step shall be not more than 4 inches inside of face of side of car, preferably flush with side of car.

(iii) Tread shall be not more than 24, preferably not more than 22, inches above the top of rail.

(iv) Carriers are not required to change location of sill steps on cars in service July 1, 1911, where the appliances are within 3 inches of the required location, except that when cars undergo regular repairs they must then

be made to comply with the standards prescribed.

(4) *Manner of application.* (i) Sill steps exceeding 21 inches in depth shall have an additional tread.

(ii) Sill steps shall be securely fastened with not less than ½-inch bolts with nuts outside (when possible) and riveted over, or with not less than ½-inch rivets.

(e) *Ladders*—(1) *Number.* Four.

(2) *Dimensions.* (i) Minimum clear length of tread: Side ladders 16 inches; end ladders 14 inches. Maximum spacing between ladder treads, 19 inches.

(ii) Top ladder tread shall be located not less than 12 nor more than 18 inches from roof at eaves.

(iii) Spacing of side ladder treads shall be uniform within a limit of 2 inches from top ladder tread to bottom tread of ladder.

(iv) Maximum distance from bottom tread of side ladder to top tread of sill step, 21 inches.

(v) End ladder treads shall be spaced to coincide with treads of side ladders, a variation of 2 inches being allowed. Where construction of car will not permit the application of a tread of end ladder to coincide with bottom tread of side ladder, the bottom tread of end ladder must coincide with second tread from bottom of side ladder.

(vi) Hardwood treads, minimum dimensions 1½ by 2 inches.

(vii) Iron or steel treads, minimum diameter five-eighths of an inch.

(viii) Minimum clearance of treads, 2, preferably 2½, inches.

(3) *Location.* (i) One on each side, not more than 8 inches from right end of car; one on each end, not more than 8 inches from left side of car; measured from inside edge of ladder stile or clearance of ladder treads to corner of car.

(ii) Carriers are not required to change the location of ladders on cars in service July 1, 1911, where the appliances are within 3 inches of the required location, except that when cars undergo regular repairs they must then be made to comply with the standards prescribed.

(iii) Carriers are not required to change the end ladders on steel or steel underframe cars with platform end sill, in service July 1, 1911, except when such appliances are renewed, at which time they must be made to comply with the standards prescribed.

(4) *Manner of application.* (i) Metal ladders without stiles near corners of cars shall have foot guards or upward projections not less than 2 inches in height near inside end of bottom treads.

(ii) Stiles of ladders, projecting 2 or more inches from face of car, will serve as foot guards.

(iii) Ladders shall be securely fastened with not less than ½-inch bolts with nuts outside (when possible) and riveted over, or with not less than ½-inch rivets. Three-eighths-inch bolts may be used for wooden treads which are gained into stiles.

(f) *End ladder clearance.* (1) No part of car above end sills within 30 inches from side of car, except buffer block, brake shaft, brake wheel, brake step, running board or uncoupling lever shall extend to within 12 inches of a vertical plane parallel with end of car and passing through the inside face of knuckle when closed with coupler horn against the buffer block or end sill, and no other part of end of car or fixtures on same above end sills, other than exceptions herein noted, shall extend beyond the outer face of buffer block.

(2) Carriers are not required to make changes to secure additional end-ladder clearance on cars in service July 1, 1911, that have 10 or more inches end-ladder clearance, within 30 inches of side of car, until car is shopped for work amounting to practically rebuilding body of car, at which time they must be made to comply with the standards prescribed.

(g) *Roof handholds*—(1) *Number.* (i) One over each ladder.

(ii) One right-angle handhold may take the place of two adjacent specified roof handholds, provided the dimensions and locations coincide, and that an extra leg is securely fastened to car at point of angle.

(2) *Dimensions.* Minimum diameter, five-eighths of an inch, wrought iron or steel. Minimum clear length, 16 inches. Minimum clearance, 2, preferably 2½ inches.

(3) *Location.* (i) On roof of car, one parallel to treads of each ladder, not less than 8 nor more than 15 inches

from edge of roof, except on refrigerator cars where ice hatches prevent, when location may be nearer edge of roof.

(ii) Carriers are not required to change the location of handholds on cars in service July 1, 1911, except end handhold under end sills, where the appliances are within 3 inches of the required location, except that when cars undergo regular repairs they must then be made to comply with the standards prescribed.

(4) *Manner of application*. Roof handholds shall be securely fastened with not less than ½-inch bolts with nuts outside (when possible) and riveted over, or with not less than ½-inch rivets.

(h) *Side handholds*—(1) *Number*. Four. (Tread of side ladder is a side handhold.)

(2) *Dimensions*. Minimum diameter, five-eighths of an inch, wrought iron or steel. Minimum clear length, 16 inches, preferably 24 inches. Minimum clearance, 2, preferably 2½, inches.

(3) *Location*. (i) Horizontal, one near each end on each side of car. Side handholds shall be not less than 24 nor more than 30 inches above center line of coupler, except as provided above, where tread of ladder is a handhold. Clearance of outer end of handhold shall be not more than 8 inches from end of car.

(ii) Carriers are not required to change the location of handholds, on cars in service July 1, 1911, except end handholds under end sills, where the appliances are within 3 inches of the required location, except that when cars undergo regular repairs they must then be made to comply with the standards prescribed.

(4) *Manner of application*. Side handholds shall be securely fastened with not less than ½-inch bolts with nuts outside (when possible) and riveted over, or with not less than ½-inch rivets.

(i) *Horizontal end handholds*—(1) *Number*. Eight or more, four on each end of car. (Tread of end ladder is an end handhold.)

(2) *Dimensions*. (i) Minimum diameter, five-eighths of an inch, wrought iron or steel. Minimum clear length, 16 inches, preferably 24 inches.

(ii) A handhold 14 inches in length may be used where it is impossible to use one 16 inches in length.

(iii) Minimum clearance, 2, preferably 2½, inches.

(3) *Location*. (i) One near each side on each end of car, not less than 24 nor more than 30 inches above center line of coupler, except as provided above, when tread of end ladder is an end handhold. Clearance of outer end of handhold shall be not more than 8 inches from side of car.

(ii) One near each side of each end of car on face of end sill or sheathing over end sill, projecting outward or downward. Clearance of outer end of handhold shall be not more than 16 inches from side of car.

(iii) On each end of cars with platform end sills 6 or more inches in width, measured from end post or siding and extending entirely across end of car, there shall be one additional end handhold not less than 24 inches in length, located near center of car, not less than 30 nor more than 60 inches above platform end sill.

(iv) Carriers are not required to change the location of handholds, on cars in service July 1, 1911, except end handholds under end sills, where the appliances are within 3 inches of the required location, except that when cars undergo regular repairs they must then be made to comply with the standards prescribed.

(4) *Manner of application*. Horizontal end handholds shall be securely fastened with not less than ½-inch bolts with nuts outside (when possible) and riveted over, or with not less than ½-inch rivets.

(j) *Vertical end handholds*—(1) *Number*. Two on full-width platform end-sill cars, as heretofore described.

(2) *Dimensions*. Minimum diameter, five-eighths of an inch, wrought iron or steel. Minimum clear length, 18, preferably 24, inches. Minimum clearance, 2, preferably 2½, inches.

(3) *Location*. (i) One on each end of car opposite ladder, not more than 8 inches from side of car; clearance of bottom end of handhold shall be not less than 24 nor more than 30 inches above center line of coupler.

(ii) Carriers are not required to change the location of handholds, on

cars in service July 1, 1911, except end handholds under end sills, where the appliances are within 3 inches of the required location, except that when cars undergo regular repairs they must then be made to comply with the standards prescribed.

(4) *Manner of application.* Vertical end handholds shall be securely fastened with not less than ½-inch bolts with nuts outside (when possible) and riveted over, or with not less than ½-inch rivets.

(k) *Uncoupling levers*—(1) *Number.* Two. Uncoupling levers may be either single or double, and of any efficient design.

(2) *Dimensions.* (i) Handles of uncoupling levers, except those shown on plate B or of similar designs, shall be not more than 6 inches from sides of car.

(ii) Uncoupling levers of design shown on plate B and of similar designs shall conform to the following prescribed limits:

(iii) Handles shall be not more than 12, preferably 9, inches from sides of cars. Center lift arms shall be not less than 7 inches long.

(iv) Center of eye at end of center lift arm shall be not more than 3½ inches beyond center of eye of uncoupling pin of coupler when horn of coupler is against the buffer block or end sill. (See plate B.)

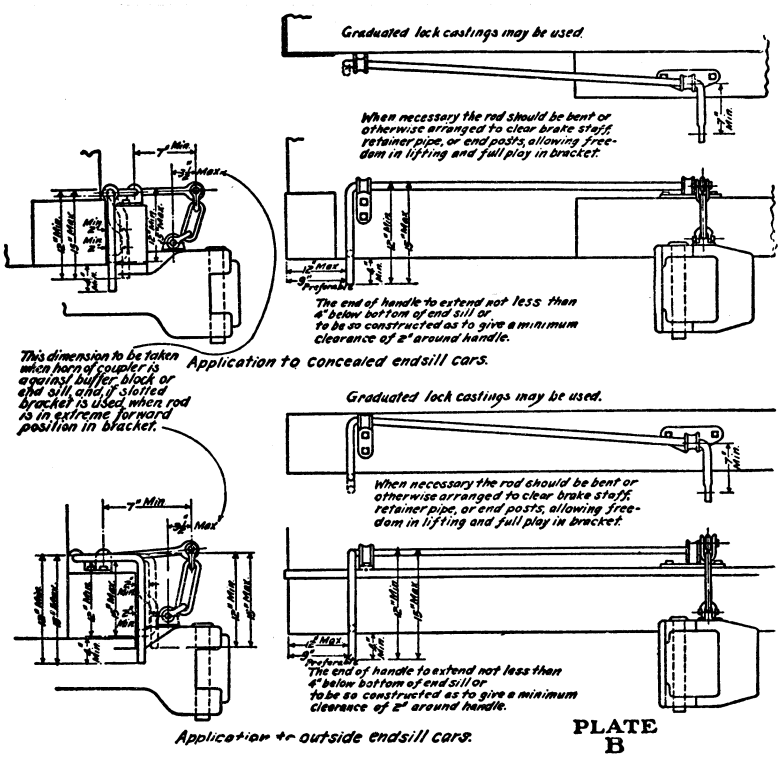

PLATE B

(v) Ends of handles shall extend not less than 4 inches below bottom of end sill or shall be so constructed as to give a minimum clearance of 2 inches

around handle. Minimum drop of handles shall be 12 inches; maximum, 15 inches over all. (See plate B.)

(vi) Handles of uncoupling levers of the ''rocking'' or ''push-down'' type shall be not less than 18 inches from top of rail when lock block has released knuckle, and a suitable stop shall be provided to prevent inside arm from flying up in case of breakage.

(3) *Location*. One on each end of car. When single lever is used, it shall be placed on left side of end of car.

(Secs. 2, 4, and 6, 27 Stat. 531, as amended; secs, 1 and 3, 32 Stat. 943, as amended; sec. 6(e) and (f), 80 Stat. 939 (45 U.S.C. 2, 4, 6, 8, and 10, 11–16 and 49 U.S.C. 103(c)(1))

[33 FR 19663, Dec. 25, 1968, as amended at 49 FR 26745, June 29, 1984]

§ 231.2 Hopper cars and high-side gondolas with fixed ends.

(Cars with sides more than 36 inches above the floor are high-side cars.)

(a) *Hand brakes*—(1) *Number*. Same as specified for ''Box and other house cars'' (see § 231.1(a)(1)).

(2) *Dimensions*. Same as specified for ''Box and other house cars'' (see § 231.1(a)(2)).

(3) *Location*. (i) Each hand brake shall be so located that it can be safely operated while car is in motion.

(ii) The brake shaft shall be located on end of car to the left of, and not more than 22 inches from, center.

(iii) Carriers are not required to change the brakes from right to left side on steel or steel-underframe cars with platform end sills, in service July 1, 1911, except when such appliances are renewed, at which time they must be made to comply with the standards prescribed.

(iv) Carriers are not required to change the location of brake wheels and brake shafts on cars in service July 1, 1911, where the appliances are within 3 inches of the required location, except that when cars undergo regular repairs they must then be made to comply with the standards prescribed.

(4) *Manner of application*. Same as specified for ''Box and other house cars'' (see § 231.1(a)(4)).

(b) *Brake step*. Same as specified for ''Box and other house cars'' (see § 231.1 (b)).

(c) *Sill steps*. Same as specified for ''Box and other house cars'' (see § 231.1(d)).

(d) *Ladders*—(1) *Number*. Same as specified for ''Box and other house cars'' (see § 231.1(e)(1)).

(2) *Dimensions*. Same as specified for ''Box and other house cars'' (see § 231.1(e)(2)), except that top ladder tread shall be located not more than 4 inches from top of car.

(3) *Location*. Same as specified for ''Box and other house cars'' (see § 231.1(e)(3)).

(4) *Manner of application*. Same as specified for ''Box and other house cars'' (see § 231.1(e)(4)).

(e) *Side handholds*. Same as specified for ''Box and other house cars'' (see § 231.1(h)).

(f) *Horizontal end handholds*. Same as specified for ''Box and other house cars'' (see § 231.1(i)).

(g) *Vertical end handholds*. Same as specified for ''Box and other house cars'' (see § 231.1(j)).

(h) *Uncoupling levers*. Same as specified for ''Box and other house cars'' (see § 231.1(k)).

(i) *End-ladder clearance*. (1) No part of car above end sills within 30 inches from side of car, except buffer block, brake shaft, brake wheel, brake step, or uncoupling lever shall extend to within 12 inches of a vertical plane parallel with end of car and passing through the inside face of knuckle when closed with coupler horn against the buffer block or end sill, and no other part of end of car or fixtures on same above end sills, other than exceptions herein noted, shall extend beyond the outer face of buffer block.

(2) Carriers are not required to make changes to secure additional end-ladder clearance on cars in service July 1, 1911, that have 10 or more inches end-ladder clearance within 30 inches of side of car, until car is shopped for work amounting to practically rebuilding body of car, at which time they must be made to comply with the standards prescribed.

§ 231.3 Drop-end high-side gondola cars.

(a) *Hand brakes*—(1) *Number*. Same as specified for ''Box and other house cars'' (see § 231.1(a)(1)).

(2) *Dimensions*. Same as specified for ''Box and other house cars'' (see § 231.1(a)(2)).

(3) *Location*. (i) Each hand brake shall be so located that it can be safely operated while car is in motion.

(ii) The brake shaft shall be located on end of car to the left of center.

(iii) Carriers are not required to change the brakes from right to left side on steel or steel-underframe cars with platform end sills, in service July 1, 1911, except when such appliances are renewed, at which time they must be made to comply with the standards prescribed.

(4) *Manner of application*. Same as specified for ''Box and other house cars'' (see § 231.1(a)(4)).

(b) *Sill steps*. Same as specified for ''Box and other house cars'' (see § 231.1(d)).

(c) *Ladders*—(1) *Number*. Two.

(2) *Dimensions*. Same as specified for ''Box and other house cars'' (see § 231.1(e)(2)), except that top ladder tread shall be located not more than 4 inches from top of car.

(3) *Location*. (i) One on each side, not more than 8 inches from right end of car, measured from inside edge of ladder stile or clearance of ladder treads to corner of car.

(ii) Carriers are not required to change the location of ladders on cars in service July 1, 1911, where the appliances are within 3 inches of the required location, except that when cars undergo regular repairs they must then be made to comply with the standards prescribed.

(4) *Manner of application*. Same as specified for ''Box and other house cars'' (see § 231.1(e)(4)).

(d) *Side handholds*. Same as specified for ''Box and other house cars'' (see § 231.1(h)).

(e) *Horizontal end handholds*—(1) *Number*. Four.

(2) *Dimensions*. Same as specified for ''Box and other house cars'' (see § 231.1(i)(2)).

(3) *Location*. (i) One near each side of each end of car on face of end sill. Clearance of outer end of handhold shall be not more than 16 inches from side of car.

(ii) Carriers are not required to change the location of handholds on cars in service July 1, 1911, except end handholds under end sills, where the appliances are within 3 inches of the required location, except that when cars undergo regular repairs they must then be made to comply with the standards prescribed.

(4) *Manner of application*. Same as specified for ''Box and other house cars'' (see § 231.1(i)(4)).

(f) *Uncoupling levers*. Same as specified for ''Box and other house cars'' (see § 231.1(k)).

(g) *End ladder clearance*. (1) No part of car above end sills within 30 inches from side of car, except buffer block, brake shaft, brake wheel or uncoupling lever shall extend to within 12 inches of a vertical plane parallel with end of car and passing through the inside face of knuckle when closed with coupler horn against the buffer block or end sill, and no other part of end of car or fixtures on same above end sills, other than exceptions noted in this subparagraph, shall extend beyond the outer face or buffer block.

(2) Carriers are not required to make changes to secure additional end-ladder clearance on cars in service July 1, 1911, that have 10 or more inches end-ladder clearance, within 30 inches of side of car, until car is shopped for work amounting to practically rebuilding body of car, at which time they must be made to comply with the standards prescribed.

§ 231.4 Fixed-end low-side gondola and low-side hopper cars.

(Cars with sides 36 inches or less above the floor are low-side cars.)

(a) *Hand brakes*—(1) *Number*. Same as specified for ''Box and other house cars'' (see § 231.1(a)(1)).

(2) *Dimensions*. Same as specified for ''Box and other house cars'' (see § 231.1(a)(2)).

(3) *Location*. (i) Each hand brake shall be so located that it can be safely operated while car is in motion.

(ii) The brake shaft shall be located on end of car, to the left of and not more than 22 inches from center.

(iii) Carriers are not required to change the brakes from right to left side on steel or steel-underframe cars with platform end sills, in service July 1, 1911, except when such appliances are

renewed, at which time they must be made to comply with the standards prescribed.

(iv) Carriers are not required to change the location of brake wheels and brake shafts on cars in service July 1, 1911, where the appliances are within 3 inches of the required location, except that when cars undergo regular repairs they must then be made to comply with the standards prescribed.

(4) *Manner of application*. Same as specified for ''Box and other house cars'' (see §231.1(a)(4)).

(b) *Brake step*. Same as specified for ''Box and other house cars'' (see §231.1(b)).

(c) *Sill steps*. Same as specified for ''Box and other house cars'' (see §231.1(d)).

(d) *Side handholds*—(1) *Number*. Same as specified for ''Box and other house cars'' (see §231.1(h)(1)).

(2) *Dimensions*. Same as specified for ''Box and other house cars'' (see §231.1(h)(2)).

(3) *Location*. (i) Horizontal, one near each end on each side of car, not less than 24 nor more than 30 inches above center line of coupler, if car construction will permit, but handhold shall not project above top of side. Clearance of outer end of handhold shall be not more than 8 inches from end of car.

(ii) Carriers are not required to change the location of handholds on cars in service July 1, 1911, except end handholds under end sills, where the appliances are within 3 inches of the required location, except that when cars undergo regular repairs they must then be made to comply with the standards prescribed.

(4) *Manner of application*. Same as specified for ''Box and other house cars'' (see §231.1(h)(4)).

(e) *Horizontal end handholds*—(1) *Number*. Same as specified for ''Box and other house cars'' (see §231.1(i)(1)).

(2) *Dimensions*. Same as specified for ''Box and other house cars'' (see §231.1(i)(2)).

(3) *Location*. (i) One near each side on each end of car, not less than 24 nor more than 30 inches above center line of coupler, if car construction will permit. Clearance of outer end of handhold shall be not more than 8 inches from side of car.

(ii) One near each side of each end of car on face of end sill, projecting outward or downward. Clearance of outer end of handhold shall be not more than 16 inches from side of car.

(iii) Carriers are not required to change the location of handholds on cars in service July 1, 1911, except end handholds under end sills, where the appliances are within 3 inches of the required location, except that when cars undergo regular repairs they must then be made to comply with the standards prescribed.

(4) *Manner of application*. Same as specified for ''Box and other house cars'' (see §231.1(i)(4)).

(f) *Uncoupling levers*. Same as specified for ''Box and other house cars'' (see §231.1(k)).

(g) *End-ladder clearance*. (1) No part of car above end sills within 30 inches from side of car, except buffer block, brake shaft, brake step, brake wheel or uncoupling lever shall extend to within 12 inches of a vertical plane parallel with end of car and passing through the inside face of knuckle when closed with coupler horn against the buffer block or end sill, and no other part of end of car or fixtures on same above end sills, other than exceptions noted in this subparagraph, shall extend beyond the outer face of buffer block.

(2) Carriers are not required to make changes to secure additional end-ladder clearance on cars in service July 1, 1911, that have 10 or more inches end-ladder clearance, within 30 inches of side of car, until car is shopped for work amounting to practically rebuilding body of car, at which time they must be made to comply with the standards prescribed.

§231.5 Drop-end low-side gondola cars.

(a) *Hand brakes*—(1) *Number*. Same as specified for ''Box and other house cars'' (see §231.1(a)(1)).

(2) *Dimensions*. Same as specified for ''Box and other house cars'' (see §231.1(a)(2)).

(3) *Location*. (i) Each hand brake shall be so located that it can be safely operated while car is in motion.

(ii) The brake shaft shall be located on end of car to the left of center.

(iii) Carriers are not required to change the brakes from right to left side on steel or steel-underframe cars with platform end sills, in service July 1, 1911, except when such appliances are renewed, at which time they must be made to comply with the standards prescribed.

(4) *Manner of application*. Same as specified for ''Box and other house cars'' (see § 231.1(a)(4)), provided that top brake-shaft support may be omitted.

(b) *Sill steps*. Same as specified for ''Box and other house cars'' (see § 231.1(d)).

(c) *Side handholds*—(1) *Number*. Same as specified for ''Box and other house cars'' (see § 231.1(h)(1)).

(2) *Dimensions*. Same as specified for ''Box and other house cars'' (see § 231.1(h)(2)).

(3) *Location*. (i) Horizontal, one near each end on each side of car, not less than 24 nor more than 30 inches above center line of coupler, if car construction will permit, but handhold shall not project above top of side. Clearance of outer end of handhold shall be no more than 8 inches from end of car.

(ii) Carriers are not required to change the location of handholds on cars in service July 1, 1911, except end handholds under end sills, where the appliances are within 3 inches of the required location, except that when cars undergo regular repairs they must then be made to comply with the standards prescribed.

(4) *Manner of application*. Same as specified for ''Box and other house cars'' (see § 231.1(h)(4)).

(d) *End handholds*—(1) *Number*. Four.

(2) *Dimensions*. Same as specified for ''Box and other house cars'' (see § 231.1(i)(2)).

(3) *Location*. (i) Horizontal, one near each side of each end of car on face of end sill. Clearance of outer end of handhold shall be not more than 16 inches from side of car.

(ii) Carriers are not required to change the location of handholds on cars in service July 1, 1911, except end handholds under end sills, where the appliances are within 3 inches of the required location, except that when cars undergo regular repairs they must then be made to comply with the standards prescribed.

(4) *Manner of application*. Same as specified for ''Box and other house cars'' (see § 231.1(i)(4)).

(e) *Uncoupling levers*. Same as specified for ''Box and other house cars'' (see § 231.1(k)).

(f) *End-ladder clearance*. (1) No part of car above end sills within 30 inches from side of car, except buffer block, brake shaft, brake wheel or uncoupling lever shall extend to within 12 inches of a vertical plane parallel with end of car and passing through the inside face of knuckle when closed with coupler horn against the buffer block or end sill, and no other part of end of car or fixtures on same above end sills, other than exceptions noted in this subparagraph shall extend beyond the outer face of buffer block.

(2) Carriers are not required to make changes to secure additional end-ladder clearance on cars in service July 1, 1911, that have 10 or more inches end-ladder clearance, within 30 inches of side of car, until car is shopped for work amounting to practically rebuilding body of car, at which time they must be made to comply with the standards prescribed.

§ 231.6 Flat cars.

(Cars with sides 12 inches or less above the floor may be equipped the same as flat cars.)

(a) *Hand brakes*—(1) *Number*. Same as specified for ''Box and other house cars'' (see § 231.1(a)(1)).

(2) *Dimensions*. Same as specified for ''Box and other house cars'' (see § 231(a)(2)).

(3) *Location*. (i) Each hand brake shall be so located that it can be safely operated while car is in motion.

(ii) The brake shaft shall be located on the end of car to the left of center, or on side of car not more than 36 inches from right-hand end thereof.

(iii) Carriers are not required to change the brakes from right to left side on steel or steel-underframe cars with platform end sills, in service July 1, 1911, except when such appliances are renewed, at which time they must be made to comply with the standards prescribed.

(iv) Carriers are not required to change the location of brake wheels and brake shafts on cars in service July 1, 1911, where the appliances are within 3 inches of the required location, except that when cars undergo regular repairs they must then be made to comply with the standards prescribed.

(4) *Manner of application.* Same as specified for ''Box and other house cars'' (see § 231.1(a)(4)).

(b) *Sill steps.* Same as specified for ''Box and other house cars'' (see § 231.1(d)).

(c) *Side handholds*—(1) *Number.* Same as specified for ''Box and other house cars'' (see § 231.1(h)(1)).

(2) *Dimensions.* Same as specified for ''Box and other house cars'' (see § 231.1(h)(2)).

(3) *Location.* (i) Horizontal, one on face of each side sill near each end. Clearance of outer end of handhold shall be not more than 12 inches from end of car.

(ii) Carriers are not required to change the location of handholds on cars in service July 1, 1911, except end handholds under end sills, where the appliances are within 3 inches of the required location, except that when cars undergo regular repairs they must then be made to comply with the standards prescribed.

(4) *Manner of application.* Same as specified for ''Box and other house cars'' (see § 231.1(h)(4)).

(d) *End handholds*—(1) *Number.* Four.

(2) *Dimensions.* Same as specified for ''Box and other house cars'' (see § 231.1(i)(2)).

(3) *Location.* (i) Horizontal, one near each side of each end of car on face of end sill. Clearance of outer end of handhold shall be not more than 16 inches from side of car.

(ii) Carriers are not required to change the location of handholds on cars in service July 1, 1911, except end handholds under end sills, where the appliances are within 3 inches of the required location, except that when cars undergo regular repairs they must then be made to comply with the standards prescribed.

(4) *Manner of application.* Same as specified for ''Box and other house cars'' (see § 231.1(i)(4)).

(e) *Uncoupling levers.* Same as specified for ''Box and other house cars'' (see § 231.1(k)).

§ 231.7 Tank cars with side platforms.

(a) *Hand brakes*—(1) *Number.* Same as specified for ''Box and other house cars'' (see § 231.1(a)(1)).

(2) *Dimensions.* Same as specified for ''Box and other house cars'' (see § 231.1(a)(2)).

(3) *Location.* (i) Each hand brake shall be so located that it can be safely operated while car is in motion.

(ii) The brake shaft shall be located on end of car to the left of center.

(iii) Carriers are not required to change the brakes from right to left side on steel or steel-underframe cars with platform end sills in service July 1, 1911, except when such appliances are renewed, at which time they must be made to comply with the standards prescribed.

(4) *Manner of application.* Same as specified for ''Box and other house cars'' (see § 231.1(a)(4)).

(b) *Sill steps.* Same as specified for ''Box and other house cars'' (see § 231.1(d)).

(c) *Side handholds*—(1) *Number.* Four or more.

(2) *Dimensions.* Same as specified for ''Box and other house cars'' (see § 231.1(h)(2)).

(3) *Location.* (i) Horizontal, one on face of each side sill near each end. Clearance of outer end of handhold shall be not more than 12 inches from end of car.

(ii) If side safety railings are attached to tank or tank bands, four additional vertical handholds shall be applied, one as nearly as possible over each sill step and securely fastened to tank or tankband.

(iii) Carriers are not required to change the location of handholds on cars in service July 1, 1911, except end handholds under end sills, where the appliances are within 3 inches of the required location, except that when cars undergo regular repairs they must then be made to comply with the standards prescribed.

(4) *Manner of application.* Same as specified for ''Box and other house cars'' (see § 231.1(h)(4)).

(d) *End handholds*—(1) *Number.* Four.

(2) *Dimensions*. Same as specified for ''Box and other house cars'' (see § 231.1(i)(2)).

(3) *Location*. (i) Horizontal, one near each side of each end of car on face of end sill. Clearance of outer end of handhold shall be not more than 16 inches from side of car.

(ii) Carriers are not required to change the location of handholds on cars in service July 1, 1911, except end handholds under end sills, where the appliances are within 3 inches of the required location, except that when cars undergo regular repairs they must then be made to comply with the standards prescribed.

(4) *Manner of application*. Same as specified for ''Box and other house cars'' (see § 231.1(i)(4)).

(e) *Tank-head handholds*—(1) *Number*. Two. (Not required if safety railing runs around ends of tank.)

(2) *Dimensions*. Minimum diameter, five-eighths of an inch, wrought iron or steel. Minimum clearance, 2, preferably 2½, inches. Clear length of handholds shall extend to within 6 inches of outer diameter of tank at point of application.

(3) *Location*. (i) Horizontal, one across each head of tank not less than 30 nor more than 60 inches above platform.

(ii) Carriers are not required to change the location of handholds on cars in service July 1, 1911, except end handholds under end sills, where the appliances are within 3 inches of the required location, except that when cars undergo regular repairs they must then be made to comply with the standards prescribed.

(4) *Manner of application*. Tankhead handholds shall be securely fastened.

(f) *Safety railings*—(1) *Number*. One continuous safety railing running around sides and ends of tank, securely fastened to tank or tank bands at ends and sides of tank; or two running full length of tank at sides of cars supported by posts.

(2) *Dimensions*. Not less than three-fourths of an inch, iron.

(3) *Location*. Running full length of tank either at side supported by posts or securely fastened to tank or tank bands, not less than 30 nor more than 60 inches above platform.

(4) *Manner of application*. Safety railings shall be securely fastened to tank body, tank bands, or posts.

(g) *Uncoupling levers*. Same as specified for ''Box and other house cars'' (see § 231.1(k)).

(h) *End-ladder clearance*. (1) No part of car above end sills within 30 inches from side of car, except buffer block, brake shaft, brake-shaft brackets, brake wheel or uncoupling level shall extend to within 12 inches of a vertical plane parallel with end of car and passing through the inside face of knuckle when closed with coupler horn against the buffer block or end sill, and no other part of end of car or fixtures on same above end sills, other than exceptions noted in this subparagraph, shall extend beyond the outer face of buffer block.

(2) Carriers are not required to make changes to secure additional end-ladder clearance on cars in service July 1, 1911, that have 10 or more inches end-ladder clearance, within 30 inches of side of car, until car is shopped for work amounting to practically rebuilding body of car, at which time they must be made to comply with the standards prescribed.

§ 231.8 Tank cars without side sills and tank cars with short side sills and end platforms.

(a) *Hand brakes*—(1) *Number*. Same as specified for ''Box and other house cars'' (see § 231.1(a)(1)).

(2) *Dimensions*. Same as specified for ''Box and other house cars'' (see § 231.1(a)(2)).

(3) *Location*. (i) Each hand brake shall be so located that it can be safely operated while car is in motion.

(ii) The brake shaft shall be located on end of car to the left of center.

(iii) Carriers are not required to change the brakes from right to left side on steel or steel-underframe cars with platform end sills, in service July 1, 1911, except when such appliances are renewed, at which time they must be made to comply with the standards prescribed.

(4) *Manner of application*. Same as specified for ''Box and other house cars'' (see § 231.1(a)(4)).

(b) *Running boards*—(1) *Number*. One continuous running board around sides

and ends; or two running full length of tank, one on each side.

(2) *Dimensions*. Minimum width on sides, 10 inches. Minimum width on ends, 6 inches.

(3) *Location*. Continuous around sides and ends of cars. On tank cars having end platforms extending to bolsters, running boards shall extend from center to center of bolsters, one on each side.

(4) *Manner of application*. (i) If side running boards are applied below center of tank, outside edge of running boards shall extend not less than 7 inches beyond bulge of tank.

(ii) The running boards at ends of car shall be not less than 6 inches from a point vertically above the inside face of knuckle when closed with coupler horn against the buffer block, end sill or back stop.

(iii) Running boards shall be securely fastened to tank or tank bands.

(c) *Sill steps*—(1) *Number*. Same as specified for ''Box and other house cars'' (see §231.1(d)(1)).

(2) *Dimensions*. Same as specified for ''Box and other house cars'' (see §231.1(d)(2)).

(3) *Location*. (i) One near each end on each side under side handhold.

(ii) Outside edge of tread of step shall be not more than 4 inches inside of face of side of car, preferably flush with side of car.

(iii) Tread shall be not more than 24, preferably not more than 22, inches above the top of rail.

(iv) Carriers are not required to change the location of sill steps on cars in service July 1, 1911, where the appliances are within 3 inches of the required location, except that when cars undergo regular repairs they must then be made to comply with the standards prescribed in said order.

(4) *Manner of application*. Same as specified for ''Box and other house cars'' (see §231.1(d)(4)).

(d) *Ladders*. (If running boards are so located as to make ladders necessary.)

(1) *Number*. Two on cars with continuous running boards. Four on cars with side running boards.

(2) *Dimensions*. (i) Minimum clear length of tread, 10 inches. Maximum spacing of treads, 19 inches. Hardwood treads, minimum dimensions, 1½ by 2 inches.

(ii) Wrought iron or steel treads, minimum diameter five-eighths of an inch. Minimum clearance, 2, preferably 2½, inches.

(3) *Location*. On cars with continuous running boards, one at right end of each side. On cars with side running boards, one at each end of each running board.

(4) *Manner of application*. Ladders shall be securely fastened with not less than ½-inch bolts or rivets.

(e) *Side handholds*—(1) *Number*. Four or more.

(2) *Dimensions*. Same as specified for ''Box and other house cars'' (see §231.1(h)(2)).

(3) *Location*. (i) Horizontal, one on face of each side sill near each end on tank cars with short side sills, or one attached to top of running board projecting outward above sill steps or ladders on tank cars without side sills. Clearance of outer end of handhold shall be not more than 12 inches from end of car.

(ii) If side safety railings are attached to tank or tank bands four additional vertical handholds shall be applied, one as nearly as possible over each sill step and securely fastened to tank or tank bands.

(iii) Carriers are not required to change the location of handholds on cars in service July 1, 1911, except end handholds under end sills, where the appliances are within 3 inches of the required location, except that when cars undergo regular repairs they must then be made to comply with the standards prescribed.

(4) *Manner of application*. Same as specified for ''Box and other house cars'' (see §231.1(h)(4)).

(f) *End handholds*—(1) *Number*. Four.

(2) *Dimensions*. Same as specified for ''Box and other house cars'' (see §231.1(i)(2)).

(3) *Location*. (i) Horizontal, one near each side of each end of car on face of end sill. Clearance of outer end of handhold shall be not more than 16 inches from side of car.

(ii) Carriers are not required to change the location of handholds on cars in service July 1, 1911, except end handholds under end sills, where the

appliances are within 3 inches of the required location, except that when cars undergo regular repairs they must then be made to comply with the standards prescribed.

(4) *Manner of application.* Same as specified for ''Box and other house cars'' (see § 231.1(i)(4)).

(g) *Tank-head handholds*—(1) *Number.* Two. (Not required if safety railing runs around ends of tank.)

(2) *Dimensions.* Minimum diameter, five-eighths of an inch, wrought iron or steel. Minimum clearance, 2, preferably 2½, inches.

(3) *Location.* (i) Horizontal, one across each head of tank not less than 30 nor more than 60 inches above platform on running board. Clear length of handholds shall extend to within 6 inches of outer diameter of tank at point of application.

(ii) Carriers are not required to change the location of handholds on cars in service July 7, 1911, except end handholds under end sills, where the appliances are within 3 inches of the required location, except that when cars undergo regular repairs they must then be made to comply with the standards prescribed.

(4) *Manner of application.* Tankhead handholds shall be securely fastened.

(h) *Safety railings*—(1) *Number.* One running around sides and ends of tank or two running full length of tank.

(2) *Dimensions.* Minimum diameter, seven-eighths of an inch, wrought iron or steel. Minimum clearance, 2½ inches.

(3) *Location.* Running full length of tank, not less than 30 nor more than 60 inches above platform or running board.

(4) *Manner of application.* Safety railings shall be securely fastened to tank or tank bands and secured against end shifting.

(i) *Uncoupling levers.* Same as specified for ''Box and other house cars'' (see § 231.1(k)).

(j) *End-ladder clearance.* (1) No part of car above end sills within 30 inches from side of car, except buffer block, brake shaft, brake-shaft brackets, brake wheel, running boards or uncoupling lever shall extend to within 12 inches of a vertical plane parallel with end of car and passing through the inside face of knuckle when closed with coupler horn against the buffer block or end sill, and no other part of end of car or fixtures on same, above end sills, other than exceptions herein noted, shall extend beyond the outer face of buffer block.

(2) Carriers are not required to make changes to secure additional end-ladder clearance on cars in service July 1, 1911, that have 10 or more inches end-ladder clearance, within 30 inches of side of car, until car is shopped for work amounting to practically rebuilding body of car, at which time they must be made to comply with the standards prescribed.

§ 231.9 Tank cars without end sills.

(a) *Hand brakes*—(1) *Number.* Same as specified for ''Box and other house cars'' (see § 231.1(a)(1)).

(2) *Dimensions.* Same as specified for ''Box and other house cars'' (see § 231.1(a)(2)).

(3) *Location.* Each hand brake shall be so located that it can be safely operated while car is in motion. The brake shaft shall be located on end of car to the left of center.

(4) *Manner of application.* Same as specified for ''Box and other house cars'' (see § 231.1(a)(4)).

(b) *Brake step.* Same as specified for ''Box and other house cars'' (see § 231.1(b)).

(c) *Running boards*—(1) *Number.* One.

(2) *Dimensions.* Minimum width on sides, 10 inches. Minimum width on ends, 6 inches.

(3) *Location.* Continuous around sides and ends of tank.

(4) *Manner of application.* (i) If running boards are applied below center of tank, outside edge of running boards shall extend not less than 7 inches beyond bulge of tank.

(ii) Running boards at ends of car shall be not less than 6 inches from a point vertically above the inside face of knuckle when closed with coupler horn against the buffer block, end sill or back stop.

(iii) Running boards shall be securely fastened to tank or tank bands.

(d) *Sill steps*—(1) *Number.* Four. (If tank has high running boards, making ladders necessary, sill steps must meet ladder requirements.)

(2) *Dimensions.* Same as specified for ''Box and other house cars'' (see §231.1(d)(2)).

(3) *Location.* (i) One near each end on each side, flush with outside edge of running board as near end of car as practicable.

(ii) Tread not more than 24, preferably not more than 22, inches above the top of rail.

(iii) Carriers are not required to change the location of handholds on cars in service July 1, 1911, where the appliances are within 3 inches of the required location, except that when cars undergo regular repairs they must then be made to comply with the standards prescribed.

(4) *Manner of application.* (i) Steps exceeding 18 inches in depth shall have an additional tread and be laterally braced.

(ii) Sill steps shall be securely fastened with not less than ½-inch bolts with nuts outside (when possible) and, riveted over, or with ½-inch rivets.

(e) *Side handholds*—(1) *Number.* Four or more.

(2) *Dimensions.* Same as specified for ''Box and other house cars'' (see §231.1(h)(2)).

(3) Location. (i) *Horizontal,* one near each end on each side of car over sill step on running board, not more than 2 inches back from outside edge of running board, projecting downward or outward.

(ii) Where such side handholds are more than 18 inches from end of car, an additional handhold must be placed near each end on each side not more than 30 inches above center line of coupler.

(iii) Clearance of outer end of handhold shall be not more than 12 inches from end of car.

(iv) If safety railings are on tank, four additional vertical handholds shall be applied, one over each sill step on tank.

(v) Carriers are not required to change the location of handholds on cars in service July 1, 1911, except end handholds under end sills, where the appliances are within 3 inches of the required location, except that when cars undergo regular repairs they must then be made to comply with the standards prescribed.

(4) *Manner of application.* Same as specified for ''Box and other house cars'' (see §231.1(h)(4)).

(f) *End handholds*—(1) *Number.* Four.

(2) *Dimensions.* Same as specified for ''Box and other house cars'' (see §231.1(i)(2)).

(3) *Location.* (i) Horizontal, one near each side on each end of car on running board, not more than 2 inches back from edge of running board projecting downward or outward, or on end of tank not more than 30 inches above center line of coupler.

(ii) Carriers are not required to change the location of handholds on cars in service July 1, 1911, except end handholds under end sills, where the appliances are within 3 inches of the required location, except that when cars undergo regular repairs they must then be made to comply with the standards prescribed.

(4) *Manner of application.* Same as specified for ''Box and other house cars'' (see §231.1(i)(4)).

(g) *Safety railings*—(1) *Number.* One.

(2) *Dimensions.* Minimum diameter, seven-eighths of an inch, wrought iron or steel. Minimum clearance, 2½ inches.

(3) *Location.* Safety railings shall be continuous around sides and ends of car, not less than 30 nor more than 60 inches above running board.

(4) *Manner of application.* Safety railings shall be securely fastened to tank or tank bands, and secured against end shifting.

(h) *Uncoupling levers*—(1) *Number.* Same as specified for ''Box and other house cars'' (see §231.1(k)(1)).

(2) *Dimensions.* Same as specified for ''Box and other house cars'' (see §231.1(k)(2)), except that minimum length of uncoupling lever shall be 42 inches, measured from center line of end of car to handle of lever.

(3) *Location.* Same as specified for ''Box and other house cars'' (see §231.1(k)(3)), except that uncoupling lever shall be not more than 30 inches above center line of coupler.

(i) *End-ladder clearance.* (1) No part of car above buffer block within 30 inches from side of car, except brake shaft, brake-shaft brackets, brake wheel or uncoupling lever shall extend to within 12 inches of a vertical plane parallel

with end of car and passing through the inside face of knuckle when closed with coupler horn against the buffer block or back stop, and no other part of end of car or fixtures on same, above buffer block, other than exceptions herein noted, shall extend beyond the face of buffer block.

(2) Carriers are not required to make changes to secure additional end-ladder clearance on cars in service July 1, 1911, that have 10 or more inches end-ladder clearance, within 30 inches of side of car, until car is shopped for work amounting to practically rebuilding body of car, at which time they must be made to comply with the standards prescribed.

§ 231.10 Caboose cars with platforms.

NOTE: a. The term ''bottom of car'' as used in § 231.10 is construed to mean ''bottom of side-sill or sheathing over side-sill.''

b. The term ''corner of car'' as used in § 231.10 is construed to mean the ''line at inner edge of platform formed by the intersection of the side and end of car.''

(a) *Hand brakes*—(1) *Number*. (i) Each caboose car shall be equipped with an efficient hand brake which shall operate in harmony with the power brake thereon.

(ii) The hand brake may be of any efficient design, but must provide the same degree of safety as the design shown on plate A.

(2) *Dimensions*. Same as specified for ''Box and other house cars'' (see § 231.1(a)(2)).

(3) *Location*. (i) Each hand brake shall be so located that it can be safely operated while car is in motion.

(ii) The brake shaft on caboose cars with platforms shall be located on platform to the left of center.

(iii) Carriers are not required to change the brakes from right to left side on steel or steel-underframe cars with platform end sills, in service July 1, 1911, except when such appliances are renewed, at which time they must be made to comply with the standards prescribed.

(4) *Manner of application*. Same as specified for ''Box and other house cars'' (see § 231.1(a)(4)).

(b) *Running boards*—(1) *Number*. One longitudinal running board.

(2) *Dimensions*. Same as specified for ''Box and other house cars'' (see § 231.1(c)(2)).

(3) *Location*. (i) Full length of car, center of roof. (On caboose cars with cupolas, longitudinal running boards shall extend from cupola to ends of roof.)

(ii) Outside - metal - roof - cars shall have latitudinal extensions leading to ladder locations.

(4) *Manner of application*. Same as specified for ''Box and other house cars'' (see § 231.1(c)(4)). See note below.

(c) *Ladders*—(1) *Number*. Two.

(2) *Dimensions*. None specified.

(3) *Location*. One on each end.

(4) *Manner of application*. Same as (see § 231.1(e)(4)). See note below.

(d) *Roof handholds*—(1) *Number*. One over each ladder. Where stiles of ladders extend 12 inches or more above roof, no other roof handholds are required.

(2) *Dimensions*. Same as specified for ''Box and other house cars'' (see § 231.1(g)(2)).

(3) *Location*. (i) On roof of caboose in line with and running parallel to treads of ladder, not less than 8 nor more than 15 inches from edge of roof.

(ii) Carriers are not required to change the location of handholds on cars in service July 1, 1911, except end handholds under end sills, where the appliances are within 3 inches of the required location, except that when cars undergo regular repairs they must then be made to comply with the standards prescribed.

(4) *Manner of application*. Same as specified for ''Box and other house cars'' (see § 231.1(g)(4)). See note below.

(e) *Cupola handholds*—(1) *Number*. One or more.

(2) *Dimensions*. Minimum diameter, five-eighths of an inch, wrought iron or steel. Minimum clearance, 2, preferably 2½ inches.

(3) *Location*. (i) One continuous handhold extending around top of cupola not more than 3 inches from edge of cupola roof.

(ii) Four right-angle handholds, one at each corner, not less than 16 inches in clear length from point of angle, may take the place of the one continuous handhold specified, if locations coincide.

(iii) Carriers are not required to change the location of handholds on cars in service July 1, 1911, except end handholds under end sills, where the appliances are within 3 inches of the required location, except that when cars undergo regular repairs they must then be made to comply with the standards prescribed.

(4) *Manner of application.* Cupola handholds shall be securely fastened with not less than ½-inch bolts with nuts outside and riveted over or with not less than ½-inch rivets. See note below.

(f) *Side handholds*—(1) *Number.* Four.

(2) *Dimensions.* Minimum diameter, five-eighths of an inch, wrought iron or steel. Minimum clear length, 36 inches. Minimum clearance, 2, preferably 2½, inches.

(3) *Location.* (i) One near each end on each side of car, curving downward toward center of car from a point not less than 30 inches above platform to a point not more than 8 inches from bottom of car. Top end of handhold shall be not more than 8 inches from outside face of end sheathing.

(ii) Carriers are not required to change the location of handholds on cars in service July 1, 1911, except end handholds under end sills, where the appliances are within 3 inches of the required location, except that when cars undergo regular repairs they must then be made to comply with the standards prescribed.

(4) *Manner of application.* Same as specified for ''Box and other house cars'' (see § 231.1(h)(4)).

(g) *End handholds*—(1) *Number.* Four.

(2) *Dimensions.* Same as specified for ''Box and other house cars'' (see § 231.1(i)(2)).

(3) *Location.* (i) Horizontal, one near each side on each end of car on face of platform end sill. Clearance of outer end of handhold shall be not more than 16 inches from end of platform end sill.

(ii) Carriers are not required to change the location of handholds on cars in service July 1, 1911, except end handholds under end sills, where the appliances are within 3 inches of the required location, except that when cars undergo regular repairs they must then be made to comply with the standards prescribed.

(4) *Manner of application.* Same as specified for ''Box and other house cars'' (see § 231.1(i)(4)).

(h) *End-platform handholds*—(1) *Number.* Four.

(2) *Dimensions.* Minimum diameter, five-eighths of an inch, wrought iron or steel. Minimum clearance, 2, preferably 2½ inches.

(3) *Location.* (i) One right-angle handhold on each side of each end extending horizontally from door post to corner of car at approximate height of platform rail, then downward to within 12 inches of bottom of car.

(ii) Carriers are not required to change the location of handholds on cars in service July 1, 1911, except end handholds under end sills, where the appliances are within 3 inches of the required location, except that when cars undergo regular repairs they must then be made to comply with the standards prescribed.

(4) *Manner of application.* Handholds shall be securely fastened with bolts, screws, or rivets.

(i) *Caboose-platform steps.* Safe and suitable box steps leading to caboose platforms shall be provided at each corner of caboose. Lower tread of step shall be not more than 24 inches above top of rail.

(j) *Uncoupling levers.* Same as specified for ''Box and other house cars'' (see § 231.1(k)).

NOTE: Running boards may be omitted from Caboose Cars with platforms built after June 1, 1970, when each of the following conditions have been met:

(1) That ladders, roof handholds (including ladder extensions) and cupola handholds as specified in paragraphs (c), (d), and (e) of this § 231.10 are also omitted.

(2) That an appropriate notice be posted in protective manner or stenciled on interior of caboose stating ''operating employees are prohibited under all conditions from occupying the roof of this caboose.''

(3) That a safe means must be provided to assure the safety of an operating employee when required to clean or maintain windows of a caboose without running boards.

(4) That the following additional safety appliances as specified be securely installed at the outer edge of each platform:

(a) Safety railing

(i) Number:

Horizontal—Four (4), two (2) upper and two (2) lower.

Vertical—Four (4).

(ii) Dimensions:

Minimum diameter—One (1) inch wrought iron, steel, or other material of equivalent strength.

Minimum clearance—Four (4), preferably six (6) inches except at brace and fastening locations.

(iii) Location:

Vertical—One (1) at each corner of car extending from platform end sill to level of lower horizontal safety railing or to suitable bracket at roof.

Horizontal—Upper: Across each end of car near outer edge securely braced with vertical supports not less than 48 nor more than 54 inches above top of platform extending not less than full width of platform excluding hand brake stanchion area.

Horizontal—Lower: Across each end of car near outer edge securely braced with vertical supports not less than 36 nor more than 42 inches above top of platform excluding hand brake stanchion area. An opening may be provided near center. Such opening shall be provided with a secure safety chain(s) not less than ¼-inch diameter wrought iron, or steel, or other secure suitable closure.

(iv) Manner of application:

Safety railing shall be securely fastened with ½-inch bolts or rivets when possible and securely supported. A weld at connection of vertical and horizontal safety railing and vertical supports is permissible when those appliances are fabricated as a single unit.

(b) Kick plates

(i) Number: Four (4).

(ii) Dimensions:

Minimum thickness 10-gauge wrought iron, steel or other material of equivalent strength.

Width—Minimum 24 inches.

Height—Minimum 24 inches.

(iii) Location: One near each side on each and. Outer edge not more than 12 inches from adjacent vertical safety railing with bottom edge near top of platform. Hand brake stand may serve as part of kick plate.

(iv) Manner of application: Securely fastened by ½-inch bolts or rivets, or weld.

(v) Vertical hand rail supports spaced not more than eighteen (18) inches apart may be used in lieu of kick plates.

(5) That stove pipe shall be secured to prevent turning.

(6) That windows shall be laminated safety-type glass or equivalent.

Existing caboose cars with platforms. Running boards may be removed from Caboose Cars with Platforms built or under construction on or before June 1, 1970, when each of the following conditions have been met:

(1) That ladder treads above safety railing, roof handholds including ladder extensions, and cupola handholds specified in paragraphs (c), (d), and (e) of this § 231.10 are removed.

(2) That an appropriate notice be posted in protective manner or stenciled in interior of caboose stating ''operating employees are prohibited under all conditions from occupying the roof of this caboose.''

(3) That a safe means must be provided to assure the safety of an operating employee when required to clean or maintain windows of a caboose without running boards.

(4) That end platform safety railing and handhold arrangement will be deemed to meet requirements except as to upper safety railing and kick plates, when those appliances are not provided. When vertical supports are not more than twenty-four (24) inches apart, such supports may be used in lieu of kick plates.

(5) That the following additional safety appliances (when not so provided) shall be securely installed at outer edge of each platform:

(a) Safety railing.

(i) Number:

Horizontal upper—Two (2).

(ii) Dimensions:

Minimum diameter—One (1) inch wrought iron, steel, or other material of equivalent strength.

Minimum clearance—Four (4), preferably six (6) inches except at brace and fastening locations.

(iii) Location:

Horizontal—Upper: Across each end of car near outer edge securely braced with vertical supports not less than 48 nor more than 54 inches above top of platform extending not less than full width of platform excluding hand brake stanchion area. Ladder tread not more than two (2) inches below level of upper safety railing may serve as a portion of said safety railing.

(b) Kick plates or vertical supports—Same as provided for caboose cars with platforms built after June 1, 1970, this note. See above.

(6) That stove pipe should be secured to prevent turning.

(7) Cupola or bay windows shall be laminated safety-type glass or equivalent and all other caboose windows shall be so provided on or before June 1, 1975.

[33 FR 19663, Dec. 25, 1968, as amended at 35 FR 10149, June 20, 1970]

§ 231.11 Caboose cars without platforms.

(a) *Hand brakes*—(1) *Number*. Same as specified for ''Box and other house cars'' (see § 231.1(a)(1)).

(2) *Dimensions*. Same as specified for ''Box and other house cars'' (see § 231.1(a)(2)).

(3) *Location*. (i) Each hand brake shall be so located that it can be safely operated while car is in motion.

(ii) The brake shaft on caboose cars without platforms shall be located on end of car to the left of center.

(iii) Carriers are not required to change the brakes from right to left side on steel or steel-underframe cars with platform end sills, in service July 1, 1911, except when such appliances are renewed, at which time they must be made to comply with the standards prescribed.

(4) *Manner of application*. Same as specified for ''Box and other house cars'' (see § 231.1(a)(4)).

(b) *Brake step*. Same as specified for ''Box and other house cars'' (see § 231.1(b)).

(c) *Running boards*—(1) *Number*. Same as specified for ''Box and other house cars'' (see § 231.1(c)(1)).

(2) *Dimension*. Same as specified for ''Box and other house cars'' (see § 231.1(c)(2)).

(3) *Location*. (i) Full length of car, center of roof. (On caboose cars with cupolas, longitudinal running boards shall extend from cupola to ends of roof.)

(ii) Outside-metal-roof cars shall have latitudinal extensions leading to ladder locations.

(4) *Manner of application*. Same as specified for ''Box and other house cars'' (see § 231.1(c)(4)).

(d) *Sill steps*. Same as specified for ''Box and other house cars'' (see § 231.1(d)).

(e) *Side-door steps*—(1) *Number*. Two. (If caboose has side doors.)

(2) *Dimensions*. Minimum length, 5 feet. Minimum width, 6 inches. Minimum thickness of tread, 1½ inches. Minimum height of back stop, 3 inches. Maximum height from top of rail to top of tread, 24 inches.

(3) *Location*. One under each side door.

(4) *Manner of application*. Side-door steps shall be supported by 2 iron brackets having a minimum cross-sectional area ⅞ by 3 inches or equivalent, each of which shall be securely fastened to car by not less than two ¾-inch bolts.

(f) *Ladders*—(1) *Number*. Four.

(2) *Dimensions*. Same as specified for ''Box and other house cars'' (see § 231.1(e)(2)).

(3) *Location*. Same as specified for ''Box and other house cars'' (see § 231.1(e)(3), except when caboose has side doors, then side ladders shall be located not more than 8 inches from doors.

(4) *Manner of application*. Same as specified for ''Box and other house cars'' (see § 231.1(e)(4)).

(g) *End-ladder clearance*. (1) No part of car above end sills within 30 inches from side of car, except buffer block, brake shaft, brake wheel, brake step, running board, or uncoupling lever shall extend to within 12 inches of a vertical plane, parallel with end of car and passing through the inside face of knuckle when closed with coupler horn against the buffer block or end sill, and no other part of end of car or fixtures on same above end sills, other than exceptions noted in this subparagraph, shall extend beyond the outer face of buffer block.

(2) Carriers are not required to make changes to secure additional end-ladder clearance on cars in service July 1, 1911, that have 10 or more inches end-ladder clearance, within 30 inches of side of car, until car is shopped for work amounting to practically rebuilding body of car, at which time they must be made to comply with the standards prescribed.

(h) *Roof handholds*—(1) *Number*. Four.

(2) *Dimensions*. Same as specified for ''Box and other house cars'' (see § 231.1(g)(2)).

(3) *Location*. (i) One over each ladder, on roof in line with and running parallel to treads of ladder, not less than 8 nor more than 15 inches from edge of roof.

(ii) Where stiles of ladders extend 12 inches or more above roof, no other roof handholds are required.

(iii) Carriers are not required to change the location of handholds on cars in service July 1, 1911, except end handholds under end sills, where the appliances are within 3 inches of the required location, except that when cars undergo regular repairs they must then be made to comply with the standards prescribed.

(4) *Manner of application*. Roof handholds shall be securely fastened with not less than ½-inch bolts with

nuts outside (when possible) and riveted over, or with not less than ½-inch rivets.

(i) *Cupola handholds*—(1) *Number*. One or more.

(2) *Dimensions*. Minimum diameter, five-eights of an inch, wrought iron or steel. Minimum clearance, 2, preferably 2½ inches.

(3) *Location*. (i) One continuous cupola handhold extending around top of cupola, not more than 3 inches from edge of cupola roof.

(ii) Four right-angle handholds, one at each corner, not less than 16 inches in clear length from point of angle, may take the place of the one continuous handhold specified, if locations coincide.

(iii) Carriers are not required to change the location of handholds on cars in service July 1, 1911, except end handholds under end sills, where the appliances are within 3 inches of the required location, except that when cars undergo regular repairs they must then be made to comply with the standards prescribed.

(4) *Manner of application*. Cupola handholds shall be securely fastened with not less than ½-inch bolts with nuts outside and riveted over or with not less than ½-inch rivets.

(j) *Side handholds*—(1) *Number*. Four.

(2) *Dimensions*. Same as specified for ''Box and other house cars'' (see § 231.1(h)(2)).

(3) *Location*. (i) Horizontal, one near each end on each side of car, not less than 24 nor more than 30 inches above center line of coupler. Clearance of outer end of handhold shall be not more than 8 inches from end of car.

(ii) Carriers are not required to change the location of handholds on cars in service July 1, 1911, except end handholds under end sills where the appliances are within 3 inches of the required location, except that when cars undergo regular repairs they must then be made to comply with the standards prescribed.

(4) *Manner of application*. Same as specified for ''Box and other house cars'' (see § 231.(h)(4)).

(k) *Side-door handholds*—(1) *Number*. Four: Two curved, two straight.

(2) *Dimensions*. Minimum diameter, five-eighths of an inch, wrought iron or steel. Minimum clearance, 2, preferably 2½ inches.

(3) *Location*. (i) One curved handhold, from a point at side of each door opposite ladder, not less than 36 inches above bottom of car, curving away from door downward to a point not more than 6 inches above bottom of car.

(ii) One vertical handhold at ladder side of each door from a point not less than 36 inches above bottom of car to a point not more than 6 inches above level of bottom of door.

(iii) Carriers are not required to change the location of handholds on cars in service July 1, 1911, except end handholds under end sills, where the appliances are within 3 inches of the required location, except that when cars undergo regular repairs they must then be made to comply with the standards prescribed.

(4) *Manner of application*. Side-door handholds shall be securely fastened with not less than ½-inch bolts with nuts outside (when possible) and riveted over or with not less than ½-inch rivets.

(l) *Horizontal end handholds*—(1) *Number*. Same as specified for ''Box and other house cars.'' (See § 231.1(i)(1)).

(2) *Dimensions*. Same as specified for ''Box and other house cars.'' (see § 231.1(i)(2)).

(3) *Location*. (i) Same as specified for ''Box and other house cars'' (see § 231.1(i)(3)), except that one additional end handhold shall be on each end of cars with platform end sills as heretofore described, unless car has door in center of end. Said handhold shall be not less than 24 inches in length, located near center of car, not less than 30 nor more than 60 inches above platform end sill.

(ii) Carriers are not required to change the location of handholds on cars in service July 1, 1911, except end handholds under end sills, where the appliances are within 3 inches of the required location, except that when cars undergo regular repairs they must then be made to comply with the standards prescribed in said order.

(4) *Manner of application*. Same as specified for ''Box and other house cars'' (see § 231.1(i)(4)).

(m) *Vertical end handholds*. Same as specified for ''Box and other house cars'' (see § 231.1(j)).

(n) *Uncoupling levers*. Same as specified for ''Box and other house cars'' (see § 231.1(k)).

§ 231.12 Passenger-train cars with wide vestibules.

(a) *Hand brakes*—(1) *Number*. Each passenger-train car shall be equipped with an efficient hand brake, which shall operate in harmony with the power brake thereon.

(2) *Location*. Each hand brake shall be so located that it can be safely operated while car is in motion.

(b) *Side handholds*—(1) *Number*. Eight.

(2) *Dimensions*. Minimum diameter, five-eighths of an inch, metal. Minimum clear length, 16 inches. Minimum clearance, 1¼, preferably 1½ inches.

(3) *Location*. Vertical, one on each vestibule door post.

(4) *Manner of application*. Side handholds shall be securely fastened with bolts, rivets, or screws.

(c) *End handholds*—(1) *Number*. Four.

(2) *Dimensions*. (i) Minimum diameters, five-eighths of an inch, wrought iron or steel. Minimum clear length, 16 inches. Minimum clearance, 2, preferably 2½ inches.

(ii) Handholds shall be flush with or project not more than 1 inch beyond vestibule face.

(3) *Location*. Horizontal, one near each side on each end projecting downward from face of vestibule end sill. Clearance of outer end of handhold shall be not more than 16 inches from side of car.

(4) *Manner of application*. End handholds shall be securely fastened with bolts or rivets. When marker sockets or brackets are located so that they can not be conveniently reached from platforms, suitable steps and handholds shall be provided for men to reach such sockets or brackets.

(d) *Uncoupling levers*. (1) Uncoupling attachments shall be applied so they can be operated by a person standing on the ground.

(2) Minimum length of ground uncoupling attachment, 42 inches, measured from center line of end of car to handle of attachment.

(3) On passenger-train cars used in freight or mixed-train service, the uncoupling attachment shall be so applied that the coupler can be operated from left side of car.

§ 231.13 Passenger-train cars with open-end platforms.

(a) *Hand brakes*—(1) *Number*. Each passenger-train car shall be equipped with an efficient hand brake, which shall operate in harmony with the power brake thereon.

(2) *Location*. Each hand brake shall be so located that it can be safely operated while car is in motion.

(b) *End handholds*—(1) *Number*. Four.

(2) *Dimensions*. Minimum diameter, five-eighths of an inch, wrought iron or steel. Minimum clear length, 16 inches. Minimum clearance, 2, preferably 2½ inches. Handholds shall be flush with or project not more than 1 inch beyond surface of end sill.

(3) *Location*. Horizontal, one near each side of each end on face of platform end sill, projecting downward. Clearance of outer end of handhold shall be not more than 16 inches from end of end sill.

(4) *Manner of application*. End-handholds shall be securely fastened with bolts or rivets.

(c) *End-platform handholds*—(1) *Number*. Four. (Cars equipped with safety gates do not require end-platform handholds.)

(2) *Dimensions*. Minimum clearance, 2, preferably 2½ inches, metal.

(3) *Location*. Horizontal from or near door post to a point not more than 12 inches from corner of car, then approximately vertical to a point not more than 6 inches from top of platform. Horizontal portion shall be not less than 24 inches in length nor more than 40 inches above platform.

(4) *Manner of application*. End-platform handholds shall be securely fastened with bolts, rivets, or screws.

(d) *Uncoupling levers*. (1) Uncoupling attachments shall be applied so they can be operated by a person standing on the ground.

(2) Minimum length of ground uncoupling attachment, 42 inches, measured from center of end of car to handle of attachment.

(3) On passenger-train cars used in freight or mixed-train service the uncoupling attachments shall be so applied that the coupler can be operated from left side of car.

§ 231.14 Passenger-train cars without end platforms.

(a) *Handbrakes*—(1) *Number*. Each passenger-train car shall be equipped with an efficient hand brake which shall operate in harmony with the power brake thereon.

(2) *Location*. Each hand brake shall be so located that it can be safely operated while car is in motion.

(b) *Sill steps*—(1) *Number*. Four.

(2) *Dimensions*. Minimum length of tread, 10, preferably 12, inches. Minimum cross-sectional area, ½ by 1½ inches or equivalent, wrought iron or steel. Minimum clear depth, 8 inches.

(3) *Location*. (i) One near each end on each side not more than 24 inches from corner of car to center of tread of sill step.

(ii) Outside edge of tread of step shall be not more than 2 inches inside of face of side of car.

(iii) Tread shall be not more than 24, preferably not more than 22, inches above the top of rail.

(4) *Manner of application*. (i) Steps exceeding 18 inches in depth shall have an additional tread and be laterally braced.

(ii) Sill steps shall be securely fastened with not less than ½-inch bolts with nuts outside (when possible) and riveted over, or with not less than ½-inch rivets.

(c) *Side handholds*—(1) *Number*. Four.

(2) *Dimensions*. Minimum diameter, five-eighths of an inch, wrought iron or steel. Minimum clear length, 16, preferably 24, inches. Minimum clearance, 2, preferably 2½, inches.

(3) *Location*. Horizontal or vertical, one near each end on each side of car over sill step.

(i) If horizontal, not less than 24 nor more than 30 inches above center line of coupler.

(ii) If vertical, lower end not less than 18 nor more than 24 inches above center line of coupler.

(4) *Manner of application*. Side handholds shall be securely fastened with bolts, rivets or screws.

(d) *End handholds*—(1) *Number*. Four.

(2) *Dimensions*. Minimum diameter, five-eighths of an inch, wrought iron or steel. Minimum clear length, 16 inches. Minimum clearance, 2, preferably 2½, inches.

(3) *Location*. Horizontal, one near each side on each end projecting downward from face of end sill or sheathing. Clearance of outer end of handholds shall be not more than 16 inches from side of car.

(4) *Manner of application*. (i) Handholds shall be flush with or project not more than 1 inch beyond face of end sill.

(ii) End handholds shall be securely fastened with bolts or rivets.

(iii) When marker sockets or brackets are located so that they can not be conveniently reached from platforms, suitable steps and handholds shall be provided for men to reach such sockets or brackets.

(e) *End handrails*. (On cars with projecting end sills.)

(1) *Number*. Four.

(2) *Dimensions*. Minimum diameter, five-eighths of an inch, wrought iron or steel. Minimum clearance, 2, preferably 2½, inches.

(3) *Location*. One on each side of each end, extending horizontally from doorpost or vestibule frame to a point not more than 6 inches from corner of car, then approximately vertical to a point not more than 6 inches from top of platform end sill; horizontal portion shall be not less than 30 nor more than 60 inches above platform end sill.

(4) *Manner of application*. End handrails shall be securely fastened with bolts, rivets or screws.

(f) *Side-door steps*—(1) *Number*. One under each door.

(2) *Dimensions*. Minimum length of tread, 10, preferably 12, inches. Minimum cross-sectional area, ½ by 1½ inches or equivalent, wrought iron or steel. Minimum clear depth, 8 inches.

(3) *Location*. Outside edge of tread of step not more than 2 inches inside of face of side of car. Tread not more than 24, preferably not more than 22, inches above the top of rail.

(4) *Manner of application*. (i) Steps exceeding 18 inches in depth shall have an additional tread and be laterally braced.

(ii) Side-door steps shall be securely fastened with not less than ½-inch bolts with nuts outside (when possible) and riveted over, or with not less than ½-inch rivets.

(iii) A vertical handhold not less than 24 inches in clear length shall be applied above each side-door step on door post.

(g) *Uncoupling levers*. (1) Uncoupling attachments shall be applied so they can be operated by a person standing on the ground.

(2) Minimum length of ground uncoupling attachment, 42 inches, measured from center line of end of car to handle of attachment.

(3) On passenger-train cars used in freight or mixed-train service, the uncoupling attachment shall be so applied that the coupler can be operated from the left side of car.

§ 231.15 Steam locomotives used in road service.

(a) *Tender till-steps*—(1) *Number*. Four on tender.

(2) *Dimensions*. (i) Bottom tread not less than 8 by 12 inches, metal. (May have wooden treads.)

(ii) If stirrup steps are used, clear length of tread shall be not less than 10, preferably 12, inches.

(3) *Location*. One near each corner of tender on sides.

(4) *Manner of application*. Tender sill-steps shall be securely fastened with bolts or rivets.

(b) *Pilot sill-steps*—(1) *Number*. Two.

(2) *Dimensions*. Tread not less than 8 inches in width by 10 inches in length, metal. (May have wooden treads.)

(3) *Location*. One on or near each end of buffer-beam outside of rail and not more than 16 inches above rail.

(4) *Manner of application*. Pilot sill-steps shall be securely fastened with bolts or rivets.

(c) *Pilot-beam handholds*—(1) *Number*. Two.

(2) *Dimensions*. Minimum diameter, five-eighths of an inch, wrought iron or steel. Minimum clear length, 14, preferably 16, inches. Minimum clearance, 2½ inches.

(3) *Location*. One on each end of buffer-beam. If uncoupling lever extends across front end of locomotive to within 8 inches of end of buffer-beam, and is seven-eighths of an inch or more in diameter, securely fastened, with a clearance of 2½ inches, it is a handhold.)

(4) *Manner of application*. Pilot-beam handholds shall be securely fastened with bolts or rivets.

(d) *Side handholds*—(1) *Number*. Six.

(2) *Dimensions*. Minimum diameter, if horizontal, five-eighths of an inch; if vertical, seven-eighths of an inch, wrought iron or steel. Horizontal, minimum clear length, 16 inches. Vertical, clear length equal to approximate height of tank. Minimum clearance, 2, preferably 2½, inches.

(3) *Location*. (i) Horizontal or vertical. If vertical, one on each side of tender within 6 inches of rear or on corner; if horizontal, same as specified for ''Box and other house cars'' (see § 231.1(h)(3)).

(ii) One on each side of tender near gangway; 1 on each side of locomotive at gangway; applied vertically.

(4) *Manner of application*. Side handholds shall be securely fastened with not less than ½-inch bolts or rivets.

(e) *Rear-end handholds*—(1) *Number*. Two.

(2) *Dimensions*. Minimum diameter, five-eighths of an inch, wrought iron or steel. Minimum clear length, 14 inches. Minimum clearance, 2, preferably 2½, inches.

(3) *Location*. Horizontal, one near each side of rear end of tender on face of end sill. Clearance of outer end of handhold shall be not more than 16 inches from side of tender.

(4) *Manner of application*. Rear-end handholds shall be securely fastened with not less than ½-inch bolts or rivets.

(f) *Uncoupling levers*—(1) *Number*. Two double levers, operative from either side.

(2) *Dimensions*. Rear-end levers shall extend across end of tender with handles not more than 12, preferably 9, inches from side of tender with a guard bent on handle to give not less than 2 inches clearance around handle.

(3) *Location*. One on rear end of tender and one on front end of locomotive. Handles of front-end leavers shall be not more than 12, preferably 9, inches from ends of buffer-beam, and shall be

so constructed as to give a minimum clearance of 2 inches around handle.

(4) *Manner of application*. Uncoupling levers shall be securely fastened with bolts or rivets.

(g) *Couplers*. Locomotives shall be equipped with automatic couplers at rear of tender and front of locomotive.

§ 231.16 Steam locomotives used in switching service.

(a) *Footboards*—(1) *Number*. Two or more.

(2) *Dimensions*. (i) Minimum width of tread, 10 inches.

(ii) Minimum height of back stop, 4 inches above tread.

(iii) Height from top of rail to top of tread, not more than 12 nor less than 9 inches.

(iv) If made of wood, minimum thickness of tread shall be 1½, preferably 2 inches.

(v) Footboards may be made of material other than wood which provides the same as or a greater degree of safety than wood of 1½ inches thickness. When made of material other than wood, the tread surface shall be of anti-skid design and constructed with sufficient open space to permit the elimination of snow and ice from the tread surface.

(3) *Location*. Ends or sides. If on ends, they shall extend not less than 18 inches outside of guage of straight track, and shall be not more than 12 inches shorter than buffer-beam at each end.

(4) *Manner of application*. (i) End footboards may be constructed in two sections, provided that practically all space on each side of coupler is filled; each section shall be not less than 3 feet in length.

(ii) Footboards shall be securely bolted to two 1- by 4-inch metal brackets, provided footboard is not cut or notched at any point.

(iii) If footboard is cut or notched or in two sections, not less than four 1- by 3-inch metal brackets shall be used, two located on each side of coupler. Each bracket shall be securely bolted to buffer-beam, end sill or tank frame by not less than two ⅞-inch bolts.

(iv) If side footboards are used, a substantial handhold or rail shall be applied not less than 30 inches nor more than 60 inches above tread or footboard.

(b) *Sill steps*—(1) *Number*. Two or more.

(2) *Dimensions*. (i) Lower tread of step shall be not less than 8 by 12 inches, metal. (May have wooden treads.)

(ii) If stirrup steps are used, clear length of tread shall be not less than 10, preferably 12, inches.

(3) *Location*. One or more on each side at gangway secured to locomotive or tender.

(4) *Manner of application*. Sill steps shall be securely fastened with bolts or rivets.

(c) *End handholds*—(1) *Number*. Two.

(2) *Dimensions*. Minimum diameter, 1 inch, wrought iron or steel. Minimum clearance, 4 inches, except at coupler casting or braces when minimum clearance shall be 2 inches.

(3) *Location*. One on pilot, buffer-beam; one on rear end of tender, extending across front end of locomotive and rear end of tender. Ends of handholds shall be not more than 6 inches from ends of buffer-beam or end sill, securely fastened at ends.

(4) *Manner of application*. End handholds shall be securely fastened with bolts or rivets.

(d) *Side handholds*—(1) *Number*. Four.

(2) *Dimensions*. Minimum diameter, seven-eighths of an inch, wrought iron or steel. Clear length equal to approximate height of tank. Minimum clearance, 2, preferably 2½ inches.

(3) *Location*. Vertical. One on each side of tender near front corner; one on each side of locomotive at gangway.

(4) *Manner of application*. Side handholds shall be securely fastened with bolts or rivets.

(e) *Uncoupling levers*—(1) *Number*. Two double levers, operative from either side.

(2) *Dimensions*. (i) Handles of front-end levers shall be not more than 12, preferably 9, inches from ends of buffer-beam, and shall be so constructed as to give a minimum clearance of 2 inches around handle.

(ii) Rear-end levers shall extend across end of tender with handles not more than 12, preferably 9, inches from side of tender, with a guard bent on handle to give not less than 2 inches clearance around handle.

(3) *Location*. One on rear end of tender and one on front end of locomotive.

(f) *Handrails and steps for headlights*. Switching locomotives with sloping tenders with manhole or headlight located on sloping portion of tender shall be equipped with secure steps and handrail or with platform and handrail leading to such manhole or headlight.

(g) *End-ladder clearance*. No part of locomotive or tender except draft rigging, coupler and attachments, safety chains, buffer block, footboard, brake pipe, signal pipe, steam-heat pipe or arms of uncoupling lever shall extend to within 14 inches of a vertical plane passing through the inside face of knuckle when closed with horn of coupler against buffer block or end sill.

(h) *Couplers*. Locomotives shall be equipped with automatic couplers at rear of tender and front of locomotive.

§ 231.17 Specifications common to all steam locomotives.

(a) *Hand brakes*. (1) Hand brakes will not be required on locomotives nor on tenders when attached to locomotives.

(2) If tenders are detached from locomotives and used in special service, they shall be equipped with efficient hand brakes.

(b) *Running boards*—(1) *Number*. Two.

(2) *Dimensions*. Not less than 10 inches wide. If of wood, not less than 1½ inches in thickness; if of metal, not less than three-sixteenths of an inch, properly supported.

(3) *Location*. One on each side of boiler extending from cab to front end near pilot-beam. (Running boards may be in sections. Flat-top steamchests may form section of running board.)

(4) *Manner of application*. (i) Running boards shall be securely fastened with bolts, rivets, or studs.

(ii) Locomotives having Wootten type boilers with cab located on top of boiler more than 12 inches forward from boiler head shall have suitable running boards running from cab to rear of locomotive, with handrailings not less than 20 nor more than 48 inches above outside edge of running boards, securely fastened with bolts, rivets, or studs.

(c) *Handrails*—(1) *Number*. Two or more.

(2) *Dimensions*. Not less than 1 inch in diameter, wrought iron or steel.

(3) *Location*. One on each side of boiler extending from near cab to near front end of boiler, and extending across front end of boiler, not less than 24 nor more than 66 inches above running board.

(4) *Manner of application*. Handrails shall be securely fastened to boiler.

(d) *Tenders of Vanderbilt type*. (1) Tenders known as the Vanderbilt type shall be equipped with running boards; one on each side of tender not less than 10 inches in width and one on top of tender not less than 48 inches in width, extending from coal space to rear of tender.

(2) There shall be a handrail on each side of top running board, extending from coal space to rear of tank, not less than 1 inch in diameter and not less than 20 inches in height above running board from coal space to manhole.

(3) There shall be a handrail extending from coal space to within 12 inches of rear of tank, attached to each side of tank above side running board not less than 30 nor more than 66 inches above running board.

(4) There shall be one vertical end handhold on each side of Vanderbilt type of tender, located within 8 inches of rear of tank extending from within 8 inches of top of end sill to within 8 inches of side handrail. Post supporting rear end of side running board, if not more than 2 inches in diameter and properly located, may form section of handhold.

(5) An additional horizontal end handhold shall be applied on rear end of all Vanderbilt type of tenders which are not equipped with vestibules. Handhold to be located not less than 30 nor more than 66 inches above top of end sill. Clear length of handhold to be not less than 48 inches.

(6) Ladders shall be applied at forward ends of side running boards.

(e) *Handrails and steps for headlights*. (1) Locomotives having headlights which can not be safely and conveniently reached from pilot-beam or steam chests shall be equipped with secure handrails and steps suitable for the use of men in getting to and from such headlights.

(2) A suitable metal end or side ladder shall be applied to all tanks more than 48 inches in height, measured from the top of end sill, and securely fastened with bolts or rivets.

(f) *Couplers*. Locomotives shall be equipped with automatic couplers at rear of tender and front of locomotive.

§ 231.18 Cars of special construction.

Cars of construction not covered specifically in the foregoing sections in this part, relative to handholds, sill steps, ladders, hand brakes and running boards may be considered as of special construction, but shall have, as nearly as possible, the same complement of handholds, sill steps, ladders, hand brakes, and running boards as are required for cars of the nearest approximate type.

§ 231.19 Definition of "Right" and "Left."

Right or *Left* refers to side of person when facing end or side of car from ground.

§ 231.20 Variation in size permitted.

To provide for the usual inaccuracies of manufacturing and for wear, where sizes of metal are specified, a total variation of 5 percent below size given is permitted.

§ 231.21 Tank cars without underframes.

(a) *Hand brakes*—(1) *Number*. Same as specified for ''Box and other house cars'' (see § 231.1(a)(1)).

(2) *Dimensions*. Same as specified for ''Box and other house cars'' (see § 231.1(a)(2)).

(3) *Location*. Each hand brake shall be so located that it can be safely operated while car is in motion. The brake shaft shall be located on end of car to the left of center.

(4) *Manner of application*. Same as specified for ''Box and other house cars'' (see § 231.1(a)(4)).

(b) *End platforms*—(1) *Number*. Two.

(2) *Dimensions*. Minimum width, ten inches. Minimum thickness, one and three-quarters inches.

(3) *Location*. One on each end extending across car a distance equal to or greater than any other portion of car. Outside edge of end platform shall extend not less than seven inches beyond bulge of tank head and safety railing.

(4) *Manner of application*. End platforms shall be securely fastened to the draft sills and be sufficiently rigid to prevent sagging.

(c) *Sill steps*. Same as specified for ''Box and other house cars'' (see § 231.1(d)).

(d) *End platform safety railing*—(1) *Number*. Two.

(2) *Dimensions*. Minimum of seven-eighths inch diameter, wrought iron or steel, or one and one-quarter inch pipe. Minimum clearance, two and one-half inches.

(3) *Location*. One safety railing at each end of car shall extend horizontally across car not less than thirty-six inches nor more than fifty-four inches above end platform and extend downward within three inches of the end of the platform. The safety railing shall be located not more than six inches from the inside edge of the platform.

(4) *Manner of application*. Safety railings shall be supported at center of car and at each end by extending downward at the ends and attaching to the platform.

(e) *Side railing*—(1) *Number*. Two.

(2) *Dimensions*. One and one-quarter inch pipe. Minimum clearance two and one-half inches.

(3) *Location*. One on each side of car, extending from end platform to end platform at a distance of not less than 51 inches from centerline of car, except that where break in side railing is necessary for side ladder or operating cabinet, the side railing shall be securely attached to such ladder and/or cabinet.

(4) *Manner of application*. Safety railings shall be securely attached to end platforms and supported from the car at intervals not exceeding ten feet.

(f) *Side handholds*—(1) *Number*. Four.

(2) *Dimensions*. Same as specified for ''Box and other house cars'' (see § 231.1(h)(2)).

(3) *Location*. Four horizontal; one on face of end platform end, over sill step, projecting downward or outward. Clearance of outer end of handhold shall be not more than twelve inches from end of car. Vertical portion of end platform safety railing shall be considered as a side vertical handhold.

(4) *Manner of application*. Same as prescribed for ''Box and other house cars'' (see § 231.1(h)(4)).

(g) *End handholds*—(1) *Number*. Four.

(2) *Dimensions*. Same as specified for ''Box and other house cars'' (see § 231.1(i)(2)).

(3) *Location*. Horizontal, one near each side of each end of car on face of end sill. Clearance of outer end of handhold shall not be more than sixteen inches from side of car.

(4) *Manner of application*. Same as specified for ''Box and other house cars'' (see § 231.1(i)(4)).

(h) *Uncoupling levers*. Same as specified for ''Box and other house cars'' (see § 231.1(k)).

(i) *End ladder clearance*. No part of car above end sills within thirty inches from side of car, except buffer block, brake shaft, brake-shaft brackets, brake wheel, running boards or uncoupling lever shall extend to within twelve inches of a vertical plane parallel with end of car and passing through the inside face of knuckle when closed with coupler horn against the buffer block or end sill, and no other part of end of car or fixtures on same, above end sills, other than exceptions herein noted, shall extend beyond the outer face of the buffer block.

(j) *Operating platform, ladder and safety railing*—(1) *Number*. One operating platform, two ladders and safety railing. Not required if all fittings used in the loading or unloading of the tank car are accessible from ground or end platform.

(2) *Dimensions*. (i) Ladder: Ladder stiles, three-eighths by two inches or equivalent, wrought iron or steel. One and one-quarter inch extra strong pipe will be considered equivalent.

(ii) Ladder treads minimum diameter, five-eighths of an inch, wrought iron or steel.

(iii) Minimum clear length of treads, fourteen inches.

(iv) Maximum spacing of treads, nineteen inches.

(v) Minimum clearance of treads and ladder stiles, two inches, preferably two and one-half inches.

(vi) Operating platform, minimum width, seven inches; minimum thickness, one and three-quarters inches.

(vii) Safety railing, one and one-quarter inch wrought iron or steel pipe.

(3) *Location*. (i) Operating platform to be of sufficient length to provide access to all operating fittings. Ladder to be located on sides of car at center.

(ii) The safety railing shall enclose the operating platform, manway and fittings used in the loading and unloading of the tank. Railing shall be open only at the ladders where it shall extend in a vertical direction down to, and be securely attached to the platform. Maximum width of opening, twenty-four inches.

(4) *Manner of application*. (i) The ladders shall be securely fastened to the operating platform. The lower portion of ladder shall be braced in such a manner as to prevent any movement.

(ii) The operating platforms shall be supported to prevent sagging and be securely attached to the tank.

(iii) The safety railing shall be securely attached to four stanchions or corner posts, which shall be securely attached to the tank or operating platform.

(k) *Manner of application of safety appliances on tank cars covered with jackets*. On tanks covered with jackets, metal pads shall be securely attached to the shell proper, to which brackets shall be fastened for securing the safety appliances attached to the tanks; or, the safety appliances (with the exception of the operating platform brackets) may be secured to the jackets reinforced with metal pads at the point of attachment, which pads shall extend at least two inches from the center line of rivet holes. The operating platform brackets shall be secured to the jacket reinforced with suitable bands. When the safety appliances are attached to the jacket covering of the tank, the jacket shall be tightened so that there will be no danger of its slipping around.

[33 FR 19663, Dec. 25, 1968, as amended at 34 FR 11974, July 16, 1969]

§ 231.22 Operation of track motor cars.

On and after August 1, 1963, it shall be unlawful for any railroad subject to the requirements of the Safety Appliance Acts to operate or permit to be operated on its line track motor cars to pull or haul trailers, push trucks,

hand cars, or similar cars or equipment.

EFFECTIVE DATE NOTE: At 28 FR 7839, Aug. 1, 1963, the effective date of § 231.22 was stayed until further notice.

§ 231.23 Unidirectional passenger-train cars adaptable to van-type semi-trailer use.

(a) *Hand brakes*—(1) *Number*. Same as specified for ''Passenger-Train Cars Without End-Platforms.''

(2) *Location*. Each hand brake shall be so located that it can be safely operated while car is in motion. The hand brake operating device shall be located on the end of car to the left of center.

(b) *Brake step*—(1) *Number*. One (1).

(2) *Dimensions*. Not less than twenty-eight (28) inches in length. Outside edge not less than eight (8) inches from face of car, except when ''A'' frame is used and extends beyond end of car, a platform of anti-skid design covering the extended portion of the ''A'' frame may be used as brake step.

(3) *Manner of application*. Brake step shall be securely fastened to car and when additional support is necessary, metal braces having a minimum cross-sectional area three-eighths (3/8) by one and one-half (1½) inches or equivalent shall be securely fastened to body of car with not less than one-half (½) inch bolts or rivets.

(c) *Sill steps*—(1) *Number*. Two (2).

(2) *Dimensions*. Minimum length of tread, ten (10) preferably twelve (12) inches. Minimum cross-sectional area, one-half (½) by one and one-half (1½) inches, or equivalent, wrought iron, steel or other metal of equivalent strength. Minimum clear depth, eight (8) inches.

(3) *Location*. One (1) near the rear or trailing end of the car on each side, not more than twenty-four (24) inches from corner of car to center of tread of sill step.

(4) *Manner of application*. Same as specified for ''Passenger-Train Cars Without End-Platforms.''

(d) *End-clearance*. No part of car above end sills except the brake step shall extend to within twenty (20) inches of a vertical plane parallel with end of car and passing through the outside edge of any part of an adjoining car.

(e) *Side handholds*—(1) *Number*. Four (4).

(2) *Dimensions*. Minimum diameter, five-eighths (5/8) of an inch, wrought iron, steel or metal of equivalent strength. Minimum clear length, sixteen (16) preferably twenty-four (24) inches. Minimum clearance, two (2) preferably two and one-half (2½) inches.

(3) *Location*. Horizontal, two (2) over each sill step. Lower handhold shall be not less than twenty-four (24) nor more than thirty (30) inches above center line of coupler. Upper handhold shall be not less than fifteen (15) nor more than nineteen (19) inches above lower handhold. Clearance of outer end of handhold shall be not more than eight (8) inches from end of car.

(4) *Manner of application*. Side handholds shall be securely fastened with not less than one-half (½) inch bolts with nuts outside (when possible) and riveted over, or with not less than one-half (½) inch rivets.

(f) *Horizontal end-handholds*—(1) *Number*. Seven (7).

(2) *Dimensions*. Minimum diameter, five-eighths (5/8) of an inch, wrought iron, steel or other metal of equivalent strength. Minimum clear length, sixteen (16) inches. Minimum clearance, two (2) preferably two and one-half (2½) inches.

(3) *Location*. End-sill: One (1) near each side at the rear or trailing end of car on face of end-sill or sheathing over end-sill, projecting outward or downward. Clearance of outer end of handhold shall be not more than sixteen (16) inches from side of car.

(i) Lower: One near each side of the rear or trailing end of car, not less than twenty-four (24) nor more than thirty (30) inches above center line of coupler.

(ii) Upper: One (1) near each side at the rear or trailing end of car not less than fifteen (15) nor more than nineteen (19) inches above lower handholds. Clearance of outer ends of lower and upper handholds shall be not more than eight (8) inches from side of car. Lower and upper handholds shall be spaced to coincide with corresponding side handholds, a variation of two (2) inches being allowed. On front end of car there shall be one (1) additional end handhold

full length of car not less than forty (40) nor more than fifty (50) inches above center line of coupler. Clearance of each end of handhold shall be not more than eight (8) inches from side of car. When construction will not permit the use of a single handhold, four (4) handholds, each not less than sixteen (16) inches in length may be used, provided dimensions and location coincide.

(4) *Manner of application.* End handholds shall be securely fastened with not less than one-half (½) inch bolts with the nuts outside (when possible) and riveted over, or with not less than one-half (½) inch rivets. When marker sockets or brackets are located so that they cannot be conveniently reached, suitable steps and handholds shall be provided for men to reach such sockets or brackets.

(g) *Uncoupling levers.* Each car shall be equipped to provide means of coupling and uncoupling without the necessity of men going between the cars.

§ 231.24 Box and other house cars with roofs, 16 feet 10 inches or more above top of rail.[1]

(a) *Hand brakes*—(1) *Number.* Same as specified for ''Box and Other House Cars.''

(2) *Dimensions.* Same as specified for ''Box and Other House Cars.''

(3) *Location.* Each hand brake shall be located so that it can be safely operated from the end-platform. Each brake shaft shall be located on end of car to left of center and not more than twenty-four (24) inches from left side of car.

(4) *Manner of application.* Same as specified for ''Box and Other House Cars.''

(b) *End-platforms*—(1) *Number.* Two (2).

(2) *Dimensions.* Width, not less than ten (10) inches. Length, full width of car.

(3) *Location.* One (1) on each end of car not more than eight (8) inches above center sill.

(4) *Manner of application.* Each end-platform shall be securely supported by not less than four (4) metal braces having a minimum cross sectional area three-eighths (⅜) by one and one-half (1½) inches or equivalent which shall be securely fastened to body of car with not less than one-half (½) inch bolts or rivets. The outside edge of each end-platform shall be not less than six (6) inches from a vertical plane parallel with end of car and passing through the inside face of knuckle when closed with coupler-horn against the buffer-block or end sill and cushioning device (if used) at full buff. End-platform shall be made of running board material as specified for ''Box and Other House Cars.''

(c) *Sill steps.* Same as specified for ''Box and Other House Cars.''

(d) *End-ladder clearance.* No part of car above end-sills within thirty (30) inches from side of car, except buffer block brake-shaft, brake wheel, end-platform, horizontal end handholds, or coupling lever shall extend to within twelve (12) inches of a vertical plane parallel with end of car and passing through the inside face of knuckle, when closed with the coupler horn against the buffer block or end-sill and cushioning device (if used) at full buff, and no other part of end of car or fixtures on same above end-sill, other than exceptions herein noted, shall extend beyond outer face of buffer block.

(e) *Side handholds*—(1) *Number.* Sixteen (16).

(2) *Dimensions.* Same as specified for ''Box and Other House Cars.''

(3) *Location.* Horizontal: Four (4) near each end and on each side of car spaced

[1] (a) Each car of this type built or rebuilt after (January 1, 1976) or under construction prior thereto and placed in service after (effective date) shall be equipped as specified in § 231.27(a) through (h) and (j) or, if it has roof hatches, as specified in § 231.28.

(b) Each car of this type placed in service after November 23, 1964 and before (effective date) shall be equipped—

(1) As specified in § 231.24; or

(2) As specified in § 231.27(a) through (h) and (j); or

(3) If it has roof hatches, as specified in § 231.28.

(c) Each car of this type placed in service before October 22, 1964, or under construction on October 22, 1964 and placed in service before November 23, 1964, shall be equipped—

(1) As specified in § 231.1; or

(2) As specified in §§ 231.1 and 231.27(i); or

(3) As specified in § 231.27(a) through (h) and (j); or

(4) If it has roof hatches, as specified in § 231.28.

not more than nineteen (19) inches apart and with the bottom handhold located not more than twenty-one (21) inches from top tread of sill step, and top handhold shall coincide in height with horizontal end-platform handhold, a variation of two (2) inches being allowed. Spacing of side handholds shall be uniform within a limit of two (2) inches from top handhold to bottom handhold. Clearance of outer ends of handholds shall be not more than eight (8) inches from end of car.

(4) *Manner of application*. Same as specified for ''Box and Other House Cars,'' except each bottom handhold shall have foot guard or upward projection not less than two (2) inches in height near inside end.

(f) *Horizontal end handholds*—(1) *Number*. Four (4).

(2) *Dimension*. Same as specified for ''Box and Other House Cars.''

(3) *Location*. One (1) near each side of each end of car on outer edge of end platform, projecting downward with clearance of outer end not more than sixteen (16) inches from side of car.

(4) *Manner of application*. Same as specified for ''Box and Other House Cars.''

(g) *Horizontal end-platform handholds*—(1) *Number*. Two (2).

(2) *Dimensions*. Same as specified for ''Horizontal End Handholds'' for ''Box and Other House Cars,'' except length shall extend across end of car.

(3) *Location*. Extending across each end of car, not less than forty-eight (48) nor more than sixty (60) inches above tread of end-platform with clearance at each end of not more than four (4) inches from side of car, supported by an extra leg near center of handholds.

(4) *Manner of application*. Same as specified for ''Horizontal End Handholds'' for ''Box and Other House Cars.''

(h) *Vertical end-handholds*—(1) *Number*. Four (4).

(2) *Dimensions*. Minimum diameter five-eighths (⅝) of an inch, wrought iron or steel. Minimum clearance, two (2), preferably two and one-half (2½) inches.

(3) *Location*. One (1) on each side of each end of car, not more than four (4) inches from side of car, extending downward from end of horizontal end-platform handhold to within eight (8) inches above tread of end-platform. One (1) continuous handhold with two (2) right angles, or two (2) right angle handholds, may take the place of two (2) specified vertical end-handholds and one (1) horizontal end-platform handhold, provided the dimensions and locations coincide, and extra legs at points of angle and center are provided and securely fastened to car.

(4) *Manner of application*. Same as specified for ''Box and Other House Cars.''

(i) *Uncoupling levers*. Same as specified for ''Box and Other House Cars.''

(j) *Painting and stenciling*. (1) That portion of each end of car more than fifteen (15) feet above top of rail shall be painted with contrasting reflectorized paint and shall bear the words ''No running board'' to the left of center and ''Excess height car'' to the right of center.

(2) Lettering to be not less than three (3) inches high. On each side-sill near end corner there shall be painted a yellow rectangular area with a three-fourths (¾) inch black border containing the words ''This car excess height—no running board.'' Lettering to be not less than one and one-half (1½) inches high. When car is equipped with center sill or underframe cushioning device having more than twelve (12) inches longitudinal impact absorbing travel, and a part of the uncoupling device and/or brake pipe is located parallel to the exposed end of the center sill, such part shall provide at least two (2) inches of clearance near the coupler of sufficient length to permit use as an emergency handhold during air hose coupling operation and the top of exposed ends of sliding center sill shall be coated with anti-skid paint.

[33 FR 19663, Dec. 25, 1968, as amended at 40 FR 34347, Aug. 15, 1975]

§ 231.25 Track motorcars (self-propelled 4-wheel cars which can be removed from the rails by men).

(a) *Handbrakes* (*includes foot operated brake*). Each track motorcar shall be equipped with an efficient handbrake so located that it can be safely operated while the car is in motion. Each handbrake shall be equipped with a ratchet or other suitable device which

will provide a means of keeping the brake applied when car is not in motion.

NOTE: The requirements of this rule will be satisfied if the ratchet or other suitable device operates in connection with at least one handbrake on track motorcars that may be equipped with more than one such brake.

(b) *Handholds*. One or more safe and suitable handholds conveniently located shall be provided. Each handhold shall be securely fastened to car.

(c) *Sill steps or footboards*. Each track motorcar shall be equipped with safe and suitable sill steps or footboards conveniently located and securely fastened to car when bed or deck of track motorcar is more than 24 inches above top of rail.

(d) *Couplers*. When used to haul other cars, each track motorcar shall be equipped with a coupler at each end where such cars are coupled (1) which provides a safe and secure attachment, (2) which can be coupled or uncoupled without the necessity of men going between the ends of the cars.

§ 231.26 Pushcars.

(a) *Handbrakes*. When used to transport persons, each pushcar shall be equipped with an efficient handbrake so located that it can be safely operated while the car is in motion.

(b) *Handholds* (*includes handles*). Each pushcar shall be provided with one or more secure handholds. When used to transport persons, each pushcar shall be provided with one or more safe and suitable handholds conveniently located above the top of the bed of each pushcar.

(c) *Sill steps or footboards*. When used to transport persons, each pushcar shall be equipped with safe and suitable sillsteps or footboards conveniently located and securely fastened to car, when bed or deck of pushcar is more than 24 inches above top of rail.

(d) *Couplers*. When moved together with other vehicles, each pushcar shall be equipped with a coupler at each end where such vehicles are coupled (1) which provides a safe and secure attachment, and (2) which can be coupled or uncoupled without the necessity of men going between the ends of the cars.

NOTE: Sections 231.25 and 231.26 are applicable only when the vehicles governed thereby are coupled together and moved together.

§ 231.27 Box and other house cars without roof hatches or placed in service after October 1, 1966.

(a) *Handbrakes*. The handbrake may be of any efficient design, but must provide the same degree of safety as, or a greater degree of safety than, the following specifications:

(1) *Number*. (i) Each box or other house car without roof hatches shall be equipped with an efficient vertical wheel handbrake which shall operate in harmony with the power brake thereon.

(ii) The handbrake may be of any efficient design, but must provide a total braking force applied to brake shoes not less than the total force applied to the brake shoes by the brake cylinders at 50 pounds per square inch.

(2) *Dimensions*. (i) The brake wheel may be deep or shallow, of malleable iron, wrought iron, steel, or other material of equivalent strength.

(ii) Overall diameter of brake wheel nominally twenty-two (22) inches.

(iii) Depth of brake wheel hub shall be two and five-eighths (2⅝) inches with square taper shaft fit, taper two (2) inches in twelve (12) inches with small end of taper fit seven-eighths (⅞) inches.

(iv) Brake wheel and drum shall be arranged so that both will revolve when applying and gradually releasing the handbrake. Handbrake shall be provided with means to prevent application of the brake by winding in a counterclockwise direction.

(v) Brake shaft shall be arranged with a square fit at its outer end to secure the handbrake wheel; said square fit shall be not less than seven-eighths (⅞) of an inch square. Square-fit taper: Nominally two (2) in twelve (12) inches (see Plate A).

(vi) All chains shall be not less than nine-sixteenths (9/16) inch BBB coil chain.

(vii) All handbrake rods shall be not less than three-fourths (¾) inch diameter.

(3) *Location*. (i) The handbrake shall be so located that it can be safely operated from horizontal end platform while car is in motion.

(ii) The brake shaft shall be located on end of car, to the left of and not less than seventeen (17) nor more than twenty-two (22) inches from center and not less than twenty-six (26) nor more than forty (40) inches above top of end-platform tread.

(4) *Manner of application.* (i) Brake wheel shall be held in position on brake shaft by a nut on a threaded extended end of brake shaft; said thread portion shall be not less than three-fourths (¾) of an inch in diameter; said nut shall be secured by riveting over or by the use of a locknut or suitable cotter.

(ii) Outside edge of brake wheel shall be not less than four (4) inches from a vertical plane parallel with end of car and passing through the inside face of knuckle when closed with coupler horn against the buffer block or end sill.

(iii) Handbrake housing shall be securely fastened to car.

(b) *End platforms*—(1) *Number.* Two (2).

(2) *Dimensions.* Width not less than eight (8) inches; length, not less than sixty (60) inches.

(3) *Location.* One (1) centered on each end of car between inner ends of handholds not more than eight (8) inches above top of center sill.

(4) *Manner of application.* (i) Each end platform shall be securely supported by not less than three (3) metal braces having a minimum cross sectional area of three-eighths (⅜) by one and one-half (1½) inches or equivalent, which shall be securely fastened to body of car with not less than one-half (½) inch bolts or rivets.

(ii) Where conventional draft gear or cushioning device having longitudinal travel less than six (6) inches is used the outside edge of each end platform shall be not less than twelve (12) inches from a vertical plane parallel with end of car and passing through the inside face of knuckle when closed with coupler horn against buffer block. Where cushioning device having longitudinal travel six (6) inches or more is used the outside edge of each end platform shall be not less than six (6) inches from a vertical plane parallel with end of car and passing through the inside face of knuckle when closed with end sill and cushioning device at full buff. End platform shall be made of wood or of material which provides the same as or a greater degree of safety than wood of 1⅛ inches thickness. When made of material other than wood the tread surface shall be of anti-skid design and constructed with sufficient open space to permit the elimination of snow and ice from the tread surface.

(c) *Sill steps*—(1) *Number.* Four (4).

(2) *Dimensions.* Minimum cross-sectional area one-half (½) by one and one-half (1½) inches, or equivalent, of wrought iron, steel, or other material of equivalent strength. Minimum length of tread, ten (10), preferably twelve (12) inches. Minimum clear depth, eight (8) inches.

(3) *Location.* (i) One (1) near each end of each side car, so that there shall be no more than eighteen (18) inches from end of car to center of tread of sill step.

(ii) Outside edge of tread of step shall be not more than four (4) inches inside of face of side of car, preferably flush with side of car.

(iii) Tread shall be not more than twenty-four (24), preferably not more than twenty-two (22) inches above the top of rail.

(4) *Manner of application.* (i) Sill steps exceeding twenty-one (21) inches in depth shall have an additional tread.

(ii) Sill steps shall be securely fastened with not less than one-half (½) inch bolts with nuts outside (when possible) and riveted over, or with not less than one-half (½) inch rivets.

(d) *End ladder* (*appliances*) *clearance.* No part of car above end sills within thirty (30) inches from side of car, except buffer block, brake shaft, brake wheel, end platform, horizontal end handholds, or uncoupling lever shall extend to within twelve (12) inches of a vertical plane parallel with end of car and passing through the inside face of knuckle, when closed with the coupler horn against the buffer block or end sill and cushioning device (if used) at full buff, and no other part of end of car or fixtures on same above end sill, other than exceptions herein noted, shall extend beyond outer face of buffer block.

(e) *Side handholds*—(1) *Number.* Sixteen (16).

(2) *Dimensions.* Minimum diameter, five-eighths (⅝) of an inch, wrought iron, steel, or other material of equivalent strength. Minimum clear length,

sixteen (16) inches, preferably twenty-four (24) inches. Minimum clearance, two (2), preferably two and one-half (2½) inches.

(3) *Location*. Horizontal; four (4) near each end and on each side of car spaced not more than nineteen (19) inches apart and with the bottom handhold located not more than twenty-one (21) inches from top tread of sill step, and top handhold shall coincide in height with top end handhold, a variation of two (2) inches being allowed. Spacing of side handholds shall be uniform within a limit of two (2) inches from top handhold to bottom handhold. Clearance of outer ends of handholds shall be not more than eight (8) inches from end of car.

(4) *Manner of application*. Side handholds shall be securely fastened with not less than one-half (½) inch bolts with nuts outside (when possible) and riveted over, or with not less than one-half (½) inch rivets. Each bottom handhold shall have foot guard or upward projection not less than two (2) inches in height near inside end.

(f) *End handholds*—(1) *Number*. Sixteen (16).

(2) *Dimensions*. (i) Minimum diameter, five-eighths (⅝) of an inch, wrought iron, steel, or other material of equivalent strength.

(ii) Minimum clear length, sixteen (16) inches, preferably twenty-four (24) inches.

(iii) Minimum clearance, two (2) preferably two and one-half (2½) inches.

(3) *Location*. Horizontal: Four (4) near each side and on each end of car spaced not more than nineteen (19) inches apart and with the bottom handhold located not more than twenty-one (21) inches from top tread of sill step, and top handhold shall coincide in height with end platform handholds, a variation of two (2) inches being allowed. Clearance of outer ends of handholds shall be not more than eight (8) inches from side of car.

(4) *Manner of application*. End handholds shall be securely fastened with not less than one-half (½) inch bolts with nuts outside (when possible) and riveted over, or with not less than one-half (½) inch rivets. Each bottom handhold shall have foot guard or upward projection not less than two (2) inches in height near inside end.

(g) *Horizontal end-platform handholds*—(1) *Number*. Two (2).

(2) *Dimensions*. (i) Minimum diameter, five-eighths (⅝) of an inch, wrought iron, steel, or other material of equivalent strength.

(ii) Minimum clearance, two (2) preferably two and one-half (2½) inches.

(iii) Minimum clear length sixty (60) inches. When security of attachment requires, an extra supporting leg may be applied near center of clear length.

(3) *Location*. One (1) on each end of car above end platform. Outer legs shall be not more than six (6) inches from inner legs of top end handholds. Height above tread of end platform: Not less than forty-eight (48) nor more than sixty (60) inches.

(4) *Manner of application*. End-platform handholds shall be securely fastened with not less than one-half (½) inch bolts with nuts outside (when possible) and riveted over, or with not less than one-half (½) inch rivets.

(h) *Uncoupling levers*—(1) *Number*. Two (2).

(2) *Dimensions*. (i) Handles of uncoupling levers, except those shown on Plate B or of similar designs, shall be not more than six (6) inches from side of car.

(ii) Uncoupling levers of design shown on Plate B and of similar designs shall conform to the following prescribed limits:

(*a*) Handles shall be not more than twelve (12), preferably nine (9) inches from sides of car. Center lift arms shall be not less than seven (7) inches long.

(*b*) Center of eye at end of center lift arm shall be not more than three and one-half (3½) inches beyond center of eye of uncoupling pin of coupler when horn of coupler is against the buffer block or end sill (see Plate B).

(*c*) End of handles shall extend not less than four (4) inches below bottom of end sill or shall be so constructed as to give a minimum clearance of two (2) inches around handle. Minimum drop of handles shall be twelve (12) inches; maximum, fifteen (15) inches overall (see Plate B).

(iii) Handles of uncoupling levers of the ''rocking'' or ''push-down'' type shall be not less than eighteen (18)

inches from top of rail when lockblock has released knuckle, and a suitable stop shall be provided to prevent inside arm from flying up in case of breakage.

(3) *Location.* One (1) on each end of car. When single lever is used, it shall be placed on left side of end of car.

(i) *Existing box and other house cars without roof hatches.* (1) Box and other house cars without roof hatches built on or before April 1, 1966, or under construction prior thereto and placed in service before October 1, 1966, shall be deemed equipped as nearly as possible within the intent of § 231.1 and of this section when:

(i) The running board, roof handholds over side and end ladders at ''A'' end of car and ladder treads above the fourth tread from bottom of side and end ladder at ''A'' end are removed;

(ii) One (1) horizontal end-platform handhold is applied on each end of car as specified in this section except the right hand end shall be not more than eight (8) inches from side of car, or where car end contour makes impractical the use of a single continuous end handhold, there is applied the equivalent consisting of two (2) handholds, the center handhold to be a minimum of thirty (30) inches in clear length and the handhold to the right to be a minimum of nineteen (19) inches in clear length and to extend to within eight (8) inches of the right side of the car, such handholds to be not more than twelve (12) inches apart; and

(iii) With handbrake operated near roof of car: a brake step shall be provided as specified in § 231.1 and lettering one and one-half (1½) inches high shall be painted on a yellow background on side sill near ''B'' end of car with a three-fourths (¾) inch black border containing the words ''Keep Off Roof—No Running Board,'' or with handbrake operated from approximate level of top of end sill: roof handholds and side and end ladder treads above the fourth tread from the bottom of ladders at ''B'' end of car shall be removed and a brake step as specified by § 231.1 shall be used with top of tread surface being level with or not more than four (4) inches below adjacent end handhold.

(2) Paragraph (i)(1)(ii) of this section shall not apply to cars equipped with end platforms and end platform handholds.

(j) *Painting and marking.* Box and other house cars with roofs 16 feet and 10 inches or more above top of rail shall be painted and marked as follows:

(1) That portion of each end of the car which is more than fifteen (15) feet above top of rail shall be painted with contrasting reflectorized paint and bear the words ''excess height car'' in lettering not less than three (3) inches high; and

(2) On each side sill near end corner there shall be painted or otherwise displayed a yellow rectangular area with a three-fourths (¾) inch black border containing the words ''this car excess height'' in lettering not less than one and one-half (1½) inches high.

(Secs. 2, 4, and 6, 27 Stat. 531, as amended; secs, 1 and 3, 32 Stat. 943, as amended; sec. 6(e) and (f), 80 Stat. 939 (45 U.S.C. 2, 4, 6, 8, and 10, 11–16 and 49 U.S.C. 103(c)(1))

[33 FR 19663, Dec. 25, 1968, as amended at 40 FR 34347, Aug. 15, 1975; 49 FR 26745, June 29, 1984]

§ 231.28 Box and other house cars with roof hatches built or placed in service after October 1, 1966.

The specifications of § 231.27 shall apply except as to the following:

(a) *Running boards.* Same as specified in § 231.1, except: the end of longitudinal running board shall be not less than six (6) inches from a vertical plane parallel with end of car and passing through the inside face of knuckle when closed with coupler horn against buffer block or end sill.

(b) *Ladders*—(1) *Number.* Two (2).

(2) *Dimensions.* (i) Minimum clear length of tread: Sixteen (16) inches.

(ii) Maximum spacing between treads nineteen (19) inches.

(3) *Location.* One (1) on each end of car not more than eight (8) inches from left-hand side.

(4) *Manner of application.* Same as specified in § 231.1.

(c) *Roof handholds*—(1) *Number.* Two (2), one (1) over each ladder.

(2) *Dimensions.* Same as specified in § 231.1.

(3) *Location.* On roof of car. One (1) parallel to treads of each ladder, not

less than eight (8) nor more than fifteen (15) inches from edge of roof, except on refrigerator cars where ice hatches prevent, when location may be nearer edge of roof.

(4) *Manner of application*. Same as specified in § 231.1.

(d) *End handholds*. (Treads of end ladders are end handholds.) Same as specified for § 231.27.

(e) *Existing box and other house cars with roof hatches*. Box and other house cars with roof hatches built on or before April 1, 1966, or under construction prior thereto and placed in service before October 1, 1966, shall be deemed equipped as nearly as possible within the intent of § 231.1 and of this section when: Equipped as specified in § 231.1, except (1) the side ladder treads above the fourth tread from bottom of side ladder near ''A'' end of car and roof handhold over the side ladder near ''A'' end shall be removed; (2) and (1) end platform handhold shall be provided on each end of car as specified in § 231.27(i); and when handbrake is operated near roof of car a brake step shall be provided as specified by § 231.1 or when handbrake is operated from approximate level of top of end sill the roof handhold over side ladder near ''B'' end and treads above the fourth tread from bottom of side ladder near ''B'' end shall be removed and a brake step as specified in § 231.1 shall be used with top of tread surface level with or not more than four (4) inches below adjacent end handhold.

(Secs. 2, 4, and 6, 27 Stat. 531, as amended; secs, 1 and 3, 32 Stat. 943, as amended; sec. 6(e) and (f), 80 Stat. 939 (45 U.S.C. 2, 4, 6, 8, and 10, 11–16 and 49 U.S.C. 103(c)(1))

[33 FR 19663, Dec. 25, 1968, as amended at 49 FR 26745, June 29, 1984]

§ 231.29 Road locomotives with corner stairways.

After September 30, 1979, road locomotives with corner stairway openings must be equipped with (a) uncoupling mechanisms that can be operated safely from the bottom stairway opening step as well as ground level, and (b) the vertical handholds and horizontal end handholds prescribed in § 231.30(e) and (g). No part of the uncoupling mechanism may extend into the stairway opening or end platform area when the mechanism is in its normal position or when it is operated. Each carrier shall so equip forty percent (40 percent) of its road locomotives by October 1, 1977, seventy percent (70 percent) by October 1, 1978, and all its road locomotives by October 1, 1979.

[41 FR 37783, Sept. 8, 1976]

§ 231.30 Locomotives used in switching service.

(a) *General requirements*. (1) Except for steam locomotives equipped as provided in § 231.16 of this part, all locomotives used in switching service built after March 31, 1977, must be equipped as provided in this section.

(2) Except for steam locomotives equipped as prescribed in § 231.16 of this part, all locomotives built prior to April 1, 1977, used in switching service after September 30, 1979, shall be equipped as provided in this section. Each carrier shall so equip forty percent (40 percent) of such locomotives by October 1, 1977, seventy percent (70 percent) by October 1, 1978, and all such locomotives by October 1, 1979.

(3) Locomotives without corner stairway openings may not be used to perform any switching service after September 30, 1979 except passenger car switching service at passenger stations.

(b) *Definitions*. (1) *Locomotive used in switching service* means a locomotive regularly assigned to perform yard switching service.

(2) *Switching service* means the classification of cars according to commodity or destination; assembling of cars for train movements; changing the position of cars for purposes of loading, unloading, or weighing, placing of locomotives and cars for repair or storage; or moving of rail equipment in connection with work service that does not constitute a road movement. However, this term does not include movement of a train or part of a train within yard limits by the road locomotive and the placement of locomotives or cars in a train or their removal from a train by the road locomotive while en route to the train's destination.

(3) *Safety tread surface* means that portion of anti-skid surface of a switching step that actually is contacted by a shoe or boot.

(4) *Uncoupling mechanism* means the arrangement for operating the coupler lock lift, including the uncoupling lever and all other appurtenances that facilitate operation of the coupler.

(c) *Switching step*—(1) *Number*. Each locomotive used in switching service must have four (4) switching steps. (See Plate A)

(2) *Dimensions*. Each such switching step must have—

(i) On locomotives built after March 31, 1977, a minimum width of twenty-four (24) inches and a minimum depth of twelve (12) inches, except when necessary to accommodate the turning arc of a six-wheel truck and its appurtenances, the inside edge of the switching step shall have a minimum width of seventeen (17) inches (See Plate B);

(ii) On locomotives built prior to April 1, 1977, a minimum width of eighteen (18) inches, and a minimum depth of eight (8) inches;

(iii) A backstop, solid or perforated, with minimum height of backstop of six (6) inches above the safety tread surface; and

(iv) A height of not more than nineteen (19) inches, preferably fifteen (15) inches, measured from top of rail to the safety tread surface.

(3) *Location*. Switching steps must be located on each side near each end of a locomotive used in switching service. The bottom step of the stairway at these locations may also serve as a switching step if it meets all of the requirements of this section.

(4) *Manner of application*. (i) Switching steps must be supported by a bracket at each end and fastened to the bracket by two bolts or rivets of at least one-half (½) inch diameter or by a weldment of at least twice the strength of a bolted attachment.

(ii) Vertical clearance must be unobstructed, except for minor intrusions created by mechanical fasteners or a small triangular gusset plate at the platform level walkway, and free for use for at least a distance of eighty-four (84) inches over a portion of the switching step that is not less than seven (7) inches deep by eighteen (18) inches wide on locomotives built prior to April 1, 1977, and of not less than seven (7) inches deep by twenty-four (24) inches wide on locomotives built after March 31, 1977.

(5) *Material*. (i) Steel or other material of equivalent or better strength and deflection characteristics, anti-skid, safety design, having at least fifty percent (50%) of the tread surface as open space must be used.

(ii) When the step material creates a second level safety tread surface, the maximum difference in surface levels may not exceed three-eighths (⅜) of an inch.

(iii) The safety tread surface must extend to within one-half (½) inch of each edge of the step.

(6) *Visibility*. The outer edge of each switching step that is not illuminated must be painted a contrasting color. On locomotives built after March 31, 1977, switching steps shall be illuminated; on multiple-unit locomotive consists used in switching service, only the front switching steps of the leading unit and the rear switching steps of the trailing unit must be illuminated.

(d) *End footboards and pilot steps*. (1) Except for steam locomotives equipped as provided in § 231.16, locomotives used in switching service built after March 31, 1975, may not be equipped with end footboards or pilot steps.

(2) Except for steam locomotives equipped as provided in § 231.16, locomotives used in switching service built before April 1, 1975, may not be equipped with end footboards or pilot steps after September 30, 1978. Whenever end footboards or pilot steps are removed from a locomotive, the uncoupling mechanism and horizontal end handholds of the locomotive must be modified to comply with paragraphs (f) and (g) of this section.

(e) *Vertical handholds*. Each switching step must be provided with two (2) vertical handholds or handrails, one on each side of the switching step stairway.

(1) On locomotives built after March 31, 1977, each vertical handhold must—

(i) Be constructed of wrought iron, steel or other material of equivalent strength and durability that is at least one (1) inch diameter and be securely fastened to the locomotive with one-half (½) inch or larger bolts or rivets;

(ii) Begin not less than six (6) inches nor more than thirty-two (32) inches

above the safety tread surface of the switching step; on units with high snowplows, each must begin not more than thirty-six (36) inches above the safety tread surface of the switching step;

(iii) Extend upward from switching step surface at least forty-eight (48) inches;

(iv) Be painted in a contrasting color to a height of at least forty-eight (48) inches above the safety tread surface of the switching step; and

(v) Provide at least two and one-half (2½) inches of usable hand clearance throughout its entire length.

(2) On locomotives built before April 1, 1977, each vertical handhold must—

(i) Be constructed of wrought iron, steel or other material of equivalent strength and durability that is at least seven-eighths (⅞) inch in diameter and be securely fastened with one-half (½) inch or larger bolts or rivets;

(ii) Begin not less than five (5) inches nor more than thirty-two (32) inches above the safety tread surface; on units with high snowplows, each must begin not more than thirty-six (36) inches above the safety tread surface;

(iii) Extend upward from safety tread surface of the switching step at least forty-eight (48) inches;

(iv) Be painted in a contrasting color to a height of at least forty-eight (48) inches above the safety tread surface of the switching step; and

(v) Provide at least two and one-half (2½) inches usable hand clearance throughout its entire length.

(f) *Uncoupling mechanisms*. Each locomotive used in switching service must have means for operating the uncoupling mechanism safely from the switching step as well as from ground level. No part of the uncoupling mechanism may extend into the switching step or stairway opening or end platform area when the mechanism is in its normal position or when it is operated. (See Plate A)

(g) *Horizontal end handholds*. Each locomotive used in switching service must have four (4) horizontal end handholds.

(1) Each horizontal end handhold must—

(i) Be constructed of wrought iron, steel or other material of equivalent strength and durability that is at least five-eighths (⅝) inch in diameter and be securely fastened to the locomotive with one-half (½) inch or larger bolts or rivets;

(ii) Be located not less than thirty (30) inches nor more than fifty (50) inches above the top of rail with its outer end not more than 16 inches from the side of the locomotive; on units with a high snowplow that makes normal end handhold location inaccessible, end handhold shall be located on top of plow blade, with the center of the handhold not more than fifty-three (53) inches above the top of rail, and be in line with the slope of the plow blade;

(iii) Be at least fourteen (14) inches long; and

(iv) Provide at least two (2) inches, preferably two and one-half (2½) inches, usable hand clearance throughout its entire length.

(2) An uncoupling lever may also serve as a horizontal end handhold if it complies with the requirements of this paragraph. When an uncoupling lever also serves as the horizontal end handhold, it is considered to be securely fastened if its securement brackets are attached to the locomotive by one-half (½) inch or larger bolts or rivets and its movement between those brackets is limited to the rotation necessary for performance of the uncoupling function.

ITEM	DIMENSION NEW UNITS	DIMENSION EXISTING UNITS
A. Height of switching step above rail	15" preferred 19" maximum	15" preferred 19" maximum
B. Minimum width of switching step (between stairway supports)	24"	18"
C. Minimum depth of switching step	12"	8"
D. Minimum height of backstop	6"	6"
E. Minimum distance from front edge of switching step to front edge of first step above	7"	7"
F. Distance above switching step for start of vertical handholds Minimum-Maximum	6"-32"	5"-32"
EXCEPTION: Maximum for units with high snowplows	36"	36"
G. Clear height above switching step	84"	84"
H. Vertical handhold clearance	2½" minimum	2½" minimum
I. Height above top of rail for horizontal handhold or uncoupling lever if used as horizontal handhold	30"-50"	30"-50"
EXCEPTION: Maximum for units with high snowplow	53"	53"
J. Minimum height above switching step of vertical handhold	48"	48"
K. Horizontal handhold clearance or uncoupling lever clearance if used as horizontal handhold	2"-2½"	2"-2½"

NOTES:

1. Switching steps must be supported by a bracket at each end and fastened to the bracket by two bolts or rivets of at least one-half (½) inch diameter or by a weldment of at least twice the strength of a bolted attachment.

2. The outer edge of each switching step that is not illuminated must be painted a contrasting color.

3. Vertical handholds must be painted in a contrasting color to a height of at least forty-eight (48) inches above the safety tread surface of the switching step.

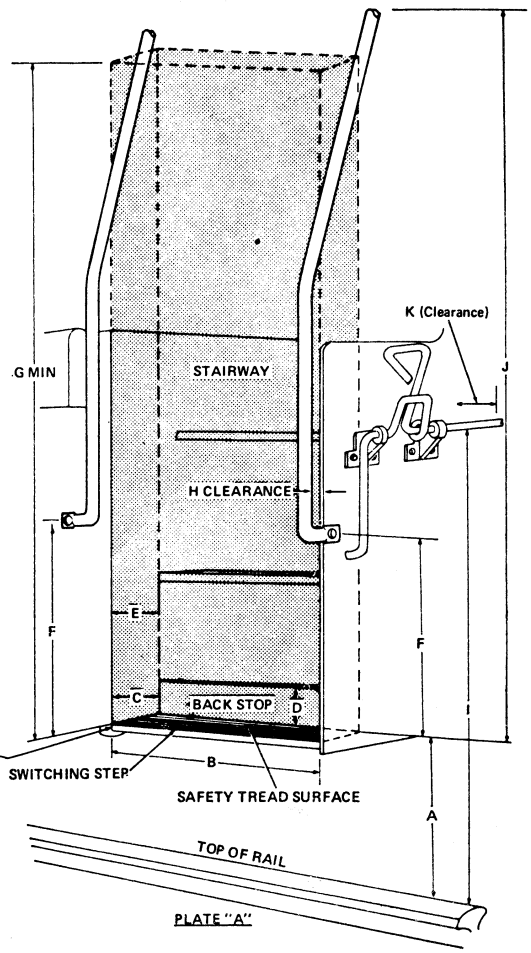

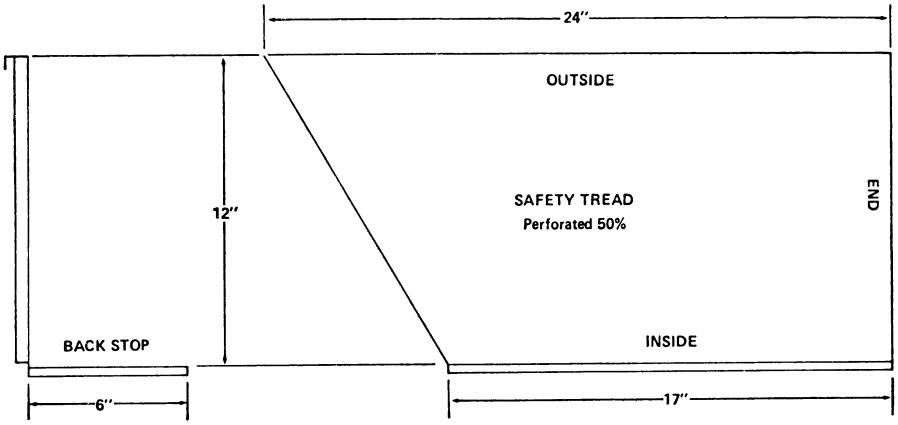

PLATE "B"

SWITCHING STEP SHOWING INSIDE RELIEF FOR CLEARANCE OF SIX-WHEEL TRUCK

[41 FR 37783, Sept. 8, 1976]

§ 231.31 Drawbars for freight cars; standard height.

(a) Except on cars specified in paragraph (b) of this section—

(1) On standard gage (56½-inch gage) railroads, the maximum height of drawbars for freight cars (measured perpendicularly from the level of the tops of the rails to the centers of the drawbars) shall be 34½ inches, and the minimum height of drawbars for freight cars on such standard gage railroads (measured in the same manner) shall be 31½ inches.

(2) On 36-inch gage railroads, the maximum height of drawbars for freight cars (measured perpendicularly from the level of the tops of the rails to the centers of the drawbars) shall be 26 inches, and the minimum height of drawbars for freight cars on such 36-inch gage railroads (measured in the same manner) shall be 23 inches.

(3) On 24-inch gage railroads, the maximum height of drawbars for freight cars (measured perpendicularly from the level of the tops of the rails to the centers of the drawbars) shall be 17½ inches, and the minimum height of drawbars for freight cars on 24-inch gage railroads (measured in the same manner) shall be 14½ inches.

(4) On railroads operating on track with a gage other than those contained in paragraphs (a)(1) through (a)(3) of this section, the maximum and minimum height of drawbars for freight cars operating on those railroads shall be established upon written approval of FRA.

(b) This section shall not apply to a railroad all of whose track is less than 24 inches in gage.

[66 FR 4192, Jan. 17, 2001]

APPENDIX A TO PART 231—SCHEDULE OF CIVIL PENALTIES[1]

FRA safety appliance defect code section[2]	Violation	Willful violation
110.A1 Hand Brake or Hand Brake Part Missing	$5,000	$7,500
110.A2 Hand Brake or Hand Brake Part Broken	5,000	7,500
110.A3 Hand Brake or Hand Brake Part Loose or Worn	2,500	5,000
110.B1 Hand Brake Inoperative	5,000	7,500
110.B2 Hand Brake Inefficient	2,500	5,000
110.B3 Hand Brake Improperly Applied	2,500	5,000
110.B4 Hand Brake Incorrectly located	2,500	5,000
110.B5 Hand Brake Shaft Welded or Wrong Dimension	2,500	5,000
110.B6 Hand Brake Shaft Not Retained in Operating Position	2,500	5,000
110.B8 Hand Brake or Hand Brake Parts Wrong Design	2,500	5,000
114.B2 Hand Brake Wheel or Lever Has Insufficient Clearance Around Rim or Handle	2,500	5,000
114.B3 Hand Brake Wheel/Lever Clearance Insufficient to Vertical Plane Through Inside Face of Knuckle	2,500	5,000
120.A1 Brake Step Missing Except by Design	5,000	7,500
120.A2 Brake Step or Brace Broken or Decayed	2,500	5,000
120.A3 Brake Step or Brace Loose	2,500	5,000
120.B1 Brake Step or Brace Bent	2,500	5,000
120.B2 Brake Step or Wrong Dimensions	2,500	5,000
120.C1 Brake Step Improperly Applied	2,500	5,000
120.C2 Brake Step Improperly Located	2,500	5,000
120.C3 Brake Step With Less Than 4″ Clearance to Vertical Plane Through Inside Face of Knuckle	2,500	5,000
120.C4 Brake Step Obstructed or Otherwise Unsafe	2,500	5,000
124.A1 Running Board Missing or Part Missing Except By Design	5,000	7,500
124.A2 Running Board Broken or Decayed	5,000	7,500
124.A3 Running Board Loose Presents a Tripping Hazard or Other Unsafe Condition	2,500	5,000
124.A4 Running Board Wrong Material	2,500	5,000
124.B1 Running Board Bent to the Extent that It is Unsafe	2,500	5,000
124.B2 Running Board Wrong Dimensions	2,500	5,000
124.B3 Running Board Wrong Location	2,500	5,000
124.C1 Running Board Improperly Applied	2,500	5,000
124.C2 Running Board Obstructed	2,500	5,000
126.A1 End Platform Missing or Part Except By Design	5,000	7,500
126.A2 End Platform Broken or Decayed	5,000	7,500
126.A3 End Platform Loose	2,500	5,000
126.B1 End Platform or Brace Bent	2,500	5,000
126.B2 End Platform Wrong Dimensions	2,500	5,000
126.C1 End Platform Improperly Applied	2,500	5,000
126.C2 End Platform With Less Than Required Clearance to Vertical Plane Through Inside Knuckle	2,500	5,000
126.C3 End Platform Improperly Located	2,500	5,000
126.C4 End Platform Obstructed	5,000	7,500
128.A1 Platform or Switching Step Missing	5,000	7,500
128.A2 Platform or Switching Step Broken or Decayed	5,000	7,500
128.A3 Platform or Switching Step Loose	2,500	5,000
128.B1 Platform or Switching Step Bent	2,500	5,000
128.B2 Platform or Switching Step Does Not Meet the Required Location or Dimensions	2,500	5,000
128.C1 Platform or Switching Step Improperly Applied or Repaired	2,500	5,000
128.C2 Platform or Switching Step Obstructed	2,500	5,000
128.D1 Switching Step Back Stop or Kick Plate Missing	2,500	5,000

[1] A penalty may be assessed against an individual only for a willful violation. The Administrator reserves the right to assess a penalty of up to $27,000 for any violation where circumstances warrant. See 49 CFR part 209, appendix A.

[2] This schedule uses section numbers from FRA's Safety Appliance Defect Code, a restatement of the CFR text in a reorganized format. For convenience, and as an exception to FRA's general policy, penalty citations will cite the defect code rather than the CFR. FRA reserves the right, should litigation become necessary, to substitute in its complaint the CFR and/or statutory citation in place of the defect code section cited in the penalty demand letter.

FRA safety appliance defect code section[2]	Violation	Willful violation
128.D2 Switching Step Not Illuminated When Required	2,500	5,000
128.D3 Non-Illuminated Step Not Painted Contrasting Color	1,000	2,000
130.A1 Sill Step or Additional Tread, Missing	5,000	7,500
130.A2 Sill Step or Additional Tread, Broken	5,000	7,500
130.A3 Sill Step or Additional Tread, Loose	2,500	5,000
130.B1 Sill Step or Additional Tread, Bent	2,500	5,000
130.B2 Sill Step or Additional Tread, Having Wrong Dimensions or Improperly Located	2,500	5,000
130.B3 Sill Step Improperly Applied	2,500	5,000
132.A1 Side Missing Step	5,000	7,500
132.A2 Side Door Step Broken	5,000	7,500
132.A3 Side Door Step Loose	2,500	5,000
132.B1 Side Door Step Bent	2,500	5,000
132.B2 Side Door Step Having Wrong Dimensions	2,500	5,000
134.A1 Ladder Missing	5,000	7,500
134.A2 Ladder Broken	5,000	7,500
134.A3 Ladder Loose	2,500	5,000
134.B1 Ladder Bent	2,500	5,000
134.B2 Ladder Having Wrong Dimensions	2,500	5,000
134.C1 Ladder Improperly Applied	2,500	5,000
134.C2 Ladder Having Insufficient Clearance or Improperly Located	2,500	5,000
134.C3 Ladder Wrong Design	2,500	5,000
134.C4 Ladder Wrong Material	2,500	5,000
134.D1 End Clearance Insufficient	2,500	5,000
136.A1 Ladder Tread or Handholds Missing	5,000	7,500
136.A2 Ladder Tread or Handhold Broken	5,000	7,500
136.A3 Ladder Tread or Handhold Loose Except By Design	2,500	5,000
136.B1 Ladder Tread or Handhold Bent to The Extent That It May Be Unsafe	2,500	5,000
136.B2 Ladder Tread or Handhold Wrong Dimensions	2,500	5,000
136.C1 Ladder Tread or Handhold Improperly Applied	2,500	5,000
136.C2 Ladder Tread or Handhold Having Wrong Clearance	2,500	5,000
136.C3 Ladder or Handhold Improperly Located	2,500	5,000
136.C4 Ladder Tread or Handhold Obstructed	2,500	5,000
136.C5 Ladder Tread Without Footguards	2,500	5,000
138.A1 Hand or Safety Railing Missing	5,000	7,500
138.A2 Hand or Safety Railing Broken	5,000	7,500
138.A3 Hand or Safety Railing Loose Except by Design	2,500	5,000
138.B1 Hand or Safety Railing Bent	2,500	5,000
138.B2 Hand or Safety Railing Wrong Dimensions	2,500	5,000
138.C1 Hand or Safety Railing Improperly Applied	2,500	5,000
138.C2 Hand or Safety Railing Having Less Than the Required Clearance	2,500	5,000
138.C3 Hand or Safety Railing Improperly Located	2,500	5,000
140.A1 Uncoupling Lever Missing	2,500	5,000
140.A2 Uncoupling Lever Broken or Disconnected	2,500	5,000
140.B1 Uncoupling Lever Bent Will not Safely and Reasonably Function As Intended	2,500	5,000
140.C1 Uncoupling Lever Bracket Bent Lever Will Not Function Properly	2,500	5,000
140.C2 Uncoupling Lever Bracket Broken or Missing	2,500	5,000
140.D1 Uncoupling Lever Wrong Dimension	2,500	5,000
140.D2 Uncoupling Lever With Improper Handle Clearance	2,500	5,000
144.A1 Coupler Missing	5,000	7,500
144.B1 Coupler Height Incorrect	2,500	5,000
144.C1 Coupler Inoperative	2,500	5,000
145.A1 Kick Plates Missing	2,500	5,000
145.A2 Kick Plates Broken	2,500	5,000
145.B1 Kick Plates Wrong Dimensions	2,500	5,000
145.B2 Kick Plates Improper Clearance	2,500	5,000
145.B3 Kick Plates Insecure Or Improperly Applied	2,500	5,000
146.A Notice or Stencil not Posted on Cabooses with Running Boards Removed	500	1,000
146.B Safe Means not Provided to Clean or Maintain Windows of Caboose	1,000	2,000
231.31 Drawbars, standard height	2,500	5,000

[53 FR 52933, Dec. 29, 1988, as amended at 63 FR 11623, Mar. 10, 1998; 66 FR 4193, Jan. 17, 2001]

PART 232—BRAKE SYSTEM SAFETY STANDARDS FOR FREIGHT AND OTHER NON-PASSENGER TRAINS AND EQUIPMENT; END-OF-TRAIN DEVICES

Subpart A—General

Sec.
232.1 Scope.
232.3 Applicability.
232.5 Definitions.
232.7 Waivers.
232.9 Responsibility for compliance.
232.11 Penalties.
232.13 Preemptive effect.
232.15 Movement of defective equipment.
232.17 Special approval procedure.
232.19 Availability of records.
232.21 Information collection.

Subpart B—General Requirements

232.101 Scope.
232.103 General requirements for all train brake systems.
232.105 General requirements for locomotives.
232.107 Air source requirements and cold weather operations.
232.109 Dynamic brake requirements.
232.111 Train handling information.

Subpart C—Inspection and Testing Requirements

232.201 Scope.
232.203 Training requirements.
232.205 Class I brake tests—initial terminal inspection.
232.207 Class IA brake tests—1,000-mile inspection.
232.209 Class II brake tests—intermediate inspection.
232.211 Class III brake tests—trainline continuity inspection.
232.213 Extended haul trains.
232.215 Transfer train brake tests.
232.217 Train brake tests conducted using yard air.
232.219 Double heading and helper service.

Subpart D—Periodic Maintenance and Testing Requirements

232.301 Scope.
232.303 General requirements.
232.305 Single car air brake tests.
232.307 Modification of the single car air brake test procedures.
232.309 Equipment and devices used to perform single car air brake tests.

Subpart E—End-of-Train Devices

232.401 Scope.
232.403 Design standards for one-way end-of-train devices.
232.405 Design and performance standards for two-way end-of-train devices.
232.407 Operations requiring use of two-way end-of-train devices; prohibition on purchase of nonconforming devices.
232.409 Inspection and testing of end-of-train devices.

Subpart F—Introduction of New Brake System Technology

232.501 Scope.
232.503 Process to introduce new brake system technology.
232.505 Pre-revenue service acceptance testing plan.

APPENDIX A TO PART 232—SCHEDULE OF CIVIL PENALTIES

APPENDIX B TO PART 232—PART 232 PRIOR TO MAY 31, 2001 AS CLARIFIED EFFECTIVE APRIL 10, 2002

AUTHORITY: 49 U.S.C. 20102–20103, 20107, 20133, 20141, 20301–20303, 20306, 21301–21302, 21304; 28 U.S.C. 2461, note; and 49 CFR 1.49.

SOURCE: 66 FR 4193, Jan. 17, 2001, unless otherwise noted.

Subpart A—General

§ 232.1 Scope.

(a) This part prescribes Federal safety standards for freight and other non-passenger train brake systems and equipment. Subpart E of this part prescribes Federal safety standards not only for freight and other non-passenger train brake systems and equipment, but also for passenger train brake systems. This part does not restrict a railroad from adopting or enforcing additional or more stringent requirements not inconsistent with this part.

(b) Except as otherwise specifically provided in this paragraph or in this part, railroads to which this part applies shall comply with all the requirements contained in subparts A through C and subpart F of this part beginning on April 1, 2004. Sections 232.1 through 232.13 and 232.17 through 232.21 of this part will become applicable to all railroads to which this part applies beginning on May 31, 2001. Subpart D of this part will become applicable to all railroads to which this part applies beginning on August 1, 2001. Subpart E of this part will become applicable to all trains operating on track which is part

of the general railroad system of transportation beginning on May 31, 2001.

(c) A railroad may request earlier application of the requirements contained in subparts A through C and subpart F of this part upon written notification to FRA's Associate Administrator for Safety. Such a request shall indicate the railroad's readiness and ability to comply with all of the requirements contained in those subparts.

(d) Except for operations identified in § 232.3(c)(1), (c)(4), and (c)(6) through (c)(8), all railroads which are part of the general railroad system of transportation shall operate pursuant to the requirements contained in this part 232 as it existed on May 31, 2001 and included as Appendix B to this part until they are either required to operate pursuant to the requirements contained in this part or the requirements contained in part 238 of this chapter or they elect to comply earlier than otherwise required with the requirements contained in this part or the requirements contained in part 238 of this chapter.

[66 FR 4193, Jan. 17, 2001, as amended at 66 FR 9906, Feb. 12, 2001]

§ 232.3 Applicability.

(a) Except as provided in paragraphs (b) and (c) of this section, this part applies to all railroads that operate freight or other non-passenger train service on standard gage track which is part of the general railroad system of transportation. This includes the operation of circus trains and private cars when hauled on such railroads.

(b) Subpart E of this part, ''End-of-Train Devices,'' applies to all trains operating on track which is part of the general railroad system of transportation unless specifically excepted in that subpart.

(c) Except as provided in § 232.1(d) and paragraph (b) of this section, this part does *not* apply to:

(1) A railroad that operates only on track inside an installation that is not part of the general railroad system of transportation.

(2) Intercity or commuter passenger train operations on standard gage track which is part of the general railroad system of transportation;

(3) Commuter or other short-haul rail passenger train operations in a metropolitan or suburban area (as described by 49 U.S.C. 20102(1)), including public authorities operating passenger train service;

(4) Rapid transit operations in an urban area that are not connected with the general railroad system of transportation;

(5) Tourist, scenic, historic, or excursion operations, whether on or off the general railroad system;

(6) Freight and other non-passenger trains of four-wheel coal cars;

(7) Freight and other non-passenger trains of eight-wheel standard logging cars if the height of each car from the top of the rail to the center of the coupling is not more than 25 inches; or

(8) A locomotive used in hauling a train referred to in paragraph (c)(7) of this subsection when the locomotive and cars of the train are used only to transport logs.

(d) The provisions formerly contained in Interstate Commerce Commission Order 13528, of May 30, 1945, as amended, now revoked, are codified in this paragraph. This part is not applicable to the following equipment:

(1) Scale test weight cars.

(2) Locomotive cranes, steam shovels, pile drivers, and machines of similar construction, and maintenance machines built prior to September 21, 1945.

(3) Export, industrial, and other cars not owned by a railroad which are not to be used in service, except for movement as shipments on their own wheels to given destinations. Such cars shall be properly identified by a card attached to each side of the car, signed by the shipper, stating that such movement is being made under the authority of this paragraph.

(4) Industrial and other than railroad-owned cars which are not to be used in service except for movement within the limits of a single switching district (i.e., within the limits of an industrial facility).

(5) Narrow-gage cars.

(6) Cars used exclusively in switching operations and not used in train movements within the meaning of the Federal safety appliance laws (49 U.S.C. 20301–20306).

§ 232.5 Definitions.

The definitions in this section are intended to clarify the meaning of terms used in this part as it becomes applicable pursuant to § 232.1(b) and (c).

AAR means the Association of American Railroads.

Air brake means a combination of devices operated by compressed air, arranged in a system, and controlled manually, electrically, electronically, or pneumatically, by means of which the motion of a railroad car or locomotive is retarded or arrested.

Air Flow Indicator, AFM means a specific air flow indicator required by the air flow method of qualifying train air brakes (AFM). The AFM Air Flow Indicator is a calibrated air flow measuring device which is clearly visible and legible in daylight and darkness from the engineer's normal operating position. The indicator face displays:

(1) Markings from 10 cubic feet per minute (CFM) to 80 CFM, in increments of 10 CFM or less; and

(2) Numerals indicating 20, 40, 60, and 80 CFM for continuous monitoring of air flow.

Bind means restrict the intended movement of one or more brake system components by reduced clearance, by obstruction, or by increased friction.

Brake, dynamic means a train braking system whereby the kinetic energy of a moving train is used to generate electric current at the locomotive traction motors, which is then dissipated through resistor grids or into the catenary or third rail system.

Brake, effective means a brake that is capable of producing its nominally designed retarding force on the train. A car's air brake is not considered effective if it is not capable of producing its nominally designed retarding force or if its piston travel exceeds:

(1) 10½ inches for cars equipped with nominal 12-inch stroke brake cylinders; or

(2) The piston travel limit indicated on the stencil, sticker, or badge plate for that brake cylinder.

Brake, hand means a brake that can be applied and released by hand to prevent or retard the movement of a locomotive.

Brake indicator means a device which indicates the brake application range and indicates whether brakes are applied and released.

Brake, inoperative means a primary brake that, for any reason, no longer applies or releases as intended.

Brake, inoperative dynamic means a dynamic brake that, for any reason, no longer provides its designed retarding force on the train.

Brake, parking means a brake that can be applied by means other than by hand, such as spring, hydraulic, or air pressure when the brake pipe air is depleted, or by an electrical motor.

Brake pipe means the system of piping (including branch pipes, angle cocks, cutout cocks, dirt collectors, hoses, and hose couplings) used for connecting locomotives and all railroad cars for the passage of compressed air.

Brake, primary means those components of the train brake system necessary to stop the train within the signal spacing distance without thermal damage to friction braking surfaces.

Brake, secondary means those components of the train brake system which develop supplemental brake retarding force that is not needed to stop the train within signal spacing distances or to prevent thermal damage to wheels.

Emergency application means an irretrievable brake application resulting in the maximum retarding force available from the train brake system.

End-of-train device, one-way means two pieces of equipment linked by radio that meet the requirements of § 232.403.

End-of-train device, two-way means two pieces of equipment linked by radio that meet the requirements of §§ 232.403 and 232.405.

Foul means any condition which restricts the intended movement of one or more brake system components because the component is snagged, entangled, or twisted.

Freight car means a vehicle designed to carry freight, or railroad personnel, by rail and a vehicle designed for use in a work or wreck train or other non-passenger train.

Initial terminal means the location where a train is originally assembled.

Locomotive means a piece of railroad on-track equipment, other than hi-rail, specialized maintenance, or other similar equipment, which may consist of

one or more units operated from a single control stand—

(1) With one or more propelling motors designed for moving other railroad equipment;

(2) With one or more propelling motors designed to transport freight or passenger traffic or both; or

(3) Without propelling motors but with one or more control stands.

Locomotive cab means that portion of the superstructure designed to be occupied by the crew operating the locomotive.

Locomotive, controlling means the locomotive from which the engineer exercises control over the train.

Off air means not connected to a continuous source of compressed air of at least 60 pounds per square inch (psi).

Ordered date or date ordered means the date on which notice to proceed is given by a procuring railroad to a contractor or supplier for new equipment.

Piston travel means the amount of linear movement of the air brake hollow rod (or equivalent) or piston rod when forced outward by movement of the piston in the brake cylinder or actuator and limited by the brake shoes being forced against the wheel or disc.

Pre-revenue service acceptance testing plan means a document, as further specified in § 232.505, prepared by a railroad that explains in detail how pre-revenue service tests of certain equipment demonstrate that the equipment meets Federal safety standards and the railroad's own safety design requirements.

Previously tested equipment means equipment that has received a Class I brake test pursuant to § 232.205 and has not been off air for more than four hours.

Primary responsibility means the task that a person performs at least 50 percent of the time. The totality of the circumstances will be considered on a case-by-case basis in circumstances where an individual does not spend 50 percent of the day engaged in any one readily identifiable type of activity.

Qualified mechanical inspector means a qualified person who has received, as a part of the training, qualification, and designation program required under § 232.203, instruction and training that includes ''hands-on'' experience (under appropriate supervision or apprenticeship) in one or more of the following functions: troubleshooting, inspection, testing, maintenance or repair of the specific train brake components and systems for which the person is assigned responsibility. This person shall also possess a current understanding of what is required to properly repair and maintain the safety-critical brake components for which the person is assigned responsibility. Further, the qualified mechanical inspector shall be a person whose primary responsibility includes work generally consistent with the functions listed in this definition.

Qualified person means a person who has received, as a part of the training, qualification, and designation program required under § 232.203, instruction and training necessary to perform one or more functions required under this part. The railroad is responsible for determining that the person has the knowledge and skills necessary to perform the required function for which the person is assigned responsibility. The railroad determines the qualifications and competencies for employees designated to perform various functions in the manner set forth in this part. Although the rule uses the term ''qualified person'' to describe a person responsible for performing various functions required under this part, a person may be deemed qualified to perform some functions but not qualified to perform other functions. For example, although a person may be deemed qualified to perform the Class II/intermediate brake test required by this part, that same person may or may not be deemed qualified to perform the Class I/initial Terminal brake test or authorize the movement of defective equipment under this part. The railroad will determine the required functions for which an individual will be deemed a ''qualified person'' based upon the instruction and training the individual has received pursuant to § 232.203 concerning a particular function.

Railroad means any form of non-highway ground transportation that runs on rails or electromagnetic guideways, including:

(1) Commuter or short-haul railroad passenger service in a metropolitan or suburban area and commuter railroad service that was operated by the Consolidated Rail Corporation on January 1, 1979; and

(2) High speed ground transportation systems that connect metropolitan areas, without regard to whether those systems use new technologies not associated with traditional railroads. The term ''railroad'' is also intended to mean a person that provides transportation by railroad, whether directly or by contracting out operation of the railroad to another person. The term does not include rapid transit operations in an urban area that are not connected to the general railroad system of transportation.

Rebuilt equipment means equipment that has undergone overhaul identified by the railroad as a capital expense under the Surface Transportation Board's accounting standards.

Refresher training means periodic retraining required for employees or contractors to remain qualified to perform specific equipment troubleshooting, inspection, testing, maintenance, or repair functions.

Respond as intended means to produce the result that a device or system is designed to produce.

''Roll-by'' inspection means an inspection performed while equipment is moving.

Service application means a brake application that results from one or more service reductions or the equivalent.

Service reduction means a decrease in brake pipe pressure, usually from 5 to 25 psi at a rate sufficiently rapid to move the operating valve to service position, but at a rate not rapid enough to move the operating valve to emergency position.

Solid block of cars means two or more freight cars coupled together and added to or removed from a train as a single unit.

State inspector means an inspector of a participating State rail safety program under part 212 of this chapter.

Switching service means the classification of freight cars according to commodity or destination; assembling of cars for train movements; changing the position of cars for purposes of loading, unloading, or weighing; placing of locomotives and cars for repair or storage; or moving of rail equipment in connection with work service that does not constitute a train movement.

Tourist, scenic, historic, or excursion operations are railroad operations that carry passengers, often using antiquated equipment, with the conveyance of the passengers to a particular destination not being the principal purpose.

Train means one or more locomotives coupled with one or more freight cars, except during switching service.

Train line means the brake pipe or any non-pneumatic system used to transmit the signal that controls the locomotive and freight car brakes.

Train, unit or *train, cycle* means a train that, except for the changing of locomotive power and the removal or replacement of defective equipment, remains coupled as a consist and continuously operates from location A to location B and back to location A.

Transfer train means a train that travels between a point of origin and a point of final destination not exceeding 20 miles. Such trains may pick up or deliver freight equipment while en route to destination.

Yard air means a source of compressed air other than from a locomotive.

[66 FR 4193, Jan. 17, 2001, as amended at 67 FR 17580, Apr. 10, 2002]

§ 232.7 Waivers.

(a) Any person subject to a requirement of this part may petition the Administrator for a waiver of compliance with such requirement. The filing of such a petition does not affect that person's responsibility for compliance with that requirement while the petition is being considered.

(b) Each petition for waiver must be filed in the manner and contain the information required by part 211 of this chapter.

(c) If the Administrator finds that a waiver of compliance is in the public interest and is consistent with railroad safety, the Administrator may grant the waiver subject to any conditions the Administrator deems necessary. If a waiver is granted, the Administrator

publishes a notice in the FEDERAL REGISTER containing the reasons for granting the waiver.

§ 232.9 Responsibility for compliance.

(a) A railroad subject to this part shall not use, haul, permit to be used or hauled on its line, offer in interchange, or accept in interchange any train, railroad car, or locomotive with one or more conditions not in compliance with this part; however, a railroad shall not be liable for a civil penalty for such action if such action is in accordance with § 232.15. For purposes of this part, a train, railroad car, or locomotive will be considered in use prior to departure but after it has received, or should have received, the inspection required for movement and is deemed ready for service.

(b) Although many of the requirements of this part are stated in terms of the duties of a railroad, when any person performs any function required by this part, that person (whether or not a railroad) is required to perform that function in accordance with this part.

(c) Any person performing any function or task required by this part shall be deemed to have consented to FRA inspection of the person's operation to the extent necessary to determine whether the function or task is being performed in accordance with the requirements of this part.

§ 232.11 Penalties.

(a) Any person (including but not limited to a railroad; any manager, supervisor, official, or other employee or agent of a railroad; any owner, manufacturer, lessor, or lessee of railroad equipment, track, or facilities; any employee of such owner, manufacturer, lessor, lessee, or independent contractor) who violates any requirement of this part or causes the violation of any such requirement is subject to a civil penalty of at least $550, but not more than $16,000 per violation, except that: Penalties may be assessed against individuals only for willful violations, and, where a grossly negligent violation or a pattern of repeated violations has created an imminent hazard of death or injury to persons, or has caused death or injury, a penalty not to exceed $27,000 per violation may be assessed. Each day a violation continues shall constitute a separate offense. Appendix A to this part contains a schedule of civil penalty amounts used in connection with this rule.

(b) Any person who knowingly and willfully falsifies a record or report required by this part is subject to criminal penalties under 49 U.S.C. 21311.

[66 FR 4193, Jan. 17, 2001, as amended at 69 FR 30594, May 28, 2004; 72 FR 51197, Sept. 6, 2007]

§ 232.13 Preemptive effect.

(a) Under 49 U.S.C. 20106, issuance of the regulations in this part preempts any State law, rule, regulation, order, or standard covering the same subject matter, except for a provision necessary to eliminate or reduce a local safety hazard if that provision is not incompatible with this part and does not impose an undue burden on interstate commerce.

(b) Preemption should also be considered pursuant to the Locomotive Boiler Inspection Act (now codified at 49 U.S.C. 20701–20703), the Safety Appliance Acts (now codified at 49 U.S.C. 20301–20304), and the Commerce Clause based on the relevant case law pertaining to preemption under those provisions.

(c) FRA does not intend by issuance of the regulations in this part to preempt provisions of State criminal law that impose sanctions for reckless conduct that leads to actual loss of life, injury, or damage to property, whether such provisions apply specifically to railroad employees or generally to the public at large.

§ 232.15 Movement of defective equipment.

(a) *General provision*. Except as provided in paragraph (c) of this section, a railroad car or locomotive with one or more conditions not in compliance with this part may be used or hauled without civil penalty liability under this part only if *all* of the following conditions are met:

(1) The defective car or locomotive is properly equipped in accordance with the applicable provisions of 49 U.S.C. chapter 203 and the requirements of this part.

(2) The car or locomotive becomes defective while it is being used by the railroad on its line or becomes defective on the line of a connecting railroad and is properly accepted in interchange for repairs in accordance with paragraph (a)(7) of this section.

(3) The railroad first discovers the defective condition of the car or locomotive prior to moving it for repairs.

(4) The movement of the defective car or locomotive for repairs is from the location where the car or locomotive is first discovered defective by the railroad.

(5) The defective car or locomotive cannot be repaired at the location where the railroad first discovers it to be defective.

(6) The movement of the car or locomotive is necessary to make repairs to the defective condition.

(7) The location to which the car or locomotive is being taken for repair is the nearest available location where necessary repairs can be performed on the line of the railroad where the car or locomotive was first found to be defective or is the nearest available location where necessary repairs can be performed on the line of a connecting railroad if:

(i) The connecting railroad elects to accept the defective car or locomotive for such repair; and

(ii) The nearest available location where necessary repairs can be performed on the line of the connecting railroad is no farther than the nearest available location where necessary repairs can be performed on the line of the railroad where the car or locomotive was found defective.

(8) The movement of the defective car or locomotive for repairs is not by a train required to receive a Class I brake test at that location pursuant to § 232.205.

(9) The movement of the defective car or locomotive for repairs is not in a train in which less than 85 percent of the cars have operative and effective brakes.

(10) The defective car or locomotive is tagged, or information is recorded, as prescribed in paragraph (b) of this section.

(11) Except for cars or locomotives with brakes cut out en route, the following additional requirements are met:

(i) A qualified person shall determine—

(A) That it is safe to move the car or locomotive; and

(B) The maximum safe speed and other restrictions necessary for safely conducting the movement.

(ii) The person in charge of the train in which the car or locomotive is to be moved shall be notified in writing and inform all other crew members of the presence of the defective car or locomotive and the maximum speed and other restrictions determined under paragraph (a)(11)(i)(B) of this section. A copy of the tag or card described in paragraph (b) of this section may be used to provide the notification required by this paragraph.

(iii) The defective car or locomotive is moved in compliance with the maximum speed and other restrictions determined under paragraph (a)(11)(i)(B) of this section.

(12) The defective car or locomotive is not subject to a Special Notice for Repair under part 216 of this chapter, unless the movement of the defective car is made in accordance with the restrictions contained in the Special Notice.

(b) *Tagging of defective equipment.* (1) At the place where the railroad first discovers the defect, a tag or card shall be placed on both sides of the defective equipment, except that defective locomotives may have the tag or card placed in the cab of the locomotive. In lieu of a tag or card, an automated tracking system approved for use by FRA shall be provided. The tag, card, or automated tracking system shall contain the following information about the defective equipment:

(i) The reporting mark and car or locomotive number;

(ii) The name of the inspecting railroad;

(iii) The name and job title of the inspector;

(iv) The inspection location and date;

(v) The nature of each defect;

(vi) A description of any movement restrictions;

(vii) The destination where the equipment will be repaired; and

(viii) The signature, or electronic identification, of the person reporting the defective condition.

(2) The tag or card required by paragraph (b)(1) of this section shall remain affixed to the defective equipment until the necessary repairs have been performed.

(3) An electronic or written record or a copy of each tag or card attached to or removed from a car or locomotive shall be retained for 90 days and, upon request, shall be made available within 15 calendar days for inspection by FRA or State inspectors.

(4) Each tag or card removed from a car or locomotive shall contain the date, location, reason for its removal, and the signature of the person who removed it from the piece of equipment.

(5) Any automated tracking system approved by FRA to meet the tagging requirements contained in paragraph (b)(1) of this section shall be capable of being reviewed and monitored by FRA at any time to ensure the integrity of the system. FRA's Associate Administrator for Safety may prohibit or revoke a railroad's authority to utilize an approved automated tracking system in lieu of tagging if FRA finds that the automated tracking system is not properly secure, is inaccessible to FRA or a railroad's employees, or fails to adequately track and monitor the movement of defective equipment. FRA will record such a determination in writing, include a statement of the basis for such action, and provide a copy of the document to the railroad.

(c) *Movement for unloading or purging of defective cars.* If a defective car is loaded with a hazardous material or contains residue of a hazardous material, the car may not be placed for unloading or purging unless unloading or purging is consistent with determinations made and restrictions imposed under paragraph (a)(11)(i) of this section and the unloading or purging is necessary for the safe repair of the car.

(d) *Computation of percent operative power brakes.* (1) The percentage of operative power brakes in a train shall be based on the number of control valves in the train. The percentage shall be determined by dividing the number of control valves that are cut-in by the total number of control valves in the train. A control valve shall not be considered cut-in if the brakes controlled by that valve are inoperative. Both cars and locomotives shall be considered when making this calculation.

(2) The following brake conditions not in compliance with this part are not considered inoperative power brakes for purposes of this section:

(i) Failure or cutting out of secondary brake systems;

(ii) Inoperative or otherwise defective handbrakes or parking brakes;

(iii) Piston travel that is in excess of the Class I brake test limits required in § 232.205 but that does not exceed the outside limits contained on the stencil, sticker, or badge plate required by § 232.103(g) for considering the power brakes to be effective; and

(iv) Power brakes overdue for inspection, testing, maintenance, or stenciling under this part.

(e) *Placement of equipment with inoperative brakes.* (1) A freight car or locomotive with inoperative brakes shall not be placed as the rear car of the train.

(2) No more than two freight cars with either inoperative brakes or not equipped with power brakes shall be consecutively placed in the same train.

(3) Multi-unit articulated equipment shall not be placed in a train if the equipment has more than two consecutive individual control valves cut-out or if the brakes controlled by the valves are inoperative.

(f) *Guidelines for determining locations where necessary repairs can be performed.* The following guidelines will be considered by FRA when determining whether a location is a location where repairs to a car's brake system or components can be performed and whether a location is the nearest location where the needed repairs can be effectuated.

(1) The following general factors and guidelines will be considered when making determinations as to whether a location is a location where brake repairs can be performed:

(i) The accessibility of the location to persons responsible for making repairs;

(ii) The presence of hazardous conditions that affect the ability to safely make repairs of the type needed at the location;

(iii) The nature of the repair necessary to bring the car into compliance;

(iv) The need for railroads to have in place an effective means to ensure the safe and timely repair of equipment;

(v) The relevant weather conditions at the location that affect accessibility or create hazardous conditions;

(vi) A location need not have the ability to effectuate every type of brake system repair in order to be considered a location where some brake repairs can be performed;

(vii) A location need not be staffed continuously in order to be considered a location where brake repairs can be performed;

(viii) The ability of a railroad to perform repair track brake tests or single car tests at a location shall not be considered; and

(ix) The congestion of work at a location shall not be considered

(2) The general factors and guidelines outlined in paragraph (f)(1) of this section should be applied to the following locations:

(i) A location where a mobile repair truck is used on a regular basis;

(ii) A location where a mobile repair truck originates or is permanently stationed;

(iii) A location at which a railroad performs mechanical repairs other than brake system repairs; and

(iv) A location that has an operative repair track or repair shop;

(3) In determining whether a location is the nearest location where the necessary brake repairs can be made, the distance to the location is a key factor but should not be considered the determining factor. The distance to a location must be considered in conjunction with the factors and guidance outlined in paragraphs (f)(1) and (f)(2) of this section. In addition, the following safety factors must be considered in order to optimize safety:

(i) The safety of the employees responsible for getting the equipment to or from a particular location; and

(ii) The potential safety hazards involved with moving the equipment in the direction of travel necessary to get the equipment to a particular location.

(g) *Designation of repair locations.* Based on the guidance detailed in paragraph (f) of this section and consistent with other requirements contained in this part, a railroad may submit a detailed petition, pursuant to the special approval procedures contained in § 232.17, containing a plan designating locations where brake system repairs will be performed. Approval of such plans shall be made accordance with the procedures contained in § 232.17, and shall be subject to any modifications determined by FRA to be necessary to ensure consistency with the requirements and guidance contained in this part.

[66 FR 4193, Jan. 17, 2001, as amended at 67 FR 17580, Apr. 10, 2002]

§ 232.17 Special approval procedure.

(a) *General.* The following procedures govern consideration and action upon requests for special approval of a plan under § 232.15(g), an alternative standard under § 232.305, and for special approval of pre-revenue service acceptance testing plans under subpart F of this part.

(b) *Petitions for special approval of a plan or an alternative standard.* Each petition for special approval of a plan under § 232.15(g) or an alternative standard shall contain:

(1) The name, title, address, and telephone number of the primary person to be contacted with regard to review of the petition;

(2) The proposed plan pursuant to § 232.15(g) or the proposed alternative standard, in detail, to be substituted for the particular requirement of this part;

(3) Appropriate data or analysis, or both, for FRA to consider in determining whether the plan is consistent with the guidance contained in § 232.15(f) and the requirements of this part or whether the alternative standard will provide at least an equivalent level of safety; and

(4) A statement affirming that the railroad has served a copy of the petition on designated representatives of its employees, together with a list of the names and addresses of the persons served.

(c) *Petitions for special approval of pre-revenue service acceptance testing plan.* Each petition for special approval of a

pre-revenue service acceptance testing plan shall contain:

(1) The name, title, address, and telephone number of the primary person to be contacted with regard to review of the petition; and

(2) The elements prescribed in § 232.505.

(d) *Service*. (1) Each petition for special approval under paragraph (b) or (c) of this section shall be submitted in triplicate to the Associate Administrator for Safety, Federal Railroad Administration, 400 7th Street, SW., Washington, DC 20590.

(2) Service of each petition for special approval of a plan or an alternative standard submitted under paragraph (b) of this section shall be made on the following:

(i) Designated representatives of the employees of the railroad submitting a plan pursuant to § 232.15(g) or designated representatives of the employees responsible for the equipment's operation, inspection, testing, and maintenance under this part;

(ii) Any organizations or bodies that either issued the standard incorporated in the section(s) of the rule to which the special approval pertains or issued the alternative standard that is proposed in the petition; and

(iii) Any other person who has filed with FRA a current statement of interest in reviewing special approvals under the particular requirement of this part at least 30 days but not more than 5 years prior to the filing of the petition. If filed, a statement of interest shall be filed with FRA's Associate Administrator for Safety and shall reference the specific section(s) of this part in which the person has an interest.

(e) *Federal Register notice*. FRA will publish a notice in the FEDERAL REGISTER concerning each petition under paragraph (b) of this section.

(f) *Comment*. Not later than 30 days from the date of publication of the notice in the FEDERAL REGISTER concerning a petition under paragraph (b) of this section, any person may comment on the petition.

(1) A comment shall set forth specifically the basis upon which it is made, and contain a concise statement of the interest of the commenter in the proceeding.

(2) The comment shall be submitted in triplicate to the Associate Administrator for Safety, Federal Railroad Administration, 400 7th Street, SW., Washington, DC 20590.

(3) The commenter shall certify that a copy of the comment was served on each petitioner.

(g) *Disposition of petitions*. (1) If FRA finds that the petition complies with the requirements of this section and that the proposed plan under § 232.15(g), the alternative standard, or the pre-revenue service plan is acceptable and justified, the petition will be granted, normally within 90 days of its receipt. If the petition is neither granted nor denied within 90 days, the petition remains pending for decision. FRA may attach special conditions to the approval of any petition. Following the approval of a petition, FRA may reopen consideration of the petition for cause.

(2) If FRA finds that the petition does not comply with the requirements of this section and that the proposed plan under § 232.15(g), the alternative standard, or the pre-revenue service plan is not acceptable or justified, the petition will be denied, normally within 90 days of its receipt.

(3) When FRA grants or denies a petition, or reopens consideration of the petition, written notice is sent to the petitioner and other interested parties.

[66 FR 4193, Jan. 17, 2001, as amended at 67 FR 17580, Apr. 10, 2002]

§ 232.19 Availability of records.

Except as otherwise provided, the records and plans required by this part shall be made available to representatives of FRA and States participating under part 212 of this chapter for inspection and copying upon request.

§ 232.21 Information Collection.

(a) The information collection requirements of this part were reviewed by the Office of Management and Budget pursuant to the Paperwork Reduction Act of 1995 (44 U.S.C. 3501 et seq.) and are assigned OMB control number 2130–0008.

(b) The information collection requirements are found in the following

sections: §§ 229.27, 231.31, 232.1, 232.3, 232.7, 232.11, 232.15, 232.17, 232.103, 232.105, 232.107, 232.109, 232.111, 232.203, 232.205, 232.207, 232.209, 232.211, 232.213, 232.303, 232.307, 232.309, 232.403, 232.405, 232.407, 232.409, 232.503, 232.505.

Subpart B—General Requirements

§ 232.101 Scope.

This subpart contains general operating, performance, and design requirements for each railroad that operates freight or other non-passenger trains and for specific equipment used in those operations.

§ 232.103 General requirements for all train brake systems.

(a) The primary brake system of a train shall be capable of stopping the train with a service application from its maximum operating speed within the signal spacing existing on the track over which the train is operating.

(b) If the integrity of the train line of a train brake system is broken, the train shall be stopped. If a train line uses other than solely pneumatic technology, the integrity of the train line shall be monitored by the brake control system.

(c) A train brake system shall respond as intended to signals from the train line.

(d) One hundred percent of the brakes on a train shall be effective and operative brakes prior to use or departure from any location where a Class I brake test is required to be performed on the train pursuant to § 232.205.

(e) A train shall not move if less than 85 percent of the cars in that train have operative and effective brakes.

(f) Each car in a train shall have its air brakes in effective operating condition unless the car is being moved for repairs in accordance with § 232.15. The air brakes on a car are not in effective operating condition if its brakes are cut-out or otherwise inoperative or if the piston travel exceeds:

(1) 10½ inches for cars equipped with nominal 12-inch stroke brake cylinders; or

(2) The piston travel limits indicated on the stencil, sticker, or badge plate for the brake cylinder with which the car is equipped.

(g) Except for cars equipped with nominal 12-inch stroke (8½ and 10-inch diameters) brake cylinders, all cars shall have a legible decal, stencil, or sticker affixed to the car or shall be equipped with a badge plate displaying the permissible brake cylinder piston travel range for the car at Class I brake tests and the length at which the piston travel renders the brake ineffective, if different from Class I brake test limits. The decal, stencil, sticker, or badge plate shall be located so that it may be easily read and understood by a person positioned safely beside the car.

(h) All equipment ordered on or after August 1, 2002, or placed in service for the first time on or after April 1, 2004, shall have train brake systems designed so that an inspector can observe from a safe position either the piston travel, an accurate indicator which shows piston travel, or any other means by which the brake system is actuated. The design shall not require the inspector to place himself or herself on, under, or between components of the equipment to observe brake actuation or release.

(i) All trains shall be equipped with an emergency application feature that produces an irretrievable stop, using a brake rate consistent with prevailing adhesion, train safety, and brake system thermal capacity. An emergency application shall be available at all times, and shall be initiated by an unintentional parting of the train line or loss of train brake communication.

(j) A railroad shall set the maximum main reservoir working pressure.

(k) The maximum brake pipe pressure shall not be greater than 15 psi less than the air compressor governor starting or loading pressure.

(l) Except as otherwise provided in this part, all equipment used in freight or other non-passenger trains shall, at a minimum, meet the Association of American Railroads (AAR) Standard S–469–47, ''Performance Specification for Freight Brakes,'' contained in the AAR *Manual of Standards and Recommended Practices, Section E* (April 1, 1999). The incorporation by reference of this AAR standard was approved by the Director of the Federal Register in accordance

with 5 U.S.C. 552(a) and 1 CFR part 51. You may obtain a copy of the incorporated document from the Association of American Railroads, 50 F Street, NW, Washington, DC. 20001. You may inspect a copy of the document at the Federal Railroad Administration, Docket Clerk, 1120 Vermont Avenue, NW, Suite 7000, Washington, DC or at the National Archives and Records Administration (NARA). For information on the availability of this material at NARA, call 202–741–6030, or go to: *http://www.archives.gov/federal_register/code_of_federal_regulations/ibr_locations.html*.

(m) If a train qualified by the Air Flow Method as provided for in subpart C of this part experiences a brake pipe air flow of greater than 60 CFM or brake pipe gradient of greater than 15 psi while en route and the movable pointer does not return to those limits within a reasonable time, the train shall be stopped at the next available location and be inspected for leaks in the brake system.

(n) *Securement of unattended equipment*. A train's air brake shall not be depended upon to hold equipment standing unattended on a grade (including a locomotive, a car, or a train whether or not locomotive is attached). For purposes of this section, ''unattended equipment'' means equipment left standing and unmanned in such a manner that the brake system of the equipment cannot be readily controlled by a qualified person. Unattended equipment shall be secured in accordance with the following requirements:

(1) A sufficient number of hand brakes shall be applied to hold the equipment. Railroads shall develop and implement a process or procedure to verify that the applied hand brakes will sufficiently hold the equipment with the air brakes released.

(2) Except for equipment connected to a source of compressed air (e.g., locomotive or ground air source), prior to leaving equipment unattended, the brake pipe shall be reduced to zero at a rate that is no less than a service rate reduction, and the brake pipe vented to atmosphere by leaving the angle cock in the open position on the first unit of the equipment left unattended.

(3) Except for distributed power units, the following requirements apply to unattended locomotives:

(i) All hand brakes shall be fully applied on all locomotives in the lead consist of an unattended train.

(ii) All hand brakes shall be fully applied on all locomotives in an unattended locomotive consist outside of yard limits.

(iii) At a minimum, the hand brake shall be fully applied on the lead locomotive in an unattended locomotive consist within yard limits.

(iv) A railroad shall develop, adopt, and comply with procedures for securing any unattended locomotive required to have a hand brake applied pursuant to paragraph (n)(3)(i) through (n)(3)(iii) when the locomotive is not equipped with an operative hand brake.

(4) A railroad shall adopt and comply with a process or procedures to verify that the applied hand brakes will sufficiently hold an unattended locomotive consist. A railroad shall also adopt and comply with instructions to address throttle position, status of the reverse lever, position of the generator field switch, status of the independent brakes, position of the isolation switch, and position of the automatic brake valve on all unattended locomotives. The procedures and instruction required in this paragraph shall take into account winter weather conditions as they relate to throttle position and reverser handle.

(5) Any hand brakes applied to hold unattended equipment shall not be released until it is known that the air brake system is properly charged.

(o) Air pressure regulating devices shall be adjusted for the following pressures:

Locomotives	PSI
(1) Minimum brake pipe air pressure:	
Road Service	90
Switch Service	60
(2) Minimum differential between brake pipe and main reservoir air pressures, with brake valve in running position	15
(3) Safety valve for straight air brake	30–55

Locomotives	PSI
(4) Safety valve for LT, ET, No. 8–EL, No. 14 EI, No. 6–DS, No. 6–BL and No. 6–SL equipment	30–68
(5) Safety valve for HSC and No. 24–RL equipment	30–75
(6) Reducing valve for independent or straight air brake	30–50
(7) Self-lapping portion for electro-pneumatic brake (minimum full application pressure)	50
(8) Self-lapping portion for independent air brake (full application pressure)	30–50
(9) Reducing valve for high-speed brake (minimum)	50

[66 FR 4193, Jan. 17, 2001, as amended at 67 FR 17581, Apr. 10, 2002]

§ 232.105 General requirements for locomotives.

(a) The air brake equipment on a locomotive shall be in safe and suitable condition for service.

(b) All locomotives ordered on or after August 1, 2002, or placed in service for the first time on or after April 1, 2004, shall be equipped with a hand or parking brake that is:

(1) Capable of application or activation by hand;

(2) Capable of release by hand; and

(3) Capable of holding the unit on a three (3) percent grade.

(c) On locomotives so equipped, the hand or parking brake as well as its parts and connections shall be inspected, and necessary repairs made, as often as service requires but no less frequently than every 368 days. The date of the last inspection shall be either entered on Form FRA F 6180–49A or suitably stenciled or tagged on the locomotive.

(d) The amount of leakage from the equalizing reservoir on locomotives and related piping shall be zero, unless the system is capable of maintaining the set pressure at any service application with the brakes control valve in the freight position. If such leakage is detected en route, the train may be moved only to the nearest forward location where the equalizing-reservoir leakage can be corrected. On locomotives equipped with electronic brakes, if the system logs or displays a fault related to equalizing reservoir leakage, the train may be moved only to the nearest forward location where the necessary repairs can be made.

(e) Use of the feed or regulating valve to control braking is prohibited.

(f) The passenger position on the locomotive brake control stand shall be used only if the trailing equipment is designed for graduated brake release or if equalizing reservoir leakage occurs en route and its use is necessary to safely control the movement of the train until it reaches the next forward location where the reservoir leakage can be corrected.

(g) When taking charge of a locomotive or locomotive consist, an engineer must know that the brakes are in operative condition.

§ 232.107 Air source requirements and cold weather operations.

(a) *Monitoring plans for yard air sources.* (1) A railroad shall adopt and comply with a written plan to monitor all yard air sources, other than locomotives, to determine that they operate as intended and do not introduce contaminants into the brake system of freight equipment.

(2) This plan shall require the railroad to:

(i) Inspect each yard air source at least two times per calendar year, no less than five months apart, to determine it operates as intended and does not introduce contaminants into the brake system of the equipment it services.

(ii) Identify yard air sources found not to be operating as intended or found introducing contaminants into the brake system of the equipment it services.

(iii) Repair or take other remedial action regarding any yard air source identified under paragraph (a)(2)(ii) of this section.

(3) A railroad shall maintain records of the information and actions required by paragraph (a)(2). These records shall be maintained for a period of at least one year from the date of creation and may be maintained either electronically or in writing.

(b) Condensation and other contaminants shall be blown from the pipe or hose from which compressed air is

taken prior to connecting the yard air line or motive power to the train.

(c) No chemicals which are known to degrade or harm brake system components shall be placed in the train air brake system.

(d) Yard air reservoirs shall either be equipped with an operable automatic drain system or be manually drained at least once each day that the devices are used or more often if moisture is detected in the system.

(e) A railroad shall adopt and comply with detailed written operating procedures tailored to the equipment and territory of that railroad to cover safe train operations during cold weather. For purposes of this provision, ''cold weather'' means when the ambient temperature drops below 10 degrees Fahrenheit (F) (minus 12.2 degrees Celsius).

§ 232.109 Dynamic brake requirements.

(a) Except as provided in paragraph (i) of this section, a locomotive engineer shall be informed of the operational status of the dynamic brakes on all locomotive units in the consist at the initial terminal for a train and at other locations where a locomotive engineer first begins operation of a train. The information required by this paragraph may be provided to the locomotive engineer by any means determined to be appropriate by the railroad; however, a written or electronic record of the information shall be maintained in the cab of the controlling locomotive.

(b) Except as provided in paragraph (e) of this section, all inoperative dynamic brakes shall be repaired within 30 calendar days of becoming inoperative or at the locomotive's next periodic inspection pursuant to § 229.23 of this chapter, whichever occurs first.

(c) Except as provided in paragraph (e) of this section, a locomotive discovered with inoperative dynamic brakes shall have a tag bearing the words ''inoperative dynamic brake'' securely attached and displayed in a conspicuous location in the cab of the locomotive. This tag shall contain the following information:

(1) The locomotive number;

(2) The name of the discovering carrier;

(3) The location and date where condition was discovered; and

(4) The signature of the person discovering the condition.

(d) An electronic or written record of repairs made to a locomotive's dynamic brakes shall be retained for 92 days.

(e) A railroad may elect to declare the dynamic brakes on a locomotive deactivated without removing the dynamic brake components from the locomotive, only if all of the following conditions are met:

(1) The locomotive is clearly marked with the words ''dynamic brake deactivated'' in a conspicuous location in the cab of the locomotive; and

(2) The railroad has taken appropriate action to ensure that the deactivated locomotive is incapable of utilizing dynamic brake effort to retard or control train speed.

(f) If a locomotive consist is intended to have its dynamic brakes used while in transit, a locomotive with inoperative or deactivated dynamic brakes or a locomotive not equipped with dynamic brakes shall not be placed in the controlling (lead) position of a consist unless the locomotive has the capability of:

(1) Controlling the dynamic braking effort in trailing locomotives in the consist that are so equipped; and

(2) Displaying to the locomotive engineer the deceleration rate of the train or the total train dynamic brake retarding force.

(g) All locomotives equipped with dynamic brakes and ordered on or after April 1, 2006, or placed in service for the first time on or after October 1, 2007, shall be designed to:

(1) Conduct an electrical integrity test of the dynamic brake to determine if electrical current is being received at the grids on the system; and

(2) Display in real-time in the cab of the controlling (lead) locomotive the total train dynamic brake retarding force available in the train.

(h) All rebuilt locomotives equipped with dynamic brakes and placed in service on or after April 1, 2004, shall be designed to:

(1) Conduct an electrical integrity test of the dynamic brake to determine if electrical current is being received at the grids on the system; and

(2) Display either the train deceleration rate or in real-time in the cab of the controlling (lead) locomotive the total train dynamic brake retarding force available in the train.

(i) The information required by paragraph (a) of this section is not required to be provided to the locomotive engineer if all of the locomotives in the lead consist of a train are equipped in accordance with paragraph (g) of this section.

(j) A railroad operating a train with a brake system that includes dynamic brakes shall adopt and comply with written operating rules governing safe train handling procedures using these dynamic brakes under all operating conditions, which shall be tailored to the specific equipment and territory of the railroad. The railroad's operating rules shall:

(1) Ensure that the friction brakes are sufficient by themselves, without the aid of dynamic brakes, to stop the train safely under all operating conditions.

(2) Include a ''miles-per-hour-overspeed-stop'' rule. At a minimum, this rule shall require that any train when descending a section of track with an average grade of one percent or greater over a distance of three continuous miles shall be immediately brought to a stop, by an emergency brake application if necessary, when the train's speed exceeds the maximum authorized speed for that train by more than 5 miles per hour. A railroad shall reduce the 5-miles-per-hour-overspeed-stop restriction if validated research indicates the need for such a reduction. A railroad may increase the 5-miles-per-hour-overspeed restriction only with approval of FRA and based upon verifiable data and research.

(k) A railroad operating a train with a brake system that includes dynamic brakes shall adopt and comply with specific knowledge, skill, and ability criteria to ensure that its locomotive engineers are fully trained in the operating rules prescribed by paragraph (j) of this section. The railroad shall incorporate such criteria into its locomotive engineer certification program pursuant to Part 240 of this chapter.

[66 FR 4193, Jan. 17, 2001, as amended at 67 FR 17581, Apr. 10, 2002]

§ 232.111 Train handling information.

(a) A railroad shall adopt and comply with written procedures to ensure that a train crew employed by the railroad is given accurate information on the condition of the train brake system and train factors affecting brake system performance and testing when the crew takes over responsibility for the train. The information required by this paragraph may be provided to the locomotive engineer by any means determined appropriate by the railroad; however, a written or electronic record of the information shall be maintained in the cab of the controlling locomotive.

(b) The procedures shall require that each train crew taking charge of a train be informed of:

(1) The total weight and length of the train, based on the best information available to the railroad;

(2) Any special weight distribution that would require special train handling procedures;

(3) The number and location of cars with cut-out or otherwise inoperative brakes and the location where they will be repaired;

(4) If a Class I or Class IA brake test is required prior to the next crew change point, the location at which that test shall be performed; and

(5) Any train brake system problems encountered by the previous crew of the train.

Subpart C—Inspection and Testing Requirements

§ 232.201 Scope.

This subpart contains the inspection and testing requirements for brake systems used in freight and other non-passenger trains. This subpart also contains general training requirements for railroad and contract personnel used to perform the required inspections and tests.

§ 232.203 Training requirements.

(a) Each railroad and each contractor shall adopt and comply with a training, qualification, and designation program for its employees that perform brake system inspections, tests, or maintenance. For purposes of this section, a ''contractor'' is defined as a person under contract with the railroad or car owner. The records required by this section may be maintained either electronically or in writing.

(b) As part of this program, the railroad or contractor shall:

(1) Identify the tasks related to the inspection, testing, and maintenance of the brake system required by this part that must be performed by the railroad or contractor and identify the skills and knowledge necessary to perform each task.

(2) Develop or incorporate a training curriculum that includes both classroom and ''hands-on'' lessons designed to impart the skills and knowledge identified as necessary to perform each task. The developed or incorporated training curriculum shall specifically address the Federal regulatory requirements contained in this part that are related to the performance of the tasks identified.

(3) Require all employees to successfully complete a training curriculum that covers the skills and knowledge the employee will need to possess in order to perform the tasks required by this part that the employee will be responsible for performing, including the specific Federal regulatory requirements contained in this part related to the performance of a task for which the employee will be responsible;

(4) Require all employees to pass a written or oral examination covering the skills and knowledge the employee will need to possess in order to perform the tasks required by this part that the employee will be responsible for performing, including the specific Federal regulatory requirements contained in this part related to the performance of a task for which the employee will be responsible for performing;

(5) Require all employees to individually demonstrate ''hands-on'' capability by successfully applying the skills and knowledge the employee will need to possess in order to perform the tasks required by this part that the employee will be responsible for performing to the satisfaction of the employee's supervisor or designated instructor;

(6) An employee hired or working prior to June 1, 2001, for a railroad or contractor covered by this part will be considered to have met the requirements, or a portion of the requirements, contained in paragraphs (b)(3) through (b)(5) of this section if the employee receives training and testing on the specific Federal regulatory requirements contained in this part related to the performance of the tasks which the employee will be responsible for performing; and if:

(i) The training or testing, including efficiency testing, previously received by the employee is determined by the railroad or contractor to meet the requirements, or a portion of the requirements, contained in paragraphs (b)(3) through (b)(5) of this section and such training or testing can be documented as required in paragraphs (e)(1) through (e)(4) of this section;

(ii) The employee passes an oral, written, or practical, ''hands-on'' test developed or adopted by the railroad or contractor which is determined by the railroad or contractor to ensure that the employee possesses the skills and knowledge, or a portion of the skills or knowledge, required in paragraphs (b)(3) through (b)(5) of this section and the test is documented as required in paragraph (e) of this section; or

(iii) The railroad or contractor certifies that a group or segment of its employees has previously received training or testing determined by the railroad or contractor to meet the requirements, or a portion of the requirements, contained in paragraphs (b)(3) through (b)(5) of this section and complete records of such training are not available, provided the following conditions are satisfied:

(A) The certification is placed in the employee's training records required in paragraph (e) of this section;

(B) The certification contains a brief description of the training provided and the approximate date(s) on which the training was provided; and

(C) Any employee determined to be trained pursuant to this paragraph is

given a diagnostic oral, written, or ''hands-on'' test covering that training for which this paragraph is relied upon at the time the employee receives his or her first periodic refresher training under paragraph (b)(8) of this section.

(iv) Any combination of the training or testing contained in paragraphs (b)(6)(i) through (b)(6)(iii) of this section and paragraphs (b)(3) through (b)(5) of this section.

(7) Require supervisors to exercise oversight to ensure that all the identified tasks are performed in accordance with the railroad's written procedures and the specific Federal regulatory requirements contained in this part;

(8) Require periodic refresher training, at an interval not to exceed three years, that includes classroom and ''hands-on'' training, as well as testing; except that employees that have completed their initial training under paragraphs (b)(3) through (b)(6) of this part prior to April 1, 2004, shall not be required to complete their first periodic refresher training until four years after the completion of their initial training, and every three years thereafter. Observation and evaluation of actual performance of duties may be used to meet the ''hands-on'' portion of this requirement, provided that such testing is documented as required in paragraph (e) of this section; and

(9) Add new brake systems to the training, qualification and designation program prior to its introduction to revenue service.

(c) A railroad that operates trains required to be equipped with a two-way end-of-train telemetry device pursuant to Subpart E of this part, and each contractor that maintains such devices shall adopt and comply with a training program which specifically addresses the testing, operation, and maintenance of two-way end-of-train devices for employees who are responsible for the testing, operation, and maintenance of the devices.

(d) A railroad that operates trains under conditions that require the setting of air brake pressure retaining valves shall adopt and comply with a training program which specifically addresses the proper use of retainers for employees who are responsible for using or setting retainers.

(e) A railroad or contractor shall maintain adequate records to demonstrate the current qualification status of all of its personnel assigned to inspect, test, or maintain a train brake system. The records required by this paragraph may be maintained either electronically or in writing and shall be provided to FRA upon request. These records shall include the following information concerning each such employee:

(1) The name of the employee;

(2) The dates that each training course was completed;

(3) The content of each training course successfully completed;

(4) The employee's scores on each test taken to demonstrate proficiency;

(5) A description of the employee's ''hands-on'' performance applying the skills and knowledge the employee needs to possess in order to perform the tasks required by this part that the employee will be responsible for performing and the basis for finding that the skills and knowledge were successfully demonstrated;

(6) The tasks required to be performed under this part which the employee is deemed qualified to perform; and

(7) Identification of the person(s) determining that the employee has successfully completed the training necessary to be considered qualified to perform the tasks identified in paragraph (e)(7) of this section.

(8) The date that the employee's status as qualified to perform the tasks identified in paragraph (e)(7) of this section expires due to the need for refresher training.

(f) A railroad or contractor shall adopt and comply with a plan to periodically assess the effectiveness of its training program. One method of validation and assessment could be through the use of efficiency tests or periodic review of employee performance.

[66 FR 4193, Jan. 17, 2001, as amended at 67 FR 17581, Apr. 10, 2002]

§ 232.205 Class I brake test-initial terminal inspection.

(a) Each train and each car in the train shall receive a Class I brake test as described in paragraph (c) of this

section by a qualified person, as defined in § 232.5, at the following points:

(1) The location where the train is originally assembled (''initial terminal'');

(2) A location where the train consist is changed other than by:

(i) Adding a single car or a solid block of cars, except as provided in paragraph (b)(2) of this section;

(ii) Removing a single car or a solid block of cars;

(iii) Removing cars determined to be defective under this chapter; or

(iv) A combination of the changes listed in paragraphs (a)(2)(i) through (a)(2)(iii) of this section (See §§ 232.209 and 232.211 for requirements related to the pick-up of cars and solid blocks of cars en route.);

(3) A location where the train is off air for a period of more than four hours;

(4) A location where a unit or cycle train has traveled 3,000 miles since its last Class I brake test; and

(5) A location where the train is received in interchange if the train consist is changed other than by:

(i) Removing a car or a solid block of cars from the train;

(ii) Adding a previously tested car or a previously tested solid block of cars to the train;

(iii) Changing motive power;

(iv) Removing or changing the caboose; or

(v) Any combination of the changes listed in paragraphs (a)(5) of this section.

(A) If changes other than those contained in paragraph (a)(5)(i)–(a)(5)(v) of this section are made to the train consist when it is received in interchange and the train will move 20 miles or less, then the railroad may conduct a brake test pursuant to § 232.209 on those cars added to the train.

(B) [Reserved]

(b) Except as provided in § 232.209, each car and each solid block of cars added to a train shall receive a Class I brake test as described in paragraph (c) of this section at the location where it is added to a train unless:

(1) The solid block of cars is comprised of cars from a single previous train, the cars of which have previously received a Class I brake test and have remained continuously and consecutively coupled together with the train line remaining connected, other than for removing defective equipment, since being removed from its previous train and have not been off air for more than four hours; or

(2) The solid block of cars is comprised of cars from a single previous train, the cars of which were required to be separated into multiple solid blocks of cars due to space or trackage constraints at a particular location when removed from the previous train, provided the cars have previously received a Class I brake test, have not been off air more than four hours, and the cars in each of the multiple blocks of cars have remained continuously and consecutively coupled together with the train line remaining connected, except for the removal of defective equipment. Furthermore, these multiple solid blocks of cars shall be added to a train in the same relative order (no reclassification) as when removed from the previous train, except for the removal of defective equipment.

(c) A Class I brake test of a train shall consist of the following tasks and requirements:

(1) Brake pipe leakage shall not exceed 5 psi per minute or air flow shall not exceed 60 cubic feet per minute (CFM).

(i) *Leakage Test.* The brake pipe leakage test shall be conducted as follows:

(A) Charge the air brake system to the pressure at which the train will be operated, and the pressure at the rear of the train shall be within 15 psi of the pressure at which the train will be operated, but not less than 75 psi, as indicated by an accurate gauge or end-of-train device at the rear end of train;

(B) Upon receiving the signal to apply brakes for test, make a 20-psi brake pipe service reduction;

(C) If the locomotive used to perform the leakage test is equipped with a means for maintaining brake pipe pressure at a constant level during a 20-psi brake pipe service reduction, this feature shall be cut out during the leakage test; and

(D) With the brake valve lapped and the pressure maintaining feature cut out (if so equipped) and after waiting

45–60 seconds, note the brake pipe leakage as indicated by the brake-pipe gauge in the locomotive, which shall not exceed 5 psi per minute.

(ii) *Air Flow Method Test.* When a locomotive is equipped with a 26-L brake valve or equivalent pressure maintaining locomotive brake valve, a railroad may use the Air Flow Method Test as an alternate to the brake pipe leakage test. The Air Flow Method (AFM) Test shall be performed as follows:

(A) Charge the air brake system to the pressure at which the train will be operated, and the pressure at the rear of the train shall be within 15 psi of the pressure at which the train will be operated, but not less than 75 psi, as indicated by an accurate gauge or end-of-train device at the rear end of train; and

(B) Measure air flow as indicated by a calibrated AFM indicator, which shall not exceed 60 cubic feet per minute (CFM).

(iii) The AFM indicator shall be calibrated for accuracy at periodic intervals not to exceed 92 days. The AFM indicator calibration test orifices shall be calibrated at temperatures of not less than 20 degrees Fahrenheit. AFM indicators shall be accurate to within ±3 standard cubic feet per minute (CFM).

(2) The inspector(s) shall take a position on each side of each car sometime during the inspection process so as to be able to examine and observe the functioning of all moving parts of the brake system on each car in order to make the determinations and inspections required by this section. A ''roll-by'' inspection of the brake release as provided for in paragraph (b)(8) of this section shall not constitute an inspection of that side of the train for purposes of this requirement;

(3) The train brake system shall be charged to the pressure at which the train will be operated, and the pressure at the rear of the train shall be within 15 psi of the pressure at which the train will be operated, but not less than 75 psi, angle cocks and cutout cocks shall be properly positioned, air hoses shall be properly coupled and shall not kink, bind, or foul or be in any other condition that restricts air flow. An examination must be made for leaks and necessary repairs made to reduce leakage to the required minimum. Retaining valves and retaining valve pipes shall be inspected and known to be in proper condition for service;

(4) The brakes on each car shall apply in response to a 20-psi brake pipe service reduction and shall remain applied until a release of the air brakes has been initiated by the controlling locomotive or yard test device. The brakes shall not be applied or released until the proper signal is given. A car found with brakes that fail to apply or remain applied may be retested and remain in the train if the retest is conducted at an air pressure that is within 15 psi of the air pressure at which the train will be operated. The retest may be conducted from either the controlling locomotive, the head-end of the consist, or with a suitable test device, as described in § 232.217(a), positioned at one end of the car(s) being retested, and the brakes shall remain applied until a release is initiated after a period which is no less than three minutes. If the retest is performed at the car(s) being retested with a suitable device, the compressed air in the car(s) shall be depleted prior to disconnecting the hoses between the car(s) to perform the retest;

(5) For cars equipped with 8½-inch or 10-inch diameter brake cylinders, piston travel shall be within 7 to 9 inches. If piston travel is found to be less than 7 inches or more than 9 inches, it must be adjusted to nominally 7½ inches. For cars not equipped with 8½-inch or 10-inch diameter brake cylinders, piston travel shall be within the piston travel stenciled or marked on the car or badge plate. Minimum brake cylinder piston travel of truck-mounted brake cylinders must be sufficient to provide proper brake shoe clearance when the brakes are released. Piston travel must be inspected on each freight car while the brakes are applied;

(6) Brake rigging shall be properly secured and shall not bind or foul or otherwise adversely affect the operation of the brake system;

(7) All parts of the brake equipment shall be properly secured. On cars where the bottom rod passes through the truck bolster or is secured with

cotter keys equipped with a locking device to prevent their accidental removal, bottom rod safety supports are not required; and

(8) When the release is initiated by the controlling locomotive or yard test device, the brakes on each freight car shall be inspected to verify that it did release; this may be performed by a ''roll-by'' inspection. If a ''roll-by'' inspection of the brake release is performed, train speed shall not exceed 10 MPH and the qualified person performing the ''roll-by'' inspection shall communicate the results of the inspection to the operator of the train. The operator of the train shall note successful completion of the release portion of the inspection on the record required in paragraph (d) of this section.

(d) Where a railroad's collective bargaining agreement provides that a carman is to perform the inspections and tests required by this section, a carman alone will be considered a qualified person. In these circumstances, the railroad shall ensure that the carman is properly trained and designated as a qualified person or qualified mechanical inspector pursuant to the requirements of this part.

(e) A railroad shall notify the locomotive engineer that the Class I brake test was satisfactorily performed and provide the information required in this paragraph to the locomotive engineer or place the information in the cab of the controlling locomotive following the test. The information required by this paragraph may be provided to the locomotive engineer by any means determined appropriate by the railroad; however, a written or electronic record of the information shall be retained in the cab of the controlling locomotive until the train reaches its destination. The written or electronic record shall contain the date, time, number of freight cars inspected, and identify the qualified person(s) performing the test and the location where the Class I brake test was performed.

(f) Before adjusting piston travel or working on brake rigging, cutout cock in brake pipe branch must be closed and air reservoirs must be voided of all compressed air. When cutout cocks are provided in brake cylinder pipes, these cutout cocks only may be closed and air reservoirs need not be voided of all compressed air.

[66 FR 4193, Jan. 17, 2001, as amended at 67 FR 17582, Apr. 10, 2002]

§ 232.207 Class IA brake tests—1,000-mile inspection.

(a) Except as provided in § 232.213, each train shall receive a Class IA brake test performed by a qualified person, as defined in § 232.5, at a location that is not more than 1,000 miles from the point where any car in the train last received a Class I or Class IA brake test. The most restrictive car or block of cars in the train shall determine the location of this test.

(b) A Class IA brake test of a train shall consist of the following tasks and requirements:

(1) Brake pipe leakage shall not exceed 5 psi per minute, or air flow shall not exceed 60 cubic feet per minute (CFM). The brake pipe leakage test or air flow method test shall be conducted pursuant to the requirements contained in § 232.205(c)(1);

(2) The inspector shall position himself/herself, taking positions on each side of each car sometime during the inspection process, so as to be able to examine and observe the functioning of all moving parts of the brake system on each car in order to make the determinations and inspections required by this section;

(3) The air brake system shall be charged to the pressure at which the train will be operated, and the pressure at the rear of the train shall be within 15 psi of the pressure at which the train will be operated, but not less than 75 psi, as indicated by an accurate gauge or end-of-train device at rear end of train;

(4) The brakes on each car shall apply in response to a 20-psi brake pipe service reduction and shall remain applied until the release is initiated by the controlling locomotive. A car found with brakes that fail to apply or remain applied may be retested and remain in the train if the retest is conducted as prescribed in § 232.205(c)(4); otherwise, the defective equipment may only be moved pursuant to the provisions contained in § 232.15, if applicable;

(5) Brake rigging shall be properly secured and shall not bind or foul or otherwise adversely affect the operation of the brake system; and

(6) All parts of the brake equipment shall be properly secured.

(c) A railroad shall designate the locations where Class IA brake tests will be performed, and the railroad shall furnish to the Federal Railroad Administration upon request a description of each location designated. A railroad shall notify FRA's Associate Administrator for Safety in writing 30 days prior to any change in the locations designated for such tests and inspections.

(1) Failure to perform a Class IA brake test on a train at a location designated pursuant to this paragraph constitutes a failure to perform a proper Class IA brake test if the train is due for such a test at that location.

(2) In the event of an emergency that alters normal train operations, such as a derailment or other unusual circumstance that adversely affects the safe operation of the train, the railroad is not required to provide prior written notification of a change in the location where a Class IA brake test is performed to a location not on the railroad's list of designated locations for performing Class IA brake tests, provided that the railroad notifies FRA's Associate Administrator for Safety and the pertinent FRA Regional Administrator within 24 hours after the designation has been changed and the reason for that change.

[66 FR 4193, Jan. 17, 2001, as amended at 67 FR 17582, Apr. 10, 2002]

§ 232.209 Class II brake tests—intermediate inspection.

(a) At a location other than the initial terminal of a train, a Class II brake test shall be performed by a qualified person, as defined in § 232.5, on the following equipment when added to a train:

(1) Each car or solid block of cars, as defined in § 232.5, that has not previously received a Class I brake test or that has been off air for more than four hours;

(2) Each solid block of cars, as defined in § 232.5, that is comprised of cars from more than one previous train; and

(3) Except as provided in paragraph (a)(4) of this section, each solid block of cars that is comprised of cars from only one previous train, the cars of which have not remained continuously and consecutively coupled together with the train line remaining connected since being removed from the previous train. A solid block of cars is considered to have remained continuously and consecutively coupled together with the train line remaining connected since being removed from the previous train if it has been changed only by removing defective equipment.

(4) Each solid block of cars that is comprised of cars from a single previous train, the cars of which were required to be separated into multiple solid blocks of cars due to space or trackage constraints at a particular location when removed from the previous train, if they are not added in the same relative order as when removed from the previous train or if the cars in each of the multiple blocks of cars have not remained continuously and consecutively coupled together with the train line remaining connected, except for the removal of defective equipment.

(b) A Class II brake test shall consist of the following tasks and requirements:

(1) Brake pipe leakage shall not exceed 5 psi per minute, or air flow shall not exceed 60 cubic feet per minute (CFM). The brake pipe leakage test or air flow method test shall be conducted on the entire train pursuant to the requirements contained in § 232.205(c)(1);

(2) The air brake system shall be charged to the pressure at which the train will be operated, and the pressure at the rear of the train shall be within 15 psi of the pressure at which the train will be operated, but not less than 75 psi, as indicated by an accurate gauge or end-of-train device at the rear end of train;

(3) The brakes on each car added to the train and on the rear car of the train shall be inspected to ensure that they apply in response to a 20-psi brake pipe service reduction and remain applied until the release is initiated from the controlling locomotive. A car found

with brakes that fail to apply or remain applied may be retested and remain in the train if the retest is conducted as prescribed in § 232.205(c)(4); otherwise, the defective equipment may only be moved pursuant to the provisions of § 232.15, if applicable;

(4) When the release is initiated, the brakes on each car added to the train and on the rear car of the train shall be inspected to verify that they did release; this may be performed by a ''roll-by'' inspection. If a ''roll-by'' inspection of the brake release is performed, train speed shall not exceed 10 MPH, and the qualified person performing the ''roll-by'' inspection shall communicate the results of the inspection to the operator of the train; and

(5) Before the train proceeds the operator of the train shall know that the brake pipe pressure at the rear of the train is being restored.

(c) As an alternative to the rear car brake application and release portion of the test, the operator of the train shall determine that brake pipe pressure of the train is being reduced, as indicated by a rear car gauge or end-of-train telemetry device, and then that the brake pipe pressure of the train is being restored, as indicated by a rear car gauge or end-of-train telemetry device. (When an end-of-train telemetry device is used to comply with any test requirement in this part, the phrase ''brake pipe pressure of the train is being reduced'' means a pressure reduction of at least 5 psi, and the phrase ''brake pipe pressure of the train is being restored'' means a pressure increase of at least 5 psi). If an electronic communication link between a controlling locomotive and a remotely controlled locomotive attached to the rear end of a train is utilized to determine that brake pipe pressure is being restored, the operator of the train shall know that the air brakes function as intended on the remotely controlled locomotive.

(d) Each car or solid block of cars that receives a Class II brake test pursuant to this section when added to the train shall receive a Class I brake test at the next forward location where facilities are available for performing such a test.

[66 FR 4193, Jan. 17, 2001, as amended at 67 FR 17583, Apr. 10, 2002]

§ 232.211 Class III brake tests-trainline continuity inspection.

(a) A Class III brake test shall be performed on a train by a qualified person, as defined in § 232.5, to test the train brake system when the configuration of the train has changed in certain ways. In particular, a Class III brake test shall be performed at the location where any of the following changes in the configuration of the train occur:

(1) Where a locomotive or a caboose is changed;

(2) Where a car or a block of cars is removed from the train with the consist otherwise remaining intact;

(3) At a point other than the initial terminal for the train, where a car or a solid block of cars that is comprised of cars from only one previous train the cars of which have remained continuously and consecutively coupled together with the trainline remaining connected, other than for removing defective equipment, since being removed from its previous train that has previously received a Class I brake test and that has not been off air for more than four hours is added to a train;

(4) At a point other than the initial terminal for the train, where a solid block of cars that is comprised of cars from a single previous train is added to a train, provided that the solid block of cars was required to be separated into multiple solid blocks of cars due to space or trackage constraints at a particular location when removed from the previous train, and the cars have previously received a Class I brake test, have not been off air more than four hours, and the cars in each of the multiple blocks of cars have remained continuously and consecutively coupled together with the train line remaining connected, except for the removal of defective equipment. Furthermore, these multiple solid blocks of cars must be added to the train in the same relative order (no reclassification) as when removed from the previous train, except for the removal of defective equipment; or

(5) At a point other than the initial terminal for the train, where a car or a solid block of cars that has received a Class I or Class II brake test at that location, prior to being added to the train, and that has not been off air for more than four hours is added to a train.

(b) A Class III brake test shall consist of the following tasks and requirements:

(1) The train brake system shall be charged to the pressure at which the train will be operated, and the pressure at the rear of the train shall not be less than 60 psi, as indicated at the rear of the train by an accurate gauge or end-of-train device;

(2) The brakes on the rear car of the train shall apply in response to a 20-psi brake pipe service reduction and shall remain applied until the release is initiated by the controlling locomotive;

(3) When the release is initiated, the brakes on the rear car of the train shall be inspected to verify that it did release; and

(4) Before proceeding the operator of the train shall know that the brake pipe pressure at the rear of freight train is being restored.

(c) As an alternative to the rear car brake application and release portion of the test, it shall be determined that the brake pipe pressure of the train is being reduced, as indicated by a rear car gauge or end-of-train telemetry device, and then that the brake pipe pressure of the train is being restored, as indicated by a rear car gauge or end-of-train telemetry device. If an electronic or radio communication link between a controlling locomotive and a remotely controlled locomotive attached to the rear end of a train is utilized to determine that brake pipe pressure is being restored, the operator of the train shall know that the air brakes function as intended on the remotely controlled locomotive.

(d) Whenever the continuity of the brake pipe is broken or interrupted with the train consist otherwise remaining unchanged, it must be determined that the brake pipe pressure of the train is being restored as indicated by a rear car gauge or end-of-train device prior to proceeding. In the absence of an accurate rear car gauge or end-of-train telemetry device, it must be determined that the brakes on the rear car of the train apply and release in response to air pressure changes made in the controlling locomotive.

[66 FR 4193, Jan. 17, 2001, as amended at 67 FR 17583, Apr. 10, 2002]

§ 232.213 Extended haul trains.

(a) A railroad may be permitted to move a train up to, but not exceeding, 1,500 miles between brake tests and inspections if the railroad designates a train as an extended haul train. In order for a railroad to designate a train as an extended haul train, all of the following requirements must be met:

(1) The railroad must designate the train in writing to FRA's Associate Administrator for Safety. This designation must include the following:

(i) The train identification symbol or identification of the location where extended haul trains will originate and a description of the trains that will be operated as extended haul trains from those locations;

(ii) The origination and destination points for the train;

(iii) The type or types of equipment the train will haul; and

(iv) The locations where all train brake and mechanical inspections and tests will be performed.

(2) A Class I brake test pursuant to § 232.205 shall be performed at the initial terminal for the train by a qualified mechanical inspector as defined in § 232.5.

(3) A freight car inspection pursuant to part 215 of this chapter shall be performed at the initial terminal for the train and shall be performed by an inspector designated under § 215.11 of this chapter.

(4) All cars having conditions not in compliance with part 215 of this chapter at the initial terminal for the train shall be either repaired or removed from the train. Except for a car developing such a condition en route, no car shall be moved pursuant to the provisions of § 215.9 of this chapter in the train.

(5) The train shall have no more than one pick-up and one set-out en route, except for the set-out of defective equipment pursuant to the requirements of this chapter.

(i) Cars added to the train en route shall be inspected pursuant to the requirements contained in paragraphs (a)(2) through (a)(5) of this section at the location where they are added to the train.

(ii) Cars set out of the train en route shall be inspected pursuant to the requirements contained in paragraph (a)(6) of this section at the location where they are set out of the train.

(6) At the point of destination, if less than 1,500 miles from the train's initial terminal, or at the point designated by the railroad pursuant to paragraph (a)(1)(iv) of this section, not to exceed 1,500 miles, an inbound inspection of the train shall be conducted by a qualified mechanical inspector to identify any defective, inoperative, or ineffective brakes or any other condition not in compliance with this part as well as any conditions not in compliance with part 215 and part 231 of this chapter. After April 1, 2007, the inbound inspection described in this paragraph shall not be required unless FRA provides notification to the industry extending the requirement to perform inbound inspections on extended haul trains. FRA's determination to extend the inbound inspection requirement will be based on the records required to be maintained pursuant to paragraph (a)(7) of this section and any other relevant safety data. FRA's notification will be published in the FEDERAL REGISTER and will contain the basis of any determination.

(7) The railroad shall maintain a record of all defective, inoperative, or ineffective brakes as well as any conditions not in compliance with part 215 and part 231 of this chapter discovered at anytime during the movement of the train. These records shall be retained for a period of one year and made available to FRA upon request. The records required by this section may be maintained either electronically or in writing. After April 1, 2007, the records described in this paragraph need not be maintained unless FRA provides the notification required in paragraph (a)(6) of this section extending the requirement to conduct inbound inspections on extended haul trains.

(8) In order for an extended haul train to proceed beyond 1,500 miles, the following requirements shall be met:

(i) If the train will move 1,000 miles or less from that location before receiving a Class IA brake test or reaching destination, a Class I brake test shall be conducted pursuant to § 232.205 to ensure 100 percent effective and operative brakes. The inbound inspection required by paragraph (a)(6) of this section may be used to meet this requirement provided it encompasses all the inspection elements contained in § 232.205.

(ii) If the train will move greater than 1,000 miles from that location without another brake inspection, the train must be identified as an extended haul train for that movement and shall meet all the requirements contained in paragraphs (a)(1) through (a)(7) of this section. Such trains shall receive a Class I brake test pursuant to § 232.205 by a qualified mechanical inspector to ensure 100 percent effective and operative brakes, a freight car inspection pursuant to part 215 of this chapter by an inspector designated under § 215.11 of this chapter, and all cars containing non-complying conditions under part 215 of this chapter shall either be repaired or removed from the train. The inbound inspection required by paragraph (a)(6) of this section may be used to meet these inspection requirements provided it encompasses all the inspection elements contained paragraphs (a)(2) through (a)(4) of this section.

(9) FRA inspectors shall have physical access to visually observe all brake and freight car inspections and tests required by this section.

(b) Failure to comply with any of the requirements contained in paragraph (a) of this section will be considered an improper movement of a designated priority train for which appropriate civil penalties may be assessed as outlined in Appendix A to this part. Furthermore, FRA's Associate Administrator for Safety may revoke a railroad's ability to designate any or all trains as extended haul trains for repeated or willful noncompliance with any of the requirements contained in this section. Such a determination will

be made in writing and will state the basis for such action.

[66 FR 4193, Jan. 17, 2001, as amended at 67 FR 17583, Apr. 10, 2002]

§ 232.215 Transfer train brake tests.

(a) A transfer train, as defined in § 232.5, shall receive a brake test performed by a qualified person, as defined in § 232.5, that includes the following:

(1) The air brake hoses shall be coupled between all freight cars;

(2) After the brake system is charged to not less than 60 psi as indicated by an accurate gauge or end-of-train device at the rear of the train, a 15-psi service brake pipe reduction shall be made; and

(3) An inspection shall be made to determine that the brakes on each car apply and remain applied until the release is initiated by the controlling locomotive. A car found with brakes that fail to apply or remain applied may be retested and remain in the train if the retest is conducted as prescribed in § 232.205(c)(4); otherwise, the defective equipment may be moved only pursuant to the provisions contained in § 232.15, if applicable;

(b) Cars added to transfer trains en route shall be inspected pursuant to the requirements contained in paragraph (a) of this section at the location where the cars are added to the train.

(c) If a train's movement will exceed 20 miles or is not a transfer train as defined in § 232.5, the train shall receive a Class I brake test in accordance with § 232.205 prior to departure.

[66 FR 4193, Jan. 17, 2001, as amended at 67 FR 17583, Apr. 10, 2002]

§ 232.217 Train brake tests conducted using yard air.

(a) When a train air brake system is tested from a yard air source, an engineer's brake valve or a suitable test device shall be used to provide any increase or reduction of brake pipe air pressure at the same, or slower, rate as an engineer's brake valve.

(b) The yard air test device must be connected to the end of the train or block of cars that will be nearest to the controlling locomotive. However, if the railroad adopts and complies with written procedures to ensure that potential overcharge conditions to the train brake system are avoided, the yard air test device may be connected to other than the end nearest to the controlling locomotive.

(c) Except as provided in this section, when yard air is used the train air brake system must be charged and tested as prescribed by § 232.205(c) and when practicable should be kept charged until road motive power is coupled to train, after which, a Class III brake test shall be performed as prescribed by § 232.211.

(1) If the cars are off air for more than four hours, the cars shall be retested in accordance with § 232.205(c) through (f).

(2) At a minimum, yard air pressure shall be 60 psi at the end of the consist or block of cars opposite from the yard test device and shall be within 15 psi of the regulator valve setting on yard test device.

(3) If the air pressure of the yard test device is less than 80 psi, then a brake pipe leakage or air flow test shall be conducted at the operating pressure of the train when the locomotives are attached in accordance with § 232.205(c)(1).

(d) Mechanical yard air test devices and gauges shall be calibrated every 92 days. Electronic yard test devices and gauges shall be calibrated annually. Mechanical and electronic yard air test devices and gauges shall be calibrated so that they are accurate to within ±3 psi.

(e) If used to test a train, a yard air test device and any yard air test equipment shall be accurate and function as intended.

[66 FR 4193, Jan. 17, 2001, as amended at 67 FR 17583, Apr. 10, 2002]

§ 232.219 Double heading and helper service.

(a) When more than one locomotive is attached to a train, the engineer of the controlling locomotive shall operate the brakes. In case it becomes necessary for the controlling locomotive to give up control of the train short of the destination of the train, a Class III brake test pursuant to § 232.211 shall be made to ensure that the brakes are operative from the automatic brake valve

of the locomotive taking control of the train.

(b) When one or more helper locomotives are placed in a train, a visual inspection shall be made of each helper locomotive brake system to determine that the brake system operates as intended in response to a 20-psi reduction initiated from the controlling locomotive of the train. A helper locomotive with inoperative or ineffective brakes shall be repaired prior to use or removed from the train.

(c) If a helper locomotive utilizes a Helper Link device or a similar technology, the locomotive and device shall be equipped, designed, and maintained as follows:

(1) The locomotive engineer shall be notified by a distinctive alarm of any loss of communication between the device and the two-way end-of-train device of more than 25 seconds;

(2) A method to reset the device shall be provided in the cab of the helper locomotive that can be operated from the engineer's usual position during operation of the locomotive. Alternatively, the helper locomotive or the device shall be equipped with a means to automatically reset the device, provided that the automatic reset occurs within the period time permitted for manual reset of the device; and

(3) The device shall be tested for accuracy and calibrated if necessary according to the manufacturer's specifications and procedures every 365 days. This shall include testing radio frequencies and modulation of the device. A legible record of the date and location of the last test or calibration shall be maintained with the device.

[66 FR 4193, Jan. 17, 2001, as amended at 67 FR 17584, Apr. 10, 2002]

Subpart D—Periodic Maintenance and Testing Requirements

§ 232.301 Scope.

This subpart contains the periodic brake system maintenance and testing requirements for equipment used in freight and other non-passenger trains.

§ 232.303 General requirements.

(a) *Definitions.* The following definitions are intended solely for the purpose of identifying what constitutes a shop or repair track under this subpart.

(1) *Shop or repair track* means:

(i) A fixed repair facility or track designated by the railroad as a shop or repair track;

(ii) A fixed repair facility or track which is regularly and consistently used to perform major repairs;

(iii) track which is used at a location to regularly and consistently perform both minor and major repairs where the railroad has not designated a certain portion of that trackage as a repair track;

(iv) A track designated by a railroad as a track where minor repairs will be conducted or used by a railroad to regularly and consistently perform minor repairs during the period when the track is used to conduct major repairs; however, such trackage is considered a shop or repair track only for each car receiving major repairs on such trackage and not for a car receiving only minor repairs; and

(v) The facilities and tracks identified in paragraphs (a)(1)(i) through (a)(1)(iv) shall be considered shop or repair tracks regardless of whether a mobile repair vehicle is used to conduct the repairs.

(2) *Major repair* means a repair that normally would require greater than four person-hours to accomplish or would involve the use of specialized tools and equipment. Major repairs include such activities as coupler replacement, draft gear repair, and repairs requiring the use of an air jack but exclude changing wheels on intermodal loading ramps either with or without an air jack.

(3) *Minor repair* means repairs, other than major repairs, that can be accomplished in a short period of time with limited tools and equipment. Minor repairs would include such things as safety appliance straightening, handhold replacement, air hose replacement, lading adjustment, and coupler knuckle or knuckle pin replacement.

(b) A car on a shop or repair track shall be tested to determine that the air brakes apply and remain applied until a release is initiated.

(c) A car on a shop or repair track shall have its piston travel inspected. For cars equipped with 8½-inch or 10-

inch diameter brake cylinders, piston travel shall be within 7 to 9 inches. If piston travel is found to be less than 7 inches or more than 9 inches, it must be adjusted to nominally 7½ inches. For cars not equipped with 8½-inch or 10-inch diameter brake cylinders, piston travel shall be within the piston travel stenciled or marked on the car or badge plate.

(d) Before a car is released from a shop or repair track, a qualified person shall ensure:

(1) The brake pipe is securely clamped;

(2) Angle cocks are properly located with suitable clearance and properly positioned to allow maximum air flow;

(3) Valves, reservoirs, and cylinders are tight on supports and the supports are securely attached to the car;

(4) Hand brakes are tested, inspected, and operate as intended; and

(5) Brake indicators, on cars so equipped, are accurate and operate as intended.

(e) If the single car air brake test required by § 232.305 cannot be conducted at the point where repairs can be made to the car, the car may be moved after the repairs are made to the next forward location where the test can be performed. Inability to perform a single car air brake test does not constitute an inability to make the necessary repairs.

(1) If it is necessary to move a car from the location where the repairs are performed in order to perform a single car air brake test required by this part, a tag or card shall be placed on both sides of the equipment, or an automated tracking system approved for use by FRA, shall contain the following information about the equipment:

(i) The reporting mark and car number;

(ii) The name of the inspecting railroad;

(iii) The location where repairs were performed and date;

(iv) Indication whether the car requires a single car air brake test;

(v) The location where the appropriate test is to be performed; and

(vi) The name, signature, if possible, and job title of the qualified person approving the move.

(2) The tag or card required by paragraph (e)(1) of this section shall remain affixed to the equipment until the necessary test has been performed.

(3) An electronic or written record or copy of each tag or card attached to or removed from a car or locomotive shall be retained for 90 days and, upon request, shall be made available within 15 calendar days for inspection by FRA or State inspectors.

(4) The record or copy of each tag or card removed from a car or locomotive shall contain the date, location, and the signature or identification of the qualified person removing it from the piece of equipment.

(f) The location and date of the last single car air brake test required by § 232.305 shall be clearly stenciled, marked, or labeled in two-inch high letters or numerals on the side of the equipment. Alternatively, the railroad industry may use an electronic or automated tracking system to track the required information and the performance of the test required by § 232.305.

(1) Electronic or automated tracking systems used to meet the requirement contained in this paragraph shall be capable of being reviewed and monitored by FRA at any time to ensure the integrity of the system. FRA's Associate Administrator for Safety may prohibit or revoke the railroad industry's authority to utilize an electronic or automated tracking system in lieu of stenciling or marking if FRA finds that the electronic or automated tracking system is not properly secure, is inaccessible to FRA or railroad employees, or fails to adequately track and monitor the equipment. FRA will record such a determination in writing, include a statement of the basis for such action, and will provide a copy of the document to the affected railroads.

(2) [Reserved]

[66 FR 4193, Jan. 17, 2001, as amended at 66 FR 39687, Aug. 1, 2001; 67 FR 17584, Apr. 10, 2002]

§ 232.305 Single car air brake tests.

(a) Single car air brake tests shall be performed by a qualified person in accordance with either Section 3.0, ''Tests-Standard Freight Brake Equipment,'' and Section 4.0, ''Special

Tests,'' of the Association of American Railroads Standard S–486–01, ''Code of Air Brake System Tests for Freight Equipment,'' contained in the AAR *Manual of Standards and Recommended Practices, Section E* (January 1, 2001); an alternative procedure approved by FRA pursuant to § 232.17; or a modified procedure approved in accordance with the provisions contained in § 232.307. The incorporation by reference of these two sections of this AAR standard was approved by the Director of the Federal Register in accordance with 5 U.S.C. 552(a) and 1 CFR part 51. You may obtain a copy of the incorporated document from the Association of American Railroads, 50 F Street, NW., Washington, DC 20001. You may inspect a copy of the document at the Federal Railroad Administration, Docket Clerk, 1120 Vermont Avenue, NW., Suite 7000, Washington, DC or at the National Archives and Records Administration (NARA). For information on the availability of this material at NARA, call 202–741–6030, or go to: *http://www.archives.gov/federal_register/code_of_federal_regulations/ibr_locations.html.*

(b) Except as provided in § 232.303(e), a railroad shall perform a single car air brake test on a car when:

(1) A car has its brakes cut-out or inoperative when removed from a train or when placed on a shop or repair track, as defined in § 232.303(a);

(2) A car is on a shop or repair track, as defined in § 232.303(a), for any reason and has not received a single car air brake test within the previous 12-month period;

(3) A car is found with missing or incomplete single car air brake test information;

(4) One or more of the following conventional air brake equipment items is removed, repaired, or replaced:

(i) Brake reservoir;

(ii) Control valve mounting gasket;

(iii) Pipe bracket stud;

(iv) Service portion;

(v) Emergency portion; or

(vi) Pipe bracket.

(5) A car is found with one or more of the following wheel defects:

(i) Built-up tread, unless known to be caused by hand brake left applied;

(ii) Slid flat wheel, unless known to be caused by hand brake left applied; or

(iii) Thermal cracks.

(c) Except as provided in paragraph (d) of this section, each car shall receive a single car air brake test no less than every 5 years.

(d) Each car shall receive a single car air brake test no less than 8 years from the date the car was built or rebuilt.

(e) A single car air brake test shall be performed on each new or rebuilt car prior to placing or using the car in revenue service.

(f) For purposes of paragraphs (b)(2), (b)(3), and (c) of this section, if a single car test or repair track air brake test is conducted on a car prior to January 1, 2001, pursuant to the then existing AAR standards, it shall be considered the last single car air brake test for that car, if necessary.

[66 FR 39688, Aug. 1, 2001]

§ 232.307 Modification of the single car air brake test procedures.

(a) *Request.* The AAR or other authorized representative of the railroad industry may seek modification of the single car air brake test procedures prescribed in § 232.305(a). The request for modification shall be submitted in triplicate to the Associate Administrator for Safety, Federal Railroad Administration, 400 7th Street, S.W., Washington, D.C. 20590 and shall contain:

(1) The name, title, address, and telephone number of the primary person to be contacted with regard to review of the modification;

(2) The modification, in detail, to be substituted for a particular procedure prescribed in § 232.305(a);

(3) Appropriate data or analysis, or both, for FRA to consider in determining whether the modification will provide at least an equivalent level of safety; and

(4) A statement affirming that the railroad industry has served a copy of the request on the designated representatives of the employees responsible for the equipment's operation, inspection, testing, and maintenance under this part, together with a list of the names and addresses of the persons served.

(b) *Federal Register document.* Upon receipt of a request for modification, FRA will publish a document in the FEDERAL REGISTER containing the requested modification. The document will permit interested parties 60 days to comment on any requested modification.

(c) *FRA review.* During the 60 days provided for public comment, FRA will review the petition. If FRA objects to the requested modification, written notification will be provided, within this 60-day period, to the party requesting the modification detailing FRA's objection.

(d) *Disposition.* (1) If no comment objecting to the requested modification is received during the 60-day comment period, provided by paragraph (b) of this section, or if FRA does not issue a written objection to the requested modification, the modification will become effective 15 days after the close of the 60-day comment period.

(2) If an objection is raised by an interested party, during the 60-day comment period, or if FRA issues a written objection to the requested modification, the requested modification will be handled as follows:

(i) If FRA finds that the request complies with the requirements of this section and that the proposed modification is acceptable and justified, the request will be granted, normally within 90 days of its receipt. If the request for modification is neither granted nor denied within 90 days, the request remains pending for decision. FRA may attach special conditions to the approval of any request for modification. Following the approval of a request for modification, FRA may reopen consideration of the request for cause.

(ii) If FRA finds that the request does not comply with the requirements of this section and that the proposed modification is not acceptable or justified, the requested modification will be denied, normally within 90 days of its receipt.

(iii) When FRA grants or denies a request for modification, or reopens consideration of the request, written notice is sent to the requesting party and other interested parties.

[66 FR 39688, Aug. 1, 2001]

§ 232.309 Equipment and devices used to perform single car air brake tests.

(a) Equipment and devices used to perform single car air brake tests shall be tested for correct operation at least once each calendar day of use.

(b) Except for single car test devices, mechanical test devices such as pressure gauges, flow meters, orifices, etc. shall be calibrated once every 92 days.

(c) Electronic test devices shall be calibrated at least once every 365 days.

(d) Test equipment and single car test devices placed in service shall be tagged or labeled with the date its next calibration is due.

(e) Each single car test device shall be tested not less frequently than every 92 days after being placed in service and may not continue in service if more than one year has passed since its last 92-day test.

(f) Each single car test device shall be disassembled and cleaned not less frequently than every 365 days after being placed in service.

[66 FR 4193, Jan. 17, 2001, as amended at 66 FR 39689, Aug. 1, 2001]

Subpart E—End-of-Train Devices

§ 232.401 Scope.

This subpart contains the requirements related to the performance, operation, and testing of end-of-train devices. Unless expressly excepted in this subpart, the requirements of this subpart apply to all trains operating on track which is part of the general railroad system of transportation.

§ 232.403 Design standards for one-way end-of-train devices.

(a) *General.* A one-way end-of-train device shall be comprised of a rear-of-train unit (rear unit) located on the last car of a train and a front-of-train unit (front unit) located in the cab of the locomotive controlling the train.

(b) *Rear unit.* The rear unit shall be capable of determining the brake pipe pressure on the rear car and transmitting that information to the front unit for display to the locomotive engineer. The rear unit shall be—

(1) Capable of measuring the brake pipe pressure on the rear car with an

accuracy of ±3 pounds per square inch (psig) and brake pipe pressure variations of ±1 psig;

(2) Equipped with a ''bleeder valve'' that permits the release of any air under pressure from the rear of train unit or the associated air hoses prior to detaching the rear unit from the brake pipe;

(3) Designed so that an internal failure will not cause an undesired emergency brake application;

(4) Equipped with either an air gauge or a means of visually displaying the rear unit's brake pipe pressure measurement; and

(5) Equipped with a pressure relief safety valve to prevent explosion from a high pressure air leak inside the rear unit.

(c) *Reporting rate.* Multiple data transmissions from the rear unit shall occur immediately after a variation in the rear car brake pipe pressure of ±2 psig and at intervals of not greater than 70 seconds when the variation in the rear car brake pipe pressure over the 70-second interval is less than ±2 psig.

(d) *Operating environment.* The rear unit shall be designed to meet the performance requirements of paragraphs (b) and (c) of this section under the following environmental conditions:

(1) At temperatures from −40 °C to 60 °C;

(2) At a relative humidity of 95% noncondensing at 50 °C;

(3) At altitudes of zero to 12,000 feet mean sea level;

(4) During vertical and lateral vibrations of 1 to 15 Hz., with 0.5 g. peak to peak, and 15 to 500 Hz., with 5 g. peak to peak;

(5) During the longitudinal vibrations of 1 to 15 Hz., with 3 g. peak to peak, and 15 to 500 Hz., with 5 g. peak to peak; and

(6) During a shock of 10 g. peak for 0.1 second in any axis.

(e) *Unique code.* Each rear unit shall have a unique and permanent identification code that is transmitted along with the pressure message to the front-of-train unit. A code obtained from the Association of American Railroads, 50 F Street, NW., Washington, DC 20036 shall be deemed to be a unique code for purposes of this section. A unique code also may be obtained from the Office of Safety Assurance and Compliance (RRS–10), Federal Railroad Administration, Washington, DC 20590.

(f) *Front unit.* (1) The front unit shall be designed to receive data messages from the rear unit and shall be capable of displaying the rear car brake pipe pressure in increments not to exceed one pound.

(2) The display shall be clearly visible and legible in daylight and darkness from the engineer's normal operating position.

(3) The front device shall have a means for entry of the unique identification code of the rear unit being used. The front unit shall be designed so that it will display a message only from the rear unit with the same code as entered into the front unit.

(4) The front unit shall be designed to meet the requirements of paragraphs (d)(2), (3), (4), and (5) of this section. It shall also be designed to meet the performance requirements in this paragraph under the following environmental conditions:

(i) At temperatures from 0 °C to 60 °C;

(ii) During a vertical or lateral shock of 2 g. peak for 0.1 second; and

(iii) During a longitudinal shock of 5 g. peak for 0.1 second.

(g) *Radio equipment.* (1) The radio transmitter in the rear unit and the radio receiver in the front unit shall comply with the applicable regulatory requirements of the Federal Communications Commission (FCC) and use of a transmission format acceptable to the FCC.

(2) If power is supplied by one or more batteries, the operating life shall be a minimum of 36 hours at 0 °C.

§ 232.405 Design and performance standards for two-way end-of-train devices.

Two-way end-of-train devices shall be designed and perform with the features applicable to one-way end-of-train devices described in § 232.403, except those included in § 232.403(b)(3). In addition, a two-way end-of-train device shall be designed and perform with the following features:

(a) An emergency brake application command from the front unit of the device shall activate the emergency air

valve at the rear of the train within one second.

(b) The rear unit of the device shall send an acknowledgment message to the front unit immediately upon receipt of an emergency brake application command. The front unit shall listen for this acknowledgment and repeat the brake application command if the acknowledgment is not correctly received.

(c) The rear unit, on receipt of a properly coded command, shall open a valve in the brake line and hold it open for a minimum of 15 seconds. This opening of the valve shall cause the brake line to vent to the exterior.

(d) The valve opening shall have a minimum diameter of ¾ inch and the internal diameter of the hose shall be ⅝ inch to effect an emergency brake application.

(e) The front unit shall have a manually operated switch which, when activated, shall initiate an emergency brake transmission command to the rear unit or the locomotive shall be equipped with a manually operated switch on the engineer control stand designed to perform the equivalent function. The switch shall be labeled ''Emergency'' and shall be protected so that there will exist no possibility of accidental activation.

(f) All locomotives ordered on or after August 1, 2001, or placed in service for the first time on or after August 1, 2003, shall be designed to automatically activate the two-way end-of-train device to effectuate an emergency brake application whenever it becomes necessary for the locomotive engineer to place the train air brakes in emergency.

(g) The availability of the front-to-rear communications link shall be checked automatically at least every 10 minutes.

(h) Means shall be provided to confirm the availability and proper functioning of the emergency valve.

(i) Means shall be provided to arm the front and rear units to ensure the rear unit responds to an emergency command only from a properly associated front unit.

§ 232.407 Operations requiring use of two-way end-of-train devices; prohibition on purchase of nonconforming devices.

(a) *Definitions.* The following definitions are intended solely for the purpose of identifying those operations subject to the requirements for the use of two-way end-of-train devices.

(1) *Heavy grade* means:

(i) For a train operating with 4,000 trailing tons or less, a section of track with an average grade of two percent or greater over a distance of two continuous miles; and

(ii) For a train operating with greater than 4,000 trailing tons, a section of track with an average grade of one percent or greater over a distance of three continuous miles.

(2) *Train* means one or more locomotives coupled with one or more rail cars, except during switching operations or where the operation is that of classifying cars within a railroad yard for the purpose of making or breaking up trains.

(3) *Local train* means a train assigned to perform switching en route which operates with 4,000 trailing tons or less and travels between a point of origin and a point of final destination, for a distance that is no greater than that which can normally be operated by a single crew in a single tour of duty.

(4) *Work train* means a non-revenue service train of 4,000 trailing tons or less used for the administration and upkeep service of the railroad.

(5) *Trailing tons* means the sum of the gross weights—expressed in tons—of the cars and the locomotives in a train that are not providing propelling power to the train.

(b) *General.* All trains not specifically excepted in paragraph (e) of this section shall be equipped with and shall use either a two-way end-of-train device meeting the design and performance requirements contained in § 232.405 or a device using an alternative technology to perform the same function.

(c) *New devices.* Each newly manufactured end-of-train device purchased by a railroad after January 2, 1998 shall be a two-way end-of-train device meeting the design and performance requirements contained in § 232.405 or a device

using an alternative technology to perform the same function.

(d) *Grandfathering*. Each two-way end-of-train device purchased by any person prior to July 1, 1997 shall be deemed to meet the design and performance requirements contained in § 232.405.

(e) *Exceptions*. The following types of trains are excepted from the requirement for the use of a two-way end-of-train device:

(1) Trains with a locomotive or locomotive consist located at the rear of the train that is capable of making an emergency brake application, through a command effected by telemetry or by a crew member in radio contact with the controlling locomotive;

(2) Trains operating in the push mode with the ability to effectuate an emergency brake application from the rear of the train;

(3) Trains with an operational caboose placed at the rear of the train, carrying one or more crew members in radio contact with the controlling locomotive, that is equipped with an emergency brake valve;

(4) Trains operating with a secondary, fully independent braking system capable of safely stopping the train in the event of failure of the primary system;

(5) Trains that do not operate over heavy grades and do not exceed 30 mph;

(6) Local trains, as defined in paragraph (a)(3) of this section, that do not operate over heavy grades;

(7) Work trains, as defined in paragraph (a)(4) of this section, that do not operate over heavy grades;

(8) Trains that operate exclusively on track that is not part of the general railroad system;

(9) Trains that must be divided into two sections in order to traverse a grade (*e.g.*, doubling a hill). This exception applies only to the extent necessary to traverse the grade and only while the train is divided in two for such purpose;

(10) Passenger trains in which all of the cars in the train are equipped with an emergency brake valve readily accessible to a crew member;

(11) Passenger trains that have a car at the rear of the train, readily accessible to one or more crew members in radio contact with the engineer, that is equipped with an emergency brake valve readily accessible to such a crew member; and

(12) Passenger trains that have twenty-four (24) or fewer cars (not including locomotives) in the consist and that are equipped and operated in accordance with the following train-configuration and operating requirements:

(i) If the total number of cars in a passenger train consist is twelve (12) or fewer, a car located no less than halfway through the consist (counting from the first car in the train) must be equipped with an emergency brake valve readily accessible to a crew member;

(ii) If the total number of cars in a passenger train consist is thirteen (13) to twenty-four (24), a car located no less than two-thirds (⅔) of the way through the consist (counting from the first car in the train) must be equipped with an emergency brake valve readily accessible to a crew member;

(iii) Prior to descending a section of track with an average grade of two percent or greater over a distance of two continuous miles, the engineer of the train shall communicate with the conductor, to ensure that a member of the crew with a working two-way radio is stationed in the car with the rearmost readily accessible emergency brake valve on the train when the train begins its descent; and

(iv) While the train is descending a section of track with an average grade of two percent or greater over a distance of two continuous miles, a member of the train crew shall occupy the car that contains the rearmost readily accessible emergency brake valve on the train and be in constant radio communication with the locomotive engineer. The crew member shall remain in this car until the train has completely traversed the heavy grade.

(f) *Specific requirements for use*. If a train is required to use a two-way end-of-train device:

(1) That device shall be armed and operable from the time the train departs from the point where the device is installed until the train reaches its destination. If a loss of communication occurs at the location where the device is installed, the train may depart the

location at restricted speed for a distance of no more than one mile in order to establish communication. When communication is established, the quantitative values of the head and rear unit shall be compared pursuant to § 232.409(b) and the device tested pursuant to § 232.409(c), unless the test was performed prior to installation.

(2) The rear unit batteries shall be sufficiently charged at the initial terminal or other point where the device is installed and throughout the train's trip to ensure that the end-of-train device will remain operative until the train reaches its destination.

(3) The device shall be activated to effectuate an emergency brake application either by using the manual toggle switch or through automatic activation, whenever it becomes necessary for the locomotive engineer to initiate an emergency application of the air brakes using either the automatic brake valve or the conductor's emergency brake valve.

(g) *En route failure of device on a freight or other non-passenger train.* Except on passenger trains required to be equipped with a two-way end-of-train device (which are provided for in paragraph (h) of this section), en route failures of a two-way end-of-train device shall be handled in accordance with this paragraph. If a two-way end-of-train device or equivalent device fails en route (*i.e.*, is unable to initiate an emergency brake application from the rear of the train due to certain losses of communication (front to rear) or due to other reasons, the speed of the train on which it is installed shall be limited to 30 mph until the ability of the device to initiate an emergency brake application from the rear of the train is restored. This limitation shall apply to a train using a device that uses an alternative technology to serve the purpose of a two-way end-of-train device. With regard to two-way end-of-train devices, a loss of communication between the front and rear units is an en route failure only if the loss of communication is for a period greater than 16 minutes and 30 seconds. Based on the existing design of the devices, the display to an engineer of a message that there is a communication failure indicates that communication has been lost for 16 minutes and 30 seconds or more.

(1) If a two-way end-of-train device fails en route, the train on which it is installed, in addition to observing the 30-mph speed limitation, shall not operate over a section of track with an average grade of two percent or greater for a distance of two continuous miles, unless one of the following alternative measures is provided:

(i) Use of an occupied helper locomotive at the end of the train. This alternative may be used only if the following requirements are met:

(A) The helper locomotive engineer shall initiate and maintain two-way voice radio communication with the engineer on the head end of the train; this contact shall be verified just prior to passing the crest of the grade.

(B) If there is a loss of communication prior to passing the crest of the grade, the helper locomotive engineer and the head-end engineer shall act immediately to stop the train until voice communication is resumed, in accordance with the railroad's operating rules.

(C) If there is a loss of communication once the descent has begun, the helper locomotive engineer and the head-end engineer shall act to stop the train, in accordance with the railroad's operating rules, if the train has reached a predetermined rate of speed that indicates the need for emergency braking.

(D) The brake pipe of the helper locomotive shall be connected and cut into the train line and tested to ensure operation.

(ii) Use of an occupied caboose at the end of the train with a tested, functioning brake valve capable of initiating an emergency brake application from the caboose. This alternative may be used only if the train service employee in the caboose and the engineer on the head end of the train establish and maintain two-way voice radio communication and respond appropriately to the loss of such communication in the same manner as prescribed for helper locomotives in paragraph (g)(1)(i) of this section.

(iii) Use of a radio-controlled locomotive at the rear of the train under continuous control of the engineer in

the head end by means of telemetry, but only if such radio-controlled locomotive is capable of initiating an emergency application on command from the lead (controlling) locomotive.

(2) If a two-way end-of-train device fails en route while the train on which it is installed is operating over a section of track with an average grade of two percent or greater for a distance of two continuous miles, the train shall be brought safely to a stop at the first available location in accordance with the railroad's operating rule, except the train may continue in operation if the railroad provides one of the alternative measures detailed in paragraph (g)(1) of this section.

(h) *En route failure of device on a passenger train.* (1) A passenger train required to be equipped with a two-way end-of-train device that develops an en route failure of the device (as explained in paragraph (g) of this section) shall not operate over a section of track with an average grade of two percent or greater over a distance of two continuous miles until an operable two-way end-of-train device is installed on the train or an alternative method of initiating an emergency brake application from the rear of the train is achieved.

(2) Except as provided in paragraph (h)(1) of this section, a passenger train required to be equipped with a two-way end-of-train device that develops an en route failure of the device (as explained in paragraph (g) of this section) shall be operated in accordance with the following:

(i) A member of the train crew shall be immediately positioned in the car which contains the rearmost readily accessible emergency brake valve on the train and shall be equipped with an operable two-way radio that communicates with the locomotive engineer; and

(ii) The locomotive engineer shall periodically make running tests of the train's air brakes until the failure is corrected; and

(3) Each en route failure shall be corrected at the next location where the necessary repairs can be conducted or at the next location where a required brake test is to be performed, whichever is reached first.

[66 FR 4193, Jan. 17, 2001, as amended at 67 FR 17584, Apr. 10, 2002]

§ 232.409 Inspection and testing of end-of-train devices.

(a) After each installation of either the front or rear unit of an end-of-train device, or both, on a train and before the train departs, the railroad shall determine that the identification code entered into the front unit is identical to the unique identification code on the rear unit.

(b) After each installation of either the front or rear unit of an end-of-train device, or both, on a train and before the train departs, the functional capability of the device shall be determined, after charging the train, by comparing the quantitative value of the air pressure displayed on the front unit with the quantitative value of the air pressure displayed on the rear unit or on a properly calibrated air gauge. The end-of-train device shall not be used if the difference between the two readings exceeds three pounds per square inch.

(c) A two-way end-of-train device shall be tested at the initial terminal or other point of installation to determine that the device is capable of initiating an emergency power brake application from the rear of the train. If this test is conducted by a person other than a member of the train crew, the locomotive engineer shall be notified that a successful test was performed. The notification required by this paragraph may be provided to the locomotive engineer by any means determined appropriate by the railroad; however, a written or electronic record of the notification shall be maintained in the cab of the controlling locomotive and shall include the date and time of the test, the location where the test was performed, and the name of the person conducting the test.

(d) The telemetry equipment shall be tested for accuracy and calibrated if necessary according to the manufacturer's specifications and procedures at least every 368 days. The 368 days shall not include a shelf-life of up to 92 days prior to placing the unit in service. This test shall include testing radio

frequencies and modulation of the device. The date and location of the last calibration or test as well as the name of the person performing the calibration or test shall be legibly displayed on a weather-resistant sticker or other marking device affixed to the outside of both the front unit and the rear unit; however, if the front unit is an integral part of the locomotive or is inaccessible, then the information may recorded on Form FRA F6180–49A instead, provided that the serial number of the unit is recorded.

[66 FR 4193, Jan. 17, 2001, as amended at 66 FR 29502, May 31, 2001; 67 FR 17584, Apr. 10, 2002]

Subpart F—Introduction of New Brake System Technology

§ 232.501 Scope.

This subpart contains general requirements for introducing new brake system technologies. This subpart is intended to facilitate the introduction of new complete brake system technologies or major upgrades to existing systems which the current regulations do not adequately address (*i.e.*, electronic brake systems). This subpart is not intended for use in the introduction of a new brake component or material.

§ 232.503 Process to introduce new brake system technology.

(a) Pursuant to the procedures contained in § 232.17, each railroad shall obtain special approval from the FRA Associate Administrator for Safety of a pre-revenue service acceptance testing plan, developed pursuant to § 232.505, for the new brake system technology, prior to implementing the plan.

(b) Each railroad shall complete a pre-revenue service demonstration of the new brake system technology in accordance with the approved plan, shall fulfill all of the other requirements prescribed in § 232.505, and shall obtain special approval from the FRA Associate Administrator for Safety under the procedures of § 232.17 prior to using such brake system technology in revenue service.

§ 232.505 Pre-revenue service acceptance testing plan.

(a) *General; submission of plan.* Except as provided in paragraph (f) of this section, before using a new brake system technology for the first time on its system the operating railroad or railroads shall submit a pre-revenue service acceptance testing plan containing the information required by paragraph (e) of this section and obtain the approval of the FRA Associate Administrator for Safety, under the procedures specified in § 232.17.

(b) *Compliance with plan.* After receiving FRA approval of the pre-revenue service testing plan and before introducing the new brake system technology into revenue service, the operating railroad or railroads shall:

(1) Adopt and comply with such FRA-approved plan, including fully executing the tests required by the plan;

(2) Report to the FRA Associate Administrator for Safety the results of the pre-revenue service acceptance tests;

(3) Correct any safety deficiencies identified by FRA in the design of the equipment or in the inspection, testing, and maintenance procedures or, if safety deficiencies cannot be corrected by design or procedural changes, agree to comply with any operational limitations that may be imposed by the Associate Administrator for Safety on the revenue service operation of the equipment; and

(4) Obtain FRA approval to place the new brake system technology in revenue service.

(c) *Compliance with limitations.* The operating railroad shall comply with each operational limitation, if any, imposed by the Associate Administrator for Safety.

(d) *Availability of plan.* The plan shall be made available to FRA for inspection and copying upon request.

(e) *Elements of plan.* The plan shall include all of the following elements:

(1) An identification of each waiver, if any, of FRA or other Federal safety regulations required for the tests or for revenue service operation of the equipment.

(2) A clear statement of the test objectives. One of the principal test objectives shall be to demonstrate that

the equipment meets the safety design and performance requirements specified in this part when operated in the environment in which it is to be used.

(3) A planned schedule for conducting the tests.

(4) A description of the railroad property or facilities to be used to conduct the tests.

(5) A detailed description of how the tests are to be conducted. This description shall include:

(i) An identification of the equipment to be tested;

(ii) The method by which the equipment is to be tested;

(iii) The criteria to be used to evaluate the equipment's performance; and

(iv) The means by which the test results are to be reported to FRA.

(6) A description of any special instrumentation to be used during the tests.

(7) A description of the information or data to be obtained.

(8) A description of how the information or data obtained is to be analyzed or used.

(9) A description of any criteria to be used as safety limits during the testing.

(10) A description of the criteria to be used to measure or determine the success or failure of the tests. If acceptance is to be based on extrapolation of less than full level testing results, the analysis to be done to justify the validity of the extrapolation shall be described.

(11) A description of any special safety precautions to be observed during the testing.

(12) A written set of standard operating procedures to be used to ensure that the testing is done safely.

(13) Quality control procedures to ensure that the inspection, testing, and maintenance procedures are followed.

(14) Criteria to be used for the revenue service operation of the equipment.

(15) A description of all testing of the equipment that has previously been performed, if any.

(f) *Exception*. For brake system technologies that have previously been used in revenue service in the United States, the railroad shall test the equipment on its system, prior to placing it in revenue service, to ensure the compatibility of the equipment with the operating system (track, signals, etc.) of the railroad. A description of such testing shall be retained by the railroad and made available to FRA for inspection and copying upon request.

APPENDIX A TO PART 232—SCHEDULE OF CIVIL PENALTIES [1]

Section	Violation	Willful violation
Subpart A—General		
232.15 Movement of power brake defects:		
(a) Improper movement, general	(1)	(1)
(11) Failure to make determinations and provide notification of en route defect	$2,500	$5,000
(b) Complete failure to tag	2,500	5,000
(1) Insufficient tag or record	1,000	2,000
(2), (4) Improper removal of tag	2,000	4,000
(3) Failure to retain record of tag	2,000	4,000
(c) Improper loading or purging	2,500	5,000
(e) Improper placement of defective equipment	2,500	5,000
232.19 Availability of records	(1)	(1)
Subpart B—General Requirements		
232.103 All train brake systems:		
(a)–(c), (h)–(i) Failure to meet general design requirements	2,500	5,000
(d) Failure to have proper percentage of operative brakes from Class I brake test	5,000	7,500
(e) Operating with less than 85 percent operative brakes	5,000	7,500
(f) Improper use of car with inoperative or ineffective brakes	2,500	5,000
(g) Improper display of piston travel	2,500	5,000
(m) Failure to stop train with excess air flow or gradient	2,500	5,000
(n) Securement of unattended equipment:	.....	.....
(1) Failure to apply sufficient number of hand brakes; failure to develop or implement procedure to verify number applied	5,000	7,500
(2) Failure to initiate emergency	2,500	5,000
(3) Failure to apply hand brakes on locomotives	2,500	5,000
(4) Failure to adopt or comply with procedures for securing unattended locomotive	5,000	7,500

Section	Violation	Willful violation
(o) Improper adjustment of air regulating devices	2,500	5,000
(p) Failure to hold supervisors jointly responsible	2,500	5,000
232.105 Locomotives:		
(a) Air brakes not in safe and suitable condition	1,000–5,000	2,000–7,500
(b) Not equipped with proper hand or parking brake	5,000	7,500
(c)(1) Failure to inspect/repair hand or parking brake	2,500	5,000
(2) Failure to properly stencil, tag, or record	2,000	4,000
(d) Excess leakage from equalizing reservoir	2,500	5,000
(e) Improper use of feed or regulating valve braking	2,500	5,000
(f) Improper use of passenger position	2,500	5,000
(g) Brakes in operative condition	2,500	5,000
232.107 Air sources/cold weather operations:		
(a)(1), (2) Failure to adopt or comply with monitoring program for yard air sources	5,000	7,500
(3) Failure to maintain records	2,500	5,000
(b) Failure to blow condensation	2,500	5,000
(c) Use of improper chemicals	5,000	7,500
(d) Failure to equip or drain yard air reservoirs	2,500	5,000
(e) Failure to adopt or comply cold weather operating procedures	5,000	7,500
232.109 Dynamic brakes:		
(a) Failure to provide information	5,000	7,500
(b) Failure to make repairs	5,000	7,500
(c) Failure to properly tag	2,500	5,000
(d) Failure to maintain record of repair	2,000	4,000
(e) Improper deactivation	2,500	5,000
(f) Improper use of locomotive as controlling unit	2,500	5,000
(g) Locomotive not properly equipped with indicator	2,500	5,000
(h) Rebuilt locomotive not properly equipped	2,500	5,000
(j) Failure to adopt or comply with dynamic brake operating rules	5,000	7,500
(k) Failure to adopt or comply with training on operating procedures	5,000	7,500
232.111 Train handling information:		
(a) Failure to adopt and comply with procedures	5,000	7,500
(b) Failure to provide specific information	2,500	5,000
Subpart C—Inspection and Testing Requirements		
232.203 Training requirements:		
(a) Failure to develop or adopt program	7,500	11,000
(b)(1)–(9) Failure to address or comply with specific required item or provision of program	5,000	7,500
(c) Failure to adopt or comply with two-way EOT program	5,000	7,500
(d) Failure to adopt or comply with retaining valve program	5,000	7,500
(e) Failure to maintain adequate records	5,000	7,500
(f) Failure to adopt and comply with periodic assessment plan	7,500	11,000
232.205 Class I brake test—initial terminal inspection:		
(a) Complete failure to perform inspection	(1)10,000	15,000
(c)(1)–(4), (6)–(8) Partial failure to perform inspection	5,000	7,500
(c)(5) Failure to properly adjust piston travel (per car)	2,500	5,000
(d) Failure to use carman when required	5,000	7,500
(e) Failure to provide proper notification	2,500	5,000
(f) Failure to void compressed air	2,500	5,000
232.207 Class IA brake tests—1,000-mile inspection:		
(a) Complete failure to perform inspection	(1)5,000	7,500
(b)(1)–(6) Partial failure to perform inspection	2,500	5,000
(c) Failure to properly designate location	5,000	7,500
(c)(1) Failure to perform at designated location	5,000	7,500
(c)(2) Failure to provide notification	2,500	5,000
232.209 Class II brake tests—intermediate inspection:		
(a) Complete failure to perform inspection	(1)5,000	7,500
(b)(1)–(5), (c) Partial failure to perform inspection	2,500	5,000
(d) Failure to conduct Class I after Class II pick-up	(1)	(1)
232.211 Class III brake tests—trainline continuity inspection:		
(a) Complete failure to perform inspection	5,000	7,500
(b)(1)–(4), (c) Partial failure to perform inspection	2,500	5,000
(d) Failure to restore air pressure at rear	2,500	2,500
232.213 Extended haul trains:		
(a)(1) Failure to properly designate an extended haul train	5,000	7,500
(a)(2)–(3), (5)(i), (8) Failure to perform inspections	(1)	(1)
(a)(4) Failure to remove defective car (per car)	2,000	4,000
(a)(5)(ii), (6) Failure to conduct inbound inspection	5,000	7,500
(a)(7) Failure to maintain record of defects (per car)	2,000	4,000
(b) Improper movement or use of extended haul train	5,000	7,500
232.215 Transfer train brake tests:		
(a) Failure to perform inspection	5,000	7,500
(b) Failure to perform on cars added	2,500	5,000

Section	Violation	Willful violation
232.217 Train brake system tests conducted using yard air:		
(a) Failure to use suitable device	2,500	5,000
(b) Improper connection of air test device	5,000	7,500
(c) Failure to properly perform inspection	(1)	(1)
(d) Failure to calibrate test device	2,500	5,000
(e) Failure to use accurate device	2,500	5,000
232.219 Double heading and helper service:		
(a) Failure to perform inspection or inability to control brakes	2,500	5,000
(b) Failure to make visual inspection	2,500	5,000
(c) Use of improper helper link device	2,500	5,000
Subpart D—Periodic Maintenance and Testing Requirements		
232.303 General requirements:		
(b)–(d) Failure to conduct inspection or test when car on repair track	2,500	5,000
(e) Improper movement of equipment for testing	2,500	5,000
(e)(1) Failure to properly tag equipment for movement	2,000	5,000
(e)(2)–(4) Failure to retain record or improper removal of tag or card	2,000	4,000
(f) Failure to stencil or track test information	2,500	5,000
232.305 Repair track air brake tests:		
(a) Failure to test in accord with required procedure	2,500	5,000
(b)–(d) Failure to perform test	2,500	5,000
232.307 Single car tests:		
(a) Failure to test in accord with required procedure	2,500	5,000
(b)–(c) Failure to perform test	2,500	5,000
232.309 Repair track air brake test and single car test equipment and devices:		
(a)–(f) Failure to properly test or calibrate	2,500	5,000
Subpart E—End-of-Train Devices		
232.403 Design standards for one-way devices:		
(a)–(g) Failure to meet standards	2,500	5,000
232.405 Design standards for two-way devices:		
(a)–(i) Failure to meet standards	2,500	5,000
232.407 Operating requirements for two-way devices:		
(b) Failure to equip a train	5,000	7,500
(c) Improper purchase	2,500	5,000
(f)(1) Failure of device to be armed and operable	5,000	7,500
(f)(2) Insufficient battery charge	2,500	5,000
(f)(3) Failure to activate the device	2,500	5,000
(g) Improper handling of en route failure, freight or other non-passenger	5,000	7,500
(h) Improper handling of en route failure, passenger	5,000	7,500
232.409 Inspection and testing of devices:		
(a) Failure to have unique code	2,500	5,000
(b) Failure to compare quantitative values	2,500	5,000
(c) Failure to test emergency capability	5,000	7,500
(d) Failure to properly calibrate	2,500	5,000
Subpart F—Introduction of New Brake System Technology		
232.503 Process to introduce new technology:		
(b) Failure to obtain FRA approval	10,000	15,000
232.505 Pre-revenue service acceptance testing plan:		
(a) Failure to obtain FRA approval	5,000	7,500
(b) Failure to comply with plan	2,500	5,000
(f) Failure to test previously used technology	5,000	7,500

[1] A penalty may be assessed against an individual only for a willful violation. Generally, when two or more violations of these regulations are discovered with respect to a single unit of equipment that is placed or continued in service by a railroad, the appropriate penalties set forth above are aggregated up to a maximum of $16,000 per day. An exception to this rule is the $15,000 penalty for willful violation of § 232.503 (failure to get FRA approval before introducing new technology) with respect to a single unit of equipment; if the unit has additional violative conditions, the penalty may routinely be aggregated to $15,000. Although the penalties listed for failure to perform the brake inspections and tests under § 232.205 through § 232.209 may be assessed for each train that is not properly inspected, failure to perform any of the inspections and tests required under those sections will be treated as a violation separate and distinct from, and in addition to, any substantive violative conditions found on the equipment contained in the train consist. Moreover, the Administrator reserves the right to assess a penalty of up to $27,000 for any violation where circumstances warrant. *See* 49 CFR part 209, appendix A.

Failure to observe any condition for movement of defective equipment set forth in § 232.15(a) will deprive the railroad of the benefit of the movement-for-repair provision and make the railroad and any responsible individuals liable for penalty under the particular regulatory section(s) concerning the substantive defect(s) present on the equipment at the time of movement.

Failure to provide any of the records or plans required by this part pursuant to § 232.19 will be considered a failure to maintain or develop the record or plan and will make the railroad liable for penalty under the particular regulatory section(s) concerning the retention or creation of the document involved.

Failure to properly perform any of the inspections specifically referenced in § 232.209, § 232.213, and § 232.217 may be assessed under each section of this part or this chapter, or both, that contains the requirements for performing the referenced inspection.

[66 FR 4193, Jan. 17, 2001, as amended at 69 FR 30594, May 28, 2004; 72 FR 51197, Sept. 6, 2007]

APPENDIX B TO PART 232—PART 232 PRIOR TO MAY 31, 2001 AS CLARIFIED EFFECTIVE APRIL 10, 2002

PART 232—RAILROAD POWER BRAKES AND DRAWBARS

Sec.
232.0 Applicability and penalties.
232.1 Power brakes; minimum percentage.
232.2 Drawbars; standard height.
232.3 Power brakes and appliances for operating power-brake systems.
232.10 General rules; locomotives.
232.11 Train air brake system tests.
232.12 Initial terminal road train airbrake tests.
232.13 Road train and intermediate terminal train air brake tests.
232.14 Inbound brake equipment inspection.
232.15 Double heading and helper service.
232.16 Running tests.
232.17 Freight and passenger train car brakes.
232.19 End of train device.
APPENDIX A TO PART 232
APPENDIX B TO PART 232

AUTHORITY: 45 U.S.C. 1, 3, 5, 6, 8–12, and 16, as amended; 45 U.S.C. 431, 438, as amended; 49 app. U.S.C. 1655(e), as amended; Pub. L. 100–342; and 49 CFR 1.49(c), (g), and (m).

I. PART 232 PRIOR TO MAY 31, 2001.

§ 232.0 Applicability and penalties.

(a) Except as provided in paragraph (b), this part applies to all standard gage railroads.

(b) This part does not apply to:

(1) A railroad that operates only on track inside an installation which is not part of the general railroad system of transportation; or

(2) Rapid transit operations in an urban area that are not connected with the general railroad system of transportation.

(c) As used in this part, carrier means ''railroad,'' as that term is defined below.

(d) Railroad means all forms of non-highway ground transportation that run on rails or electromagnetic guideways, including (1) commuter or other short-haul rail passenger service in a metropolitan or suburban area, and (2) high speed ground transportation systems that connect metropolitan areas, without regard to whether they use new technologies not associated with traditional railroads. Such term does not include rapid transit operations within an urban area that are not connected to the general railroad system of transportation.

(e) Any person (including a railroad and any manager, supervisor, official, or other employee or agent of a railroad) who violates any requirement of this part or causes the violation of any such requirement is subject to a civil penalty of at least $250 and not more than $10,000 per violation, except that: Penalties may be assessed against individuals only for willful violations, and, where a grossly negligent violation or a pattern of repeated violations has created an imminent hazard of death or injury to persons, or has caused death or injury, a penalty not to exceed $20,000 per violation may be assessed. Each day a violation continues shall constitute a separate offense.

§ 232.1 Power brakes; minimum percentage.

On and after September 1, 1910, on all railroads used in interstate commerce, whenever, as required by the Safety Appliance Act as amended March 2, 1903, any train is operated with power or train brakes, not less than 85 percent of the cars of such train shall have their brakes used and operated by the engineer of the locomotive drawing such train, and all power-brake cars in every such train which are associated together with the 85 percent shall have their brakes so used and operated.

§ 232.2 Drawbars; standard Height.

Not included in this Appendix. Moved to 49 CFR part 231.

§ 232.3 Power brakes and appliances for operating power-brake systems.

(a) The specifications and requirement for power brakes and appliances for operating power-brake systems for freight service set forth in the appendix to the report on further hearing, of May 30, 1945, are hereby adopted and prescribed. (See appendix to this part for order in Docket 13528.)

Rules for Inspection, Testing and Maintenance of Air Brake Equipment

§ 232.10 General rules; locomotives.

(a) Air brake and hand brake equipment on locomotives including tender must be inspected and maintained in accordance with the requirements of the Locomotive Inspection and United States Safety Appliance Acts and related orders and regulations of the Federal Railroad Administrator (FRA).

(b) It must be known that air brake equipment on locomotives is in a safe and suitable condition for service.

(c) Compressor or compressors must be tested for capacity by orifice test as often as conditions require but not less frequently than required by law and orders of the FRA.

(d) Main reservoirs shall be subjected to tests periodically as required by law and orders of the FRA.

(e) Air gauges must be tested periodically as required by law and orders of the FRA,

and whenever any irregularity is reported. They shall be compared with an accurate deadweight tester, or test gauge. Gauges found inaccurate or defective must be repaired or replaced.

(f)(1) All operating portions of air brake equipment together with dirt collectors and filters must be cleaned, repaired and tested as often as conditions require to maintain them in a safe and suitable condition for service, and not less frequently than required by law and orders of the FRA.

(2) On locomotives so equipped, hand brakes, parts, and connections must be inspected, and necessary repairs made as often as the service requires, with date being suitably stenciled or tagged.

(g) The date of testing or cleaning of air brake equipment and the initials of the shop or station at which the work was done shall be placed on a card displayed under transparent covering in the cab of each locomotive unit.

(h)(1) Minimum brake cylinder piston travel must be sufficient to provide proper brake shoe clearance when brakes are released.

(2) Maximum brake cylinder piston travel when locomotive is standing must not exceed the following:

	Inches
Steam locomotives:	
Cam type of driving wheel brake	3½
Other types of driving wheel brakes	6
Engine truck brake	8
Engine trailer truck brake	8
Tender brake (truck mounted and tender bed mounted)	8
Tender brake (body mounted)	9
Locomotives other than steam:	
Driving wheel brake	6
Swivel type truck brake with brakes on more than one truck operated by one brake cylinder	7
Swivel type truck brake equipped with one brake cylinder	8
Swivel type truck brake equipped with two or more brake cylinders	6

(i)(1) Foundation brake rigging, and safety supports, where used, must be maintained in a safe and suitable condition for service. Levers, rods, brake beams, hangars and pins must be of ample strength and must not bind or foul in any way that will affect proper operation of brakes. All pins must be properly applied and secured in place with suitable locking devices. Brake shoes must be properly applied and kept approximately in line with treads of wheels or other braking surfaces.

(2) No part of the foundation brake rigging and safety supports shall be closer to the rails than specified by law and orders of the FRA.

(j)(1) Main reservoir leakage: Leakage from main air reservoir and related piping shall not exceed an average of 3 pounds per minute in a test of three minutes' duration, made after the pressure has been reduced 40 percent below maximum pressure.

(2) Brake pipe leakage: Brake pipe leakage must not exceed 5 pounds per minute after a reduction of 10 pounds has been made from brake pipe air pressure of not less than 70 pounds.

(3) Brake cylinder leakage: With a full service application of brakes, and with communication to the brake cylinders closed, brakes must remain applied not less than five minutes.

(4) The main reservoir system of each unit shall be equipped with at least one safety valve, the capacity of which shall be sufficient to prevent an accumulation of pressure of more than 10 pounds per square inch above the maximum setting of the compressor governor fixed by the chief mechanical officer of the carrier operating the locomotive.

(5) A suitable governor shall be provided that will stop and start the air compressor within 5 pounds above or below the pressures fixed.

(6) Compressor governor when used in connection with the automatic air brake system shall be so adjusted that the compressor will start when the main reservoir pressure is not less than 15 pounds above the maximum brake-pipe pressure fixed by the rules of the carrier and will not stop the compressor until the reservoir pressure has increased not less than 10 pounds.

(k) The communicating signal system on locomotives when used in passenger service must be tested and known to be in a safe and suitable condition for service before each trip.

(l) Enginemen when taking charge of locomotives must know that the brakes are in operative condition.

(m) In freezing weather drain cocks on air compressors of steam locomotives must be left open while compressors are shut off.

(n) Air pressure regulating devices must be adjusted for the following pressures:

	Pounds
Locomotives:	
(1) Minimum brake pipe air pressure:	
Road Service	70
Switch Service	60
(2) Minimum differential between brake pipe and main reservoir air pressures, with brake valve in running position	15
(3) Safety valve for straight air brake	30–55
(4) Safety valve for LT, ET, No. 8–EL, No. 14 El, No. 6–DS, No. 6–BL and No. 6–SL equipment	30–68
(5) Safety valve for HSC and No. 24–RL equipment	30–75
(6) Reducing valve for independent or straight air brake	30–50
(7) Self-lapping portion for electro-pneumatic brake (minimum full application pressure)	50

	Pounds
(8) Self-lapping portion for independent air brake (full application pressure)	30–50
(9) Reducing valve for air signal	40–60
(10) Reducing valve for high-speed brake (minimum)	50
Cars:	
(11) Reducing valve for high-speed brake	58–62
(12) Safety valve for PS, LN, UC, AML, AMU and AB–1–B air brakes	58–62
(13) Safety valve for HSC air brake	58–77
(14) Governor valve for water raising system	60
(15) Reducing valve for water raising system	20–30

§ 232.11 Train Air Brake System Tests.

(a) Supervisors are jointly responsible with inspectors, enginemen and trainmen for condition of train air brake and air signal equipment on motive power and cars to the extent that it is possible to detect defective equipment by required air tests.

(b) Communicating signal system on passenger equipment trains must be tested and known to be in a suitable condition for service before leaving terminal.

(c) Each train must have the air brakes in effective operating condition, and at no time shall the number and location of operative air brakes be less than permitted by Federal requirements. When piston travel is in excess of 10½ inches, the air brakes cannot be considered in effective operating condition.

(d) Condensation must be blown from the pipe from which air is taken before connecting yard line or motive power to train.

§ 232.12 Initial Terminal Road Train Airbrake Tests.

(a)(1) Each train must be inspected and tested as specified in this section by a qualified person at points—

(i) Where the train is originally made up (initial terminal);

(ii) Where train consist is changed, other than by adding or removing a solid block of cars, and the train brake system remains charged; and

(iii) Where the train is received in interchange if the train consist is changed other than by—

(A) Removing a solid block of cars from the head end or rear end of train;

(B) Changing motive power;

(C) Removing or changing the caboose; or

(D) Any combination of the changes listed in (A), (B), and (C) of this subparagraph.

Where a carman is to perform the inspection and test under existing or future collective bargaining agreement, in those circumstances a carman alone will be considered a qualified person.

(2) A qualified person participating in the test and inspection or who has knowledge that it was made shall notify the engineer that the initial terminal road train air brake test has been satisfactorily performed. The qualified person shall provide the notification in writing if the road crew will report for duty after the qualified person goes off duty. The qualified person also shall provide the notification in writing if the train that has been inspected is to be moved in excess of 500 miles without being subjected to another test pursuant to either this section or § 232.13 of this part.

(b) Each carrier shall designate additional inspection points not more than 1,000 miles apart where intermediate inspection will be made to determine that—

(1) Brake pipe pressure leakage does not exceed five pounds per minute;

(2) Brakes apply on each car in response to a 20-pound service brake pipe pressure reduction; and

(3) Brake rigging is properly secured and does not bind or foul.

(c) Train airbrake system must be charged to required air pressure, angle cocks and cutout cocks must be properly positioned, air hose must be properly coupled and must be in condition for service. An examination must be made for leaks and necessary repairs made to reduce leakage to a minimum. Retaining valves and retaining valve pipes must be inspected and known to be in condition for service. If train is to be operated in electro-pneumatic brake operation, brake circuit cables must be properly connected.

(d)(1) After the airbrake system on a freight train is charged to within 15 pounds of the setting of the feed valve on the locomotive, but to not less than 60 pounds, as indicated by an accurate gauge at rear end of train, and on a passenger train when charged to not less than 70 pounds, and upon receiving the signal to apply brakes for test, a 15-pound brake pipe service reduction must be made in automatic brake operations, the brake valve lapped, and the number of pounds of brake pipe leakage per minute noted as indicated by brake pipe guage, after which brake pipe reduction must be increased to full service. Inspection of the train brakes must be made to determine that angle cocks are properly positioned, that the brakes are applied on each car, that piston travel is correct, that brake rigging does not bind or foul, and that all parts of the brake equipment are properly secured. When this inspection has been completed, the release signal must be given and brakes released and each brake inspected to see that all have released.

(2) When a passenger train is to be operated in electro-pneumatic brake operation and after completion of test of brakes as prescribed by paragraph (d)(1) of this section the brake system must be recharged to not less than 90 pounds air pressure, and upon receiving the signal to apply brakes for test, a

minimum 20 pounds electro-pneumatic brake application must be made as indicated by the brake cylinder gage. Inspection of the train brakes must then be made to determine if brakes are applied on each car. When this inspection has been completed, the release signal must be given and brakes released and each brake inspected to see that all have released.

(3) When the locomotive used to haul the train is provided with means for maintaining brake pipe pressure at a constant level during service application of the train brakes, this feature must be cut out during train airbrake tests.

(e) Brake pipe leakage must not exceed 5 pounds per minute.

(f)(1) At initial terminal piston travel of body-mounted brake cylinders which is less than 7 inches or more than 9 inches must be adjusted to nominally 7 inches.

(2) Minimum brake cylinder piston travel of truck-mounted brake cylinders must be sufficient to provide proper brake shoe clearance when brakes are released. Maximum piston travel must not exceed 6 inches.

(3) Piston travel of brake cylinders on freight cars equipped with other than standard single capacity brake, must be adjusted as indicated on badge plate or stenciling on car located in a conspicuous place near the brake cylinder.

(g) When test of airbrakes has been completed the engineman and conductor must be advised that train is in proper condition to proceed.

(h) During standing test, brakes must not be applied or released until proper signal is given.

(i)(1) When train airbrake system is tested from a yard test plant, an engineer's brake valve or an appropriate test device shall be used to provide increase and reduction of brake pipe air pressure or electro-pneumatic brake application and release at the same or a slower rate as with engineer's brake valve and yard test plant must be connected to the end which will be nearest to the hauling road locomotive.

(2) When yard test plant is used, the train airbrakes system must be charged and tested as prescribed by paragraphs (c) to (g) of this section inclusive, and when practicable should be kept charged until road motive power is coupled to train, after which, an automatic brake application and release test of airbrakes on rear car must be made. If train is to be operated in electro-pneumatic brake operation, this test must also be made in electro-pneumatic brake operation before proceeding.

(3) If after testing the brakes as prescribed in paragraph (i)(2) of this section the train is not kept charged until road motive power is attached, the brakes must be tested as prescribed by paragraph (d)(1) of this section and if train is to be operated in electro-pneumatic brake operation as prescribed by paragraph (d)(2) of this section.

(j) Before adjusting piston travel or working on brake rigging, cutout cock in brake pipe branch must be closed and air reservoirs must be drained. When cutout cocks are provided in brake cylinder pipes, these cutout cocks only may be closed and air reservoirs need not be drained.

§ 232.13 Road train and intermediate terminal train air brake tests.

(a) *Passenger trains.* Before motive power is detached or angle cocks are closed on a passenger train operated in either automatic or electro-pneumatic brake operation, except when closing angle cocks for cutting off one or more cars from the rear end of train, automatic air brake must be applied. After recouping, brake system must be recharged to required air pressure and before proceeding and upon receipt of proper request or signal, application and release tests of brakes on rear car must be made from locomotive in automatic brake operation. If train is to be operated in electro-pneumatic brake operation, this test must also be made in electro-pneumatic brake operation before proceeding. Inspector or trainman must determine if brakes on rear car of train properly apply and release.

(b) *Freight trains.* Before motive power is detached or angle cocks are closed on a freight train, brakes must be applied with not less than a 20-pound brake pipe reduction. After recoupling, and after angle cocks are opened, it must be known that brake pipe air pressure is being restored as indicated by a rear car gauge or device. In the absence of a rear car gauge or device, an air brake test must be made to determine that the brakes on the rear car apply and release.

(c)(1)At a point other than an initial terminal where a locomotive or caboose is changed, or where one or more consecutive cars are cut off from the rear end or head end of a train with the consist otherwise remaining intact, after the train brake system is charged to within 15 pounds of the feed valve setting on the locomotive, but not less than 60 pounds as indicated at the rear of a freight train and 70 pounds on a passenger train, a 20-pound brake pipe reduction must be made and it must be determined that the brakes on the rear car apply and release. As an alternative to the rear car brake application and release test, it shall be determined that brake pipe pressure of the train is being reduced as indicated by a rear car gauge or device and then that brake pipe pressure of the train is being restored as indicated by a rear car gauge or device.

(2) Before proceeding it must be known that brake pipe pressure as indicated at rear of freight train is being restored.

(3) On trains operating with electro-pneumatic brakes, with brake system charged to

not less than 70 pounds, test must be made to determine that rear brakes apply and release properly from a minimum 20 pounds electro-pneumatic brake application as indicated by brake cylinder gauge.

(d)(1) At a point other than a terminal where one or more cars are added to a train, after the train brake system is charged to not less than 60 pounds as indicated by a gauge or device at the rear of a freight train and 70 pounds on a passenger train. A brake test must be made by a designated person as described in §232.12 (a)(1) to determine that brake pipe leakage does not exceed five (5) pounds per minute as indicated by the brake pipe gauge after a 20-pound brake pipe reduction has been made. After the test is completed, it must be determined that piston travel is correct, and the train airbrakes of these cars and on the rear car of the train apply and remain applied, until the release signal is given. As an alternative to the rear car brake application and release portion of the test, it shall be determined that brake pipe pressure of the train is being reduced as indicated by a rear car gauge or device and then that brake pipe pressure of the train is being restored as indicated by a rear car gauge or device. Cars added to a train that have not been inspected in accordance with §232.12 (c) through (j) must be so inspected and tested at the next terminal where facilities are available for such attention.

(d)(2)(i) At a terminal where a solid block of cars, which has been previously charged and tested as prescribed by §232.13 (c) through (j), is added to a train, it must be determined that the brakes on the rear car of the train apply and release. As an alternative to the rear car application and release test, it shall be determined that brake pipe pressure of the train is being reduced as indicated by a rear car gauge or device and then that brake pipe pressure of the train is being restored as indicated by a rear car gauge or device.

(d)(2)(ii) When cars which have not been previously charged and tested as prescribed by §232.12 (c) through (j) are added to a train, such cars may either be given inspection and tests in accordance with §232.12 (c) through (j), or tested as prescribed by paragraph (d)(1) of this section prior to departure in which case these cars must be inspected and tested in accordance with §232.12 (c) through (j) at next terminal.

(3) Before proceeding it must be known that the brake pipe pressure at the rear of freight train is being restored.

(e)(1) Transfer train and yard train movements not exceeding 20 miles, must have the air brake hose coupled between all cars, and after the brake system is charged to not less than 60 pounds, a 15 pound service brake pipe reduction must be made to determine that the brakes are applied on each car before releasing and proceeding.

(2) Transfer train and yard train movements exceeding 20 miles must have brake inspection in accordance with §232.12 (c)–(j).

(f) The automatic air brake must not be depended upon to hold a locomotive, cars or train, when standing on a grade, whether locomotive is attached or detached from cars or train. When required, a sufficient number of hand brakes must be applied to hold train, before air brakes are released. When ready to start, hand brakes must not be released until it is known that the air brake system is properly charged.

(g) As used in this section, device means a system of components designed and inspected in accordance with §232.19.

(h) When a device is used to comply with any test requirement in this section, the phrase brake pipe pressure of the train is being reduced means a pressure reduction of at least five pounds and the phrase brake pipe pressure of the train is being restored means a pressure increase of at least five pounds.

§232.14 Inbound Brake Equipment Inspection.

(a) At points where inspectors are employed to make a general inspection of trains upon arrival at terminals, visual inspection must be made of retaining valves and retaining valve pipes, release valves and rods, brake rigging, safety supports, hand brakes, hose and position of angle cocks and make necessary repairs or mark for repair tracks any cars to which yard repairs cannot be promptly made.

(b) Freight trains arriving at terminals where facilities are available and at which special instructions provide for immediate brake inspection and repairs, trains shall be left with air brakes applied by a service brake pipe reduction of 20 pounds so that inspectors can obtain a proper check of the piston travel. Trainmen will not close any angle cock or cut the locomotive off until the 20 pound service reduction has been made. Inspection of the brakes and needed repairs should be made as soon thereafter as practicable.

§232.15 Double Heading and Helper Service.

(a) When more than one locomotive is attached to a train, the engineman of the leading locomotive shall operate the brakes. On all other motive power units in the train the brake pipe cutout cock to the brake valve must be closed, the maximum main reservoir pressure maintained and brake valve handles kept in the prescribed position. In case it becomes necessary for the leading locomotive to give up control of the train short of the destination of the train, a test of the brakes must be made to see that the brakes are operative from the automatic brake valve of the locomotive taking control of the train.

(b) The electro-pneumatic brake valve on all motive power units other than that which is handling the train must be cut out, handle of brake valve kept in the prescribed position, and air compressors kept running if practicable.

§ 232.16 Running Tests.

When motive power, engine crew or train crew has been changed, angle cocks have been closed except for cutting off one or more cars from the rear end of train or electro-pneumatic brake circuit cables between power units and/or cars have been disconnected, running test of train air brakes on passenger train must be made, as soon as speed of train permits, by use of automatic brake if operating in automatic brake operation or by use of electro-pneumatic brake if operating in electro-pneumatic brake operation. Steam or power must not be shut off unless required and running test must be made by applying train air brakes with sufficient force to ascertain whether or not brakes are operating properly. If air brakes do not properly operate, train must be stopped, cause of failure ascertained and corrected and running test repeated.

§ 232.17 Freight and passenger train car brakes.

(a) *Testing and repairing brakes on cars while on shop or repair tracks.* (1) When a freight car having brake equipment due for periodic attention is on shop or repair tracks where facilities are available for making air brake repairs, brake equipment must be given attention in accordance with the requirements of the currently effective AAR Code of Rules for cars in interchange. Brake equipment shall then be tested by use of a single car testing device as prescribed by the currently effective AAR Code of Tests.

(2)(i) When a freight car having an air brake defect is on a shop or repair track, brake equipment must be tested by use of a single car testing device as prescribed by currently effective AAR Code of Tests.

(ii) All freight cars on shop or repair tracks shall be tested to determine that the air brakes apply and release. Piston travel on a standard body mounted brake cylinder which is less than 7 inches or more than 9 inches must be adjusted to nominally 7 inches. Piston travel of brake cylinders on all freight cars equipped with other than standard single capacity brake, must be adjusted as indicated on badge plate or stenciling on car located in a conspicuous place near brake cylinder. After piston travel has been adjusted and with brakes released, sufficient brake shoe clearance must be provided.

(iii) When a car is equipped for use in passenger train service not due for periodical air brake repairs, as indicated by stenciled or recorded cleaning dates, is on shop or repair tracks, brake equipment must be tested by use of single car testing device as prescribed by currently effective AAR Code of Tests. Piston travel of brake cylinders must be adjusted if required, to the standard travel for that type of brake cylinder. After piston travel has been adjusted and with brakes released, sufficient brake shoe clearance must be provided.

(iv) Before a car is released from a shop or repair track, it must be known that brake pipe is securely clamped, angle cocks in proper position with suitable clearance, valves, reservoirs and cylinders tight on supports and supports securely attached to car.

(b)(1) Brake equipment on cars other than passenger cars must be cleaned, repaired, lubricated and tested as often as required to maintain it in a safe and suitable condition for service but not less frequently than as required by currently effective AAR Code of Rules for cars in interchange.

(2) Brake equipment on passenger cars must be clean, repaired, lubricated and tested as often as necessary to maintain it in a safe and suitable condition for service but not less frequently than as required in Standard S–045 in the Manual of Standards and Recommended Practices of the AAR.

(3) Copies of the materials referred to in this section can be obtained from the Association of American Railroads, 1920 L Street, NW., Washington, DC 20036.

§ 232.19 through § 232.25 Provisions related to end-of-train devices.

Not included in this Appendix as they are contained in Subpart E of this rule.

II. CLARIFICATION EFFECTIVE APRIL 10, 2002.

This subdivision II contains the following clarifications of 49 CFR part 232 as it read before May 31, 2001. Section 232.13(d)(2)(i) is amended to correct a typographical error made in 1986. *See* 33 FR 19679, 51 FR 17303. Section 232.17(a)(2)(iii) is amended to clarify that the single car test required to be performed pursuant to this paragraph may be conducted in accordance with the applicable AAR Code of Tests or the American Public Transportation Association standard referenced in 49 CFR 238.311(a). Section 232.17(b)(3) is amended by inserting FRA's current address as the location where the standards and procedures referenced in § 232.17 can be obtained.

§ 232.13 Road train and intermediate terminal train air brake tests.

* * * * *

(d) * * *

(2)(i) At a terminal where a solid block of cars, which has been previously charged and tested as prescribed by § 232.12 (c) through (j),

is added to a train, it must be determined that the brakes on the rear car of the train apply and release. As an alternative to the rear car application and release test, it shall be determined that brake pipe pressure of the train is being reduced as indicated by a rear car gauge or device and then that brake pipe pressure of the train is being restored as indicated by a rear car gauge or device.

* * * * *

§ 232.17 Freight and passenger train car brakes.

(a) * * *

(2) * * *

(iii) When a car equipped for use in passenger train service not due for periodical air brake repairs, as indicated by stenciled or recorded cleaning dates, is on shop or repair tracks, brake equipment must be tested by use of single car testing device as prescribed by the applicable AAR Code of Tests or by the American Public Transportation Association (APTA) standard referenced in § 238.311(a) of this chapter. Piston travel of brake cylinders must be adjusted if required, to the standard travel for that type of brake cylinder. After piston travel has been adjusted and with brakes released, sufficient brake shoe clearance must be provided.

* * * * *

(b) * * *

(3) Copies of the materials referred to in this section may be obtained from the Federal Railroad Administration, Office of Safety, RRS–14, 1120 Vermont Avenue, NW., Stop 25, Washington DC 20590.

[69 FR 29666, May 25, 2004, as amended at 67 FR 17584, Apr. 10, 2002]

PART 233—SIGNAL SYSTEMS REPORTING REQUIREMENTS

Sec.
233.1 Scope.
233.3 Application.
233.5 Accidents resulting from signal failure.
233.7 Signal failure reports.
233.9 Reports.
233.11 Civil penalties.
233.13 Criminal penalty.

APPENDIX A TO PART 233—SCHEDULE OF CIVIL PENALTIES

AUTHORITY: 49 U.S.C. 20103, 20107; 28 U.S.C. 2461, note; and 49 CFR 1.49.

SOURCE: 49 FR 3379, Jan. 26, 1984, unless otherwise noted.

§ 233.1 Scope.

This part prescribed reporting requirements with respect to methods of train operation, block signal systems, interlockings, traffic control systems, automatic train stop, train control, and cab signal systems, or other similar appliances, methods, and systems.

§ 233.3 Application.

(a) Except as provided in paragraph (b) of this section, this part applies to railroads that operate on standard gage track which is part of the general railroad system of transportation.

(b) This part does not apply to rail rapid transit operations conducted over track that is used exclusively for that purpose and that is not part of the general system of railroad transportation.

§ 233.5 Accidents resulting from signal failure.

Each carrier shall report within 24 hours to the Federal Railroad Administration by toll free telephone, number 800–424–0201, whenever it learns of the occurrence of an accident/incident arising from the failure of an appliance, device, method or system to function or indicate as required by part 236 of this title that results in a more favorable aspect than intended or other condition hazardous to the movement of a train.

EFFECTIVE DATE NOTE: At 49 FR 3379, Jan. 26, 1984, part 233 was revised. This section contains information collection and recordkeeping requirements and will not become effective until approval has been given by the Office of Management and Budget.

§ 233.7 Signal failure reports.

Each carrier shall report within 15 days each failure of an appliance, device, method, or system to function or indicate as required by part 236 of this title that results in a more favorable aspect than intended or other condition hazardous to the movement of a train. Form FRA F6180–14, ''Signal Failure Report,'' shall be used for this purpose and completed in accordance with instructions printed on the form.

(Approved by the Office of Management and Budget under control number 2130–0007)

§ 233.9 Reports.

Not later than April 1, 1997 and every 5 years thereafter, each carrier shall file with FRA a signal system status report ''Signal System Five-year Report'' on a form to be provided by FRA in accordance with instructions and definitions provided on the report.

[61 FR 33872, July 1, 1996]

§ 233.11 Civil penalties.

Any person (an entity of any type covered under 1 U.S.C. 1, including but not limited to the following: a railroad; a manager, supervisor, official, or other employee or agent of a railroad; any owner, manufacturer, lessor, or lessee of railroad equipment, track, or facilities; any independent contractor providing goods or services to a railroad; and any employee of such owner, manufacturer, lessor, lessee, or independent contractor) who violates any requirement of this part or causes the violation of any such requirement is subject to a civil penalty of at least $550 and not more than $16,000 per violation, except that: Penalties may be assessed against individuals only for willful violations, and, where a grossly negligent violation or a pattern of repeated violations has created an imminent hazard of death or injury to persons, or has caused death or injury, a penalty not to exceed $27,000 per violation may be assessed. Each day a violation continues shall constitute a separate offense. See appendix A to this part for a statement of agency civil penalty policy.

[63 FR 11623, Mar. 10, 1998, as amended at 69 FR 30595, May 28, 2004; 72 FR 51197, Sept. 6, 2007]

§ 233.13 Criminal penalty.

Whoever knowingly and willfully—

(a) Makes, causes to be made, or participates in the making of a false entry in reports required to be filed by this part; or

(b) Files a false report or other document required to be filed by this part is subject to a $5,000 fine and 2 years imprisonment as prescribed by 49 U.S.C. 522(a) and section 209(e) of the Federal Railroad Safety Act of 1970, as amended (45 U.S.C. 438(e)).

APPENDIX A TO PART 233—SCHEDULE OF CIVIL PENALTIES [1]

Section	Violation	Willful violation
233.5 Accidents resulting from signal failure	$2,500	$5,000
233.7 Signal failure reports	5,000	7,500
233.9 Annual reports	1,000	2,000

[53 FR 52936, Dec. 29, 1988, as amended at 63 FR 11623, Mar. 10, 1998; 69 FR 30595, May 28, 2004]

PART 234—GRADE CROSSING SIGNAL SYSTEM SAFETY

Subpart A—General

Sec.
234.1 Scope.
234.3 Application.
234.4 Preemptive effect.
234.5 Definitions.
234.6 Penalties.

Subpart B—Reports

234.7 Accidents involving grade crossing signal failure.
234.9 Grade crossing signal system failure reports.

Subpart C—Response to Reports of Warning System Malfunction

234.101 Employee notification rules.
234.103 Timely response to report of malfunction.
234.105 Activation failure.
234.106 Partial activation.

[1] A penalty may be assessed against an individual only for a willful violation. The Administrator reserves the right to assess a penalty of up to $27,000 for any violation where circumstances warrant. See 49 CFR part 209, appendix A.

234.107 False activation.
234.109 Recordkeeping.

Subpart D—Maintenance, Inspection, and Testing

MAINTENANCE STANDARDS

234.201 Location of plans.
234.203 Control circuits.
234.205 Operating characteristics of warning system apparatus.
234.207 Adjustment, repair, or replacement of component.
234.209 Interference with normal functioning of system.
234.211 Security of warning system apparatus.
234.213 Grounds.
234.215 Standby power system.
234.217 Flashing light units.
234.219 Gate arm lights and light cable.
234.221 Lamp voltage.
234.223 Gate arm.
234.225 Activation of warning system.
234.227 Train detection apparatus.
234.229 Shunting sensitivity.
234.231 Fouling wires.
234.233 Rail joints.
234.235 Insulated rail joints.
234.237 Reverse switch cut-out circuit.
234.239 Tagging of wires and interference of wires or tags with signal apparatus.
234.241 Protection of insulated wire; splice in underground wire.
234.243 Wire on pole line and aerial cable.
234.245 Signs.

INSPECTIONS AND TESTS

234.247 Purpose of inspections and tests; removal from service of relay or device failing to meet test requirements.
234.249 Ground tests.
234.251 Standby power.
234.253 Flashing light units and lamp voltage.
234.255 Gate arm and gate mechanism.
234.257 Warning system operation.
234.259 Warning time.
234.261 Highway traffic signal pre-emption.
234.263 Relays.
234.265 Timing relays and timing devices.
234.267 Insulation resistance tests, wires in trunking and cables.
234.269 Cut-out circuits.
234.271 Insulated rail joints, bond wires, and track connections.
234.273 Results of inspections and tests.

REQUIREMENTS FOR PROCESSOR-BASED SYSTEMS

234.275 Processor-based systems.

APPENDIX A TO PART 234—SCHEDULE OF CIVIL PENALTIES

APPENDIX B TO PART 234—ALTERNATE METHODS OF PROTECTION UNDER 49 CFR 234.105(C), 234.106, AND 234.107(C).

AUTHORITY: 49 U.S.C. 20103, 20107; 28 U.S.C. 2461, note; and 49 CFR 1.49.

SOURCE: 61 FR 31806, June 20, 1996, unless otherwise noted.

Subpart A—General

§ 234.1 Scope.

This part imposes minimum maintenance, inspection, and testing standards for highway-rail grade crossing warning systems. This part also prescribes standards for the reporting of failures of such systems and prescribes minimum actions railroads must take when such warning systems malfunction. This part does not restrict a railroad from adopting and enforcing additional or more stringent requirements not inconsistent with this part.

§ 234.3 Application.

This part applies to all railroads except:

(a) A railroad that exclusively operates freight trains only on track which is not part of the general railroad system of transportation;

(b) Rapid transit operations within an urban area that are not connected to the general railroad system of transportation; and

(c) A railroad that operates passenger trains only on track inside an installation that is insular; i.e., its operations are limited to a separate enclave in such a way that there is no reasonable expectation that the safety of the public—except a business guest, a licensee of the railroad or an affiliated entity, or a trespasser—would be affected by the operation. An operation will not be considered insular if one or more of the following exists on its line:

(1) A public highway-rail crossing that is in use;

(2) An at-grade rail crossing that is in use;

(3) A bridge over a public road or waters used for commercial navigation; or

(4) A common corridor with a railroad, i.e., its operations are within 30 feet of those of any railroad.

§ 234.4 Preemptive effect.

Under 49 U.S.C. 20106 (formerly § 205 of the Federal Railroad Safety Act of 1970 (45 U.S.C. 434)), issuance of these regulations preempts any State law,

rule, regulation, order, or standard covering the same subject matter, except a provision directed at an essentially local safety hazard that is consistent with this part and that does not impose an undue burden on interstate commerce.

§ 234.5 Definitions.

As used in this part:

Activation failure means the failure of an active highway-rail grade crossing warning system to indicate the approach of a train at least 20 seconds prior to the train's arrival at the crossing, or to indicate the presence of a train occupying the crossing, unless the crossing is provided with an alternative means of active warning to highway users of approaching trains. (This failure indicates to the motorist that it is safe to proceed across the railroad tracks when, in fact, it is not safe to do so.) A grade crossing signal system does not indicate the approach of a train within the meaning of this paragraph if—more than 50% of the flashing lights (not gate arm lights) on any approach lane to the crossing are not functioning as intended, or in the case of an approach lane for which two or more pairs of flashing lights are provided, there is not at least one flashing light pair operating as intended. Back lights on the far side of the crossing are not considered in making these determinations.

Appropriately equipped flagger means a person other than a train crewmember who is equipped with a vest, shirt, or jacket of a color appropriate for daytime flagging such as orange, yellow, strong yellow green or fluorescent versions of these colors or other generally accepted high visibility colors. For nighttime flagging, similar outside garments shall be retro reflective. Acceptable hand signal devices for daytime flagging include '' STOP/SLOW'' paddles or red flags. For nighttime flagging, a flashlight, lantern, or other lighted signal shall be used. Inasmuch as Part VI of the Federal Highway Administration's Manual on Uniform Traffic Control Devices addresses standards and guides for flaggers and flagging equipment for highway traffic control, FRA recommends that railroads be aware of the standards and follow them to the greatest extent possible. Copies of the latest MUTCD provisions regarding flagging will be available from FRA, as well as FMCSA, as changes are made in this area.

Credible report of system malfunction means specific information regarding a malfunction at an identified highway-rail crossing, supplied by a railroad employee, law enforcement officer, highway traffic official, or other employee of a public agency acting in an official capacity.

False activation means the activation of a highway-rail grade crossing warning system caused by a condition that requires correction or repair of the grade crossing warning system. (This failure indicates to the motorist that it is not safe to cross the railroad tracks when, in fact, it is safe to do so.)

Highway-rail grade crossing means a location where a public highway, road, street, or private roadway, including associated sidewalks and pathways, crosses one or more railroad tracks at grade.

Partial activation means activation of a highway-rail grade crossing warning system indicating the approach of a train, however, the full intended warning is not provided due to one of the following conditions:

(1) At non-gated crossings equipped with one pair of lights designed to flash alternately, one of the two lights does not operate properly (and approaching motorists can not clearly see flashing back lights from the warning lights on the other side of the crossing);

(2) At gated crossings, the gate arm is not in a horizontal position; or

(3) At gated crossings, any portion of a gate arm is missing if that portion normally had a gate arm flashing light attached.

Train means one or more locomotives, with or without cars.

Warning system malfunction means an activation failure, a partial activation, or a false activation of a highway-rail grade crossing warning system.

§ 234.6 Penalties.

(a) *Civil penalty*. Any person (an entity of any type covered under 1 U.S.C. 1, including but not limited to the following: a railroad; a manager, supervisor, official, or other employee or

agent of a railroad; any owner, manufacturer, lessor, or lessee of railroad equipment, track, or facilities; any independent contractor providing goods or services to a railroad; and any employee of such owner, manufacturer, lessor, lessee, or independent contractor) who violates any requirement of this part or causes the violation of any such requirement is subject to a civil penalty of at least $550, but not more than $16,000 per violation, except that: penalties may be assessed against individuals only for willful violations, and where a grossly negligent violation or a pattern of repeated violations has created an imminent hazard of death or injury to persons, or has caused death or injury, a penalty not to exceed $27,000 per violation may be assessed. Each day a violation continues shall constitute a separate offense. Appendix A to this part contains a schedule of civil penalty amounts used in connection with this rule. The railroad is not responsible for compliance with respect to any condition inconsistent with the technical standards set forth in this part where such variance arises as a result of actions beyond the control of the railroad and the railroad could not have prevented the variance through the exercise of due diligence. The foregoing sentence does not excuse any instance of noncompliance resulting from the actions of the railroad's employees, agents, or contractors.

(b) *Criminal penalty*. Whoever knowingly and willfully makes, causes to be made, or participates in the making of a false entry in reports required to be filed by this part, or files a false report or other document required to be filed by this part is subject to a $5,000 fine and 2 years imprisonment as prescribed by 49 U.S.C. 522(a) and section 209(e) of the Federal Railroad Safety Act of 1970, as amended (45 U.S.C. 438(e)).

[61 FR 31806, June 20, 1996, as amended at 63 FR 11623, Mar. 10, 1998; 69 FR 30595, May 28, 2004; 72 FR 51197, Sept. 6, 2007]

Subpart B—Reports

§ 234.7 Accidents involving grade crossing signal failure.

(a) Each railroad shall report to FRA every impact between on-track railroad equipment and an automobile, bus, truck, motorcycle, bicycle, farm vehicle, or pedestrian at a highway-rail grade crossing involving an activation failure. Notification shall be provided to the National Response Center within 24 hours of occurrence at (800) 424–0201. Complete reports shall thereafter be filed with FRA pursuant to § 234.9 of this part (activation failure report) and 49 CFR 225.11 (accident/ incident report).

(b) Each telephone report must state the:

(1) Name of the railroad;

(2) Name, title, and telephone number of the individual making the report;

(3) Time, date, and location of accident;

(4) U. S. DOT-AAR Grade Crossing Identification Number;

(5) Circumstances of the accident, including operating details of the grade crossing warning device;

(6) Number of persons killed or injured, if any;

(7) Maximum authorized train speed; and

(8) Posted highway speed limit, if known.

§ 234.9 Grade crossing signal system failure reports.

Each railroad shall report to FRA within 15 days each activation failure of a highway-rail grade crossing warning system. FRA Form No. 6180–83, ''Highway-Rail Grade Crossing Warning System Failure Report,'' shall be used for this purpose and completed in accordance with instructions printed on the form.

Subpart C—Response to Reports of Warning System Malfunction

§ 234.101 Employee notification rules.

Each railroad shall issue rules requiring its employees to report to persons designated by that railroad, by the quickest means available, any warning system malfunction.

§ 234.103 Timely response to report of malfunction.

(a) Upon receipt of a credible report of a warning system malfunction, a railroad having maintenance responsibility for the warning system shall

promptly investigate the report and determine the nature of the malfunction. The railroad shall take appropriate action as required by § 234.207.

(b) Until repair or correction of the warning system is completed, the railroad shall provide alternative means of warning highway traffic and railroad employees in accordance with §§ 234.105, 234.106 or 234.107 of this part.

(c) Nothing in this subpart requires repair of a warning system, if, acting in accordance with applicable State law, the railroad proceeds to discontinue or dismantle the warning system. However, until repair, correction, discontinuance, or dismantling of the warning system is completed, the railroad shall comply with this subpart to ensure the safety of the traveling public and railroad employees.

§ 234.105 Activation failure.

Upon receipt of a credible report of warning system malfunction involving an activation failure, a railroad having maintenance responsibility for the warning system shall promptly initiate efforts to warn highway users and railroad employees at the subject crossing by taking the following actions:

(a) Prior to any train's arrival at the crossing, notify the train crew of the report of activation failure and notify any other railroads operating over the crossing;

(b) Notify the law enforcement agency having jurisdiction over the crossing, or railroad police capable of responding and controlling vehicular traffic; and

(c) Provide for alternative means of actively warning highway users of approaching trains, consistent with the following requirements (see appendix B for a summary chart of alternative means of warning):

(1)(i) If an appropriately equipped flagger provides warning for each direction of highway traffic, trains may proceed through the crossing at normal speed.

(ii) If at least one uniformed law enforcement officer (including a railroad police officer) provides warning to highway traffic at the crossing, trains may proceed through the crossing at normal speed.

(2) If an appropriately equipped flagger provides warning for highway traffic, but there is not at least one flagger providing warning for each direction of highway traffic, trains may proceed with caution through the crossing at a speed not exceeding 15 miles per hour. Normal speed may be resumed after the locomotive has passed through the crossing.

(3) If there is not an appropriately equipped flagger or uniformed law enforcement officer providing warning to highway traffic at the crossing, each train must stop before entering the crossing and permit a crewmember to dismount to flag highway traffic to a stop. The locomotive may then proceed through the crossing, and the flagging crewmember may reboard the locomotive before the remainder of the train proceeds through the crossing.

(d) A locomotive's audible warning device shall be activated in accordance with railroad rules regarding the approach to a grade crossing.

§ 234.106 Partial activation.

Upon receipt of a credible report of a partial activation, a railroad having maintenance responsibility for the warning system shall promptly initiate efforts to warn highway users and railroad employees at the subject crossing in the same manner as required for false activations (§ 234.107).

§ 234.107 False activation.

Upon receipt of a credible report of a false activation, a railroad having maintenance responsibility for the highway-rail grade crossing warning system shall promptly initiate efforts to warn highway users and railroad employees at the crossing by taking the following actions:

(a) Prior to a train's arrival at the crossing, notify the train crew of the report of false activation and notify any other railroads operating over the crossing;

(b) Notify the law enforcement agency having jurisdiction over the crossing, or railroad police capable of responding and controlling vehicular traffic; and

(c) Provide for alternative means of actively warning highway users of approaching trains, consistent with the

following requirements (see Appendix B for a summary chart of alternative means of warning).

(1)(i) If an appropriately equipped flagger is providing warning for each direction of highway traffic, trains may proceed through the crossing at normal speed.

(ii) If at least one uniformed law enforcement officer (including a railroad police officer) provides warning to highway traffic at the crossing, trains may proceed through the crossing at normal speed.

(2) If there is not an appropriately equipped flagger providing warning for each direction of highway traffic, or if there is not at least one uniformed law enforcement officer providing warning, trains with the locomotive or cab car leading, may proceed with caution through the crossing at a speed not exceeding 15 miles per hour. Normal speed may be resumed after the locomotive has passed through the crossing. In the case of a shoving move, a crewmember shall be on the ground to flag the train through the crossing.

(3) In lieu of complying with paragraphs (c) (1) or (2) of this section, a railroad may temporarily take the warning system out of service if the railroad complies with all requirements of § 234.105, ''Activation failure.''

(d) A locomotive's audible warning device shall be activated in accordance with railroad rules regarding the approach to a grade crossing.

§ 234.109 Recordkeeping.

(a) Each railroad shall keep records pertaining to compliance with this subpart. Records may be kept on forms provided by the railroad or by electronic means. Each railroad shall keep the following information for each credible report of warning system malfunction:

(1) Location of crossing (by highway name and DOT/AAR Crossing Inventory Number);

(2) Time and date of receipt by railroad of report of malfunction;

(3) Actions taken by railroad prior to repair and reactivation of repaired system; and

(4) Time and date of repair.

(b) Each railroad shall retain for at least one year (from the latest date of railroad activity in response to a credible report of malfunction) all records referred to in paragraph (a) of this section. Records required to be kept shall be made available to FRA as provided by 49 U.S.C. 20107 (formerly 208 of the Federal Railroad Safety Act of 1970 (45 U.S.C. 437)).

Subpart D—Maintenance, Inspection, and Testing

MAINTENANCE STANDARDS

§ 234.201 Location of plans.

Plans required for proper maintenance and testing shall be kept at each highway-rail grade crossing warning system location. Plans shall be legible and correct.

§ 234.203 Control circuits.

All control circuits that affect the safe operation of a highway-rail grade crossing warning system shall operate on the fail-safe principle.

§ 234.205 Operating characteristics of warning system apparatus.

Operating characteristics of electromagnetic, electronic, or electrical apparatus of each highway-rail crossing warning system shall be maintained in accordance with the limits within which the system is designed to operate.

§ 234.207 Adjustment, repair, or replacement of component.

(a) When any essential component of a highway-rail grade crossing warning system fails to perform its intended function, the cause shall be determined and the faulty component adjusted, repaired, or replaced without undue delay.

(b) Until repair of an essential component is completed, a railroad shall take appropriate action under § 234.105, Activation failure, § 234.106, Partial activation, or § 234.107, False activation, of this part.

§ 234.209 Interference with normal functioning of system.

(a) The normal functioning of any system shall not be interfered with in testing or otherwise without first taking measures to provide for safety of

highway traffic that depends on normal functioning of such system.

(b) Interference includes, but is not limited to:

(1) Trains, locomotives or other railroad equipment standing within the system's approach circuit, other than normal train movements or switching operations, where the warning system is not designed to accommodate those activities.

(2) Not providing alternative methods of maintaining safety for the highway user while testing or performing work on the warning systems or on track and other railroad systems or structures which may affect the integrity of the warning system.

§ 234.211 Security of warning system apparatus.

Highway-rail grade crossing warning system apparatus shall be secured against unauthorized entry.

§ 234.213 Grounds.

Each circuit that affects the proper functioning of a highway-rail grade crossing warning system shall be kept free of any ground or combination of grounds that will permit a current flow of 75 percent or more of the release value of any relay or electromagnetic device in the circuit. This requirement does not apply to: circuits that include track rail; alternating current power distribution circuits that are grounded in the interest of safety; and common return wires of grounded common return single break circuits.

§ 234.215 Standby power system.

A standby source of power shall be provided with sufficient capacity to operate the warning system for a reasonable length of time during a period of primary power interruption. The designated capacity shall be specified on the plans required by § 234.201 of this part.

[66 FR 49560, Sept. 28, 2001]

§ 234.217 Flashing light units.

(a) Each flashing light unit shall be properly positioned and aligned and shall be visible to a highway user approaching the crossing.

(b) Each flashing light unit shall be maintained to prevent dust and moisture from entering the interior of the unit. Roundels and reflectors shall be clean and in good condition.

(c) All light units shall flash alternately. The number of flashes per minute for each light unit shall be 35 minimum and 65 maximum.

§ 234.219 Gate arm lights and light cable.

Each gate arm light shall be maintained in such condition to be properly visible to approaching highway users. Lights and light wire shall be secured to the gate arm.

§ 234.221 Lamp voltage.

The voltage at each lamp shall be maintained at not less than 85 percent of the prescribed rating for the lamp.

§ 234.223 Gate arm.

Each gate arm, when in the downward position, shall extend across each lane of approaching highway traffic and shall be maintained in a condition sufficient to be clearly viewed by approaching highway users. Each gate arm shall start its downward motion not less than three seconds after flashing lights begin to operate and shall assume the horizontal position at least five seconds before the arrival of any normal train movement through the crossing. At those crossings equipped with four quadrant gates, the timing requirements of this section apply to entrance gates only.

§ 234.225 Activation of warning system.

A highway-rail grade crossing warning system shall be maintained to activate in accordance with the design of the warning system, but in no event shall it provide less than 20 seconds warning time for the normal operation of through trains before the grade crossing is occupied by rail traffic.

§ 234.227 Train detection apparatus.

(a) Train detection apparatus shall be maintained to detect a train or railcar in any part of a train detection circuit, in accordance with the design of the warning system.

(b) If the presence of sand, rust, dirt, grease, or other foreign matter is known to prevent effective shunting, a railroad shall take appropriate action under § 234.105, ''Activation failure,'' to safeguard highway users.

§ 234.229 Shunting sensitivity.

Each highway-rail grade crossing train detection circuit shall detect the application of a shunt of 0.06 ohm resistance when the shunt is connected across the track rails of any part of the circuit.

§ 234.231 Fouling wires.

Each set of fouling wires in a highway-rail grade crossing train detection circuit shall consist of at least two discrete conductors. Each conductor shall be of sufficient conductivity and shall be maintained in such condition to ensure proper operation of the train detection apparatus when the train detection circuit is shunted. Installation of a single duplex wire with single plug acting as fouling wires is prohibited. Existing installations having single duplex wires with a single plug for fouling wires may be continued in use until they require repair or replacement.

§ 234.233 Rail joints.

Each non-insulated rail joint located within the limits of a highway-rail grade crossing train detection circuit shall be bonded by means other than joint bars and the bonds shall be maintained in such condition to ensure electrical conductivity.

§ 234.235 Insulated rail joints.

Each insulated rail joint used to separate train detection circuits of a highway-rail grade crossing shall be maintained to prevent current from flowing between rails separated by the insulation in an amount sufficient to cause a failure of the train detection circuit.

§ 234.237 Reverse switch cut-out circuit.

A switch, when equipped with a switch circuit controller connected to the point and interconnected with warning system circuitry, shall be maintained so that the warning system can only be cut out when the switch point is within one-half inch of full reverse position.

§ 234.239 Tagging of wires and interference of wires or tags with signal apparatus.

Each wire shall be tagged or otherwise so marked that it can be identified at each terminal. Tags and other marks of identification shall be made of insulating material and so arranged that tags and wires do not interfere with moving parts of the apparatus. This requirement applies to each wire at each terminal in all housings including switch circuit controllers and terminal or junction boxes. This requirement does not apply to flashing light units, gate arm light units and other auxiliary light units. The local wiring on a solid state crossing controller rack does not require tags if the wiring is an integral part of the solid state equipment.

§ 234.241 Protection of insulated wire; splice in underground wire.

Insulated wire shall be protected from mechanical injury. The insulation shall not be punctured for test purposes. A splice in underground wire shall have insulation resistance at least equal to that of the wire spliced.

§ 234.243 Wire on pole line and aerial cable.

Wire on a pole line shall be securely attached to an insulator that is properly fastened to a cross arm or bracket supported by a pole or other support. Wire shall not interfere with, or be interfered with by, other wires on the pole line. Aerial cable shall be supported by messenger wire. An open-wire transmission line operating at voltage of 750 volts or more shall be placed not less than 4 feet above the nearest cross arm carrying active warning system circuits.

§ 234.245 Signs.

Each sign mounted on a highway-rail grade crossing signal post shall be maintained in good condition and be visible to the highway user.

INSPECTIONS AND TESTS

§ 234.247 Purpose of inspections and tests; removal from service of relay or device failing to meet test requirements.

(a) The inspections and tests set forth in §§ 234.249 through 234.271 are required at highway-rail grade crossings located on in service railroad tracks and shall be made to determine if the warning system and its component parts are maintained in a condition to perform their intended function.

(b) If a railroad elects not to comply with the requirements of §§ 234.249 through 234.271 because all tracks over the grade crossing are out of service or the railroad suspends operations during a portion of the year, and the grade crossing warning system is also temporarily taken out of service, a full inspection and all required tests must be successfully completed before railroad operations over the grade crossing resume.

(c) Any electronic device, relay, or other electromagnetic device that fails to meet the requirements of tests required by this part shall be removed from service and shall not be restored to service until its operating characteristics are in accordance with the limits within which such device or relay is designed to operate.

[61 FR 31806, June 20, 1996, as amended at 66 FR 49560, Sept. 28, 2001]

§ 234.249 Ground tests.

A test for grounds on each energy bus furnishing power to circuits that affect the safety of warning system operation shall be made when such energy bus is placed in service and at least once each month thereafter.

§ 234.251 Standby power.

Standby power shall be tested at least once each month.

§ 234.253 Flashing light units and lamp voltage.

(a) Each flashing light unit shall be inspected when installed and at least once every twelve months for proper alignment and frequency of flashes in accordance with installation specifications.

(b) Lamp voltage shall be tested when installed and at least once every 12 months thereafter.

(c) Each flashing light unit shall be inspected for proper visibility, dirt and damage to roundels and reflectors at least once each month.

§ 234.255 Gate arm and gate mechanism.

(a) Each gate arm and gate mechanism shall be inspected at least once each month.

(b) Gate arm movement shall be observed for proper operation at least once each month.

(c) Hold-clear devices shall be tested for proper operation at least once every 12 months.

§ 234.257 Warning system operation.

(a) Each highway-rail crossing warning system shall be tested to determine that it functions as intended when it is placed in service. Thereafter, it shall be tested at least once each month and whenever modified or disarranged.

(b) Warning bells or other stationary audible warning devices shall be tested when installed to determine that they function as intended. Thereafter, they shall be tested at least once each month and whenever modified or disarranged.

§ 234.259 Warning time.

Each crossing warning system shall be tested for the prescribed warning time at least once every 12 months and when the warning system is modified because of a change in train speeds. Electronic devices that accurately determine actual warning time may be used in performing such tests.

§ 234.261 Highway traffic signal preemption.

Highway traffic signal pre-emption interconnections, for which a railroad has maintenance responsibility, shall be tested at least once each month.

§ 234.263 Relays.

(a) Except as stated in paragraph (b) of this section, each relay that affects the proper functioning of a crossing warning system shall be tested at least once every four years.

(b)(1) Alternating current vane type relays, direct current polar type relays, and relays with soft iron magnetic structure shall be tested at least once every two years.

(2) Alternating current centrifugal type relays shall be tested at least once every 12 months.

(c) Testing of relays requiring testing on four year intervals shall be completed in accordance with the following schedule:

(1) Not less than 50% by the end of calendar year 1996;

(2) Not less than a total of 75% by the end of calendar year 1997; and

(3) One hundred percent by the end of calendar year 1998.

(d) Testing of relays requiring testing on two year intervals shall be completed by the end of calendar year 1996.

§ 234.265 Timing relays and timing devices.

Each timing relay and timing device shall be tested at least once every twelve months. The timing shall be maintained at not less than 90 percent nor more than 110 percent of the 41 predetermined time interval. The predetermined time interval shall be shown on the plans or marked on the timing relay or timing device. Timing devices which perform internal functions associated with motion detectors, motion sensors, and grade crossing predictors are not subject to the requirements of this section.

§ 234.267 Insulation resistance tests, wires in trunking and cables.

(a) Insulation resistance tests shall be made when wires or cables are installed and at least once every ten years thereafter.

(b) Insulation resistance tests shall be made between all conductors and ground, between conductors in each multiple conductor cable, and between conductors in trunking. Insulation resistance tests shall be performed when wires, cables, and insulation are dry.

(c) Subject to paragraph (d) of this section, when insulation resistance of wire or cable is found to be less than 500,000 ohms, prompt action shall be taken to repair or replace the defective wire or cable. Until such defective wire or cable is replaced, insulation resistance tests shall be made annually.

(d) A circuit with a conductor having an insulation resistance of less than 200,000 ohms shall not be used.

(e) Required insulation resistance testing that does not conform to the required testing schedule of this section shall be completed in accordance with the following schedule:

(1) Not less than 50% by the end of calendar year 1996;

(2) Not less than a total of 75% by the end of calendar year 1997; and

(3) One hundred percent by the end of calendar year 1998.

§ 234.269 Cut-out circuits.

Each cut-out circuit shall be tested at least once every three months to determine that the circuit functions as intended. For purposes of this section, a cut-out circuit is any circuit which overrides the operation of automatic warning systems. This includes both switch cut-out circuits and devices which enable personnel to manually override the operation of automatic warning systems.

§ 234.271 Insulated rail joints, bond wires, and track connections.

Insulated rail joints, bond wires, and track connections shall be inspected at least once every three months.

§ 234.273 Results of inspections and tests.

(a) Results of inspections and tests made in compliance with this part shall be recorded on forms provided by the railroad, or by electronic means, subject to approval by the Associate Administrator for Safety. Each record shall show the name of the railroad, AAR/DOT inventory number, place and date, equipment tested, results of tests, repairs, replacements, adjustments made, and condition in which the apparatus was left.

(b) Each record shall be signed or electronically coded by the employee making the test and shall be filed in the office of a supervisory official having jurisdiction. Records required to be kept shall be made available to FRA as provided by 49 U.S.C. 20107 (formerly § 208 of the Federal Railroad Safety Act of 1970 (45 U.S.C. 437)).

(c) Each record shall be retained until the next record for that test is filed but in no case for less than one year from the date of the test.

REQUIREMENTS FOR PROCESSOR-BASED SYSTEMS

§ 234.275 Processor-based systems.

(a) *Applicable definitions.* The definitions in § 236.903 of this chapter shall apply to this section, where applicable.

(b) *Use of performance standard authorized or required.*

(1) In lieu of compliance with the requirements of this subpart, a railroad may elect to qualify an existing processor-based product under part 236, subpart H of this chapter.

(2) Highway-rail grade crossing warning systems, subsystems, or components that are processor-based and that are first placed in service after June 6, 2005, which contain new or novel technology, or which provide safety-critical data to a railroad signal or train control system that is governed by part 236, subpart H of this chapter, shall also comply with those requirements. New or novel technology refers to a technology not previously recognized for use as of March 7, 2005.

(3) Products designed in accordance with subparts A through D of this part, which are not in service but are in the developmental stage prior to December 5, 2005 (or for which a request for exclusion was submitted prior to June 6, 2005 pursuant to § 236.911 of this chapter), may be excluded from the requirements of part 236, subpart H of this chapter upon notification to FRA by March 6, 2006, if placed in service by December 5, 2008 (or March 7, 2008 for those products for which a request for exclusion was submitted to FRA prior to June 6, 2005). Railroads may continue to implement and use these products and components from these existing products. A railroad may at any time elect to have products that are excluded made subject to 49 CFR part 236, subpart H, by submitting a Product Safety Plan as prescribed in § 236.913 of this chapter and otherwise complying with part 236, subpart H of this chapter.

(c) *Product safety plan justifications.* The Product Safety Plan (see § 236.903 of this chapter) must explain how the performance objective sought to be addressed by each of the particular requirements of this subpart is met by the product, why the objective is not relevant to the product's design, or how safety requirements are satisfied using alternative means. Deviation from those particular requirements is authorized if an adequate explanation is provided, making reference to relevant elements of the Product Safety Plan, and if the product satisfies the performance standard set forth in § 236.909 of this chapter. (See § 236.907(a)(14) of this chapter.)

(d) *Specific requirements.* The following exclusions from the latitude provided by this section apply:

(1) Nothing in this section authorizes deviation from applicable design requirements for automated warning devices at highway-rail grade crossings in the Manual on Uniform Traffic Control Devices (MUTCD), 2000 Millennium Edition, Federal Highway Administration (FHWA), dated December 18, 2000, including Errata #1 to MUTCD 2000 Millennium Edition dated June 14, 2001 (*http://mutcd.fhwa.dot.gov/*).

(2) Nothing in this section authorizes deviation from the following requirements of this subpart:

(i) § 234.207(b) (Adjustment, repair, or replacement of a component);

(ii) § 234.209(b) (Interference with normal functioning of system);

(iii) § 234.211 (Security of warning system apparatus);

(iv) § 234.217 (Flashing light units);

(v) § 234.219 (Gate arm lights and light cable);

(vi) § 234.221 (Lamp voltage);

(vii) § 234.223 (Gate arm);

(viii) § 234.225 (Activation of warning system);

(ix) § 234.227 (Train detection apparatus)—if a train detection circuit is employed to determine the train's presence;

(x) § 234.229 (Shunting sensitivity)—if a conventional track circuit is employed;

(xi) § 234.231 (Fouling wires)—if a conventional train detection circuit is employed;

(xii) § 234.233 (Rail joints)—if a track circuit is employed;

(xiii) § 234.235 (Insulated rail joints)—if a track circuit is employed;

(xiv) § 234.237 (Reverse switch cut-out circuit); or

(xv) § 234.245 (Signs).

(e) *Separate justification for other than fail-safe design*. Deviation from the requirement of § 234.203 (Control circuits) that circuits be designed on a fail-safe principle must be separately justified at the component, subsystem, and system level using the criteria of § 236.909 of this chapter.

(f) *Software management control for certain systems not subject to a performance standard*. Any processor-based system, subsystem, or component subject to this part, which is not subject to the requirements of part 236, subpart H of this chapter but which provides safety-critical data to a signal or train control system shall be included in the software management control plan requirements as specified in § 236.18 of this chapter.

[70 FR 72384, Dec. 5, 2005]

APPENDIX A TO PART 234—SCHEDULE OF CIVIL PENALTIES [1]

Section	Violation	Willful violation
Subpart B—Reports		
234.7 Accidents involving grade crossing signal failure	$5,000	$7,500
234.9 Grade crossing signal system failure reports	2,500	5,000
Subpart C—Response to Reports of Warning System Malfunction		
Sec.		
234.101 Employee notification rules	2,500	5,000
234.103 Timely response to report of malfunction	2,500	5,000
234.105 Activation failure		
(a) Failure to notify—train crews	5,000	7,500
Other railroads	5,000	7,500
(b) Failure to notify law enforcement agency	2,500	5,000
(c) Failure to comply with—flagging requirements	5,000	5,000
Speed restrictions	5,000	7,500
(d) Failure to activate horn or whistle	5,000	7,500
234.106 Partial activation		
(a) Failure to notify—train crews	5,000	7,500
Other railroads	5,000	7,500
(b) Failure to notify law enforcement agency	2,500	5,000
(c) Failure to comply with—flagging requirements speed restrictions	5,000	7,500
(d) Failure to activate horn or whistle	5,000	7,500
234.107 False activation		
(a) Failure to notify—train crews	5,000	7,500
Other railroads	5,000	7,500
(b) Failure to notify law enforcement agency	2,500	5,000
(c) Failure to comply with—flagging requirements	5,000	7,500
Speed restrictions	5,000	7,500
(d) Failure to activate horn or whistle	5,000	7,500
234.109 Recordkeeping	1,000	2,000
Subpart D—Maintenance, Inspection, and Testing		
Maintenance Standards:		
234.201 Location of plans	1,000	2,000
234.203 Control circuits	1,000	2,000
234.205 Operating characteristics of warning system apparatus	2,500	5,000
234.207 Adjustment, repair, or replacement of component	2,500	5,000
234.209 Interference with normal functioning of system	5,000	7,500
234.211 Locking of warning system apparatus	1,000	2,000
234.213 Grounds	1,000	2,000
234.215 Standby power system	5,000	7,500
234.217 Flashing light units	1,000	2,000
234.219 Gate arm lights and light cable	1,000	2,000
234.221 Lamp voltage	1,000	2,000
234.223 Gate arm	1,000	2,000
234.225 Activation of warning system	5,000	7,500
234.227 Train detection apparatus	2,500	5,000
234.229 Shunting sensitivity	2,500	5,000
234.231 Fouling wires	1,000	2,000
234.233 Rail joints	1,000	2,000
234.235 Insulated rail joints	1,000	2,000
234.237 Switch equipped with circuit controller	1,000	2,000

Section	Violation	Willful violation
234.239 Tagging of wires and interference of wires or tags with signal apparatus	1,000	2,000
234.241 Protection of insulated wire; splice in underground wire	1,000	2,000
234.243 Wire on pole line and aerial cable	1,000	2,000
234.245 Signs	1,000	2,000
Inspections and Tests:		
234.247 Purpose of inspections and tests; removal from service of relay or device failing to meet test requirements	2,500	5,000
234.249 Ground tests	2,500	5,000
234.251 Standby power	5,000	7,500
234.253 Flashing light units and lamp voltage	1,000	2,000
234.255 Gate arm and gate mechanism	1,000	2,000
234.257 Warning system operation	2,500	5,000
234.259 Warning time	1,000	2,000
234.261 Highway traffic signal pre-emption	1,000	2,000
234.263 Relays	1,000	2,000
234.265 Timing relays and timing devices	1,000	2,000
234.267 Insulation resistance tests, wires in trunking and cables	2,500	5,000
234.269 Cut-out circuits	1,000	2,000
234.271 Insulated rail joints, bond wires, and track connections	2,500	5,000
234.273 Results of tests	1,000	2,000
234.275 Processor-Based Systems	$5,000	$7,500

[1] A penalty may be assessed against an individual only for a willful violation. The Administrator reserves the right to assess a penalty of up to $27,000 for any violation where circumstances warrant. See 49 CFR Part 209, Appendix A.

[61 FR 31806, June 20, 1996, as amended at 63 FR 11623, Mar. 10, 1998; 69 FR 30595, May 28, 2004; 70 FR 11094, Mar. 7, 2005]

APPENDIX B TO PART 234—ALTERNATE METHODS OF PROTECTION UNDER 49 CFR 234.105(c), 234.106, AND 234.107(c)

[This is a summary—see body of text for complete requirements]

	Flagger for each direction of traffic	Police officer present	Flagger present, but not one for each direction of traffic	No flagger/no police
False Activation	Normal Speed	Normal Speed	Proceed with caution—maximum speed of 15 mph.	Proceed with caution—maximum speed of 15 mph.
Partial Activation*	Normal Speed	Normal Speed	Proceed with caution—maximum speed of 15 mph.	Proceed with caution—maximum speed of 15 mph.
Activation Failure**	Normal Speed	Normal Speed	Proceed with caution—maximum speed of 15 mph.	Stop: Crewmember flag traffic and reboard.

*Partial activiation—full warning not given.

Non-gated crossing with one pair of lights designed to flash alternatively, one light does not work (and back-lights from other side not visible).

Gated crossing—gate arm not horizontal; or any portion of a gate arm is missing if that portion had held a gate arm flashing light.

**Activitation failure includes—if more than 50% of the flashing lights on any approach lane not functioning; or if an approach lane has two or more pairs of flashing lights, there is not at least one pair operating as intended.

PART 235—INSTRUCTIONS GOVERNING APPLICATIONS FOR APPROVAL OF A DISCONTINUANCE OR MATERIAL MODIFICATION OF A SIGNAL SYSTEM OR RELIEF FROM THE REQUIREMENTS OF PART 236

Sec.

235.1 Scope.
235.3 Application.
235.5 Changes requiring filing of application.
235.7 Changes not requiring filing of application.
235.8 Relief from the requirements of part 236 of this title.
235.9 Civil penalty.
235.10 Contents of application.
235.12 Additional required information-prints.
235.13 Filing procedure.
235.14 Notice.
235.20 Protests.
APPENDIX A TO PART 235—SCHEDULE OF CIVIL PENALTIES

AUTHORITY: 49 U.S.C. 20103, 20107; 28 U.S.C. 2461, note; and 49 CFR 1.49.

SOURCE: 49 FR 3380, Jan. 26, 1984, unless otherwise noted.

§ 235.1 Scope.

This part prescribes application for approval to discontinue or materially

modify block signal systems, interlockings, traffic control systems, automatic train stop, train control, or cab signal systems, or other similar appliances, devices, methods, or systems, and provides for relief from part 236 of this title.

§ 235.3 Application.

(a) Except as provided in paragraph (b) of this section, this part applies to railroads that operate on standard gage track which is part of the general railroad system of transportation.

(b) This part does not apply to rail rapid transit operations conducted over track that is used exclusively for that purpose and that is not part of the general system of railroad transportation.

§ 235.5 Changes requiring filing of application.

(a) Except as provided in § 235.7, applications shall be filed to cover the following:

(1) The discontinuance of a block signal system, interlocking, traffic control system, automatic train stop, train control, or cab signal system or other similar appliance or device;

(2) The decrease of the limits of a block signal system, interlocking, traffic control system, automatic train stop, train control, or cab signal system; or

(3) The modification of a block signal system, interlocking, traffic control system, automatic train stop, train control, or cab signal system.

(b) [Reserved]

(Approved by the Office of Management and Budget under control number 2130–0042)

§ 235.7 Changes not requiring filing of application.

(a) It is not necessary to file an application for approval of the following discontinuances:

(1) Removal of block signal system, interlocking, traffic control system, automatic train stop, train control, or cab signal system from track approved for abandonment by formal proceeding;

(2) Removal of devices and associated signals used to provide protection against unusual contingencies such as landslide, burned bridge, high water, high and wide load, or tunnel protection when the unusual contingency no longer exists;

(3) Removal of an interlocking where a drawbridge has been permanently closed by the formal approval of another government agency; or

(4) Removal from service not to exceed six months of block signal system, interlocking, or traffic control system necessitated by catastrophic occurrence such as derailment, flood, fire, or hurricane.

(b) When the resultant arrangement will comply with part 236 of this title, it is not necessary to file for approval to decrease the limits of a system as follows:

(1) Decrease of the limits of an interlocking when interlocked switches, derails, or movable-point frogs are not involved;

(2) Removal of electric or mechanical lock from hand-operated switch in automatic block signal or traffic control territory where train speed over switch does not excess 20 miles per hour; or

(3) Removal of electric or mechanical lock from hand-operated switch in automatic block signal or traffic control territory where trains are not permitted to clear the main track at such switch.

(c) When the resultant arrangement will comply with part 236 of this title, it is not necessary to file an application for approval of the following modifications:

(1) A modification that is required to comply with an order of the Federal Railroad Administration or any section of part 236 of this title;

(2) The installation of an automatic block signal or a traffic control system to replace manual block or non-signaled territory;

(3) The installation of a traffic control system to replace a roadway automatic block signal system (discontinuance of an automatic train stop, train control, or cab signal system is not permitted without FRA approval);

(4) The installation of an automatic train stop, train control, or cab signal system in an existing automatic block or traffic control system;

(5) The installation of a continuous inductive automatic train stop system

to replace an existing intermittent inductive automatic train stop system;

(6) The installation of a continuous inductive automatic train stop system to supplement an existing automatic cab signal system;

(7) The installation of an automatic train control system to replace an existing automatic train stop system or to supplement an existing automatic cab signal system;

(8) The installation of an interlocking to replace existing stop signs, gates, or pipe-connected derails protecting a railroad crossing at grade;

(9) The installation of all relay type locking to replace existing mechanical or electromechanical locking of an interlocking;

(10) The installation of an additional controlled point in existing traffic control system;

(11) The installation of an interlocking in an existing block signal system;

(12) The conversion of a hand-operated switch, a hand-operated switch locked either electrically or mechanically, or a spring switch to a power-operated switch;

(13) The conversion of a spring switch to a hand-operated switch, or to a hand-operated switch locked either electrically or mechanically;

(14) The removal or relocation of signals associated with a spring switch converted to hand operation;

(15) The installation, relocation, or removal of signals to specifically provide adequate stopping distance;

(16) The change of aspects;

(17) The relocation of a signal to improve preview of signal aspect visibility;

(18) To replace a signal with a signal of another type;

(19) To change an approach signal to operative or inoperative signal, or remove an approach signal not required by § 236.310 of this title;

(20) The change in location of a machine from which an interlocking or traffic control system is controlled;

(21) The closing of a manual block station or the change in hours during which a manual block station is attended;

(22) The change in hours during which a manual interlocking is attended provided the interlocking operates for all routes over which train movements are permitted;

(23) The installation of devices used to provide protection against unusual contingencies such as landslide, burned bridges, high water, high and wide loads, or dragging equipment;

(24) The installation, relocation, or removal of signals, interlocked switches, derails, movable-point frogs, or electric locks in an existing system directly associated with:

(i) The installation of new track;

(ii) The elimination of existing track other than a second main track;

(iii) The extension or shortening of a passing siding;

(iv) Elimination of second main track where signal system mn retained main track is arranged to provide both opposing and following protection for train movements provided second main track is physically removed; or

(v) A line relocation; or

(vi) The conversion of pole line circuits to electronic (coded) track circuits provided that the railroad gives notice and a profile plan of the change to the FRA regional office having jurisdiction over that territory at least 60 days in advance of the change. The railroad must also at the same time provide a copy of the notice and profile plan to representatives of employees responsible for maintenance, inspection and testing of the signal system under 49 CFR Part 236. The signal system modification will be deemed acceptable, unless within 60 days, the Regional Adminstrator stays action by written notice to the railroad and refers the issue to the Railroad Safety Board for decision.

(25) The temporary or permanent arrangement of existing systems necessitated by highway rail separation construction. Temporary arrangements shall be removed within six months following completion of construction.

[49 FR 3380, Jan. 26, 1984, as amended at 61 FR 33873, July 1, 1996]

§ 235.8 Relief from the requirements of part 236 of this title.

Relief from the requirements of the rules, standards and instructions contained in part 236 of this title will be granted upon an adequate showing by

an individual carrier. Relief heretofore granted to any carrier shall constitute relief to the same extent as relief granted under the requirements of this part.

(Approved by the Office of Management and Budget under control number 2130–0043)

§ 235.9 Civil penalty.

Any person (an entity of any type covered under 1 U.S.C. 1, including but not limited to the following: a railroad; a manager, supervisor, official, or other employee or agent of a railroad; any owner, manufacturer, lessor, or lessee of railroad equipment, track, or facilities; any independent contractor providing goods or services to a railroad; and any employee of such owner, manufacturer, lessor, lessee, or independent contractor) who violates any requirement of this part or causes the violation of any such requirement is subject to a civil penalty of at least $550 and not more than $16,000 per violation, except that: Penalties may be assessed against individuals only for willful violations, and, where a grossly negligent violation or a pattern of repeated violations has created an imminent hazard of death or injury to persons, or has caused death or injury, a penalty not to exceed $27,000 per violation may be assessed. Each day a violation continues shall constitute a separate offense. See appendix A to this part for a statement of agency civil penalty policy.

[63 FR 11623, Mar. 10, 1998, as amended at 69 FR 30595, May 28, 2004; 72 FR 51197, Sept. 6, 2007]

§ 235.10 Contents of applications.

(a) The application may be submitted by letter and shall contain the following information:

(1) The corporate name of each applicant;

(2) The manner in which applicant is involved;

(3) The location of the project, giving name of operating division and nearest station;

(4) The track or tracks involved;

(5) A complete description of proposed changes as they would affect the existing facilities or of the section from which relief is sought;

(6) The reason for proposed changes or justification for relief from the requirements;

(7) The approximate dates of beginning and completion of project;

(8) Changes in operating practices, temporary or permanent;

(9) Whether safety of operation will be affeced, and if so, how; and

(10) Whether proposed changes will conform to the Federal Railroad Administration's Rules, Standards and Instructions (part 236 of this title).

(b) [Reserved]

(Approved by the Office of Management and Budget under control number 2130–0042)

§ 235.12 Additional required information-prints.

(a) A print or prints, size 8 inches by 10½ inches, or 8½ inches by 11 inches, or folded to 8 inches by 10½ inches or to 8½ inches by 11 inches, shall be furnished with each application.

(b) The print or prints shall be to scale or by indicated dimensions, using Association of American Railroads graphic symbols.

(c) The following information shall be shown on the print or prints:

(1) Present and proposed arrangement of tracks and signal facilities;

(2) Name of carrier;

(3) Operating division;

(4) Place and State; and

(5) Timetable directions of movements.

(d) If stopping distances are involved, the following information shall also be shown:

(1) Curvature and grade;

(2) Maximum authorized speeds of trains; and

(3) Length of signal control circuits for each signal indication displayed.

(e) The following color scheme is suggested on prints:

(1) Installations, relocations, and added signal aspects should be colored, preferably in yellow;

(2) Removals, discontinuances, and abandonments should be colored, preferably in red; and

(3) Existing facilities not pertinent to change proposed in application should be shown uncolored.

(Approved by the Office of Management and Budget under control number 2130–0042)

§ 235.13 Filing procedure.

(a) Applications or requests for reconsideration of an application shall be submitted by an authorized officer of the carrier.

(b) The original and two copies of each application with supporting papers should be filed.

(c) The application and correspondence in reference thereto should be addressed to the Associate Administrator for Safety, Federal Railroad Administration, Washington, DC 20590.

(d) A separate application shall be filed for each project.

(e) At a joint facility where changes are proposed in the automatic block signal system, interlocking, traffic control system, automatic train stop, train control, or cab signal system on the tracks of more than one carrier, or if more than one carrier will be affected by the proposed changes or relief sought, a joint application signed by all carriers affected shall be filed.

(f) Where only one carrier at a joint facility is affected by the discontinuance or modification of the installation or relief sought, it shall be responsible for filing the application. It shall also certify that the other joint carriers have been notified of the filing of its application.

(Approved by the Office of Management and Budget under control number 2130–0042)

§ 235.14 Notice.

The FRA will publish notice of the filing of an application or a request for reconsideration of an application in the FEDERAL REGISTER and a copy of such notice will be available at the Department of Transportation Central Docket Management System, Nassif Building, Room Pl–401, 400 Seventh Street, S.W., Washington, D.C. 20590, and on the Docket Management System's Web site at *http://dms.dot.gov*.

[64 FR 70195, Dec. 16, 1999]

§ 235.20 Protests.

(a) A protest against the granting of an application shall set forth specifically the grounds upon which it is made, and contain a concise statement of the interest of protestant in the proceeding.

(b) The original and two copies of any protest shall be filed with the Associate Administrator for Safety, Federal Railroad Administration, Washington, DC 20590, and one copy shall be furnished to each applicant.

(c) Protests should be filed within the time limit set forth in the public notice.

(d) The protestant shall certify that service of a copy of its protest was made upon each applicant.

(e) Request for hearing must be accompanied with a showing why the protestant is unable to properly present his or her position by written statements.

EFFECTIVE DATE NOTE: At 49 FR 3380, Jan. 26, 1984, part 235 was revised. This section contains information collection and recordkeeping requirements and will not become effective until approval has been given by the Office of Management and Budget.

APPENDIX A TO PART 235—SCHEDULE OF CIVIL PENALTIES[1]

Section	Violation	Willful violation
235.5 Changes requiring filing of application	$5,000	$7,500

[53 FR 52936, Dec. 29, 1988, as amended at 69 FR 62818, Oct. 28, 2004]

[1] A penalty may be assessed against an individual only for a willful violation. The Administrator reserves the right to assess a penalty of up to $27,000 for any violation where circumstances warrant. See 49 CFR part 209, appendix A.

PART 236—RULES, STANDARDS, AND INSTRUCTIONS GOVERNING THE INSTALLATION, INSPECTION, MAINTENANCE, AND REPAIR OF SIGNAL AND TRAIN CONTROL SYSTEMS, DEVICES, AND APPLIANCES

Sec.
236.0 Applicability, minimum requirements, and penalties.

Subpart A—Rules and Instructions: All Systems

GENERAL

236.1 Plans, where kept.
236.2 Grounds.
236.3 Locking of signal apparatus housings.
236.4 Interference with normal functioning of device.
236.5 Design of control circuits on closed circuit principle.
236.6 Hand-operated switch equipped with switch circuit controller.
236.7 Circuit controller operated by switch-and-lock movement.
236.8 Operating characteristics of electromagnetic, electronic, or electrical apparatus.
236.9 Selection of circuits through indicating or annunciating instruments.
236.10 Electric locks, force drop type; where required.
236.11 Adjustment, repair, or replacement of component.
236.12 Spring switch signal protection; where required.
236.13 Spring switch; selection of signal control circuits through circuit controller.
236.14 Spring switch signal protection; requirements.
236.15 Timetable instructions.
236.16 Electric lock, main track releasing circuit.
236.17 Pipe for operating connections, requirements.
236.18 Software management control plan.

ROADWAY SIGNALS AND CAB SIGNALS

236.21 Location of roadway signals.
236.22 Semaphore signal arm; clearance to other objects.
236.23 Aspects and indications.
236.24 Spacing of roadway signals.
236.25 [Reserved]
236.26 Buffing device, maintenance.

TRACK CIRCUITS

236.51 Track circuit requirements.
236.52 Relayed cut-section.
236.53 Track circuit feed at grade crossing.
236.54 Minimum length of track circuit.
236.55 Dead section; maximum length.
236.56 Shunting sensitivity.
236.57 Shunt and fouling wires.
236.58 Turnout, fouling section.
236.59 Insulated rail joints.
236.60 Switch shunting circuit; use restricted.

WIRES AND CABLES

236.71 Signal wires on pole line and aerial cable.
236.72 [Reserved]
236.73 Open-wire transmission line; clearance to other circuits.
236.74 Protection of insulated wire; splice in underground wire.
236.75 [Reserved]
236.76 Tagging of wires and interference of wires or tags with signal apparatus.

INSPECTIONS AND TESTS; ALL SYSTEMS

236.101 Purpose of inspection and tests; removal from service of relay or device failing to meet test requirements.
236.102 Semaphore or searchlight signal mechanism.
236.103 Switch circuit controller or point detector.
236.104 Shunt fouling circuit.
236.105 Electric lock.
236.106 Relays.
236.107 Ground tests.
236.108 Insulation resistance tests, wires in trunking and cables.
236.109 Time releases, timing relays and timing devices.
236.110 Results of tests.

Subpart B—Automatic Block Signal Systems

STANDARDS

236.201 Track-circuit control of signals.
236.202 Signal governing movements over hand-operated switch.
236.203 Hand operated crossover between main tracks; protection.
236.204 Track signaled for movements in both directions, requirements.
236.205 Signal control circuits; requirements.
236.206 Battery or power supply with respect to relay; location.
236.207 Electric lock on hand-operated switch; control.

Subpart C—Interlocking

STANDARDS

236.301 Where signals shall be provided.
236.302 Track circuits and route locking.
236.303 Control circuits for signals, selection through circuit controller operated by switch points or by switch locking mechanism.
236.304 Mechanical locking or same protection effected by circuits.

236.305 Approach or time locking.
236.306 Facing point lock or switch-and-lock movement.
236.307 Indication locking.
236.308 Mechanical or electric locking or electric circuits; requisites.
236.309 Loss of shunt protection; where required.
236.310 Signal governing approach to home signal.
236.311 Signal control circuits, selection through track relays or devices functioning as track relays and through signal mechanism contacts and time releases at automatic interlocking.
236.312 Movable bridge, interlocking of signal appliances with bridge devices.
236.313 [Reserved]
236.314 Electric lock for hand-operated switch or derail.

RULES AND INSTRUCTIONS

236.326 Mechanical locking removed or disarranged; requirement for permitting train movements through interlocking.
236.327 Switch, movable-point frog or split-point derail.
236.328 Plunger of facing-point lock.
236.329 Bolt lock.
236.330 Locking dog of switch-and-lock movement.
236.331–236.333 [Reserved]
236.334 Point detector.
236.335 Dogs, stops and trunnions of mechanical locking.
236.336 Locking bed.
236.337 Locking faces of mechanical locking; fit.
236.338 Mechanical locking required in accordance with locking sheet and dog chart.
236.339 Mechanical locking; maintenance requirements.
236.340 Electromechanical interlocking machine; locking between electrical and mechanical levers.
236.341 Latch shoes, rocker links, and quandrants.
236.342 Switch circuit controller.

INSPECTION AND TESTS

236.376 Mechanical locking.
236.377 Approach locking.
236.378 Time locking.
236.379 Route locking.
236.380 Indication locking.
236.381 Traffic locking.
236.382 Switch obstruction test.
236.383 Valve locks, valves, and valve magnets.
236.384 Cross protection.
236.385 [Reserved]
236.386 Restoring feature on power switches.
236.387 Movable bridge locking.

Subpart D—Traffic Control Systems

STANDARDS

236.401 Automatic block signal system and interlocking standards applicable to traffic control systems.
236.402 Signals controlled by track circuits and control operator.
236.403 Signals at controlled point.
236.404 Signals at adjacent control points.
236.405 Track signaled for movements in both directions, change of direction of traffic.
236.406 [Reserved]
236.407 Approach or time locking; where required.
236.408 Route locking.
236.409 [Reserved]
236.410 Locking, hand-operated switch; requirements.

RULES AND INSTRUCTIONS

236.426 Interlocking rules and instructions applicable to traffic control systems.

INSPECTION AND TESTS

236.476 Interlocking inspections and tests applicable to traffic control systems.

Subpart E—Automatic Train Stop, Train Control and Cab Signal Systems

STANDARDS

236.501 Forestalling device and speed control.
236.502 Automatic brake application, initiation by restrictive block conditions stopping distance in advance.
236.503 Automatic brake application; initiation when predetermined rate of speed exceeded.
236.504 Operation interconnected with automatic block-signal system.
236.505 Proper operative relation between parts along roadway and parts on locomotive.
236.506 Release of brakes after automatic application.
236.507 Brake application; full service.
236.508 Interference with application of brakes by means of brake valve.
236.509 Two or more locomotives coupled.
236.510 [Reserved]
236.511 Cab signals controlled in accordance with block conditions stopping distance in advance.
236.512 Cab signal indication when locomotive enters block where restrictive conditions obtain.
236.513 Audible indicator.
236.514 Interconnection of cab signal system with roadway signal system.
236.515 Visibility of cab signals.
236.516 Power supply.

RULES AND INSTRUCTIONS; ROADWAY

236.526 Roadway element not functioning properly.
236.527 Roadway element insulation resistance.
236.528 Restrictive condition resulting from open hand-operated switch; requirement.
236.529 Roadway element inductor; height and distance from rail.
236.530 [Reserved]
236.531 Trip arm; height and distance from rail.
236.532 Strap iron inductor; use restricted.
236.533 [Reserved]
236.534 Entrance to equipped territory; requirements.

RULES AND INSTRUCTIONS; LOCOMOTIVES

236.551 Power supply voltage; requirement.
236.552 Insulation resistance; requirement.
236.553 Seal, where required.
236.554 Rate of pressure reduction; equalizing reservoir or brake pipe.
236.555 Repaired or rewound receiver coil.
236.556 Adjustment of relay.
236.557 Receiver; location with respect to rail.
236.558–236.559 [Reserved]
236.560 Contact element, mechanical trip type; location with respect to rail.
236.561 [Reserved]
236.562 Minimum rail current required.
236.563 Delay time.
236.564 Acknowledging time.
236.565 Provision made for preventing operation of pneumatic break-applying apparatus by double-heading cock; requirement.
236.566 Locomotive of each train operating in train stop, train control or cab signal territory; equipped.
236.567 Restrictions imposed when device fails and/or is cut out en route.
236.568 Difference between speeds authorized by roadway signal and cab signal; action required.

INSPECTION AND TESTS; ROADWAY

236.576 Roadway element.
236.577 Test, acknowledgement, and cut-in circuits.

INSPECTION AND TESTS; LOCOMOTIVE

236.586 Daily or after trip test.
236.587 Departure test.
236.588 Periodic test.
236.589 Relays.
236.590 Pneumatic apparatus.

Subpart F—Dragging Equipment and Slide Detectors and Other Similar Protective Devices

STANDARDS

236.601 Signals controlled by devices; location.

Subpart G—Definitions

236.700 Definitions.
236.701 Application, brake; full service.
236.702 Arm, semaphore.
236.703 Aspect.
236.704 [Reserved]
236.705 Bar, locking.
236.706 Bed, locking.
236.707 Blade, semaphore.
236.708 Block.
236.709 Block, absolute.
236.710 Block, latch.
236.711 Bond, rail joint.
236.712 Brake pipe.
236.713 Bridge, movable.
236.714 Cab.
236.715–236.716 [Reserved]
236.717 Characteristics, operating.
236.718 Chart, dog.
236.719 Circuit, acknowledgment.
236.720 Circuit, common return.
236.721 Circuit, control.
236.722 Circuit, cut-in.
236.723 Circuit, double wire; line.
236.724 Circuit, shunt fouling.
236.725 Circuit, switch shunting.
236.726 Circuit, track.
236.727 Circuit, track; coded.
236.728 Circuit, trap.
236.729 Cock, double heading.
236.730 Coil, receiver.
236.731 Controller, circuit.
236.732 Controller, circuit; switch.
236.733 Current, foreign.
236.734 Current of traffic.
236.735 Current, leakage.
236.736 Cut-section.
236.737 Cut-section, relayed.
236.738 Detector, point.
236.739 Device, acknowledging.
236.740 Device, reset.
236.741 Distance, stopping.
236.742 Dog, locking.
236.743 Dog, swing.
236.744 Element, roadway.
236.745 Face, locking.
236.746 Feature, restoring.
236.747 Forestall.
236.748 [Reserved]
236.749 Indication.
236.750 Interlocking, automatic.
236.751 Interlocking, manual.
236.752 Joint, rail, insulated.
236.753 Limits, interlocking.
236.754 Line, open wire.
236.755 Link, rocker.

236.756 Lock, bolt.
236.757 Lock, electric.
236.758 Lock, electric, forced drop.
236.759 Lock, facing point.
236.760 Locking, approach.
236.761 Locking, electric.
236.762 Locking, indication.
236.763 Locking, latch operated.
236.764 Locking, lever operated.
236.765 Locking, mechanical.
236.766 Locking, movable bridge.
236.767 Locking, route.
236.768 Locking, time.
236.769 Locking, traffic.
236.770 Locomotive.
236.771 Machine, control.
236.772 Machine, interlocking.
236.773 Movements, conflicting.
236.774 Movement, facing.
236.775 Movement, switch-and-lock.
236.776 Movement, trailing.
236.777 Operator, control.
236.778 Piece, driving.
236.779 Plate, top.
236.780 Plunger, facing point lock.
236.781 [Reserved]
236.782 Point, controlled.
236.783 Point, stop-indication.
236.784 Position, deenergized.
236.785 Position, false restrictive.
236.786 Principle, closed circuit.
236.787 Protection, cross.
236.787a Railroad.
236.788 Receiver.
236.789 Relay, timing.
236.790 Release, time.
236.791 Release, value.
236.792 Reservoir, equalizing.
236.793 Rod, lock.
236.794 Rod, up-and-down.
236.795 Route.
236.796 Routes, conflicting.
236.797 Route, interlocked.
236.798 Section, dead.
236.799 Section, fouling.
236.800 Sheet, locking.
236.801 Shoe, latch.
236.802 Shunt.
236.802a Siding.
236.803 Signal, approach.
236.804 Signal, block.
236.805 Signal, cab.
236.806 Signal, home.
236.807 Signal, interlocking.
236.808 Signals, opposing.
236.809 Signal, slotted mechanical.
236.810 Spectacle, semaphore arm.
236.811 Speed, medium.
236.812 Speed, restricted.
236.813 Speed, slow.
236.813a State, most restrictive.
236.814 Station, control.
236.815 Stop.
236.816 Superiority of trains.
236.817 Switch, electro-pneumatic.
236.818 Switch, facing point.
236.819 Switch, hand operated.
236.820 Switch, interlocked.
236.820a Switch, power-operated.
236.821 Switch, sectionalizing.
236.822 Switch, spring.
236.823 Switch, trailing point.
236.824 System, automatic block signal.
236.825 System, automatic train control.
236.826 System, automatic train stop.
236.827 System, block signal.
236.828 System, traffic control.
236.829 Terminal, initial.
236.830 Time, acknowledging.
236.831 Time, delay.
236.831a Track, main.
236.832 Train.
236.833 Train, opposing.
236.834 Trip.
236.835 Trunking.
236.836 Trunnion.
236.837 Valve, electro-pneumatic.
236.838 Wire, shunt.

Subpart H—Standards for Processor-Based Signal and Train Control Systems

236.901 Purpose and scope.
236.903 Definitions.
236.905 Railroad Safety Program Plan (RSPP).
236.907 Product Safety Plan (PSP).
236.909 Minimum performance standard.
236.911 Exclusions.
236.913 Filing and approval of PSPs.
236.915 Implementation and operation.
236.917 Retention of records.
236.919 Operations and Maintenance Manual.
236.921 Training and qualification program, general.
236.923 Task analysis and basic requirements.
236.925 Training specific to control office personnel.
236.927 Training specific to locomotive engineers and other operating personnel.
236.929 Training specific to roadway workers.

APPENDIX A TO PART 236—CIVIL PENALTIES
APPENDIX B TO PART 236—APPENDIX B TO PART 236—RISK ASSESSMENT CRITERIA
APPENDIX C TO PART 236—SAFETY ASSURANCE CRITERIA AND PROCESSES
APPENDIX D TO PART 236—INDEPENDENT REVIEW OF VERIFICATION AND VALIDATION
APPENDIX E TO PART 236—HUMAN-MACHINE INTERFACE (HMI) DESIGN

AUTHORITY: 49 U.S.C. 20103, 20107, 20501–20505; 28 U.S.C. 2461, note; and 49 CFR 1.49.

SOURCE: 33 FR 19684, Dec. 25, 1968, unless otherwise noted.

§ 236.0 Applicability, minimum requirements, and penalties.

(a) Except as provided in paragraph (b) of this section, this part applies to all railroads.

(b) This part does not apply to—

(1) A railroad that operates only on track inside an installation that is not part of the general railroad system of transportation; or

(2) Rapid transit operations in an urban area that are not connected to the general railroad system of transportation.

(c) Where a passenger train is operated at a speed of 60 or more miles per hour, or a freight train is operated at a speed of 50 or more miles per hour, a block signal system complying with the provisions of this part shall be installed or a manual block system shall be placed permanently in effect which shall conform to the following conditions:

(1) A passenger train shall not be admitted to a block occupied by another train except under flag protection;

(2) No train shall be admitted to a block occupied by a passenger train except under flag protection;

(3) No train shall be admitted to a block occupied by an opposing train except under flag protection; and

(4) A freight train, including a work train, may be authorized to follow a freight train, including a work train, into a block but the following train must proceed prepared to stop within one-half the range of vision but not exceeding 20 miles per hour.

(d) Where any train is operated at a speed of 80 or more miles per hour, an automatic cab signal, automatic train stop or automatic train control system complying with the provisions of this part shall be installed.

(e) Nothing in this section authorizes the discontinuance of a block signal system, interlocking, traffic control system, automatic train stop, train control, or cab signal system without approval of the Federal Railroad Administration.

(f) Any person (an entity of any type covered under 1 U.S.C. 1, including but not limited to the following: a railroad; a manager, supervisor, official, or other employee or agent of a railroad; any owner, manufacturer, lessor, or lessee of railroad equipment, track, or facilities; any independent contractor providing goods or services to a railroad; and any employee of such owner, manufacturer, lessor, lessee, or independent contractor) who violates any requirement of this part or causes the violation of any such requirement is subject to a civil penalty of at least $550 and not more than $16,000 per violation, except that: Penalties may be assessed against individuals only for willful violations, and, where a grossly negligent violation or a pattern of repeated violations has created an imminent hazard of death or injury to persons, or has caused death or injury, a penalty not to exceed $27,000 per violation may be assessed. Each day a violation continues shall constitute a separate offense. See appendix A to this part for a statement of agency civil penalty policy.

(g) A person may also be subject to criminal penalties for knowingly and wilfully making a false entry in a record or report required to be made under this part, filing a false record or report, or violating any of the provisions of 49 U.S.C. 21311.

(h) The requirements of subpart H of this part apply to safety-critical processor-based signal and train control systems, including subsystems and components thereof, developed under the terms and conditions of that subpart.

[49 FR 3382, Jan. 26, 1984, as amended at 53 FR 52936, Dec. 29, 1988; 63 FR 11624, Mar. 10, 1998; 69 FR 30595, May 28, 2004; 70 FR 11095, Mar. 7, 2005; 72 FR 51198, Sept. 6, 2007]

Subpart A—Rules and Instructions: All Systems

GENERAL

§ 236.1 Plans, where kept.

As required for maintenance, plans shall be kept at all interlockings, automatic signals and controlled points. Plans shall be legible and correct.

[49 FR 3382, Jan. 26, 1984]

§ 236.2 Grounds.

Each circuit, the functioning of which affects the safety of train operations, shall be kept free of any ground

or combination of grounds which will permit a flow of current equal to or in excess of 75 percent of the release value of any relay or other electromagnetic device in the circuit, except circuits which include any track rail and except the common return wires of single-wire, single-break, signal control circuits using a grounded common, and alternating current power distribution circuits which are grounded in the interest of safety.

§ 236.3 Locking of signal apparatus housings.

Signal apparatus housings shall be secured against unauthorized entry.

[49 FR 3382, Jan. 26, 1984]

§ 236.4 Interference with normal functioning of device.

The normal functioning of any device shall not be interfered with in testing or otherwise without first taking measures to provide for safety of train operation which depends on normal functioning of such device.

[49 FR 3382, Jan. 26, 1984]

§ 236.5 Design of control circuits on closed circuit principle.

All control circuits the functioning of which affects safety of train operation shall be designed on the closed circuit principle, except circuits for roadway equipment of intermittent automatic train stop system.

§ 236.6 Hand-operated switch equipped with switch circuit controller.

Hand-operated switch equipped with switch circuit controller connected to the point, or with facing-point lock and circuit controller, shall be so maintained that when point is open one-fourth inch or more on facing-point switch and three-eights inch or more on trailing-point switch, track or control circuits will be opened or shunted or both, and if equipped with facing-point lock with circuit controller, switch cannot be locked. On such hand-operated switch, switch circuit controllers, facing-point locks, switch-and-lock movements, and their connections shall be securely fastened in place, and contacts maintained with an opening of not less than one-sixteenth inch when open.

§ 236.7 Circuit controller operated by switch-and-lock movement.

Circuit controller operated by switch-and-lock movement shall be maintained so that normally open contacts will remain closed and normally closed contacts will remain open until the switch is locked.

§ 236.8 Operating characteristics of electromagnetic, electronic, or electrical apparatus.

Signal apparatus, the functioning of which affects the safety of train operation, shall be maintained in accordance with the limits within which the device is designed to operate.

[49 FR 3382, Jan. 26, 1984]

§ 236.9 Selection of circuits through indicating or annunciating instruments.

Signal control and electric locking circuits shall not be selected through the contacts of instruments designed primarily for indicating or annunciating purposes in which an indicating element attached to the armature is arranged so that it can in itself cause improper operation of the armature.

§ 236.10 Electric locks, force drop type; where required.

Electric locks on new installations and new electric locks applied to existing installations shall be of the forced drop type.

§ 236.11 Adjustment, repair, or replacement of component.

When any component of a signal system, the proper functioning of which is essential to the safety of train operation, fails to perform its intended signaling function or is not in correspondence with known operating conditions, the cause shall be determined and the faulty component adjusted, repaired or replaced without undue delay.

[49 FR 3382, Jan. 26, 1984]

§ 236.12 Spring switch signal protection; where required.

Signal protection shall be provided for facing and trailing movements

through spring switch within interlocking limits and through spring switch installed in automatic block signal, train stop, train control or cab signal territory where train movements over the switch are made at a speed exceeding 20 miles per hour, except that signal protection shall be required only with the current of traffic on track signaled for movement in only one direction.

NOTE: Does not apply to spring switch installed prior to October 1, 1950 in automatic block signal, automatic train stop, or automatic train control territory.

[49 FR 3383, Jan. 26, 1984]

§ 236.13 Spring switch; selection of signal control circuits through circuit controller.

The control circuits of signals governing facing movements over a main track spring switch shall be selected through the contacts of a switch circuit controller, or through the contacts of relay repeating the position of such circuit controller, which, when normally closed switch point is open one-fourth inch or more, will cause such signals to display their most restrictive aspects, except that where a separate aspect is displayed for facing movements over the switch in the reverse position the signal shall display its most restrictive aspect when the switch points are open one-fourth inch or more from either the normal or reverse position.

§ 236.14 Spring switch signal protection; requirements.

(a) The indication of signal governing movements from siding to main track with the current of traffic on track signaled for movements in only one direction through a spring switch in automatic block signal territory shall be not less restrictive than ''Proceed at Restricted Speed' when the block, into which movements are governed by the signal, is occupied, and shall be ''Stop'' when the main track is occupied by a train approaching the switch within at least 1,500 feet in approach of the approach signal located stopping distance from the main track signal governing trailing movements over switch, except that the indication may be caused to be less restrictive if approach or time locking is used.

(b) The indication of signal governing movements against the current of traffic from the reverse main of main tracks to a single track, or signal governing movements from a siding to a main track signaled for movements in either direction, through a spring switch, in automatic block signal territory, shall be not less restrictive than ''Proceed at Restricted Speed'' when the block, into which movements are governed by the signal, is occupied by a preceding train, and shall be ''Stop'' when the block on the single track into which the signal governs is occupied by an opposing train.

(c) The indication of signal governing movements against the current of traffic from the reverse main of main tracks to a single track or signal governing movements from a siding to a main track signaled for movements in either direction through a spring switch in automatic block signal territory shall be ''Stop'' when the normal direction main track of the double track or the single track signaled for movements in both directions is occupied by a train approaching the switch within at least 1,500 feet in approach of the approach signal located stopping distance from the main track signal governing trailing movements over switch, except that indication may be caused to be less restrictive if approach or time locking is used.

§ 236.15 Timetable instructions.

Automatic block, traffic control, train stop, train control and cab signal territory shall be designated in timetable instructions.

§ 236.16 Electric lock, main track releasing circuit.

When an electric lock releasing circuit is provided on the main track to permit a train or an engine to diverge from the main track without time delay, the circuit shall be of such length to permit occupancy of the circuit to be seen by a crew member stationed at the switch. When the releasing circuit extends into the fouling circuit, a train or engine on the siding shall be prevented from occupying the releasing circuit by a derail either

pipe-connected to switch point or equipped with an independently operated electric lock.

[49 FR 3383, Jan. 26, 1984]

§ 236.17 Pipe for operating connections, requirements.

(a) Steel or wrought-iron pipe one inch or larger, or members of equal strength, shall be used for operating connections for switches, derails, movable-point frogs, facing-point locks, rail-locking devices of movable bridge protected by interlocking, and mechanically operated signals, except up-and-down rod which may be three-fourths inch pipe or solid rod. Pipe shall be fully screwed into coupling and both ends of each pipe shall be riveted to pipe plug with 2 rivets.

(b) Pipeline shall not be out of alignment sufficiently to interfere with proper operation, shall be properly compensated for temperature changes, and supported on carriers spaced not more than 8 feet apart on tangent and curve of less than 2° and not more than 7 feet apart on curve of 2° or more. With lever in any position, couplings in pipe line shall not foul carriers.

[49 FR 3383, Jan. 26, 1984]

§ 236.18 Software management control plan.

(a) Within 6 months of June 6, 2005, each railroad shall develop and adopt a software management control plan for its signal and train control systems. A railroad commencing operations after June 6, 2005, shall adopt a software management control plan for its signal and train control systems prior to commencing operations.

(b) Within 30 months of the completion of the software management control plan, each railroad shall have fully implemented such plan.

(c) For purposes of this section, ''software management control plan'' means a plan designed to ensure that the proper and intended software version for each specific site and location is documented (mapped) and maintained through the life-cycle of the system. The plan must further describe how the proper software configuration is to be identified and confirmed in the event of replacement, modification, or disarrangement of any part of the system.

[70 FR 11095, Mar. 7, 2005]

ROADWAY SIGNALS AND CAB SIGNALS

§ 236.21 Location of roadway signals.

Each roadway signal shall be positioned and aligned so that its aspects can be clearly associated with the track it governs.

[49 FR 3383, Jan. 26, 1984]

§ 236.22 Semaphore signal arm; clearance to other objects.

At least one-half inch clearance shall be provided between semaphore signal arm, and any object that may interfere with its operation.

§ 236.23 Aspects and indications.

(a) Aspects shall be shown by the position of semaphore blades, color of lights, position of lights, flashing of lights, or any combination thereof. They may be qualified by marker plate, number plate, letter plate, marker light, shape and color of semaphore blades or any combination thereof, subject to the following conditions:

(1) Night aspects of roadway signals, except qualifying appurtenances, shall be shown by lights; day aspects by lights or semaphore arms. A single white light shall not be used.

(2) Reflector lenses or buttons or other devices which depend for visibility upon reflected light from an external source shall not be used hereafter in night aspects, except qualifying appurtenances.

(b) The aspects of cab signals shall be shown by lights or by illuminated letters or numbers.

(c) Each aspect displayed by a signal shall be identified by a name and shall indicate action to be taken. Only one name and indication shall apply to those aspects indicating the same action to be taken; the same aspect shall not be used with any other name and indication.

(d) The fundamental indications of signal aspects shall conform to the following:

(1) A red light, a series of horizontal lights or a semaphore blade in a horizontal position shall be used to indicate stop.

(2) A yellow light, a lunar light, or a series of lights or a semaphore blade in the upper or lower quadrant at an angle of approximately 45 degrees to the vertical, shall be used to indicate that speed is to be restricted and stop may be required.

(3) A green light, a series of vertical lights, or a semaphore blade in a vertical position in the upper quadrant or 60° or 90° in the lower quadrant shall be used to indicate proceed at authorized speed.

(e) The names, indications, and aspects of roadway and cab signals shall be defined in the carrier's Operating Rule Book or Special Instructions. Modifications shall be filed with the FRA within thirty days after such modifications become effective.

(f) The absence of a qualifying appurtenance, the failure of a lamp in a light signal, or a false restrictive position of an arm of a semaphore signal shall not cause the display of a less restrictive aspect than intended.

[33 FR 19684, Dec. 25, 1968, as amended at 49 FR 3383, Jan. 26, 1984]

§ 236.24 Spacing of roadway signals.

Each roadway signal shall be located with respect to the next signal or signals in advance which govern train movements in the same direction so that the indication of a signal displaying a restrictive aspect can be complied with by means of a brake application, other than an emergency application, initiated at such signal, either by stopping at the signal where a stop is required, or by a reduction in speed to the rate prescribed by the next signal in advance where reduced speed is required.

§ 236.25 [Reserved]

§ 236.26 Buffing device, maintenance.

Buffing device shall be maintained so as not to cause the signal to display a less restrictive aspect than intended.

TRACK CIRCUITS

§ 236.51 Track circuit requirements.

Track relay controlling home signals shall be in deenergized position, or device that functions as a track relay controlling home signals shall be in its most restrictive state, and the track circuit of an automatic train stop, train control, or cab signal system shall be deenergized in the rear of the point where any of the following conditions exist:

(a) When a rail is broken or a rail or switch-frog is removed except when a rail is broken or removed in the shunt fouling circuit of a turnout or crossover, provided, however, that shunt fouling circuit may not be used in a turnout through which permissible speed is greater than 45 miles per hour. It shall not be a violation of this requirement if a track circuit is energized:

(1) When a break occurs between the end of rail and track circuit connector; within the limits of rail-joint bond, appliance or other protective device, which provides a bypath for the electric current, or

(2) As result of leakage current or foreign current in the rear of a point where a break occurs.

(b) When a train, locomotive, or car occupies any part of a track circuit, including fouling section of turnout except turnouts of hand-operated main track crossover. It shall not be a violation of this requirement where the presence of sand, rust, dirt, grease, or other foreign matter prevents effective shunting, except that where such conditions are known to exist adequate measures to safeguard train operation must be taken.

(c) Where switch shunting circuit is used:

(1) Switch point is not closed in normal position.

(2) A switch is not locked where facing-point lock with circuit controller is used.

(3) An independently operated fouling-point derail equipped with switch circuit controller is not in derailing position.

[33 FR 19684, Dec. 25, 1968, as amended at 49 FR 3383, Jan. 26, 1984]

§ 236.52 Relayed cut-section.

Where relayed cut-section is used in territory where noncoded direct-current track circuits are in use the energy circuit to the adjoining track shall be open and the track circuit shunted when the track relay at such cut-section is in deenergized position.

§ 236.53 Track circuit feed at grade crossing.

At grade crossing with an electric railroad where foreign current is present, the electric energy for noncoded direct current track circuit shall feed away from the crossing.

§ 236.54 Minimum length of track circuit.

When a track circuit shorter than maximum inner wheelbase of any locomotive or car operated over such track circuit is used for control of signaling facilities, other means shall be used to provide the equivalent of track circuit protection.

[49 FR 3383, Jan. 26, 1984]

§ 236.55 Dead section; maximum length.

Where dead section exceeds 35 feet, a special circuit shall be installed. Where shortest outer wheelbase of a locomotive operating over such dead section is less than 35 feet, the maximum length of the dead section shall not exceed the length of the outer wheelbase of such locomotive unless special circuit is used.

[49 FR 3383, Jan. 26, 1984]

§ 236.56 Shunting sensitivity.

Each track circuit controlling home signal or approach locking shall be so maintained that track relay is in deenergized position, or device that functions as a track relay shall be in its most restrictive state if, when track circuit is dry, a shunt of 0.06 ohm resistance is connected across the track rails of the circuit, including fouling sections of turnouts.

[49 FR 3383, Jan. 26, 1984]

§ 236.57 Shunt and fouling wires.

(a) Except as provided in paragraph (b) of this section, shunt wires and fouling wires hereafter installed or replaced shall consist of at least two discrete conductors, and each shall be of sufficient conductivity and maintained in such condition that the track relay will be in deenergized position, or device that functions as a track relay will be in its most restrictive state, when the circuit is shunted.

(b) This rule does not apply to shunt wires where track or control circuit is opened by the switch circuit controller.

[49 FR 3383, Jan. 26, 1984]

§ 236.58 Turnout, fouling section.

Rail joints within the fouling section shall be bonded, and fouling section shall extend at least to a point where sufficient tract centers and allowance for maximum car overhang and width will prevent interference with train, locomotive, or car movement on the adjacent track.

[49 FR 3383, Jan. 26, 1984]

§ 236.59 Insulated rail joints.

Insulated rail joints shall be maintained in condition to prevent sufficient track circuit current from flowing between the rails separated by the insulation to cause a failure of any track circuit involved.

§ 236.60 Switch shunting circuit; use restricted.

Switch shunting circuit shall not be hereafter installed, except where tract or control circuit is opened by the circuit controller.

[49 FR 3384, Jan. 26, 1984]

WIRES AND CABLES

§ 236.71 Signal wires on pole line and aerial cable.

Signal wire on pole line shall be securely tied in on insulator properly fastened to crossarm or bracket supported by pole or other support. Signal wire shall not interfere with, or be interfered by, other wires on the pole line. Aerial cable shall be supported by messenger.

[49 FR 3384, Jan. 26, 1984]

§ 236.72 [Reserved]

§ 236.73 Open-wire transmission line; clearance to other circuits.

Open-wire transmission line operating at voltage of 750 volts or more shall be placed not less than 4 feet above the nearest crossarm carrying signal or communication circuits.

§ 236.74 Protection of insulated wire; splice in underground wire.

Insulated wire shall be protected from mechanical injury. The insulation shall not be punctured for test purposes. Splice in underground wire shall have insulation resistance at least equal to the wire spliced.

§ 236.75 [Reserved]

§ 236.76 Tagging of wires and interference of wires or tags with signal apparatus.

Each wire shall be tagged or otherwise so marked that it can be identified at each terminal. Tags and other marks of identification shall be made of insulating material and so arranged that tags and wires do not interfere with moving parts of apparatus.

[49 FR 3384, Jan. 26, 1984]

INSPECTIONS AND TESTS; ALL SYSTEMS

§ 236.101 Purpose of inspection and tests; removal from service of relay or device failing to meet test requirements.

The following inspections and tests shall be made in accordance with specifications of the carrier, subject to approval of the FRA, to determine if the apparatus and/or equipment is maintained in condition to perform its intended function. Electronic device, relay, or other electromagnetic device which fails to meet the requirements of specified tests shall be removed from service, and shall not be restored to service until its operating characteristics are in accordance with the limits within which such device or relay is designed to operate.

[49 FR 3384, Jan. 26, 1984]

§ 236.102 Semaphore or searchlight signal mechanism.

(a) Semaphore signal mechanism shall be inspected at least once every six months, and tests of the operating characteristics of all parts shall be made at least once every two years.

(b) Searchlight signal mechanism shall be inspected, and the mechanical movement shall be observed while operating the mechanism to all positions, at least once every six months. Tests of the operating characteristics shall be made at least once every two years.

[49 FR 3384, Jan. 26, 1984]

§ 236.103 Switch circuit controller or point detector.

Switch circuit controller, circuit controller, or point detector operated by hand-operated switch or by power-operated or mechanically-operated switch-and-lock movement shall be inspected and tested at least once every three months.

[49 FR 3384, Jan. 26, 1984]

§ 236.104 Shunt fouling circuit.

Shunt fouling circuit shall be inspected and tested at least once every three months.

§ 236.105 Electric lock.

Electric lock, except forced-drop type, shall be tested at least once every two years.

§ 236.106 Relays.

Each relay, the functioning of which affects the safety of train operations, shall be tested at least once every four years except:

(a) Alternating current centrifugal type relay shall be tested at least once every 12 months;

(b) Alternating current vane type relay and direct current polar type relay shall be tested at least once every 2 years; and

(c) Relay with soft iron magnetic structure shall be tested at least once every 2 years.

[49 FR 3384, Jan. 26, 1984]

§ 236.107 Ground tests.

(a) Except as provided in paragraph (b) of this section, a test for grounds on

each energy bus furnishing power to circuits, the functioning of which affects the safety of train operation, shall be made when such energy bus is placed in service, and shall be made at least once every three months thereafter.

(b) The provisions of this rule shall not apply to track circuit wires, common return wires of grounded common single-break circuits, or alternating current power distribution circuits grounded in the interest of safety.

[49 FR 3384, Jan. 26, 1984]

§ 236.108 Insulation resistance tests, wires in trunking and cables.

(a) Insulation resistance of wires and cables, except wires connected directly to track rails, shall be tested when wires, cables, and insulation are dry. Insulation resistance tests shall be made between all conductors and ground, and between conductors in each multiple conductor cable, and between conductors in trunking, when wires or cables are installed and at least once every ten years thereafter.

(b) Then insulation resistance of wire or cable is found to be less than 500,000 ohms, prompt action shall be taken to repair or replace the defective wire or cable and until such defective wire or cable is replaced, insulation resistance test shall be made annually.

(c) In no case shall a circuit be permitted to function on a conductor having an insulation resistance to ground or between conductors of less than 200,000 ohms during the period required for repair or replacement.

[49 FR 3384, Jan. 26, 1984]

§ 236.109 Time releases, timing relays and timing devices.

Time releases, timing relays and timing devices shall be tested at least once every twelve months. The timing shall be maintained at not less than 90 percent of the predetermined time interval, which shall be shown on the plans or marked on the time release, timing relay, or timing device.

[49 FR 3384, Jan. 26, 1984]

§ 236.110 Results of tests.

(a) Results of tests made in compliance with §§ 236.102 to 236.109, inclusive; 236.376 to 236.387, inclusive; 236.576; 236.577; 236.586 to 236.589, inclusive; and 236.917(a) must be recorded on preprinted forms provided by the railroad or by electronic means, subject to approval by the FRA Associate Administrator for Safety. These records must show the name of the railroad, place and date, equipment tested, results of tests, repairs, replacements, adjustments made, and condition in which the apparatus was left. Each record must be:

(1) Signed by the employee making the test, or electronically coded or identified by number of the automated test equipment (where applicable);

(2) Unless otherwise noted, filed in the office of a supervisory official having jurisdiction; and

(3) Available for inspection and replication by FRA and FRA-certified State inspectors.

(b) Results of tests made in compliance with § 236.587 must be retained for 92 days.

(c) Results of tests made in compliance with § 236.917(a) must be retained as follows:

(1) Results of tests that pertain to installation or modification must be retained for the life-cycle of the equipment tested and may be kept in any office designated by the railroad; and

(2) Results of periodic tests required for maintenance or repair of the equipment tested must be retained until the next record is filed but in no case less than one year.

(d) Results of all other tests listed in this section must be retained until the next record is filed but in no case less than one year.

(e) Electronic or automated tracking systems used to meet the requirements contained in paragraph (a) of this section must be capable of being reviewed and monitored by FRA at any time to ensure the integrity of the system. FRA's Associate Administrator for Safety may prohibit or revoke a railroad's authority to utilize an electronic or automated tracking system in lieu of preprinted forms if FRA finds that the electronic or automated tracking system is not properly secured, is inaccessible to FRA, FRA-certified State inspectors, or railroad employees requiring access to discharge

their assigned duties, or fails to adequately track and monitor the equipment. The Associate Administrator for Safety will provide the affected railroad with a written statement of the basis for his or her decision prohibiting or revoking the railroad from utilizing an electronic or automated tracking system.

[70 FR 11095, Mar. 7, 2005]

Subpart B—Automatic Block Signal Systems

STANDARDS

§ 236.201 Track-circuit control of signals.

The control circuits for home signal aspects with indications more favorable than ''proceed at restricted speed'' shall be controlled automatically by track circuits extending through the entire block.

§ 236.202 Signal governing movements over hand-operated switch.

Signal governing movements over hand-operated switch in the facing direction shall display its most restrictive aspect when the points are open one-fourth inch or more and, in the trailing direction, three-eighths inch or more, except that where a separate aspect is displayed for facing movements over the switch in the normal and in the reverse position, the signal shall display its most restrictive aspect when the switch points are open one-fourth inch or more from either the normal or reverse position.

§ 236.203 Hand operated crossover between main tracks; protection.

At hand-operated crossover between main tracks, protection shall be provided by one of the following:

(a) An arrangement of one or more track circuits and switch circuit controllers,

(b) Facing point locks on both switches of the crossover, with both locks operated by a single lever, or

(c) Electric locking of the switches of the crossover. Signals governing movements over either switch shall display their most restrictive aspect when any of the following conditions exist:

(1) Where protection is provided by one or more track circuits and switch circuit controllers, and either switch is open or the crossover is occupied by a train, locomotive or car in such a manner as to foul the main track. It shall not be a violation of this requirement where the presence of sand, rust, dirt, grease or other foreign matter on the rail prevents effective shunting;

(2) Where facing point locks with a single lever are provided, and either switch is unlocked;

(3) Where the switches are electrically locked, before the electric locking releases.

§ 236.204 Track signaled for movements in both directions, requirements.

On track signaled for movements in both directions, a train shall cause one or more opposing signals immediately ahead of it to display the most restrictive aspect, the indication of which shall be not more favorable than ''proceed at restricted speed.'' Signals shall be so arranged and controlled that if opposing trains can simultaneously pass signals displaying proceed aspects and the next signal in advance of each such signal then displays an aspect requiring a stop, or its most restrictive aspect, the distance between opposing signals displaying such aspects shall be not less than the aggregate of the stopping distances for movements in each direction. Where such opposing signals are spaced stopping distance apart for movements in one direction only, signals arranged to display restrictive aspects shall be provided in approach to at least one of the signals. Where such opposing signals are spaced less than stopping distance apart for movements in one direction, signals arranged to display restrictive aspects shall be provided in approach to both such signals. In absolute permissive block signaling, when a train passes a head block signal, it shall cause the opposing head block signal to display an aspect with an indication not more favorable than ''stop.''

[33 FR 19684, Dec. 25, 1968, as amended at 49 FR 3384, Jan. 26, 1984]

§ 236.205 Signal control circuits; requirements.

The circuits shall be so installed that each signal governing train movements into a block will display its most restrictive aspect when any of the following conditions obtain within the block:

(a) Occupancy by a train, locomotive, or car,

(b) When points of a switch are not closed in proper position,

(c) When an independently operated fouling point derail equipped with switch circuit controller is not in derailing position,

(d) When a track relay is in de-energized position or a device which functions as a track relay is in its most restrictive state; or when signal control circuit is deenergized.

[33 FR 19684, Dec. 25, 1968, as amended at 49 FR 3385, Jan. 26, 1984]

§ 236.206 Battery or power supply with respect to relay; location.

The battery or power supply for each signal control relay circuit, where an open-wire circuit or a common return circuit is used, shall be located at the end of the circuit farthest from the relay.

§ 236.207 Electric lock on hand-operated switch; control.

Electric lock on hand-operated switch shall be controlled so that it cannot be unlocked until control circuits of signals governing movements over such switch have been opened. Approach or time locking shall be provided.

[49 FR 3385, Jan. 26, 1984]

Subpart C—Interlocking

STANDARDS

§ 236.301 Where signals shall be provided.

Signals shall be provided to govern train movements into and through interlocking limits, except that a signal shall not be required to govern movements over a hand-operated switch into interlocking limits if the switch is provided with an electric lock and a derail at the clearance point, either pipe-connected to the switch or independently locked, electrically. Electric locks installed under this rule must conform to the time and approach locking requirements of Rule 314 (without reference to the 20-mile exceptions), and those of either Rule 760 or Rule 768, as may be appropriate.

§ 236.302 Track circuits and route locking.

Track circuits and route locking shall be provided and shall be effective when the first pair of wheels of a locomotive or a car passes a point not more than 13 feet in advance of the signal governing its movement, measured from the center of the mast, or if there is no mast, from the center of the signal.

[49 FR 3385, Jan. 26, 1984]

§ 236.303 Control circuits for signals, selection through circuit controller operated by switch points or by switch locking mechanism.

The control circuit for each aspect with indication more favorable than ''proceed at restricted speed'' of power operated signal governing movements over switches, movable-point frogs and derails shall be selected through circuit controller operated directly by switch points or by switch locking mechanism, or through relay controlled by such circuit controller, for each switch, movable-point frog, and derail in the routes governed by such signal. Circuits shall be arranged so that such signal can display an aspect more favorable than ''proceed at restricted speed,'' only when each switch, movable-point frog, and derail in the route is in proper position.

§ 236.304 Mechanical locking or same protection effected by circuits.

Mechanical locking, or the same protection effected by means of circuits, shall be provided.

§ 236.305 Approach or time locking.

Approach or time locking shall be provided in connection with signals displaying aspects with indications more favorable than ''proceed at restricted speed.''

§ 236.306 Facing point lock or switch-and-lock movement.

Facing point lock or switch-and-lock movement shall be provided for mechanically operated switch, movable-point frog, or split-point derail.

§ 236.307 Indication locking.

Indication locking shall be provided for operative approach signals of the semaphore type, power-operated home signals, power-operated switches, movable-point frogs and derails, and for all approach signals except light signals, all aspects of which are controlled by polar or coded track circuits or line circuits so arranged that a single fault will not permit a more favorable aspect than intented to be displayed.

[49 FR 3385, Jan. 26, 1984]

§ 236.308 Mechanical or electric locking or electric circuits; requisites.

Mechanical or electric locking or electric circuits shall be installed to prevent signals from displaying aspects which permit conflicting movements except that opposing signals may display an aspect indicating proceed at restricted speed at the same time on a track used for switching movements only, by one train at a time. Manual interlocking in service as of the date of this part at which opposing signals on the same track are permitted simultaneously to display aspects authorizing conflicting movements when interlocking is unattended, may be continued, provided that simultaneous train movements in opposite directions on the same track between stations on either side of the interlocking are not permitted.

NOTE: Relief from the requirement of this section will be granted upon an adequate showing by an individual carrier to allow opposing signals on the same track simultaneously to display aspects to proceed through an interlocking which is unattended, provided that train movements in opposite directions on the same track between stations on either site of the interlocking are not permitted at the same time.

§ 236.309 Loss of shunt protection; where required.

(a) A loss of shunt of 5 seconds or less shall not permit an established route to be changed at an automatic interlocking.

(b) A loss of shunt of 5 seconds or less shall not permit the release of the route locking circuit of each power-operated switch hereafter installed.

[49 FR 3385, Jan. 26, 1984]

§ 236.310 Signal governing approach to home signal.

A signal shall be provided on main track to govern the approach with the current of traffic to any home signal except where the home signal is the first signal encountered when leaving yards or stations and authorized speed approaching such signal is not higher than slow speed. When authorized speed between home signals on route governed is 20 miles per hour or less, an inoperative signal displaying an aspect indicating ''approach next signal prepared to stop'' may be used to govern the approach to the home signal.

§ 236.311 Signal control circuits, selection through track relays or devices functioning as track relays and through signal mechanism contacts and time releases at automatic interlocking.

(a) The control circuits for aspects with indications more favorable than ''proceed at restricted speed'' shall be selected through track relays, or through devices that function as track relays, for all track circuits in the route governed.

(b) At automatic interlocking, signal control circuits shall be selected (1) through track relays, or devices that function as track relays, for all track circuits in the route governed and in all conflicting routes within the interlocking; (2) through signal mechanism contacts or relay contacts closed when signals for such conflicting routes display ''stop'' aspects; and (3) through normal contacts of time releases, time element relays, or timing devices for such conflicting routes, or contacts of relays repeating the normal position or normal state of such time releases, time element relays, or timing devices.

[49 FR 3385, Jan. 26, 1984]

§ 236.312 Movable bridge, interlocking of signal appliances with bridge devices.

When movable bridge is protected by interlocking the signal appliances shall be so interlocked with bridge devices that before a signal governing movements over the bridge can display an aspect to proceed the bridge must be locked and the track alined, with the bridge locking members within one inch of their proper positions and with the track rail on the movable span within three-eighths inch of correct surface and alinement with rail seating device on bridge abutment or fixed span. Emergency bypass switches and devices shall be locked or sealed.

[33 FR 19684, Dec. 25, 1968, as amended at 49 FR 3385, Jan. 26, 1984]

§ 236.313 [Reserved]

§ 236.314 Electric lock for hand-operated switch or derail.

Electric lock shall be provided for each hand-operated switch or derail within interlocking limits, except where train movements are made at not exceeding 20 miles per hour. At manually operated interlocking it shall be controlled by operator of the machine and shall be unlocked only after signals governing movements over such switch or derail display aspects indicating stop. Approach or time locking shall be provided.

RULES AND INSTRUCTIONS

§ 236.326 Mechanical locking removed or disarranged; requirement for permitting train movements through interlocking.

When mechanical locking of interlocking machine is being changed or is removed from the machine, or locking becomes disarranged or broken, unless protection equivalent to mechanical locking is provided by electric locking or electric circuits, train movements through the interlocking shall not be permitted until each switch, movable-point frog or derail in the route is spiked, clamped or blocked in proper position so that it cannot be moved by its controlling lever, and then train movements shall not exceed restricted speed until the interlocking is restored to normal operation. It will not be necessary to comply with this requirement at interlockings where protection is in service in accordance with section 303, provided that the signal controls are arranged so that the signals cannot display an aspect the indication of which is less restrictive than ''proceed at restricted speed.''

§ 236.327 Switch, movable-point frog or split-point derail.

Switch, movable-point frog, or split-point derail equipped with lock rod shall be maintained so that it can not be locked when the point is open three-eighths inch or more.

[49 FR 3385, Jan. 26, 1984]

§ 236.328 Plunger of facing-point lock.

Plunger of lever operated facing-point lock shall have at least 8-inch stroke. When lock lever is in unlocked position the end of the plunger shall clear the lock rod not more than one inch.

§ 236.329 Bolt lock.

Bolt lock shall be so maintained that signal governing movements over switch or derail and displaying an aspect indicating stop cannot be operated to display a less restrictive aspect while derail is in derailing position, or when switch point is open one-half inch or more.

§ 236.330 Locking dog of switch-and-lock movement.

Locking dog of switch-and-lock movement shall extend through lock rod one-half inch or more in either normal or reverse position.

§§ 236.331–236.333 [Reserved]

§ 236.334 Point detector.

Point detector shall be maintained so that when switch mechanism is locked in normal or reverse position, contacts cannot be opened by manually applying force at the closed switch point. Point detector circuit controller shall be maintained so that the contacts will not assume the position corresponding to switch point closure if the switch point is prevented by an obstruction, from closing to within one-fourth inch where latch-out device is not used, and

to within three-eighths inch where latch-out device is used.

§ 236.335 Dogs, stops and trunnions of mechanical locking.

Driving pieces, dogs, stops and trunnions shall be rigidly secured to locking bars. Swing dogs shall have full and free movement. Top plates shall be maintained securely in place.

§ 236.336 Locking bed.

The various parts of the locking bed, locking bed supports, and tappet stop rail shall be rigidly secured in place and alined to permit free operation of locking.

§ 236.337 Locking faces of mechanical locking; fit.

Locking faces shall fit squarely against each other with a minimum engagement when locked of at least one-half the designed locking face.

§ 236.338 Mechanical locking required in accordance with locking sheet and dog chart.

Mechanical locking shall be in accordance with locking sheet and dog chart currently in effect.

§ 236.339 Mechanical locking, maintenance requirements.

Locking and connections shall be maintained so that, when a lever or latch is mechanically locked the following will be prevented:

(a) *Mechanical machine.* (1) Latch-operated locking. Raising lever latch block so that bottom thereof is within three-eighths inch of top of quadrant.

(2) Lever-operated locking. Moving lever latch block more than three-eighths inch on top of quadrant.

(b) *Electromechanical machine.* (1) Lever moving in horizontal plant. Moving lever more than five-sixteenths inch when in normal position or more than nine-sixteenths inch when in reverse position.

(2) Lever moving in arc. Moving lever more than 5 degrees.

(c) *Power machine.* (1) Latch-operated locking. Raising lever latch block to that bottom thereof is within seven thirty-seconds inch of top of quadrant.

(2) Lever moving in horizontal plane. Moving lever more than five-sixteenths inch when in normal position or more than nine-sixteenths inch when in reverse position.

(3) Lever moving in arc. Moving lever more than 5 degrees.

§ 236.340 Electromechanical interlocking machine; locking between electrical and mechanical levers.

In electro-mechanical interlocking machine, locking between electric and mechanical levers shall be maintained so that mechanical lever cannot be operated except when released by electric lever.

§ 236.341 Latch shoes, rocker links, and quadrants.

Latch shoes, rocker links, and quadrants of Saxby and farmer machines shall be maintained so that locking will not release if a downward force not exceeding a man's weight is exerted on the rocker while the lever is in the mid-stroke position.

§ 236.342 Switch circuit controller.

Switch circuit controller connected at the point to switch, derail, or movable-point frog, shall be maintained so that its contacts will not be in position corresponding to switch point closure when switch point is open one-fourth inch or more.

INSPECTION AND TESTS

§ 236.376 Mechanical locking.

Mechanical locking in interlocking machine shall be tested when new locking is installed; and thereafter when change in locking is made, or locking becomes disarranged, or tested at least once every two years, whichever shall occur first.

[49 FR 3385, Jan. 26, 1984]

§ 236.377 Approach locking.

Approach locking shall be tested when placed in service and thereafter when modified, disarranged, or at least once every two years, whichever shall occur first.

[49 FR 3385, Jan. 26, 1984]

§ 236.378 Time locking.

Time locking shall be tested when placed in service and thereafter when

modified, disarranged, or at least once every two years, whichever shall occur first.

[49 FR 3385, Jan. 26, 1984]

§ 236.379 Route locking.

Route locking or other type of switch locking shall be tested when placed in service and thereafter when modified, disarranged, or at least once every two years, whichever shall occur first.

[49 FR 3385, Jan. 26, 1984]

§ 236.380 Indication locking.

Indication locking shall be tested when placed in service and thereafter when modified, disarranged, or at least once every two years, whichever shall occur first.

[49 FR 3385, Jan. 26, 1984]

§ 236.381 Traffic locking.

Traffic locking shall be tested when placed in service and thereafter when modified, disarranged, or at least once every two years, whichever shall occur first.

[49 FR 3385, Jan. 26, 1984]

§ 236.382 Switch obstruction test.

Switch obstruction test of lock rod of each power-operated switch and lock rod of each hand-operated switch equipped with switch-and-lock-movement shall be made when lock rod is placed in service or changed out, but not less than once each month.

[49 FR 3385, Jan. 26, 1984]

§ 236.383 Valve locks, valves, and valve magnets.

Valve locks on valves of the non-cut-off type shall be tested at least once every three months, and valves and valve magnets shall be tested at least once every year.

[49 FR 3385, Jan. 26, 1984]

§ 236.384 Cross protection.

Cross protection shall be tested at least once every six months.

[49 FR 3385, Jan. 26, 1984]

§ 236.385 [Reserved]

§ 236.386 Restoring feature on power switches.

Restoring feature on power switches shall be tested at least once every three months.

§ 236.387 Movable bridge locking.

Movable bridge locking shall be tested at least once a year.

Subpart D—Traffic Control Systems

STANDARDS

§ 236.401 Automatic block signal system and interlocking standards applicable to traffic control systems.

The standards prescribed in §§ 236.201, to 236.203, inclusive, §§ 236.205, 236.206, 236.303, 236.307 and 236.309 to 236.311, inclusive, shall apply to traffic control systems.

[49 FR 3385, Jan. 26, 1984]

§ 236.402 Signals controlled by track circuits and control operator.

The control circuits for home signal aspects with indications more favorable than ''proceed at restricted speed'' shall be controlled by track circuits extending through entire block. Also in addition, at controlled point they may be controlled by control operator, and, at manually operated interlocking, they shall be controlled manually in cooperation with control operator.

§ 236.403 Signals at controlled point.

Signals at controlled point shall be so interconnected that aspects to proceed cannot be displayed simultaneously for conflicting movements, except that opposing signals may display an aspect indicating ''proceed at restricted speed'' at the same time on a track used for switching movements only, by one train at a time.

[49 FR 3386, Jan. 26, 1984]

§ 236.404 Signals at adjacent control points.

Signals at adjacent controlled points shall be so interconnected that aspects to proceed on tracks signaled for movements at greater than restricted speed

cannot be displayed simultaneously for conflicting movements.

§ 236.405 Track signaled for movements in both directions, change of direction of traffic.

On track signaled for movements in both directions, occupancy of the track between opposing signals at adjacent controlled points shall prevent changing the direction of traffic from that which obtained at the time the track became occupied, except that when a train having left one controlled point reaches a section of track immediately adjacent to the next controlled point at which switching is to be performed, an aspect permitting movement at not exceeding restricted speed may be displayed into the occupied block.

§ 236.406 [Reserved]

§ 236.407 Approach or time locking; where required.

Approach or time locking shall be provided for all controlled signals where route or direction of traffic can be changed.

[49 FR 3386, Jan. 26, 1984]

§ 236.408 Route locking.

Route locking shall be provided where switches are power-operated. Route locking shall be effective when the first pair of wheels of a locomotive or car passes a point not more than 13 feet in advance of the signal governing its movement, measured from the center of the signal mast or, if there is no mast, from the center of the signal.

[49 FR 3386, Jan. 26, 1984]

§ 236.409 [Reserved]

§ 236.410 Locking, hand-operated switch; requirements.

(a) Each hand-operated switch in main track shall be locked either electrically or mechanically in normal position, except:

(1) Where train speeds over the switch do not exceed 20 miles per hour;

(2) Where trains are not permitted to clear the main track;

(3) Where a signal is provided to govern train movements from the auxiliary track to the signaled track; or

(4) On a signaled siding without intermediate signals where the maximum authorized speed on the siding does not exceed 30 miles per hour.

(b) Approach or time locking shall be provided and locking may be released either automatically, or by the control operator, but only after the control circuits of signals governing movement in either direction over the switch and which display aspects with indications more favorable than ''proceed at restricted speed'' have been opened directly or by shunting of track circuit.

NOTE: Each carrier subject to this rule is hereby authorized to remove electrical or mechanical locks now installed within the purview of § 236.410 when either exception (1) or (2) of the present rule is satisfied, subject to the condition that the following procedures and actions be accomplished:

1. Each carrier intending to remove a lock under the findings made herein and based on the existence of one or more of the circumstances as set forth in exception (1) or (2) as contained in the revised section, shall:

(a) Notify the FRA by letter setting forth the location of the lock involved and the specific exception on which removal is based.

(b) Include in the letter to the FRA an assurance that the excepting circumstance relied upon will not be changed without either reinstallation of the electric or mechanical lock, or approval by the FRA of the changed circumstances.

(c) Publish in its Time Table the not-to-exceed 20 miles per hour speed limit covering the area of the switch, when that is the exception relied upon; or, where exception (2) is relied upon, publish either in the Special Instructions part of its Time Table or in separate printed Special Instructions the location of each hand-operated switch where electric or mechanical lock is removed and, where train movements are made in excess of twenty (20) miles per hour, concurrently issuing specific instructions, by stating therein, that trains are not to be permitted to clear the main track at such switch.

2. Following the foregoing, and upon acknowledgment of the letter to the FRA, such acknowledgment to be made promptly as an administrative action by the FRA's Bureau of Railroad Safety, and such acknowledging letter to be retained by the carrier as authority for the removal and as a record of the exception on which relied, the lock may then be removed.

(c) Where a signal is used in lieu of electric or mechanical lock to govern movements from auxiliary track to signaled track, the signal shall not display an aspect to proceed until after

the control circuits of signals governing movement on main track in either direction over the switch have been opened, and either the approach locking circuits to the switch are unoccupied or a predetermined time interval has expired.

NOTE: Railroads shall bring all hand-operated switches that are not electrically or mechanically locked and that do not conform to the requirements of this section on the effective date of this part into conformity with this section in accordance with the following schedule:

Not less than 33% during calendar year 1984.

Not less than 66% during calendar year 1985.

The remainder during calendar year 1986.

[33 FR 19684, Dec. 25, 1968, as amended at 49 FR 3386, Jan. 26, 1984]

RULES AND INSTRUCTIONS

§ 236.426 Interlocking rules and instructions applicable to traffic control systems.

The rules and instructions prescribed in §§ 236.327 and 236.328, § 236.330 to § 236.334, inclusive, and § 236.342 shall apply to traffic control systems.

INSPECTION AND TESTS

§ 236.476 Interlocking inspections and tests applicable to traffic control systems.

The inspections and tests prescribed in §§ 236.377 to 236.380, inclusive, and §§ 236.382, 236.383, and 236.386 shall apply to traffic control systems.

[49 FR 3386, Jan. 26, 1984]

Subpart E—Automatic Train Stop, Train Control and Cab Signal Systems

STANDARDS

§ 236.501 Forestalling device and speed control.

(a) An automatic train stop system may include a device by means of which the automatic application of the brakes can be forestalled.

(b) Automatic train control system shall include one or more of the following features:

(1) Low-speed restriction, requiring the train to proceed under slow speed after it has either been stopped by an automatic application of the brakes, or under control of the engineman, its speed has been reduced to slow speed, until the apparatus is automatically restored to normal because the condition which caused the restriction no longer affects the movement of the train.

(2) Medium-speed restriction, requiring the train to proceed under medium speed after passing a signal displaying an approach aspect or when approaching a signal requiring a stop, or a stop indication point, in order to prevent an automatic application of the brakes.

NOTE: Relief from the requirements of paragraphs (b) (1) and (2) of this section will be granted, insofar as speed limits fixed by definitions of Slow and Medium speeds are concerned, upon an adequate showing by an individual carrier where automatic train control systems now in service enforce speed restrictions higher than those required by definitions in §§ 236.700 to 236.838 inclusive.

(3) Maximum-speed restriction, effecting an automatic brake application whenever the predetermined maximum speed limit is exceeded.

§ 236.502 Automatic brake application, initiation by restrictive block conditions stopping distance in advance.

An automatic train-stop or train-control system shall operate to initiate an automatic brake application at least stopping distance from the entrance to a block, wherein any condition described in § 236.205 obtains, and at each main track signal requiring a reduction in speed.

§ 236.503 Automatic brake application; initiation when predetermined rate of speed exceeded.

An automatic train control system shall operate to initiate an automatic brake application when the speed of the train exceeds the predetermined rate as required by the setting of the speed control mechanism.

§ 236.504 Operation interconnected with automatic block-signal system.

(a) A continuous inductive automatic train stop or train control system shall operate in connection with an automatic block signal system and shall be

so interconnected with the signal system as to perform its intended function in event of failure of the engineer to acknowledge or obey a restrictive wayside signal or a more restrictive cab signal.

(b) An intermittent inductive automatic train stop system shall operate in connection with an automatic block signal system and shall be so interconnected with the signal system that the failure of the engineer to acknowledge a restrictive wayside signal will cause the intermittent inductive automatic train stop system to perform its intended function.

[49 FR 3386, Jan. 26, 1984]

§ 236.505 Proper operative relation between parts along roadway and parts on locomotive.

Proper operative relation between the parts along the roadway and the parts on the locomotive shall obtain under all conditions of speed, weather, wear, oscillation, and shock.

§ 236.506 Release of brakes after automatic application.

The automatic train stop or train control apparatus shall prevent release of the brakes after automatic application until a reset device has been operated, or the speed of the train has been reduced to a predetermined rate, or the condition that caused the brake application no longer affects the movement of the train. If reset device is used it shall be arranged so that the brakes cannot be released until the train has been stopped, or it shall be located so that it cannot be operated by engineman without leaving his accustomed position in the cab.

§ 236.507 Brake application; full service.

The automatic train stop or train control apparatus shall, when operated, cause a full service application of the brakes.

§ 236.508 Interference with application of brakes by means of brake valve.

The automatic train stop, train control, or cab signal apparatus shall be so arranged as not to interfere with the application of the brakes by means of the brake valve and not to impair the efficiency of the brake system.

[49 FR 3386, Jan. 26, 1984]

§ 236.509 Two or more locomotives coupled.

The automatic train stop, train control or cab signal apparatus shall be arranged so that when two or more locomotives are coupled, or a pushing or helping locomotive is used, it can be made operative only on the locomotive from which the brakes are controlled.

§ 236.510 [Reserved]

§ 236.511 Cab signals controlled in accordance with block conditions stopping distance in advance.

The automatic cab signal system shall be arranged so that cab signals will be continuously controlled in accordance with conditions described in § 236.205 that obtain at least stopping distance in advance.

§ 236.512 Cab signal indication when locomotive enters block where restrictive conditions obtain.

The automatic cab signal system shall be arranged so that when a locomotive enters or is within a block, wherein any condition described in § 236.205 obtains, the cab signals shall indicate ''Proceed at Restricted Speed.''

§ 236.513 Audible indicator.

(a) The automatic cab signal system shall be so arranged that when the cab signal changes to display a more restrictive aspect, an audible indicator will sound continuously until silenced by manual operation of an acknowledging device.

(b) The audible cab indicator of automatic cab signal, automatic train stop, or automatic train control system shall have a distinctive sound and be clearly audible throughout the cab under all operating conditions.

[49 FR 3386, Jan. 26, 1984]

§ 236.514 Interconnection of cab signal system with roadway signal system.

The automatic cab signal system shall be interconnected with the roadway-signal system so that the cab signal indication will not authorize operation of the train at a speed higher than that authorized by the indication of the roadway signal that governed the movement of a train into a block except when conditions affecting movement of trains in the block change after the train passes the signal.

§ 236.515 Visibility of cab signals.

The cab signals shall be plainly visible to member or members of the locomotive crew from their stations in the cab.

[49 FR 3386, Jan. 26, 1984]

§ 236.516 Power supply.

Automatic cab signal, train stop, or train control device hereafter installed shall operate from a separate or isolated power supply.

[49 FR 3386, Jan. 26, 1984]

RULES AND INSTRUCTIONS; ROADWAY

§ 236.526 Roadway element not functioning properly.

When a roadway element except track circuit of automatic train stop, train control or cab signal system is not functioning as intended, the signal associated with such roadway element shall be caused manually to display its most restrictive aspect until such element has been restored to normal operative condition.

§ 236.527 Roadway element insulation resistance.

Insulation resistance between roadway inductor and ground shall be maintained at not less than 10,000 ohms.

[49 FR 3386, Jan. 26, 1984]

§ 236.528 Restrictive condition resulting from open hand-operated switch; requirement.

When a facing point hand-operated switch is open one-fourth inch or more, a trailing point hand-operated switch three-eighths inch or more, or hand-operated switch is not locked where facing point lock with circuit controller is used, the resultant restrictive condition of an automatic train stop or train control device of the continuous type or the resultant restrictive cab signal indication of an automatic cab signal device on an approaching locomotive shall be maintained to within 300 feet of the points of the switch.

§ 236.529 Roadway element inductor; height and distance from rail.

Inductor of the inert roadway element type shall be maintained with the inductor pole faces at a height above the plane of the tops of the rails, and with its inner edge at a hmrizontal distance from the gage side of the nearest running rail, in accordance with specifications of the carrier.

[49 FR 3386, Jan. 26, 1984]

§ 236.530 [Reserved]

§ 236.531 Trip arm; height and distance from rail.

Trip arm of automatic train stop device when in the stop position shall be maintained at a height above the plane of the tops of the rails, and at a horizontal distance from its center line to gage side of the nearest running rail, in accordance with specifications of the carrier.

[49 FR 3386, Jan. 26, 1984]

§ 236.532 Strap iron inductor; use restricted.

No railroad shall use strap iron inductor or other roadway element with characteristics differing from its standard type on track where speed higher than restricted speed is permitted.

[49 FR 3386, Jan. 26, 1984]

§ 236.533 [Reserved]

§ 236.534 Entrance to equipped territory; requirements.

Where trains are not required to stop at the entrance to equipped territory, except when leaving yards and stations and speed until entering equipped territory does not exceed restricted speed, the automatic train stop, train control, or cab signal device shall be operative

at least stopping distance from the entrance to such territory except where the approach thereto is governed by automatic approach signal.

RULES AND INSTRUCTIONS; LOCOMOTIVES

§ 236.551 Power supply voltage; requirement.

The voltage of power supply shall be maintained within 10 percent of rated voltage.

§ 236.552 Insulation resistance; requirement.

When periodic test prescribed in § 236.588 is performed, insulation resistance between wiring and ground of continuous inductive automatic cab signal system, automatic train control system, or automatic train stop system shall be not less than one megohm, and that of an intermittent inductive automatic train stop system, not less than 250,000 ohms. Insulation resistance values between periodic tests shall be not less than 250,000 ohms for a continuous inductive automatic cab signal system, automatic train control system, or automatic train stop system, and 20,000 ohms for an intermittent inductive automatic train stop system.

[49 FR 3387, Jan. 26, 1984]

§ 236.553 Seal, where required.

Seal shall be maintained on any device other than brake-pipe cut-out cock (double-heading cock), by means of which the operation of the pneumatic portion of automatic train-stop or train-control apparatus can be cut out.

§ 236.554 Rate of pressure reduction; equalizing reservoir or brake pipe.

The equalizing-reservoir pressure or brake-pipe pressure reduction during an automatic brake application shall be at a rate not less than that which results from a manual service application.

§ 236.555 Repaired or rewound receiver coil.

Receiver coil which has been repaired or rewound shall have the same operating characteristics which it possessed originally or as currently specified for new equipment.

§ 236.556 Adjustment of relay.

Change in adjustment of relay shall be made only in a shop equipped for that purpose except when receiver coils, electro-pneumatic valve, or other essential part of the equipment is replaced. Irregularities in power-supply voltage or other variable factors in the circuit shall not be compensated for by adjustment of the relay.

§ 236.557 Receiver; location with respect to rail.

(a) Receiver of intermittent inductive automatic train stop device of the inert roadway element type shall be maintained with bottom of the receiver at a height above the plane of the tops of the rails, and with its outer edge at a horizontal distance from the gage side of the nearest rail, in accordance with specifications of the carrier.

(b) Receiver of continuous inductive automatic cab signal, train stop, or train control device of locomotive equipped with onboard test equipment, shall be maintained with the bottom of the receiver at a height above the plane of the tops of the rails, and with its outer edge at a horizontal distance from the gage side of the nearest rail, in accordance with specifications of the carrier.

[49 FR 3387, Jan. 26, 1984]

§§ 236.558–236.559 [Reserved]

§ 236.560 Contact element, mechanical trip type; location with respect to rail.

Contact element of automatic train stop device of the mechanical trip type shall be maintained at a height above the plane of the tops of the rails, and at a horizontal distance from the gage side of the rail, in accordance with specifications of the carrier.

[49 FR 3387, Jan. 26, 1984]

§ 236.561 [Reserved]

§ 236.562 Minimum rail current required.

The minimum rail current required to restore the locomotive equipment of continuous inductive automatic train stop or train control device to normal

condition or to obtain a proceed indication of automatic cab signal device (pick-up) shall be in accordance with specifications of the carrier.

[49 FR 3387, Jan. 26, 1984]

§ 236.563 Delay time.

Delay time of automatic train stop or train control system shall not exceed 8 seconds and the spacing of signals to meet the requirements of § 236.24 shall take into consideration the delay time.

§ 236.564 Acknowledging time.

Acknowledging time of intermittent automatic train-stop device shall be not more than 30 seconds.

§ 236.565 Provision made for preventing operation of pneumatic brake-applying apparatus by double-heading cock; requirement.

Where provision is made for preventing the operation of the pneumatic brake-applying appartus of an automatic train stop or train control device when the double-heading cock is placed in double-heading position, the automatic train stop or train control device shall not be cut out before communication is closed between the engineman's automatic brake valve and the brake pipe, when operating double-heading cock toward double-heading position.

§ 236.566 Locomotive of each train operating in train stop, train control or cab signal territory; equipped.

The locomotive from which brakes are controlled, of each train operating in automatic train stop, train control, or cab signal territory shall be equipped with apparatus responsive to the roadway equipment installed on all or any part of the route traversed, and such apparatus shall be in operative condition.

§ 236.567 Restrictions imposed when device fails and/or is cut out en route.

Where an automatic train stop, train control, or cab signal device fails and/or is cut out enroute, train may proceed at restricted speed or if an automatic block signal system is in operation according to signal indication but not to exceed medium speed, to the next available point of communication where report must be made to a designated officer. Where no automatic block signal system is in use train shall be permitted to proceed at restricted speed or where automatic block signal system is in operation according to signal indication but not to exceed medium speed to a point where absolute block can be established. Where an absolute block is established in advance of the train on which the device is inoperative train may proceed at not to exceed 79 miles per hour.

§ 236.568 Difference between speeds authorized by roadway signal and cab signal; action required.

If for any reason a cab signal authorizes a speed different from that authorized by a roadway signal, when a train enters the block governed by such roadway signal, the lower speed shall not be exceeded.

INSPECTION AND TESTS; ROADWAY

§ 236.576 Roadway element.

Roadway elements, except track circuits, including those for test purposes, shall be gaged monthly for height and alinement, and shall be tested at least every 6 months.

§ 236.577 Test, acknowledgement, and cut-in circuits.

Test, acknowledgement, and cut-in circuits shall be tested at least once every twelve months.

[49 FR 3387, Jan. 26, 1984]

INSPECTION AND TESTS; LOCOMOTIVE

§ 236.586 Daily or after trip test.

(a) Except where tests prescribed by § 236.588 are performed at intervals of not more than 2 months, each locomotive equipped with an automatic cab signal or train stop or train control device operating in equipped territory shall be inspected for damage to the equipment and tested at least once each calendar day or within 24 hours before departure upon each trip.

(b) Each equipped locomotive shall be tested to determine the locomotive equipment is responsive to the wayside equipment and shall be cycled to determine the device functions as intended.

(c) Each locomotive equipped with intermittent inductive automatic train stop or non-coded continuous inductive automatic train stop or non-coded continuous inductive automatic train control device shall be tested to determine that the pickup of the device is within specified limits.

[49 FR 3387, Jan. 26, 1984]

§ 236.587 Departure test.

(a) The automatic train stop, train control, or cab signal apparatus on each locomotive, except a locomotive or a multiple-unit car equipped with mechanical trip stop, shall be tested using one of the following methods:

(1) Operation over track elements;

(2) Operation over test circuit;

(3) Use of portable test equipment; or

(4) Use of onboard test device.

(b) The test shall be made on departure of the locomotive from its initial terminal unless that apparatus will be cut out between the initial terminal and the equipped territory. If the apparatus is cut out between the initial terminal and the equipped territory the test shall be made prior to entering equipped territory.

(c) If a locomotive makes more than one trip in any 24-hour period, only one departure test is required in such 24-hour period.

(d)(1) Whoever performs the test shall certify in writing that such test was properly performed. The certification and the test results shall be posted in the cab of the locomotive and a copy of the certification and test results left at the test location for filing in the office of the supervisory official having jurisdiction.

(2) If it is impractical to leave a copy of the certification and test results at the location of the test, the test results shall be transmitted to either (i) the dispatcher or (ii) one other designated individual at each location, who shall keep a written record of the test results and the name of the person performing the test. These records shall be retained for at least 92 days.

[49 FR 3387, Jan. 26, 1984, as amended at 53 FR 37313, Sept. 26, 1988]

EFFECTIVE DATE NOTE: At 49 FR 3387, Jan. 26, 1984, § 236.587 was revised. This section contains information collection and recordkeeping requirements and will not become effective until approval has been given by the Office of Management and Budget.

§ 236.588 Periodic test.

Except as provided in § 236.586, periodic test of the automatic train stop, train control, or cab signal apparatus shall be made at least once every 92 days, and on multiple-unit cars as specified by the carrier, subject to approval by the FRA.

[49 FR 3387, Jan. 26, 1984]

§ 236.589 Relays.

(a) Each relay shall be removed from service, subjected to thorough test, necessary repairs and adjustments made, and shall not be replaced in service unless its operating characteristics are in accordance with the limits within which such relay is designed to operate, as follows:

(1) Master or primary relays of torque type depending on spring tension to return contacts to deenergized position in noncoded continuous inductive automatic train stop or train control system, at least once every two years; and

(2) All other relays, at least once every six years.

(b) [Reserved]

[49 FR 3387, Jan. 26, 1984]

§ 236.590 Pneumatic apparatus.

Automatic train stop, train control, or cab signal pneumatic apparatus shall be inspected, cleaned, and the results of such inspection recorded as provided by § 229.29(a). When a locomotive with automatic train stop, train control, or cab signal pneumatic apparatus receives out-of-use credit pursuant to § 229.33, the automatic train stop, train control, or cab signal apparatus shall be tested in accordance with § 236.588 prior to the locomotive being placed in service.

[61 FR 33873, July 1, 1996]

Subpart F—Dragging Equipment and Slide Detectors and Other Similar Protective Devices

STANDARDS

§ 236.601 Signals controlled by devices; location.

Signals controlled by devices used to provide protection against unusual contingencies, such as landslides, dragging equipment, burned bridges or trestles and washouts shall be located so that stopping distance will be provided between the signal and the point where it is necessary to stop the train.

Subpart G—Definitions

§ 236.700 Definitions.

For the purpose of these rules, standards, and instructions, the following definitions will apply.

§ 236.701 Application, brake; full service.

An application of the brakes resulting from a continuous or a split reduction in brake pipe pressure at a service rate until maximum brake cylinder pressure is developed. As applied to an automatic or electro-pneumatic brake with speed governor control, an application other than emergency which develops the maximum brake cylinder pressure, as determined by the design of the brake equipment for the speed at which the train is operating.

§ 236.702 Arm, semaphore.

The part of a semaphore signal displaying an aspect. It consists of a blade fastened to a spectacle.

§ 236.703 Aspect.

The appearance of a roadway signal conveying an indication as viewed from the direction of an approaching train; the appearance of a cab signal conveying an indication as viewed by an observer in the cab.

§ 236.704 [Reserved]

§ 236.705 Bar, locking.

A bar in an interlocking machine to which the locking dogs are attached.

§ 236.706 Bed, locking.

That part of an interlocking machine that contains or holds the tappets, locking bars, crosslocking, dogs and other apparatus used to interlock the levers.

§ 236.707 Blade, semaphore.

The extended part of a semaphore arm which shows the position of the arm.

§ 236.708 Block.

A length of track of defined limits, the use of which by trains is governed by block signals, cab signals, or both.

§ 236.709 Block, absolute.

A block in which no train is permitted to enter while it is occupied by another train.

§ 236.710 Block, latch.

The lower extremity of a latch rod which engages with a square shoulder of the segment or quadrant to hold the lever in position.

§ 236.711 Bond, rail joint.

A metallic connection attached to adjoining rails to insure electrical conductivity.

§ 236.712 Brake pipe.

A pipe running from the engineman's brake valve through the train, used for the transmission of air under pressure to charge and actuate the automatic brake equipment and charge the reservoirs of the electro-pneumatic brake equipment on each vehicle of the train.

§ 236.713 Bridge, movable.

That section of a structure bridging a navigable waterway so designed that it may be displaced to permit passage of traffic on the waterway.

§ 236.714 Cab.

The compartment of a locomotive from which the propelling power and power brakes of the train are manually controlled.

§§ 236.715–236.716 [Reserved]

§ 236.717 Characteristics, operating.

The measure of electrical values at which electrical or electronic apparatus operate (e.g., drop-away, pick-up, maximum and minimum current, and working value).

[49 FR 3387, Jan. 26, 1984]

§ 236.718 Chart, dog.

A diagrammatic representation of the mechanical locking of an interlocking machine, used as a working plan in making up, assembling and fitting the locking.

§ 236.719 Circuit, acknowledgment.

A circuit consisting of wire or other conducting material installed between the track rails at each signal in territory where an automatic train stop system or cab signal system of the continuous inductive type with 2-indication cab signals is in service, to enforce acknowledgement by the engineman at each signal displaying an aspect requiring a stop.

§ 236.720 Circuit, common return.

A term applied where one wire is used for the return of more than one electric circuit.

§ 236.721 Circuit, control.

An electrical circuit between a source of electric energy and a device which it operates.

§ 236.722 Circuit, cut-in.

A roadway circuit at the entrance to automatic train stop, train control or cab signal territory by means of which locomotive equipment of the continuous inductive type is actuated so as to be in operative condition.

§ 236.723 Circuit, double wire; line.

An electric circuit not employing a common return wire; a circuit formed by individual wires throughout.

§ 236.724 Circuit, shunt fouling.

The track circuit in the fouling section of a turnout, connected in multiple with the track circuit in the main track.

§ 236.725 Circuit, switch shunting.

A shunting circuit which is closed through contacts of a switch circuit controller.

§ 236.726 Circuit, track.

An electrical circuit of which the rails of the track form a part.

§ 236.727 Circuit, track; coded.

A track circuit in which the energy is varied or interrupted periodically.

§ 236.728 Circuit, trap.

A term applied to a circuit used where it is desirable to provide a track circuit but where it is impracticable to maintain a track circuit.

§ 236.729 Cock, double heading.

A manually operated valve by means of which the control of brake operation is transferred to the leading locomotive.

§ 236.730 Coil, receiver.

Concentric layers of insulated wire wound around the core of a receiver of an automatic train stop, train control or cab signal device on a locomotive.

§ 236.731 Controller, circuit.

A device for opening and closing electric circuits.

§ 236.732 Controller, circuit; switch.

A device for opening and closing electric circuits, operated by a rod connected to a switch, derail or movable-point frog.

§ 236.733 Current, foreign.

A term applied to stray electric currents which may affect a signaling system, but which are not a part of the system.

§ 236.734 Current of traffic.

The movement of trains on a specified track in a designated direction.

§ 236.735 Current, leakage.

A stray electric current of relatively small value which flows through or across the surface of insulation when a voltage is impressed across the insulation.

§ 236.736 Cut-section.

A location other than a signal location where two adjoining track circuits end within a block.

§ 236.737 Cut-section, relayed.

A cut-section where the energy for one track circuit is supplied through front contacts or through front and polar contacts of the track relay for the adjoining track circuit.

§ 236.738 Detector, point.

A circuit controller which is part of the switch operating mechanism and operated by a rod connected to a switch, derail or movable point frog to indicate that the point is within a specified distance of the stock rail.

§ 236.739 Device, acknowledging.

A manually operated electric switch or pneumatic valve by means of which, on a locomotive equipped with an automatic train stop or train control device, an automatic brake application can be forestalled, or by means of which, on a locomotive equipped with an automatic cab signal device, the sounding of the cab indicator can be silenced.

§ 236.740 Device, reset.

A device whereby the brakes may be released after an automatic train control brake application.

§ 236.741 Distance, stopping.

The maximum distance on any portion of any railroad which any train operating on such portion of railroad at its maximum authorized speed, will travel during a full service application of the brakes, between the point where such application is initiated and the point where the train comes to a stop.

§ 236.742 Dog, locking.

A steel block attached to a locking bar or tappet of an interlocking machine, by means of which locking between levers is accomplished.

§ 236.743 Dog, swing.

A locking dog mounted in such a manner that it is free to rotate on a trunnion which is riveted to a locking bar.

CROSS REFERENCE: Element, contact. See receiver, § 236.788.

§ 236.744 Element, roadway.

That portion of the roadway apparatus of automatic train stop, train control, or cab signal system, such as electric circuit, inductor, or trip arm to which the locomotive apparatus of such system is directly responsive.

[49 FR 3387, Jan. 26, 1984]

§ 236.745 Face, locking.

The locking surface of a locking dog, tappet or cross locking of an interlocking machine.

§ 236.746 Feature, restoring.

An arrangement on an electro-pneumatic switch by means of which power is applied to restore the switch movement to full normal or to full reverse position, before the driving bar creeps sufficiently to unlock the switch, with control level in normal or reverse position.

[49 FR 3388, Jan. 26, 1984]

§ 236.747 Forestall.

As applied to an automatic train stop or train control device, to prevent an automatic brake application by operation of an acknowledging device or by manual control of the speed of the train.

§ 236.748 [Reserved]

§ 236.749 Indication.

The information conveyed by the aspect of a signal.

CROSS REFERENCE: Inductor, see § 236.744.

§ 236.750 Interlocking, automatic.

An arrangement of signals, with or without other signal appliances, which functions through the exercise of inherent powers as distinguished from those whose functions are controlled manually, and which are so interconnected by means of electric circuits that their movements must succeed each other in proper sequence, train movements over all routes being governed by signal indication.

§ 236.751 Interlocking, manual.

An arrangement of signals and signal appliances operated from an interlocking machine and so interconnected by means of mechanical and/or electric locking that their movements must succeed each other in proper sequence, train movements over all routes being governed by signal indication.

§ 236.752 Joint, rail, insulated.

A joint in which electrical insulation is provided between adjoining rails.

§ 236.753 Limits, interlocking.

The tracks between the opposing home signals of an interlocking.

§ 236.754 Line, open wire.

An overhead wire line consisting of single conductors as opposed to multiple-conductor cables.

§ 236.755 Link, rocker.

That portion of an interlocking machine which transmits motion between the latch and the universal link.

§ 236.756 Lock, bolt.

A mechanical lock so arranged that if a switch, derail or movable-point frog is not in the proper position for a train movement, the signal governing that movement cannot display an aspect to proceed; and that will prevent a movement of the switch, derail or movable-point frog unless the signal displays its most restrictive aspect.

§ 236.757 Lock, electric.

A device to prevent or restrict the movement of a lever, a switch or a movable bridge, unless the locking member is withdrawn by an electrical device, such as an electromagnet, solenoid or motor.

§ 236.758 Lock, electric, forced drop.

An electric lock in which the locking member is mechanically forced down to the locked position.

§ 236.759 Lock, facing point.

A mechanical lock for a switch, derail, or movable-point frog, comprising a plunger stand and a plunger which engages a lock rod attached to the switch point to lock the operated unit.

§ 236.760 Locking, approach.

Electric locking effective while a train is approaching, within a specified distance, a signal displaying an aspect to proceed, and which prevents, until after the expiration of a predetermined time interval after such signal has been caused to display its most restrictive aspect, the movement of any interlocked or electrically locked switch, movable-point frog, or derail in the route governed by the signal, and which prevents an aspect to proceed from being displayed for any conflicting route.

§ 236.761 Locking, electric.

The combination of one or more electric locks and controlling circuits by means of which levers of an interlocking machine, or switches or other units operated in connection with signaling and interlocking, are secured against operation under certain conditions.

§ 236.762 Locking, indication.

Electric locking which prevents manipulation of levers that would result in an unsafe condition for a train movement if a signal, switch, or other operative unit fails to make a movement corresponding to that of its controlling lever, or which directly prevents the operation of a signal, switch, or other operative unit, in case another unit which should operate first fails to make the required movement.

§ 236.763 Locking, latch operated.

The mechanical locking of an interlocking machine which is actuated by means of the lever latch.

§ 236.764 Locking, lever operated.

The mechanical locking of an interlocking machine which is actuated by means of the lever.

§ 236.765 Locking, mechanical.

An arrangement of locking bars, dogs, tappets, cross locking and other apparatus by means of which interlocking is effected between the levers of an interlocking machine and so interconnected that their movements must succeed each other in a predetermined order.

§ 236.766 Locking, movable bridge.

The rail locks, bridge locks, bolt locks, circuit controllers, and electric locks used in providing interlocking protection at a movable bridge.

§ 236.767 Locking, route.

Electric locking, effective when a train passes a signal displaying an aspect for it to proceed, which prevents the movement of any switch, movable-point frog, or derail in advance of the train within the route entered. It may be so arranged that as a train clears a track section of the route, the locking affecting that section is released.

§ 236.768 Locking, time.

A method of locking, either mechanical or electrical, which, after a signal has been caused to display an aspect to proceed, prevents, until after the expiration of a predetermined time interval after such signal has been caused to display its most restrictive aspect, the operation of any interlocked or electrically locked switch, movable-point frog, or derail in the route governed by that signal, and which prevents an aspect to proceed from being displayed for any conflicting route.

§ 236.769 Locking, traffic.

Electric locking which prevents the manipulation of levers or other devices for changing the direction of traffic on a section of track while that section is occupied or while a signal displays an aspect for a movement to proceed into that section.

§ 236.770 Locomotive.

A self-propelled unit of equipment which can be used in train service.

§ 236.771 Machine, control.

An assemblage of manually operated devices for controlling the functions of a traffic control system; it may include a track diagram with indication lights.

§ 236.772 Machine, interlocking.

An assemblage of manually operated levers or other devices for the control of signals, switches or other units.

CROSS REFERENCE: Magnet, track, see § 236.744.

§ 236.773 Movements, conflicting.

Movements over conflicting routes.

§ 236.774 Movement, facing.

The movement of a train over the points of a switch which face in a direction opposite to that in which the train is moving.

§ 236.775 Movement, switch-and-lock.

A device, the complete operation of which performs the three functions of unlocking, operating and locking a switch, movable-point frog or derail.

§ 236.776 Movement, trailing.

The movement of a train over the points of a switch which face in the direction in which the train is moving.

§ 236.777 Operator, control.

An employee assigned to operate the control machine of a traffic control system.

§ 236.778 Piece, driving.

A crank secured to a locking shaft by means of which horizontal movement is imparted to a longitudinal locking bar.

§ 236.779 Plate, top.

A metal plate secured to a locking bracket to prevent the cross locking from being forced out of the bracket.

§ 236.780 Plunger, facing point lock.

That part of a facing point lock which secures the lock rod to the plunger stand when the switch is locked.

§ 236.781 [Reserved]

§ 236.782 Point, controlled.

A location where signals and/or other functions of a traffic control system are controlled from the control machine.

§ 236.783 Point, stop-indication.

As applied to an automatic train stop or train control system without the use of roadway signals, a point where a signal displaying an aspect requiring a stop would be located.

§ 236.784 Position, deenergized.

The position assumed by the moving member of an electromagnetic device when the device is deprived of its operating current.

§ 236.785 Position, false restrictive.

A position of a semaphore arm that is more restrictive than it should be.

§ 236.786 Principle, closed circuit.

The principle of circuit design where a normally energized electric circuit which, on being interrupted or deenergized, will cause the controlled function to assume its most restrictive condition.

§ 236.787 Protection, cross.

An arrangement to prevent the improper operation of a signal, switch, movable-point frog, or derail as the result of a cross in electrical circuits.

CROSS REFERENCE: Ramp, see § 236.744.

§ 236.787a Railroad.

Railroad means any form of nonhighway ground transportation that runs on rails or electromagnetic guideways and any entity providing such transportation, including—

(a) Commuter or other short-haul railroad passenger service in a metropolitan or suburban area and commuter railroad service that was operated by the Consolidated Rail Corporation on January 1, 1979; and

(b) High speed ground transportation systems that connect metropolitan areas, without regard to whether those systems use new technologies not associated with traditional railroads; but does not include rapid transit operations in an urban area that are not connected to the general railroad system of transportation.

[70 FR 11095, Mar. 7, 2005]

§ 236.788 Receiver.

A device on a locomotive, so placed that it is in position to be influenced inductively or actuated by an automatic train stop, train control or cab signal roadway element.

§ 236.789 Relay, timing.

A relay which will not close its front contacts or open its back contacts, or both, until the expiration of a definite time intervals after the relay has been energized.

§ 236.790 Release, time.

A device used to prevent the operation of an operative unit until after the expiration of a predetermined time interval after the device has been actuated.

§ 236.791 Release, value.

The electrical value at which the movable member of an electromagnetic device will move to its deenergized portion.

§ 236.792 Reservoir, equalizing.

An air reservoir connected with and adding volume to the top portion of the equalizing piston chamber of the automatic brake valve, to provide uniform service reductions in brake pipe pressure regardless of the length of the train.

CROSS REFERENCE: Rocker, see § 236.755.

§ 236.793 Rod, lock.

A rod, attached to the front rod or lug of a switch, movable-point frog or derail, through which a locking plunger may extend when the switch points or derail are in the normal or reverse position.

§ 236.794 Rod, up-and-down.

A rod used for connecting the semaphore arm to the operating mechanism of a signal.

§ 236.795 Route.

The course or way which is, or is to be, traveled.

§ 236.796 Routes, conflicting.

Two or more routes, opposing, converging or intersecting, over which movements cannot be made simultaneously without possibility of collision.

§ 236.797 Route, interlocked.

A route within interlocking limits.

§ 236.798 Section, dead.

A section of track, either within a track circuit or between two track circuits, the rails of which are not part of a track circuit.

§ 236.799 Section, fouling.

The section of track between the switch points and the clearance point in a turnout.

§ 236.800 Sheet, locking.

A description in tabular form of the locking operations in an interlocking machine.

§ 236.801 Shoe, latch.

The casting by means of which the latch rod and the latch block are held to a lever of a mechanical interlocking machine.

§ 236.802 Shunt.

A by-path in an electrical circuit.

§ 236.802a Siding.

An auxiliary track for meeting or passing trains.

§ 236.803 Signal, approach.

A roadway signal used to govern the approach to another signal and if operative so controlled that its indication furnishes advance information of the indication of the next signal.

§ 236.804 Signal, block.

A roadway signal operated either automatically or manually at the entrance to a block.

§ 236.805 Signal, cab.

A signal located in engineman's compartment or cab, indicating a condition affecting the movement of a train and used in conjunction with interlocking signals and in conjunction with or in lieu of block signals.

§ 236.806 Signal, home.

A roadway signal at the entrance to a route or block to govern trains in entering and using that route or block.

§ 236.807 Signal, interlocking.

A roadway signal which governs movements into or within interlocking limits.

§ 236.808 Signals, opposing.

Roadway signals which govern movements in opposite directions on the same track.

§ 236.809 Signal, slotted mechanical.

A mechanically operated signal with an electromagnetic device inserted in its operating connection to provide a means of controlling the signal electrically, as well as mechanically.

§ 236.810 Spectacle, semaphore arm.

That part of a semaphore arm which holds the roundels and to which the blade is fastened.

§ 236.811 Speed, medium.

A speed not exceeding 40 miles per hour.

§ 236.812 Speed, restricted.

A speed that will permit stopping within one-half the range of vision, but not exceeding 20 miles per hour.

[49 FR 3388, Jan. 26, 1984]

§ 236.813 Speed, slow.

A speed not exceeding 20 miles per hour.

§ 236.813a State, most restrictive.

The mode of an electric or electronic device that is equivalent to a track relay in its deenergized position.

[49 FR 3388, Jan. 26, 1984]

§ 236.814 Station, control.

The place where the control machine of a traffic control system is located.

§ 236.815 Stop.

As applied to mechanical locking, a device secured to a locking bar to limit its movement.

§ 236.816 Superiority of trains.

The precedence conferred upon one train over other trains by train order or by reason of its class or the direction of its movement.

§ 236.817 Switch, electro-pneumatic.

A switch operated by an electro-pneumatic switch-and-lock movement.

§ 236.818 Switch, facing point.

A switch, the points of which face traffic approaching in the direction for which the track is signaled.

§ 236.819 Switch, hand operated.

A non-interlocked switch which can only be operated manually.

§ 236.820 Switch, interlocked.

A switch within the interlocking limits the control of which is interlocked with other functions of the interlocking.

§ 236.820a Switch, power-operated.

A switch operated by an electrically, hydraulically, or pneumatically driven switch-and-lock movement.

[49 FR 3388, Jan. 26, 1984]

§ 236.821 Switch, sectionalizing.

A switch for disconnecting a section of a power line from the source of energy.

§ 236.822 Switch, spring.

A switch equipped with a spring device which forces the points to their original position after being trailed through and holds them under spring compression.

§ 236.823 Switch, trailing point.

A switch, the points of which face away from traffic approaching in the direction for which the track is signaled.

§ 236.824 System, automatic block signal.

A block signal system wherein the use of each block is governed by an automatic block signal, cab signal, or both.

§ 236.825 System, automatic train control.

A system so arranged that its operation will automatically result in the following:

(a) A full service application of the brakes which will continue either until the train is brought to a stop, or, under control of the engineman, its speed is reduced to a predetermined rate.

(b) When operating under a speed restriction, an application of the brakes when the speed of the train exceeds the predetermined rate and which will continue until the speed is reduced to that rate.

§ 236.826 System, automatic train stop.

A system so arranged that its operation will automatically result in the application of the brakes until the train has been brought to a stop.

§ 236.827 System, block signal.

A method of governing the movement of trains into or within one or more blocks by block signals or cab signals.

§ 236.828 System, traffic control.

A block signal system under which train movements are authorized by block signals whose indications supersede the superiority of trains for both opposing and following movements on the same track.

§ 236.829 Terminal, initial.

The starting point of a locomotive for a trip.

§ 236.830 Time, acknowledging.

As applied to an intermittent automatic train stop system, a predetermined time within which an automatic brake application may be forestalled by means of the acknowledging device.

§ 236.831 Time, delay.

As applied to an automatic train stop or train control system, the time which elapses after the onboard apparatus detects a more restrictive indication until the brakes start to apply.

[49 FR 3388, Jan. 26, 1984]

§ 236.831a Track, main.

A track, other than auxiliary track, extending through yards and between stations, upon which trains are operated by timetable or train orders, or both, or the use of which is governed by block signals.

§ 236.832 Train.

A locomotive or more than one locomotive coupled, with or without cars.

§ 236.833 Train, opposing.

A train, the movement of which is in a direction opposite to and toward another train on the same track.

§ 236.834 Trip.

A movement of a locomotive over all or any portion of automatic train stop, train control or cab signal territory between the terminals for that locomotive; a movement in one direction.

CROSS REFERENCE: Trip-arm, see § 236.744.

§ 236.835 Trunking.

A casing used to protect electrical conductors.

§ 236.836 Trunnion.

A cylindrical projection supporting a revolving part.

§ 236.837 Valve, electro-pneumatic.

A valve electrically operated which, when operated, will permit or prevent passage of air.

§ 236.838 Wire, shunt.

A wire forming part of a shunt circuit.

Subpart H—Standards for Processor-Based Signal and Train Control Systems

SOURCE: 70 FR 11095, Mar. 7, 2005, unless otherwise noted.

§ 236.901 Purpose and scope.

(a) *What is the purpose of this subpart?* The purpose of this subpart is to promote the safe operation of processor-based signal and train control systems, subsystems, and components that are safety-critical products, as defined in § 236.903, and to facilitate the development of those products.

(b) *What topics does it cover?* This subpart prescribes minimum, performance-based safety standards for safety-critical products, including requirements to ensure that the development, installation, implementation, inspection, testing, operation, maintenance, repair, and modification of those products will achieve and maintain an acceptable level of safety. This subpart also prescribes standards to ensure that personnel working with safety-critical products receive appropriate training. Each railroad may prescribe additional or more stringent rules, and other special instructions, that are not inconsistent with this subpart.

(c) *What other rules apply?* (1) This subpart does not exempt a railroad from compliance with the requirements of subparts A through G of this part, except to the extent a PSP explains to FRA Associate Administrator for Safety's satisfaction the following:

(i) How the objectives of any such requirements are met by the product;

(ii) Why the objectives of any such requirements are not relevant to the product; or

(iii) How the requirement is satisfied using alternative means. (See § 236.907(a)(14)).

(2) Products subject to this subpart are also subject to applicable requirements of parts 233, 234 and 235 of this chapter. See § 234.275 of this chapter with respect to use of this subpart to qualify certain products for use within highway-rail grade crossing warning systems.

(3) Information required to be submitted by this subpart that a submitter deems to be trade secrets, or commercial or financial information that is privileged or confidential under Exemption 4 of the Freedom of Information Act, 5 U.S.C. 552(b)(4), shall be so labeled in accordance with the provisions of § 209.11 of this chapter. FRA handles information so labeled in accordance with the provisions of § 209.11 of this chapter.

§ 236.903 Definitions.

As used in this subpart—

Associate Administrator for Safety means the Associate Administrator for Safety, FRA, or that person's delegate as designated in writing.

Component means an element, device, or appliance (including those whose nature is electrical, mechanical, hardware, or software) that is part of a system or subsystem.

Configuration management control plan means a plan designed to ensure that the proper and intended product configuration, including the hardware components and software version, is

documented and maintained through the life-cycle of the products in use.

Employer means a railroad, or contractor to a railroad, that directly engages or compensates individuals to perform the duties specified in § 236.921 (a).

Executive software means software common to all installations of a given product. It generally is used to schedule the execution of the site-specific application programs, run timers, read inputs, drive outputs, perform self-diagnostics, access and check memory, and monitor the execution of the application software to detect unsolicited changes in outputs.

FRA means the Federal Railroad Administration.

Full automatic operation means that mode of an automatic train control system capable of operating without external human influence, in which the locomotive engineer/operator may act as a passive system monitor, in addition to an active system controller.

Hazard means an existing or potential condition that can result in an accident.

High degree of confidence, as applied to the highest level of aggregation, means there exists credible safety analysis supporting the conclusion that the likelihood of the proposed condition associated with the new product being less safe than the previous condition is very small.

Human factors refers to a body of knowledge about human limitations, human abilities, and other human characteristics, such as behavior and motivation, that must be considered in product design.

Human-machine interface (HMI) means the interrelated set of controls and displays that allows humans to interact with the machine.

Initialization refers to the startup process when it is determined that a product has all required data input and the product is prepared to function as intended.

Mandatory directive has the meaning set forth in § 220.5 of this chapter.

Materials handling refers to explicit instructions for handling safety-critical components established to comply with procedures specified in the PSP.

Mean Time to Hazardous Event (MTTHE) means the average or expected time that a subsystem or component will operate prior to the occurrence of an unsafe failure.

New or next-generation train control system means a train control system using technologies not in use in revenue service at the time of PSP submission or without established histories of safe practice.

Petition for approval means a petition to FRA for approval to use a product on a railroad as described in its PSP. The petition for approval is to contain information that is relevant to determining the safety of the resulting system; relevant to determining compliance with this part; and relevant to determining the safety of the product, including a complete copy of the product's PSP and supporting safety analysis.

Predefined change means any post-implementation modification to the use of a product that is provided for in the PSP (see § 236.907(b)).

Previous Condition refers to the estimated risk inherent in the portion of the existing method of operation that is relevant to the change under analysis (including the elements of any existing signal or train control system relevant to the review of the product).

Processor-based, as used in this subpart, means dependent on a digital processor for its proper functioning.

Product means a processor-based signal or train control system, subsystem, or component.

Product Safety Plan (or *PSP*) refers to a formal document which describes in detail all of the safety aspects of the product, including but not limited to procedures for its development, installation, implementation, operation, maintenance, repair, inspection, testing and modification, as well as analyses supporting its safety claims, as described in § 236.907.

Railroad Safety Program Plan (or *RSPP*) refers to a formal document which describes a railroad's strategy for addressing safety hazards associated with operation of products under this subpart and its program for execution of such strategy though the use of PSP requirements, as described in § 236.905.

Revision control means a chain of custody regimen designed to positively identify safety-critical components and spare equipment availability, including repair/replacement tracking in accordance with procedures outlined in the PSP.

Risk means the expected probability of occurrence for an individual accident event (probability) multiplied by the severity of the expected consequences associated with the accident (severity).

Risk assessment means the process of determining, either quantitatively or qualitatively, the measure of risk associated with use of the product under all intended operating conditions or the previous condition.

Safety-critical, as applied to a function, a system, or any portion thereof, means the correct performance of which is essential to safety of personnel or equipment, or both; or the incorrect performance of which could cause a hazardous condition, or allow a hazardous condition which was intended to be prevented by the function or system to exist.

Subsystem means a defined portion of a system.

System refers to a signal or train control system and includes all subsystems and components thereof, as the context requires.

System Safety Precedence means the order of precedence in which methods used to eliminate or control identified hazards within a system are implemented.

Validation means the process of determining whether a product's design requirements fulfill its intended design objectives during its development and life-cycle. The goal of the validation process is to determine ''whether the correct product was built.''

Verification means the process of determining whether the results of a given phase of the development cycle fulfill the validated requirements established at the start of that phase. The goal of the verification process is to determine ''whether the product was built correctly.''

§ 236.905 Railroad Safety Program Plan (RSPP).

(a) *What is the purpose of an RSPP?* A railroad subject to this subpart shall develop an RSPP, subject to FRA approval, that serves as its principal safety document for all safety-critical products. The RSPP must establish the minimum PSP requirements that will govern the development and implementation of all products subject to this subpart, consistent with the provisions contained in § 236.907.

(b) *What subject areas must the RSPP address?* The railroad's RSPP must address, at a minimum, the following subject areas:

(1) *Requirements and concepts.* The RSPP must require a description of the preliminary safety analysis, including:

(i) A complete description of methods used to evaluate a system's behavioral characteristics;

(ii) A complete description of risk assessment procedures;

(iii) The system safety precedence followed; and

(iv) The identification of the safety assessment process.

(2) *Design for verification and validation.* The RSPP must require the identification of verification and validation methods for the preliminary safety analysis, initial development process, and future incremental changes, including standards to be used in the verification and validation process, consistent with Appendix C to this part. The RSPP must require that references to any non-published standards be included in the PSP.

(3) *Design for human factors.* The RSPP must require a description of the process used during product development to identify human factors issues and develop design requirements which address those issues.

(4) *Configuration management control plan.* The RSPP must specify requirements for configuration management for all products to which this subpart applies.

(c) *How are RSPP's approved?* (1) Each railroad shall submit a petition for approval of an RSPP in triplicate to the Associate Administrator for Safety, FRA, 1120 Vermont Avenue, NW., Mail

Stop 25, Washington, DC 20590. The petition must contain a copy of the proposed RSPP, and the name, title, address, and telephone number of the railroad's primary contact person for review of the petition.

(2) Normally within 180 days of receipt of a petition for approval of an RSPP, FRA:

(i) Grants the petition, if FRA finds that the petition complies with applicable requirements of this subpart, attaching any special conditions to the approval of the petition as necessary to carry out the requirements of this subpart;

(ii) Denies the petition, setting forth reasons for denial; or

(iii) Requests additional information.

(3) If no action is taken on the petition within 180 days, the petition remains pending for decision. The petitioner is encouraged to contact FRA for information concerning its status.

(4) FRA may reopen consideration of any previously-approved petition for cause, providing reasons for such action.

(d) *How are RSPP's modified?* (1) Railroads shall obtain FRA approval for any modification to their RSPP which affects a safety-critical requirement of a PSP. Other modifications do not require FRA approval.

(2) Petitions for FRA approval of RSPP modifications are subject to the same procedures as petitions for initial RSPP approval, as specified in paragraph (c) of this section. In addition, such petitions must identify the proposed modification(s) to be made, the reason for the modification(s), and the effect of the modification(s) on safety.

§ 236.907 Product Safety Plan (PSP).

(a) *What must a PSP contain?* The PSP must include the following:

(1) A complete description of the product, including a list of all product components and their physical relationship in the subsystem or system;

(2) A description of the railroad operation or categories of operations on which the product is designed to be used, including train movement density, gross tonnage, passenger train movement density, hazardous materials volume, railroad operating rules, and operating speeds;

(3) An operational concepts document, including a complete description of the product functionality and information flows;

(4) A safety requirements document, including a list with complete descriptions of all functions which the product performs to enhance or preserve safety;

(5) A document describing the manner in which product architecture satisfies safety requirements;

(6) A hazard log consisting of a comprehensive description of all safety-relevant hazards to be addressed during the life cycle of the product, including maximum threshold limits for each hazard (for unidentified hazards, the threshold shall be exceeded at one occurrence);

(7) A risk assessment, as prescribed in § 236.909 and Appendix B to this part;

(8) A hazard mitigation analysis, including a complete and comprehensive description of all hazards to be addressed in the system design and development, mitigation techniques used, and system safety precedence followed, as prescribed by the applicable RSPP;

(9) A complete description of the safety assessment and verification and validation processes applied to the product and the results of these processes, describing how subject areas covered in Appendix C to this part are either: addressed directly, addressed using other safety criteria, or not applicable;

(10) A complete description of the safety assurance concepts used in the product design, including an explanation of the design principles and assumptions;

(11) A human factors analysis, including a complete description of all human-machine interfaces, a complete description of all functions performed by humans in connection with the product to enhance or preserve safety, and an analysis in accordance with Appendix E to this part or in accordance with other criteria if demonstrated to the satisfaction of the Associate Administrator for Safety to be equally suitable;

(12) A complete description of the specific training of railroad and contractor employees and supervisors necessary to ensure the safe and proper installation, implementation, operation,

maintenance, repair, inspection, testing, and modification of the product;

(13) A complete description of the specific procedures and test equipment necessary to ensure the safe and proper installation, implementation, operation, maintenance, repair, inspection, testing, and modification of the product. These procedures, including calibration requirements, shall be consistent with or explain deviations from the equipment manufacturer's recommendations;

(14) An analysis of the applicability of the requirements of subparts A through G of this part to the product that may no longer apply or are satisfied by the product using an alternative method, and a complete explanation of the manner in which those requirements are otherwise fulfilled (see § 234.275 of this chapter and § 236.901(c));

(15) A complete description of the necessary security measures for the product over its life-cycle;

(16) A complete description of each warning to be placed in the Operations and Maintenance Manual identified in § 236.919, and of all warning labels required to be placed on equipment as necessary to ensure safety;

(17) A complete description of all initial implementation testing procedures necessary to establish that safety-functional requirements are met and safety-critical hazards are appropriately mitigated;

(18) A complete description of:

(i) All post-implementation testing (validation) and monitoring procedures, including the intervals necessary to establish that safety-functional requirements, safety-critical hazard mitigation processes, and safety-critical tolerances are not compromised over time, through use, or after maintenance (repair, replacement, adjustment) is performed; and

(ii) Each record necessary to ensure the safety of the system that is associated with periodic maintenance, inspections, tests, repairs, replacements, adjustments, and the system's resulting conditions, including records of component failures resulting in safety-relevant hazards (see § 236.917(e)(3));

(19) A complete description of any safety-critical assumptions regarding availability of the product, and a complete description of all backup methods of operation; and

(20) A complete description of all incremental and predefined changes (see paragraphs (b) and (c) of this section).

(b) *What requirements apply to predefined changes?* (1) Predefined changes are not considered design modifications requiring an entirely new safety verification process, a revised PSP, and an informational filing or petition for approval in accordance with § 236.915. However, the risk assessment for the product must demonstrate that operation of the product, as modified by any predefined change, satisfies the minimum performance standard.

(2) The PSP must identify configuration/revision control measures designed to ensure that safety-functional requirements and safety-critical hazard mitigation processes are not compromised as a result of any such change. (Software changes involving safety functional requirements or safety critical hazard mitigation processes for components in use are also addressed in paragraph (c) of this section.)

(c) *What requirements apply to other product changes?* (1) Incremental changes are planned product version changes described in the initial PSP where slightly different specifications are used to allow the gradual enhancement of the product's capabilities. Incremental changes shall require verification and validation to the extent the changes involve safety-critical functions.

(2) Changes classified as maintenance require validation.

(d) *What are the responsibilities of the railroad and product supplier regarding communication of hazards?* (1) The PSP shall specify all contractual arrangements with hardware and software suppliers for immediate notification of any and all safety critical software upgrades, patches, or revisions for their processor-based system, sub-system, or component, and the reasons for such changes from the suppliers, whether or not the railroad has experienced a failure of that safety-critical system, subsystem, or component.

(2) The PSP shall specify the railroad's procedures for action upon notification of a safety-critical upgrade, patch, or revision for this processor-based system, sub-system, or component, and until the upgrade, patch, or revision has been installed; and such action shall be consistent with the criterion set forth in § 236.915(d) as if the failure had occurred on that railroad.

(3) The PSP must identify configuration/revision control measures designed to ensure that safety-functional requirements and safety-critical hazard mitigation processes are not compromised as a result of any such change, and that any such change can be audited.

(4) Product suppliers entering into contractual arrangements for product support described in a PSP must promptly report any safety-relevant failures and previously unidentified hazards to each railroad using the product.

§ 236.909 Minimum performance standard.

(a) *What is the minimum performance standard for products covered by this subpart?* The safety analysis included in the railroad's PSP must establish with a high degree of confidence that introduction of the product will not result in risk that exceeds the previous condition. The railroad shall determine, prior to filing its petition for approval or informational filing, that this standard has been met and shall make available the necessary analyses and documentation as provided in this subpart.

(b) *How does FRA determine whether the PSP requirements for products covered by subpart H have been met?* With respect to any FRA review of a PSP, the Associate Administrator for Safety independently determines whether the railroad's safety case establishes with a high degree of confidence that introduction of the product will not result in risk that exceeds the previous condition. In evaluating the sufficiency of the railroad's case for the product, the Associate Administrator for Safety considers, as applicable, the factors pertinent to evaluation of risk assessments, listed in § 236.913(g)(2).

(c) *What is the scope of a full risk assessment required by this section?* A full risk assessment performed under this subpart must address the safety risks affected by the introduction, modification, replacement, or enhancement of a product. This includes risks associated with the previous condition which are no longer present as a result of the change, new risks not present in the previous condition, and risks neither newly created nor eliminated whose nature (probability of occurrence or severity) is nonetheless affected by the change.

(d) *What is an abbreviated risk assessment, and when may it be used?* (1) An abbreviated risk assessment may be used in lieu of a full risk assessment to show compliance with the performance standard if:

(i) No new hazards are introduced as a result of the change;

(ii) Severity of each hazard associated with the previous condition does not increase from the previous condition; and

(iii) Exposure to such hazards does not change from the previous condition.

(2) An abbreviated risk assessment supports the finding required by paragraph (a) of this section if it establishes that the resulting MTTHE for the proposed product is greater than or equal to the MTTHE for the system, component or method performing the same function in the previous condition. This determination must be supported by credible safety analysis sufficient to persuade the Associate Administrator for Safety that the likelihood of the new product's MTTHE being less than the MTTHE for the system, component, or method performing the same function in the previous condition is very small.

(3) Alternatively, an abbreviated risk assessment supports the finding required by paragraph (a) of this section if:

(i) The probability of failure for each hazard of the product is equal to or less the corresponding recommended Specific Quantitative Hazard Probability Ratings classified as more favorable than ''undesirable'' by AREMA Manual Part 17.3.5 (Recommended Procedure for Hazard Identification and Management of Vital Electronic/Software-Based Equipment Used in Signal and

Train Control Applications), or—in the case of a hazard classified as undesirable—the Associate Administrator for Safety concurs that mitigation of the hazard within the framework of the electronic system is not practical and the railroad proposes reasonable steps to undertake other mitigation. The Director of the Federal Register approves the incorporation by reference of the entire AREMA Communications and Signal Manual, Volume 4, Section 17—Quality Principles (2005) in this section in accordance with 5 U.S.C. 552(a) and 1 CFR part 51. You may obtain a copy of the incorporated standard from American Railway Engineering and Maintenance of Way Association, 8201 Corporation Drive, Suite 1125, Landover, MD 20785–2230. You may inspect a copy of the incorporated standard at the Federal Railroad Administration, Docket Clerk, 1120 Vermont Ave., NW., Suite 7000, or at the National Archives and Records Administration (NARA). For information on the availability of this material at NARA, call 202–741–6030, or go to *http://www.archives.gov/federal_register/code_of_federal_regulations/ibr_locations.html*;

(ii) The product is developed in accordance with:

(A) AREMA Manual Part 17.3.1 (Communications and Signal Manual of Recommended Practices, Recommended Safety Assurance Program for Electronic/Software Based Products Used in Vital Signal Applications);

(B) AREMA Manual Part 17.3.3 (Communications and Signal Manual of Recommended Practices, Recommended Practice for Hardware Analysis for Vital Electronic/Software-Based Equipment Used in Signal and Train Control Applications);

(C) AREMA Manual Part 17.3.5 (Communications and Signal Manual of Recommended Practices, Recommended Practice for Hazard Identification and Management of Vital Electronic/Software-Based Equipment Used in Signal and Train Control Applications);

(D) Appendix C of this subpart; and

(iii) Analysis supporting the PSP suggests no credible reason for believing that the product will be less safe than the previous condition.

(e) *How are safety and risk measured for the full risk assessment?* Risk assessment techniques, including both qualitative and quantitative methods, are recognized as providing credible and useful results for purposes of this section if they apply the following principles:

(1) Safety levels must be measured using competent risk assessment methods and must be expressed as the total residual risk in the system over its expected life-cycle after implementation of all mitigating measures described in the PSP. Appendix B to this part provides criteria for acceptable risk assessment methods. Other methods may be acceptable if demonstrated to the satisfaction of the Associate Administrator for Safety to be equally suitable.

(2) For the previous condition and for the life-cycle of the product, risk levels must be expressed in units of consequences per unit of exposure.

(i) In all cases exposure must be expressed as total train miles traveled per year. Consequences must identify the total cost, including fatalities, injuries, property damage, and other incidental costs, such as potential consequences of hazardous materials involvement, resulting from preventable accidents associated with the function(s) performed by the system. A railroad may, as an alternative, use a risk metric in which consequences are measured strictly in terms of fatalities.

(ii) In those cases where there is passenger traffic, a second risk metric must be calculated, using passenger-miles traveled per year as the exposure, and total societal costs of passenger injuries and fatalities, resulting from preventable accidents associated with the function(s) performed by the system, as the consequences.

(3) If the description of railroad operations for the product required by § 236.907(a)(2) involves changes to the physical or operating conditions on the railroad prior to or within the expected life cycle of the product subject to review under this subpart, the previous condition shall be adjusted to reflect the lower risk associated with systems

needed to maintain safety and performance at higher speeds or traffic volumes. In particular, the previous condition must be adjusted for assumed implementation of systems necessary to support higher train speeds as specified in § 236.0, as well as other changes required to support projected increases in train operations. The following specific requirements apply:

(i) If the current method of operation would not be adequate under § 236.0 for the proposed operations, then the adjusted previous condition must include a system as required under § 236.0, applied as follows:

(A) The minimum system where a passenger train is operated at a speed of 60 or more miles per hour, or a freight train is operated at a speed of 50 or more miles per hour, shall be a traffic control system;

(B) The minimum system where a train is operated at a speed of 80 or more miles per hour, but not more than 110 miles per hour, shall be an automatic cab signal system with automatic train control; and

(C) The minimum system where a train is operated at a speed of more than 110 miles per hour shall be a system determined by the Associate Administrator for Safety to provide an equivalent level of safety to systems required or authorized by FRA for comparable operations.

(ii) If the current method of operation would be adequate under § 236.0 for the proposed operations, but the current system is not at least as safe as a traffic control system, then the adjusted previous condition must include a traffic control system in the event of any change that results in:

(A) An annual average daily train density of more than twelve trains per day; or

(B) An increase in the annual average daily density of passenger trains of more than four trains per day.

(iii) Paragraph (e)(3)(ii)(A) of this section shall apply in all situations where train volume will exceed more than 20 trains per day but shall not apply to situations where train volume will exceed 12 trains per day but not exceed 20 trains per day, if in its PSP the railroad makes a showing sufficient to establish, in the judgment of the Associate Administrator for Safety, that the current method of operation is adequate for a specified volume of traffic in excess of 12 trains per day, but not more than 20 trains per day, without material delay in the movement of trains over the territory and without unreasonable expenditures to expedite those movements when compared with the expense of installing and maintaining a traffic control system.

(4) In the case review of a PSP that has been consolidated with a proceeding pursuant to part 235 of this subchapter (see § 236.911(b)), the base case shall be determined as follows:

(i) If FRA determines that discontinuance or modification of the system should be granted without regard to whether the product is installed on the territory, then the base case shall be the conditions that would obtain on the territory following the discontinuance or modification. NOTE: This is an instance in which the base case is posited as greater risk than the actual (unadjusted) previous condition because the railroad would have obtained relief from the requirement to maintain the existing signal or train control system even if no new product had been proffered.

(ii) If FRA determines that discontinuance or modification of the system should be denied without regard to whether the product is installed on the territory, then the base case shall remain the previous condition (unadjusted).

(iii) If, after consideration of the application and review of the PSP, FRA determines that neither paragraph (e)(4)(i) nor paragraph (e)(4)(ii) of this section should apply, FRA will establish a base case that is consistent with safety and in the public interest.

§ 236.911 Exclusions.

(a) *Does this subpart apply to existing systems?* The requirements of this subpart do not apply to products in service as of June 6, 2005. Railroads may continue to implement and use these products and components from these existing products.

(b) *How will transition cases be handled?* Products designed in accordance with subparts A through G of this part

which are not in service but are developed or are in the developmental stage prior to March 7, 2005, may be excluded upon notification to FRA by June 6, 2005, if placed in service by March 7, 2008. Railroads may continue to implement and use these products and components from these existing products. A railroad may at any time elect to have products that are excluded made subject to this subpart by submitting a PSP as prescribed in § 236.913 and otherwise complying with this subpart.

(c) *How are office systems handled?* The requirements of this subpart do not apply to existing office systems and future deployments of existing office system technology. However, a subsystem or component of an office system must comply with the requirements of this subpart if it performs safety-critical functions within, or affects the safety performance of, a new or next-generation train control system. For purposes of this section, ''office system'' means a centralized computer-aided train-dispatching system or centralized traffic control board.

(d) *How are modifications to excluded products handled?* Changes or modifications to products otherwise excluded from the requirements of this subpart by this section are not excluded from the requirements of this subpart if they result in a degradation of safety or a material increase in safety-critical functionality.

(e) *What other rules apply to excluded products?* Products excluded by this section from the requirements of this subpart remain subject to subparts A through G of this part as applicable.

§ 236.913 Filing and approval of PSPs.

(a) *Under what circumstances must a PSP be prepared?* A PSP must be prepared for each product covered by this subpart. A joint PSP must be prepared when:

(1) The territory on which a product covered by this subpart is normally subject to joint operations, or is operated upon by more than one railroad; and

(2) The PSP involves a change in method of operation.

(b) *Under what circumstances must a railroad submit a petition for approval for a PSP or PSP amendment, and when may a railroad submit an informational filing?* Depending on the nature of the proposed product or change, the railroad shall submit either an informational filing or a petition for approval. Submission of a petition for approval is required for PSPs or PSP amendments concerning installation of new or next-generation train control systems. All other actions that result in the creation of a PSP or PSP amendment require an informational filing and are handled according to the procedures outlined in paragraph (c) of this section. Applications for discontinuance and material modification of signal and train control systems remain governed by parts 235 and 211 of this chapter; and petitions subject to this section may be consolidated with any relevant application for administrative handling.

(c) *What are the procedures for informational filings?* The following procedures apply to PSPs and PSP amendments which do not require submission of a petition for approval, but rather require an informational filing:

(1) Not less than 180 days prior to planned use of the product in revenue service as described in the PSP or PSP amendment, the railroad shall submit an informational filing to the Associate Administrator for Safety, FRA, 1120 Vermont Avenue, NW., Mail Stop 25, Washington, DC 20590. The informational filing must provide a summary description of the PSP or PSP amendment, including the intended use of the product, and specify the location where the documentation as described in § 236.917(a)(1) is maintained.

(2) Within 60 days of receipt of the informational filing, FRA:

(i) Acknowledges receipt of the filing;

(ii) Acknowledges receipt of the informational filing and requests further information; or

(iii) Acknowledges receipt of the filing and notifies the railroad, for good cause, that the filing will be considered as a petition for approval as set forth in paragraph (d) of this section, and requests such further information as may be required to initiate action on the petition for approval. Examples of good cause, any one of which is sufficient, include: the PSP describes a product with unique architectural concepts; the

PSP describes a product that uses design or safety assurance concepts considered outside existing accepted practices (see Appendix C); and the PSP describes a locomotive-borne product that commingles safety-critical train control processing functions with locomotive operational functions. In addition, good cause includes any instance where the PSP or PSP amendment does not appear to support its safety claim of satisfaction of the performance standard, after FRA has requested further information as provided in paragraph (c)(2)(ii) of this section.

(d) *What procedures apply to petitions for approval?* The following procedures apply to PSPs and PSP amendments which require submission of a petition for approval:

(1) *Petitions for approval involving prior FRA consultation.* (i) The railroad may file a Notice of Product Development with the Associate Administrator for Safety not less than 30 days prior to the end of the system design review phase of product development and 180 days prior to planned implementation, inviting FRA to participate in the design review process and receive periodic briefings and updates as needed to follow the course of product development. At a minimum, the Notice of Product Development must contain a summary description of the product to be developed and a brief description of goals for improved safety.

(ii) Within 15 days of receipt of the Notice of Product Development, the Associate Administrator for Safety either acknowledges receipt or acknowledges receipt and requests more information.

(iii) If FRA concludes that the Notice of Product Development contains sufficient information, the Associate Administrator for Safety determines the extent and nature of the assessment and review necessary for final product approval. FRA may convene a technical consultation as necessary to discuss issues related to the design and planned development of the product.

(iv) Within 60 days of receiving the Notice of Product Development, the Associate Administrator for Safety provides a letter of preliminary review with detailed findings, including whether the design concepts of the proposed product comply with the requirements of this subpart, whether design modifications are necessary to meet the requirements of this subpart, and the extent and nature of the safety analysis necessary to comply with this subpart.

(v) Not less than 60 days prior to use of the product in revenue service, the railroad shall file with the Associate Administrator for Safety a petition for final approval.

(vi) Within 30 days of receipt of the petition for final approval, the Associate Administrator for Safety either acknowledges receipt or acknowledges receipt and requests more information. Whenever possible, FRA acts on the petition for final approval within 60 days of its filing by either granting it or denying it. If FRA neither grants nor denies the petition for approval within 60 days, FRA advises the petitioner of the projected time for decision and conducts any further consultations or inquiries necessary to decide the matter.

(2) *Other petitions for approval.* The following procedures apply to petitions for approval of PSPs which do not involve prior FRA consultation as described in paragraph (d)(1) of this section.

(i) Not less than 180 days prior to use of a product in revenue service, the railroad shall file with the Associate Administrator for Safety a petition for approval.

(ii) Within 60 days of receipt of the petition for approval, FRA either acknowledges receipt, or acknowledges receipt and requests more information.

(iii) Whenever possible, considering the scope, complexity, and novelty of the product or change, FRA acts on the petition for approval within 180 days of its filing by either granting it or denying it. If FRA neither grants nor denies the petition for approval within 180 days, it remains pending, and FRA provides the petitioner with a statement of reasons why the petition has not yet been approved.

(e) *What role do product users play in the process of safety review?* (1) FRA will publish in the FEDERAL REGISTER periodically a topic list including docket numbers for informational filings and a petition summary including docket numbers for petitions for approval.

(2) Interested parties may submit to FRA information and views pertinent to FRA's consideration of an informational filing or petition for approval. FRA considers comments to the extent practicable within the periods set forth in this section. In a proceeding consolidated with a proceeding under part 235 of this chapter, FRA considers all comments received.

(f) *Is it necessary to complete field testing prior to filing the petition for approval?* A railroad may file a petition for approval prior to completion of field testing of the product. The petition for approval should additionally include information sufficient for FRA to arrange monitoring of the tests. The Associate Administrator for Safety may approve a petition for approval contingent upon successful completion of the test program contained in the PSP or hold the petition for approval pending completion of the tests.

(g) *How are PSPs approved?* (1) The Associate Administrator for Safety grants approval of a PSP when:

(i) The petition for approval has been properly filed and contains the information required in § 236.907;

(ii) FRA has determined that the PSP complies with the railroad's approved RSPP and applicable requirements of this subpart; and

(iii) The risk assessment supporting the PSP demonstrates that the proposed product satisfies the minimum performance standard stated in § 236.909.

(2) The Associate Administrator for Safety considers the following applicable factors when evaluating the risk assessment:

(i) The extent to which recognized standards have been utilized in product design and in the relevant safety analysis;

(ii) The availability of quantitative data, including calculations of statistical confidence levels using accepted methods, associated with risk estimates;

(iii) The complexity of the product and the extent to which it will incorporate or deviate from design practices associated with previously established histories of safe operation;

(iv) The degree of rigor and precision associated with the safety analyses, including the comprehensiveness of the qualitative analyses, and the extent to which any quantitative results realistically reflect appropriate sensitivity cases;

(v) The extent to which validation of the product has included experiments and tests to identify uncovered faults in the operation of the product;

(vi) The extent to which identified faults are effectively addressed;

(vii) Whether the risk assessment for the previous condition was conducted using the same methodology as that for operation under the proposed condition; and

(viii) If an independent third-party assessment is required or is performed at the election of the supplier or railroad, the extent to which the results of the assessment are favorable.

(3) The Associate Administrator for Safety also considers when assessing PSPs the safety requirements for the product within the context of the proposed method of operations, including:

(i) The degree to which the product is relied upon as the primary safety system for train operations; and

(ii) The degree to which the product is overlaid upon and its operation is demonstrated to be independent of safety-relevant rules, practices and systems that will remain in place following the change under review.

(4) As necessary to ensure compliance with this subpart and with the RSPP, FRA may attach special conditions to the approval of the petition.

(5) Following the approval of a petition, FRA may reopen consideration of the petition for cause. Cause for reopening a petition includes such circumstances as a credible allegation of error or fraud, assumptions determined to be invalid as a result of in-service experience, or one or more unsafe events calling into question the safety analysis underlying the approval.

(h) *Under what circumstances may a third-party assessment be required, and by whom may it be conducted?* (1) The PSP must be supported by an independent third party assessment of the product when FRA concludes it is necessary based upon consideration of the following factors:

(i) Those factors listed in paragraphs (g)(2)(i) through (g)(2)(vii) of this section;

(ii) The sufficiency of the assessment or audit previously conducted at the election of a supplier or railroad; and

(iii) Whether applicable requirements of subparts A through G of this part are satisfied.

(2) As used in this section, ''independent third party'' means a technically competent entity responsible to and compensated by the railroad (or an association on behalf of one or more railroads) that is independent of the supplier of the product. An entity that is owned or controlled by the supplier, that is under common ownership or control with the supplier, or that is otherwise involved in the development of the product is not considered ''independent'' within the meaning of this section. FRA may maintain a roster of recognized technically competent entities as a service to railroads selecting reviewers under this section; however, a railroad is not limited to entities currently listed on any such roster.

(3) The third-party assessment must, at a minimum, consist of the activities and result in production of documentation meeting the requirements of Appendix D to this part. However, when requiring an assessment pursuant to this section, FRA specifies any requirements in Appendix D to this part which the agency has determined are not relevant to its concerns and, therefore, need not be included in the assessment. The railroad shall make the final assessment report available to FRA upon request.

(i) *How may a PSP be amended?* A railroad may submit an amendment to a PSP at any time in the same manner as the initial PSP. Notwithstanding the otherwise applicable requirements found in this section and § 236.915, changes affecting the safety-critical functionality of a product may be made prior to the submission and approval of the PSP amendment as necessary in order to mitigate risk.

(j) *How may field testing be conducted prior to PSP approval?* (1) Field testing of a product may be conducted prior to the approval of a PSP by the submission of an informational filing by a railroad. The FRA will arrange to monitor the tests based on the information provided in the filing, which must include:

(i) A complete description of the product;

(ii) An operational concepts document;

(iii) A complete description of the specific test procedures, including the measures that will be taken to protect trains and on-track equipment;

(iv) An analysis of the applicability of the requirements of subparts A through G of this part to the product that will not apply during testing;

(v) The date testing will begin;

(vi) The location of the testing; and

(vii) A description of any effect the testing will have on the current method of operation.

(2) FRA may impose such additional conditions on this testing as may be necessary for the safety of train operations. Exemptions from regulations other than those contained in this part must be requested through waiver procedures in part 211 of this chapter.

[70 FR 11095, Mar. 7, 2005, as amended at 70 FR 72385, Dec. 5, 2005]

§ 236.915 Implementation and operation.

(a) *When may a product be placed or retained in service?* (1) Except as stated in paragraphs (a)(2) and (a)(3) of this section, a railroad may operate in revenue service any product 180 days after filing with FRA the informational filing for that product. The FRA filing date can be found in FRA's acknowledgment letter referred to in § 236.913(c)(2).

(2) Except as stated in paragraph (a)(3) of this section, if FRA approval is required for a product, the railroad shall not operate the product in revenue service until after the Associate Administrator for Safety has approved the petition for approval for that product pursuant to § 236.913.

(3) If after product implementation FRA elects, for cause, to treat the informational filing for the product as a petition for approval, the product may remain in use if otherwise consistent with the applicable law and regulations. FRA may impose special conditions for use of the product during the period of review for cause.

(b) *How does the PSP relate to operation of the product?* Each railroad shall comply with all provisions in the PSP for each product it uses and shall operate within the scope of initial operational assumptions and predefined changes identified by the PSP. Railroads may at any time submit an amended PSP according to the procedures outlined in § 236.913.

(c) *What precautions must be taken prior to interference with the normal functioning of a product?* The normal functioning of any safety-critical product must not be interfered with in testing or otherwise without first taking measures to provide for safe movement of trains, locomotives, roadway workers and on-track equipment that depend on normal functioning of such product.

(d) *What actions must be taken immediately upon failure of a safety-critical component?* When any safety-critical product component fails to perform its intended function, the cause must be determined and the faulty component adjusted, repaired, or replaced without undue delay. Until repair of such essential components are completed, a railroad shall take appropriate action as specified in the PSP. See also §§ 236.907(d), 236.917(b).

§ 236.917 Retention of records.

(a) *What life-cycle and maintenance records must be maintained?* (1) The railroad shall maintain at a designated office on the railroad:

(i) For the life-cycle of the product, adequate documentation to demonstrate that the PSP meets the safety requirements of the railroad's RSPP and applicable standards in this subpart, including the risk assessment; and

(ii) An Operations and Maintenance Manual, pursuant to § 236.919; and

(iii) Training records pursuant to § 236.923(b).

(2) Results of inspections and tests specified in the PSP must be recorded as prescribed in § 236.110.

(3) Contractors of the railroad shall maintain at a designated office training records pursuant to § 236.923(b).

(b) *What actions must the railroad take in the event of occurrence of a safety-relevant hazard?* After the product is placed in service, the railroad shall maintain a database of all safety-relevant hazards as set forth in the PSP and those that had not been previously identified in the PSP. If the frequency of the safety-relevant hazards exceeds the threshold set forth in the PSP (see § 236.907(a)(6)), then the railroad shall:

(1) Report the inconsistency in writing (by mail, facsimile, e-mail, or hand delivery to the Director, Office of Safety Assurance and Compliance, FRA, 1120 Vermont Ave., NW., Mail Stop 25, Washington, DC 20590, within 15 days of discovery. Documents that are hand delivered must not be enclosed in an envelope;

(2) Take prompt countermeasures to reduce the frequency of the safety-relevant hazard(s) below the threshold set forth in the PSP; and

(3) Provide a final report to the FRA Director, Office of Safety Assurance and Compliance, on the results of the analysis and countermeasures taken to reduce the frequency of the safety-relevant hazard(s) below the threshold set forth in the PSP when the problem is resolved.

§ 236.919 Operations and Maintenance Manual.

(a) The railroad shall catalog and maintain all documents as specified in the PSP for the installation, maintenance, repair, modification, inspection, and testing of the product and have them in one Operations and Maintenance Manual, readily available to persons required to perform such tasks and for inspection by FRA and FRA-certified State inspectors.

(b) Plans required for proper maintenance, repair, inspection, and testing of safety-critical products must be adequate in detail and must be made available for inspection by FRA and FRA-certified State inspectors where such products are deployed or maintained. They must identify all software versions, revisions, and revision dates. Plans must be legible and correct.

(c) Hardware, software, and firmware revisions must be documented in the Operations and Maintenance Manual according to the railroad's configuration management control plan and any additional configuration/revision control measures specified in the PSP.

(d) Safety-critical components, including spare equipment, must be positively identified, handled, replaced, and repaired in accordance with the procedures specified in the PSP.

§ 236.921 Training and qualification program, general.

(a) *When is training necessary and who must be trained?* Employers shall establish and implement training and qualification programs for products subject to this subpart. These programs must meet the minimum requirements set forth in the PSP and in §§ 236.923 through 236.929 as appropriate, for the following personnel:

(1) Persons whose duties include installing, maintaining, repairing, modifying, inspecting, and testing safety-critical elements of the railroad's products, including central office, wayside, or onboard subsystems;

(2) Persons who dispatch train operations (issue or communicate any mandatory directive that is executed or enforced, or is intended to be executed or enforced, by a train control system subject to this subpart);

(3) Persons who operate trains or serve as a train or engine crew member subject to instruction and testing under part 217 of this chapter, on a train operating in territory where a train control system subject to this subpart is in use;

(4) Roadway workers whose duties require them to know and understand how a train control system affects their safety and how to avoid interfering with its proper functioning; and

(5) The direct supervisors of persons listed in paragraphs (a)(1) through (a)(4) of this section.

(b) *What competencies are required?* The employer's program must provide training for persons who perform the functions described in paragraph (a) of this section to ensure that they have the necessary knowledge and skills to effectively complete their duties related to processor-based signal and train control equipment.

§ 236.923 Task analysis and basic requirements.

(a) *How must training be structured and delivered?* As part of the program required by § 236.921, the employer shall, at a minimum:

(1) Identify the specific goals of the training program with regard to the target population (craft, experience level, scope of work, etc.), task(s), and desired success rate;

(2) Based on a formal task analysis, identify the installation, maintenance, repair, modification, inspection, testing, and operating tasks that must be performed on a railroad's products. This includes the development of failure scenarios and the actions expected under such scenarios;

(3) Develop written procedures for the performance of the tasks identified;

(4) Identify the additional knowledge, skills, and abilities above those required for basic job performance necessary to perform each task;

(5) Develop a training curriculum that includes classroom, simulator, computer-based, hands-on, or other formally structured training designed to impart the knowledge, skills, and abilities identified as necessary to perform each task;

(6) Prior to assignment of related tasks, require all persons mentioned in § 236.921(a) to successfully complete a training curriculum and pass an examination that covers the product and appropriate rules and tasks for which they are responsible (however, such persons may perform such tasks under the direct onsite supervision of a qualified person prior to completing such training and passing the examination);

(7) Require periodic refresher training at intervals specified in the PSP that includes classroom, simulator, computer-based, hands-on, or other formally structured training and testing, except with respect to basic skills for which proficiency is known to remain high as a result of frequent repetition of the task; and

(8) Conduct regular and periodic evaluations of the effectiveness of the training program specified in § 236.923(a)(1) verifying the adequacy of the training material and its validity with respect to current railroads products and operations.

(b) *What training records are required?* Employers shall retain records which designate persons who are qualified

under this section until new designations are recorded or for at least one year after such persons leave applicable service. These records shall be kept in a designated location and be available for inspection and replication by FRA and FRA-certified State inspectors.

§ 236.925 Training specific to control office personnel.

Any person responsible for issuing or communicating mandatory directives in territory where products are or will be in use must be trained in the following areas, as applicable:

(a) Instructions concerning the interface between the computer-aided dispatching system and the train control system, with respect to the safe movement of trains and other on-track equipment;

(b) Railroad operating rules applicable to the train control system, including provision for movement and protection of roadway workers, unequipped trains, trains with failed or cut-out train control onboard systems, and other on-track equipment; and

(c) Instructions concerning control of trains and other on-track equipment in case the train control system fails, including periodic practical exercises or simulations, and operational testing under part 217 of this chapter to ensure the continued capability of the personnel to provide for safe operations under the alternative method of operation.

§ 236.927 Training specific to locomotive engineers and other operating personnel.

(a) *What elements apply to operating personnel?* Training provided under this subpart for any locomotive engineer or other person who participates in the operation of a train in train control territory must be defined in the PSP and the following elements must be addressed:

(1) Familiarization with train control equipment onboard the locomotive and the functioning of that equipment as part of the system and in relation to other onboard systems under that person's control;

(2) Any actions required of the onboard personnel to enable, or enter data to, the system, such as consist data, and the role of that function in the safe operation of the train;

(3) Sequencing of interventions by the system, including pre-enforcement notification, enforcement notification, penalty application initiation and post-penalty application procedures;

(4) Railroad operating rules applicable to the train control system, including provisions for movement and protection of any unequipped trains, or trains with failed or cut-out train control onboard systems and other on-track equipment;

(5) Means to detect deviations from proper functioning of onboard train control equipment and instructions regarding the actions to be taken with respect to control of the train and notification of designated railroad personnel; and

(6) Information needed to prevent unintentional interference with the proper functioning of onboard train control equipment.

(b) *How must locomotive engineer training be conducted?* Training required under this subpart for a locomotive engineer, together with required records, must be integrated into the program of training required by part 240 of this chapter.

(c) *What requirements apply to full automatic operation?* The following special requirements apply in the event a train control system is used to effect full automatic operation of the train:

(1) The PSP must identify all safety hazards to be mitigated by the locomotive engineer.

(2) The PSP must address and describe the training required with provisions for the maintenance of skills proficiency. As a minimum, the training program must:

(i) As described in § 236.923(a)(2), develop failure scenarios which incorporate the safety hazards identified in the PSP, including the return of train operations to a fully manual mode;

(ii) Provide training, consistent with § 236.923(a), for safe train operations under all failure scenarios and identified safety hazards that affect train operations;

(iii) Provide training, consistent with § 236.923(a), for safe train operations under manual control; and

(iv) Consistent with § 236.923(a), ensure maintenance of manual train operating skills by requiring manual starting and stopping of the train for an appropriate number of trips and by one or more of the following methods:

(A) Manual operation of a train for a 4-hour work period;

(B) Simulated manual operation of a train for a minimum of 4 hours in a Type I simulator as required; or

(C) Other means as determined following consultation between the railroad and designated representatives of the affected employees and approved by the FRA. The PSP must designate the appropriate frequency when manual operation, starting, and stopping must be conducted, and the appropriate frequency of simulated manual operation.

§ 236.929 Training specific to roadway workers.

(a) *How is training for roadway workers to be coordinated with part 214?* Training required under this subpart for a roadway worker must be integrated into the program of instruction required under part 214, subpart C of this chapter (''Roadway Worker Protection''), consistent with task analysis requirements of § 236.923. This training must provide instruction for roadway workers who provide protection for themselves or roadway work groups.

(b) *What subject areas must roadway worker training include?* (1) Instruction for roadway workers must ensure an understanding of the role of processor-based signal and train control equipment in establishing protection for roadway workers and their equipment.

(2) Instruction for roadway workers must ensure recognition of processor-based signal and train control equipment on the wayside and an understanding of how to avoid interference with its proper functioning.

(3) Instructions concerning the recognition of system failures and the provision of alternative methods of on-track safety in case the train control system fails, including periodic practical exercises or simulations and operational testing under part 217 of this chapter to ensure the continued capability of roadway workers to be free from the danger of being struck by a moving train or other on-track equipment.

APPENDIX A TO PART 236—CIVIL PENALTIES [1]

Section	Violation	Willful violation
Subpart A—Rules and Instructions—All Systems		
General:		
236.0 Applicability, minimum requirements	$2,500	$5,000
236.1 Plans, where kept	1,000	2,000
236.2 Grounds	1,000	2,000
236.3 Locking of signal apparatus housings:		
(a) Power interlocking machine cabinet not secured against unauthorized entry	2,500	5,000
(b) other violations	1,000	2,000
236.4 Interference with normal functioning of device	5,000	7,500
236.5 Design of control circuits on closed circuit principle	1,000	2,000
236.6 Hand-operated switch equipped with switch circuit controller	1,000	2,000
236.7 Circuit controller operated by switch-and-lock movement	1,000	2,000
236.8 Operating characteristics of electro-magnetic, electronic, or electrical apparatus	1,000	2,000
236.9 Selection of circuits through indicating or annunciating instruments	1,000	2,000
236.10 Electric locks, force drop type; where required	1,000	2,000
236.11 Adjustment, repair, or replacement of component	2,500	5,000
236.12 Spring switch signal protection; where required	1,000	2,000
236.13 Spring switch; selection of signal control circuits through circuit controller	1,000	2,000
236.14 Spring switch signal protection; requirements	1,000	2,000
236.15 Timetable instructions	1,000	2,000
236.16 Electric lock, main track releasing circuit:.		
(a) Electric lock releasing circuit on main track extends into fouling circuit where turnout not equipped with derail at clearance point either pipe-connected to switch or independently locked, electrically	2,500	5,000
(b) other violations	1,000	2,000
236.17 Pipe for operating connections, requirements	1,000	2,000
236.18 Software management control plan:.		
Failure to develop and adopt a plan	$5,000	$10,000

Section	Violation	Willful violation
Failure to fully implement plan	5,000	10,000
Inadequate plan	2,500	10,000
Roadway Signals and Cab Signals—		
236.21 Location of roadway signals	1,000	2,000
236.22 Semaphore signal arm; clearance to other objects	1,000	2,000
236.23 Aspects and indications	1,000	2,000
236.24 Spacing of roadway signals	2,500	5,000
236.26 Buffing device, maintenance	1,000	2,000
Track Circuits—		
236.51 Track circuit requirements:		
(a) Shunt fouling circuit used where permissible speed through turnout greater than 45 m.p.h	2,500	5,000
(b) Track relay not in de-energized position or device that functions as track relay not in its most restrictive state when train, locomotive, or car occupies any part of track circuit, except fouling section of turnout of hand-operated main-track crossover	2,500	5,000
(c) other violations	1,000	2,000
236.52 Relayed cut-section	1,000	2,000
236.53 Track circuit feed at grade crossing	1,000	2,000
236.54 Minimum length of track circuit	1,000	2,000
236.55 Dead section; maximum length	1,000	2,000
236.56 Shunting sensitivity	2,500	5,000
236.57 Shunt and fouling wires:		
(a) Shunt or fouling wires do not consist of at least two discrete conductors	2,500	5,000
(b) other violations	1,000	2,000
236.58 Turnout, fouling section:		
(a) Rail joint in shunt fouling section not bonded	2,500	5,000
(b) other violations	1,000	2,000
236.59 Insulated rail joints	1,000	2,000
236.60 Switch shunting circuit; use restricted	2,500	5,000
Wires and Cables—		
236.71 Signal wires on pole line and aerial cable	1,000	2,000
236.73 Open-wire transmission line; clearance to other circuits	1,000	2,000
236.74 Protection of insulated wire; splice in underground wire	1,000	2,000
236.76 Tagging of wires and interference of wires or tags with signal apparatus	1,000	2,000
Inspections and Tests; All Systems—		
236.101 Purpose of inspection and tests; removal from service or relay or device failing to meet test requirements	2,500	5,000
236.102 Semaphore or search-light signal mechanism	1,000	2,000
236.103 Switch circuit controller or point detector	1,000	2,000
236.104 Shunt fouling circuit	1,000	2,000
236.105 Electric lock	1,000	2,000
236.106 Relays	1,000	2,000
236.107 Ground tests	1,000	2,000
236.108 Insulation resistance tests, wires in trunking and cables:		
(a) Circuit permitted to function on a conductor having insulation resistance value less than 200,000 ohms	2,500	5,000
(b) other violations	1,000	2,000
236.109 Time releases, timing relays and timing devices	1,000	2,000
236.110 Results of tests	1,000	2,000
Subpart B—Automatic Block Signal Systems		
236.201 Track circuit control of signals	1,000	2,000
236.202 Signal governing movements over hand-operated switch	1,000	2,000
236.203 Hand-operated crossover between main tracks; protection	1,000	2,000
236.204 Track signaled for movements in both directions, requirements	1,000	2,000
236.205 Signal control circuits; requirements	1,000	2,000
236.206 Battery or power supply with respect to relay; location	1,000	2,000
Subpart C—Interlocking		
236.207 Electric lock on hand-operated switch; control:		
(a) Approach or time locking of electric lock on hand-operated switch can be defeated by unauthorized use of emergency device which is not kept sealed in the non-release position	2,500	5,000
(b) other violations	1,000	2,000
236.301 Where signals shall be provided	1,000	2,000
236.302 Track circuits and route locking	1,000	2,000
236.303 Control circuits for signals, selection through circuit controller operated by switch points or by switch locking mechanism	1,000	2,000

Section	Violation	Willful violation
236.304 Mechanical locking or same protection effected by circuits	1,000	2,000
236.305 Approach or time locking	1,000	2,000
236.306 Facing point lock or switch-and-lock movement	1,000	2,000
236.307 Indication locking:		
236.308 Mechanical or electric locking or electric circuits; requisites	1,000	2,000
236.309 Loss of shunt protection; where required:		
(a) Loss of shunt of five seconds or less permits release of route locking of power-operated switch, movable point frog, or derail	2,500	5,000
(b) Other violations	1,000	2,000
236.310 Signal governing approach to home signal	1,000	2,000
236.311 Signal control circuits, selection through track relays or devices functioning as track relays and through signal mechanism contacts and time releases at automatic interlocking	1,000	2,000
236.312 Movable bridge, interlocking of signal appliances with bridge devices:		
(a) Emergency bypass switch or device not locked or sealed	2,500	5,000
(b) other violations	1,000	2,000
236.314 Electric lock for hand-operated switch or derail:		
(a) Approach or time locking of electric lock at hand-operated switch or derail can be defeated by unauthorized use of emergency device which is not kept sealed in non-release position	2,500	5,000
(b) other violations	1,000	2,000
Rules and Instructions—		
236.326 Mechanical locking removed or disarranged; requirement for permitting train movements through interlocking	1,000	2,000
236.327 Switch, movable-point frog or split-point derail	1,000	2,000
236.328 Plunger of facing-point	1,000	2,000
236.329 Bolt lock	1,000	2,000
236.330 Locking dog of switch and lock movement	1,000	2,000
236.334 Point detector	1,000	2,000
236.335 Dogs, stops and trunnions of mechanical locking	1,000	2,000
236.336 Locking bed	1,000	2,000
236.337 Locking faces of mechanical locking; fit	1,000	2,000
236.338 Mechanical locking required in accordance with locking sheet and dog chart	1,000	2,000
236.339 Mechanical locking; maintenance requirements	1,000	2,000
236.340 Electromechanical interlocking machine; locking between electrical and mechanical levers	1,000	2,000
236.341 Latch shoes, rocker links, and quadrants	1,000	2,000
236.342 Switch circuit controller	1,000	2,000
Inspection and Tests—		
236.376 Mechanical locking	1,000	2,000
236.377 Approach locking	1,000	2,000
236.378 Time locking	1,000	2,000
236.379 Route locking	1,000	2,000
236.380 Indication locking	1,000	2,000
236.381 Traffic locking	1,000	2,000
236.382 Switch obstruction test	1,000	2,000
236.383 Valve locks, valves, and valve magnets	1,000	2,000
236.384 Cross protection		
236.386 Restoring feature on power switches		
236.387 Movable bridge locking	1,000	2,000
Subpart D—Traffic Control Systems Standards		
236.401 Automatic block signal system and interlocking standards applicable to traffic control systems:		
236.402 Signals controlled by track circuits and control operator	1,000	2,000
236.403 Signals at controlled point	1,000	2,000
236.404 Signals at adjacent control points	1,000	2,000
236.405 Track signaled for movements in both directions, change of direction of traffic	1,000	2,000
236.407 Approach or time locking; where required	1,000	2,000
236.408 Route locking	1,000	2,000
236.410 Locking, hand-operated switch; requirements:		
(a) Hand-operated switch on main track not electrically or mechanically locked in normal position where signal not provided to govern movement to main track, movements made at speeds in excess of 20 m.p.h., and train or engine movements may clear main track	2,500	5,000
(b) Hand-operated switch on signaled siding not electrically or mechanically locked in normal position where signal not provided to govern movements to signaled siding, train movements made at speeds in excess of 30 m.p.h., and train or engine movements may clear signaled siding	2,500	5,000
(c) Approach or time locking of electric lock at hand-operated switch can be defeated by use of emergency release device of electric lock which is not kept sealed in non-release position	2,500	5,000

Section	Violation	Willful violation
(d) other violations	1,000	2,000
Rules and Instructions—		
236.426 Interlocking rules and instructions applicable to traffic control systems	1,000	2,000
236.476 Interlocking inspections and tests applicable to traffic control systems	1,000	2,000
Subpart E—Automatic Train Stop, Train Control and Cab Signal Systems Standards		
236.501 Forestalling device and speed control	1,000	2,000
236.502 Automatic brake application, initiation by restrictive block conditions stopping distance in advance	1,000	2,000
236.503 Automatic brake application; initiation when predetermined rate of speed exceeded	1,000	2,000
236.504 Operations interconnected with automatic block-signal system	1,000	2,000
236.505 Proper operative relation between parts along roadway and parts on locomotive	1,000	2,000
236.506 Release of brakes after automatic application	1,000	2,000
236.507 Brake application; full service	1,000	2,000
236.508 Interference with application of brakes by means of brake valve	1,000	2,000
236.509 Two or more locomotives coupled	1,000	2,000
236.511 Cab signals controlled in accordance with block conditions stopping distance in advance	1,000	2,000
236.512 Cab signal indication when locomotive enters blocks	1,000	2,000
236.513 Audible indicator	1,000	2,000
236.514 Interconnection of cab signal system with roadway signal system	1,000	2,000
236.515 Visibility of cab signals	1,000	2,000
236.516 Power supply	1,000	2,000
Rules and Instructions; Roadway—		
236.526 Roadway element not functioning properly	2,500	5,000
236.527 Roadway element insulation resistance	1,000	2,000
236.528 Restrictive condition resulting from open hand-operated switch; requirement	1,000	2,000
236.529 Roadway element inductor; height and distance from rail	1,000	2,000
236.531 Trip arm; height and distance from rail	1,000	2,000
236.532 Strap iron inductor; use restricted	1,000	2,000
236.534 Rate of pressure reduction; equalizing reservoir or brake pipe	1,000	2,000
236.551 Power supply voltage	1,000	2,000
236.552 Insulation resistance	1,000	2,000
236.553 Seal, where required	2,500	5,000
236.554 Rate of pressure reduction; equalizing reservoir or brake pipe	1,000	2,000
236.555 Repaired or rewound receiver coil	1,000	2,000
236.556 Adjustment of relay	1,000	2,000
236.557 Receiver; location with respect to rail	1,000	2,000
236.560 Contact element, mechanical trip type; location with respect to rail	1,000	2,000
236.562 Minimum rail current required	1,000	2,000
236.563 Delay time	1,000	2,000
236.564 Acknowledging time	1,000	2,000
236.565 Provision made for preventing operation of pneumatic brake-applying apparatus by double-heading clock; requirement	1,000	2,000
236.566 Locomotive of each train operating in train stop, train control or cab signal territory; equipped	5,000	7,500
236.567 Restrictions imposed when device fails and/or is cut out en route:		
(a) Report not made to designated officer at next available point of communication after automatic train stop, train control, or cab signal device fails and/or is cut en route	5,000	7,500
(b) Train permitted to proceed at speed exceeding 79 m.p.h. where automatic train stop, train control, or cab signal device fails and/or is cut out en route when absolute block established in advance of train on which device is inoperative	5,000	7,500
(c) other violations	1,000	2,000
236.568 Difference between speeds authorized by roadway signal and cab signal; action	1,000	2,000
Inspection and Tests; Roadway—		
236.576 Roadway element	1,000	2,000
236.577 Test, acknowledgement, and cut-in circuits	1,000	2,000
Inspection and Tests; Locomotive—		
236.586 Daily or after trip test	2,500	5,000
236.587 Departure test:		
(a) Test of automatic train stop, train control, or cab signal apparatus on locomotive not made on departure of locomotive from initial terminal if equipment on locomotive not cut out between initial terminal and equipped territory	5,000	7,500
(b) Test of automatic train stop, train control, or cab signal apparatus on locomotive not made immediately on entering equipped territory, if equipment on locomotive cut out between initial terminal and equipped territory	5,000	7,500
(c) Automatic train stop, train control, or cab signal apparatus on locomotive making more than one trip within 24-hour period not given departure test within corresponding 24-hour period	5,000	7,500
(d) other violations	2,500	5,000

Section	Violation	Willful violation
236.588 Periodic test	2,500	5,000
236.589 Relays	2,500	5,000
236.590 Pneumatic apparatus:		
(a) Automatic train stop, train control, or cab signal apparatus not inspected and cleaned at least once every 736 days	2,500	5,000
(b) other violations	1,000	2,000
Subpart F—Dragging Equipment and Slide Detectors and Other Similar Protective Devices; Standards		
236.601 Signals controlled by devices; location	1,000	2,000
Subpart H—Standards for Processor-Based Signal and Train Control Systems		
236.905 Railroad Safety Program Plan (RSPP):		
Failure to develop and submit RSPP when required	5,000	7,500
Failure to obtain FRA approval for a modification to RSPP	5,000	7,500
236.907 Product Safety Plan (PSP):		
Failure to develop a PSP	5,000	7,500
Failure to submit a PSP when required	5,000	7,500
236.909 Minimum Performance Standard:		
Failure to make analyses or documentation available	2,500	5,000
Failure to determine that the standard has been met	5,000	7,500
236.913 Notification to FRA of PSPs:	2,500	5,000
Failure to prepare a PSP or PSP amendment as required	5,000	7,500
Failure to submit a PSP or PSP amendment as required	5,000	7,500
Field testing without authorization or approval	10,000	20,000
236.915 Implementation and operation:		
(a) Operation of product without authorization or approval	10,000	20,000
(b) Failure to comply with PSP	2,500	5,000
(c) Interference with normal functioning safety-critical product	7,500	15,000
(d) Failure to determine cause and adjust, repair or replace without undue delay or take appropriate action pending repair	5,000	7,500
236.917 Retention of records:		
Failure to maintain records as required	7,500	15,000
Failure to report inconsistency	10,000	20,000
Failure to take prompt countermeasures	10,000	20,000
Failure to provide final report	2,500	5,000
236.919 Operations and Maintenance Manual	3,000	6,000
236.921 Training and qualification program, general	3,000	6,000
236.923 Task analysis and basic requirements:		
Failure to develop an acceptable training program	2,500	5,000
Failure to train persons as required	2,500	5,000
Failure to conduct evaluation of training program as required	2,500	5,000
Failure to maintain records as required	1,500	3,000
236.925 Training specific to control office personnel	2,500	5,000
236.927 Training specific to locomotive engineers and other operating personnel	2,500	5,000
236.929 Training specific to roadway workers	2,500	5,000

[1] A penalty may be assessed against an individual only for a willful violation. The Administrator reserves the right to assess a penalty of up to $27,000 for any violation where circumstances warrant. See 49 CFR part 209, appendix A.

[53 FR 52936, Dec. 29, 1988, as amended at 63 FR 11624, Mar. 10, 1998; 69 FR 30595, May 28, 2004; 70 FR 11104, Mar. 7, 2005]

APPENDIX B TO PART 236—RISK ASSESSMENT CRITERIA

The safety-critical performance of each product for which risk assessment is required under this part must be assessed in accordance with the following criteria or other criteria if demonstrated to the Associate Administrator for Safety to be equally suitable:

(a) *How are risk metrics to be expressed?* The risk metric for the proposed product must describe with a high degree of confidence the accumulated risk of a train system that operates over a life-cycle of 25 years or greater. Each risk metric for the proposed product must be expressed with an upper bound, as estimated with a sensitivity analysis, and the risk value selected must be demonstrated to have a high degree of confidence.

(b) *How does the risk assessment handle interaction risks for interconnected subsystems/components?* The safety-critical assessment of each product must include all of its interconnected subsystems and components and, where applicable, the interaction between such subsystems.

(c) *How is the previous condition computed?* Each subsystem or component of the previous condition must be analyzed with a Mean Time to Hazardous Event (MTTHE) as

specified subject to a high degree of confidence.

(d) *What major risk characteristics must be included when relevant to assessment?* Each risk calculation must consider the total signaling and train control system and method of operation, as subjected to a list of hazards to be mitigated by the signaling and train control system. The methodology requirements must include the following major characteristics, when they are relevant to the product being considered:

(1) Track plan infrastructure;

(2) Total number of trains and movement density;

(3) Train movement operational rules, as enforced by the dispatcher and train crew behaviors;

(4) Wayside subsystems and components; and

(5) Onboard subsystems and components.

(e) *What other relevant parameters must be determined for the subsystems and components?* The failure modes of each subsystem or component, or both, must be determined for the integrated hardware/software (where applicable) as a function of the Mean Time to Failure (MTTF) failure restoration rates, and the integrated hardware/software coverage of all processor-based subsystems or components, or both. Train operating and movement rules, along with components that are layered in order to enhance safety-critical behavior, must also be considered.

(f) *How are processor-based subsystems/components assessed?* (1) An MTTHE value must be calculated for each processor-based subsystem or component, or both, indicating the safety-critical behavior of the integrated hardware/software subsystem or component, or both. The human factor impact must be included in the assessment, whenever applicable, to provide an integrated MTTHE value. The MTTHE calculation must consider the rates of failures caused by permanent, transient, and intermittent faults accounting for the fault coverage of the integrated hardware/software subsystem or component, phased-interval maintenance, and restoration of the detected failures.

(2) MTTHE compliance verification and validation must be based on the assessment of the design for verification and validation process, historical performance data, analytical methods and experimental safety-critical performance testing performed on the subsystem or component. The compliance process must be demonstrated to be compliant and consistent with the MTTHE metric and demonstrated to have a high degree of confidence.

(g) *How are non-processor-based subsystems/components assessed?* (1) The safety-critical behavior of all non-processor-based components, which are part of a processor-based system or subsystem, must be quantified with an MTTHE metric. The MTTHE assessment methodology must consider failures caused by permanent, transient, and intermittent faults, phase-interval maintenance and restoration of failures and the effect of fault coverage of each non-processor-based subsystem or component.

(2) MTTHE compliance verification and validation must be based on the assessment of the design for verification and validation process, historical performance data, analytical methods and experimental safety-critical performance testing performed on the subsystem or component. The non-processor-based quantification compliance must be demonstrated to have a high degree of confidence.

(h) *What assumptions must be documented?* (1) The railroad shall document any assumptions regarding the reliability or availability of mechanical, electric, or electronic components. Such assumptions must include MTTF projections, as well as Mean Time to Repair (MTTR) projections, unless the risk assessment specifically explains why these assumptions are not relevant to the risk assessment. The railroad shall document these assumptions in such a form as to permit later automated comparisons with in-service experience (*e.g.*, a spreadsheet).

(2) The railroad shall document any assumptions regarding human performance. The documentation shall be in such a form as to facilitate later comparisons with in-service experience.

(3) The railroad shall document any assumptions regarding software defects. These assumptions shall be in a form which permits the railroad to project the likelihood of detecting an in-service software defect. These assumptions shall be documented in such a form as to permit later automated comparisons with in-service experience.

(4) The railroad shall document all of the identified safety-critical fault paths. The documentation shall be in such a form as to facilitate later comparisons with in-service faults.

[70 FR 11105, Mar. 7, 2005]

APPENDIX C TO PART 236—SAFETY ASSURANCE CRITERIA AND PROCESSES

(a) *What is the purpose of this appendix?* This appendix seeks to promote full disclosure of safety risk to facilitate minimizing or eliminating elements of risk where practicable by providing minimum criteria and processes for safety analyses conducted in support of PSPs. The analysis required by this appendix is intended to minimize the probability of failure to an acceptable level, helping to optimize the safety of the product within the limitations of the available engineering science, cost, and other constraints. FRA uses the criteria and processes set forth

in this appendix to evaluate analyses, assumptions, and conclusions provided in RSPP and PSP documents. An analysis performed under this appendix must:

(1) Address each area of paragraph (b) of this appendix, explaining how such objectives are addressed or why they are not relevant, and

(2) Employ a validation and verification process pursuant to paragraph (c) of this appendix.

(b) *What categories of safety elements must be addressed?* The designer shall address each of the following safety considerations when designing and demonstrating the safety of products covered by subpart H of this part. In the event that any of these principles are not followed, the PSP shall state both the reason(s) for departure and the alternative(s) utilized to mitigate or eliminate the hazards associated with the design principle not followed.

(1) *Normal operation*. The system (including all hardware and software) must demonstrate safe operation with no hardware failures under normal anticipated operating conditions with proper inputs and within the expected range of environmental conditions. All safety-critical functions must be performed properly under these normal conditions. Absence of specific operator actions or procedures will not prevent the system from operating safely. There must be no hazards that are categorized as unacceptable or undesirable. Hazards categorized as unacceptable must be eliminated by design.

(2) *Systematic failure*. It must be shown how the product is designed to mitigate or eliminate unsafe systematic failures—those conditions which can be attributed to human error that could occur at various stages throughout product development. This includes unsafe errors in the software due to human error in the software specification, design or coding phases, or both; human errors that could impact hardware design; unsafe conditions that could occur because of an improperly designed human-machine interface; installation and maintenance errors; and errors associated with making modifications.

(3) *Random failure*. (i) The product must be shown to operate safely under conditions of random hardware failure. This includes single as well as multiple hardware failures, particularly in instances where one or more failures could occur, remain undetected (latent) and react in combination with a subsequent failure at a later time to cause an unsafe operating situation. In instances involving a latent failure, a subsequent failure is similar to there being a single failure. In the event of a transient failure, and if so designed, the system should restart itself if it is safe to do so. Frequency of attempted restarts must be considered in the hazard analysis required by §236.907(a)(8).

(ii) There shall be no single point failures in the product that can result in hazards categorized as unacceptable or undesirable. Occurrence of credible single point failures that can result in hazards must be detected and the product must achieve a known safe state before falsely activating any physical appliance.

(iii) If one non-self-revealing failure combined with a second failure can cause a hazard that is categorized as unacceptable or undesirable, then the second failure must be detected and the product must achieve a known safe state before falsely activating any physical appliance.

(4) *Common Mode failure*. Another concern of multiple failure involves common mode failures in which two or more subsystems or components intended to compensate one another to perform the same function all fail by the same mode and result in unsafe conditions. This is of particular concern in instances in which two or more elements (hardware or software, or both) are used in combination to ensure safety. If a common mode failure exists, then any analysis performed under this appendix cannot rely on the assumption that failures are independent. Examples include: the use of redundancy in which two or more elements perform a given function in parallel and when one (hardware or software) element checks/monitors another element (of hardware or software) to help ensure its safe operation. Common mode failure relates to independence, which must be ensured in these instances. When dealing with the effects of hardware failure, the designer shall address the effects of the failure not only on other hardware, but also on the execution of the software, since hardware failures can greatly affect how the software operates.

(5) *External influences*. The product must be shown to operate safely when subjected to different external influences, including:

(i) Electrical influences such as power supply anomalies/transients, abnormal/improper input conditions (*e.g.*, outside of normal range inputs relative to amplitude and frequency, unusual combinations of inputs) including those related to a human operator, and others such as electromagnetic interference or electrostatic discharges, or both;

(ii) Mechanical influences such as vibration and shock; and

(iii) Climatic conditions such as temperature and humidity.

(6) *Modifications*. Safety must be ensured following modifications to the hardware or software, or both. All or some of the concerns identified in this paragraph may be applicable depending upon the nature and extent of the modifications.

(7) *Software*. Software faults must not cause hazards categorized as unacceptable or undesirable.

(8) *Closed Loop Principle*. The product design must require positive action to be taken in a prescribed manner to either begin product operation or continue product operation.

(9) *Human Factors Engineering:* The product design must sufficiently incorporate human factors engineering that is appropriate to the complexity of the product; the educational, mental, and physical capabilities of the intended operators and maintainers; the degree of required human interaction with the component; and the environment in which the product will be used.

(c) *What standards are acceptable for verification and validation?* (1) The standards employed for verification or validation, or both, of products subject to this subpart must be sufficient to support achievement of the applicable requirements of subpart H of this part.

(2) U.S. Department of Defense Military Standard (MIL-STD) 882C, ''System Safety Program Requirements'' (January 19, 1993), is recognized as providing appropriate risk analysis processes for incorporation into verification and validation standards.

(3) The following standards designed for application to processor-based signal and train control systems are recognized as acceptable with respect to applicable elements of safety analysis required by subpart H of this part. The latest versions of the standards listed below should be used unless otherwise provided.

(i) IEEE 1483–2000, Standard for the Verification of Vital Functions in Processor-Based Systems Used in Rail Transit Control.

(ii) CENELEC Standards as follows:

(A) EN50126: 1999, Railway Applications: Specification and Demonstration of Reliability, Availability, Maintainability and Safety (RAMS);

(B) EN50128 (May 2001), Railway Applications: Software for Railway Control and Protection Systems;

(C) EN50129: 2003, Railway Applications: Communications, Signaling, and Processing Systems-Safety Related Electronic Systems for Signaling; and

(D) EN50155:2001/A1:2002, Railway Applications: Electronic Equipment Used in Rolling Stock.

(iii) ATCS Specification 140, Recommended Practices for Safety and Systems Assurance.

(iv) ATCS Specification 130, Software Quality Assurance.

(v) AAR-AREMA 2005 Communications and Signal Manual of Recommended Practices, Part 17.

(vi) Safety of High Speed Ground Transportation Systems. Analytical Methodology for Safety Validation of Computer Controlled Subsystems. Volume II: Development of a Safety Validation Methodology. Final Report September 1995. Author: Jonathan F. Luedeke, Battelle. DOT/FRA/ORD–95/10.2.

(vii) IEC 61508 (International Electrotechnical Commission), Functional Safety of Electrical/Electronic/Programmable/Electronic Safety (E/E/P/ES) Related Systems, Parts 1–7 as follows:

(A) IEC 61508–1 (1998–12) Part 1: General requirements and IEC 61508–1 Corr. (1999–05) Corrigendum 1-Part 1:General Requirements.

(B) IEC 61508–2 (2000–05) Part 2: Requirements for electrical/electronic/programmable electronic safety-related systems.

(C) IEC 61508–3 (1998–12) Part 3: Software requirements and IEC 61508–3 Corr.1(1999–04) Corrigendum 1-Part3: Software requirements.

(D) IEC 61508–4 (1998–12) Part 4: Definitions and abbreviations and IEC 61508–4 Corr.1(1999–04) Corrigendum 1-Part 4: Definitions and abbreviations.

(E) IEC 61508–5 (1998–12) Part 5: Examples of methods for the determination of safety integrity levels and IEC 61508–5 Corr.1 (1999–04) Corrigendum 1 Part 5: Examples of methods for determination of safety integrity levels.

(F) IEC 61508–6 (2000–04) Part 6: Guidelines on the applications of IEC 61508–2 and –3.

(G) IEC 61508–7 (2000–03) Part 7: Overview of techniques and measures.

(4) Use of unpublished standards, including proprietary standards, is authorized to the extent that such standards are shown to achieve the requirements of this part. However, any such standards shall be available for inspection and replication by FRA and for public examination in any public proceeding before the FRA to which they are relevant.

[70 FR 11106, Mar. 7, 2005]

APPENDIX D TO PART 236—INDEPENDENT REVIEW OF VERIFICATION AND VALIDATION

(a) *What is the purpose of this appendix?* This appendix provides minimum requirements for independent third-party assessment of product safety verification and validation pursuant to subpart H of this part. The goal of this assessment is to provide an independent evaluation of the product manufacturer's utilization of safety design practices during the product's development and testing phases, as required by the applicable railroad's RSPP, the product PSP, the requirements of subpart H of this part, and any other previously agreed-upon controlling documents or standards.

(b) *What general requirements apply to the conduct of third party assessments?* (1) The supplier may request advice and assistance of the reviewer concerning the actions identified in paragraphs (c) through (g) of this appendix. However, the reviewer should not engage in design efforts, in order to preserve the reviewer's independence and maintain

the supplier's proprietary right to the product.

(2) The supplier shall provide the reviewer access to any and all documentation that the reviewer requests and attendance at any design review or walkthrough that the reviewer determines as necessary to complete and accomplish the third party assessment. The reviewer may be accompanied by representatives of FRA as necessary, in FRA's judgment, for FRA to monitor the assessment.

(c) *What must be done at the preliminary level?* The reviewer shall evaluate with respect to safety and comment on the adequacy of the processes which the supplier applies to the design and development of the product. At a minimum, the reviewer shall compare the supplier processes with acceptable methodology and employ any other such tests or comparisons if they have been agreed to previously with FRA. Based on these analyses, the reviewer shall identify and document any significant safety vulnerabilities which are not adequately mitigated by the supplier's (or user's) processes. Finally, the reviewer shall evaluate the adequacy of the railroad's RSPP, the PSP, and any other documents pertinent to the product being assessed.

(d) *What must be done at the functional level?* (1) The reviewer shall analyze the Preliminary Hazard Analysis (PHA) for comprehensiveness and compliance with the railroad's RSPP.

(2) The reviewer shall analyze all Fault Tree Analyses (FTA), Failure Mode and Effects Criticality Analysis (FMECA), and other hazard analyses for completeness, correctness, and compliance with the railroad's RSPP.

(e) *What must be done at the implementation level?* The reviewer shall randomly select various safety-critical software modules for audit to verify whether the requirements of the RSPP were followed. The number of modules audited must be determined as a representative number sufficient to provide confidence that all unaudited modules were developed in compliance with the RSPP.

(f) *What must be done at closure?* (1) The reviewer shall evaluate and comment on the plan for installation and test procedures of the product for revenue service.

(2) The reviewer shall prepare a final report of the assessment. The report shall be submitted to the railroad prior to the commencement of installation testing and contain at least the following information:

(i) Reviewer's evaluation of the adequacy of the PSP, including the supplier's MTTHE and risk estimates for the product, and the supplier's confidence interval in these estimates;

(ii) Product vulnerabilities which the reviewer felt were not adequately mitigated, including the method by which the railroad would assure product safety in the event of a hardware or software failure (*i.e.*, how does the railroad assure that all potentially hazardous failure modes are identified?) and the method by which the railroad addresses comprehensiveness of the product design for the requirements of the operations it will govern (*i.e.*, how does the railroad assure that all potentially hazardous operating circumstances are identified? Who records any deficiencies identified in the design process? Who tracks the correction of these deficiencies and confirms that they are corrected?);

(iii) A clear statement of position for all parties involved for each product vulnerability cited by the reviewer;

(iv) Identification of any documentation or information sought by the reviewer that was denied, incomplete, or inadequate;

(v) A listing of each RSPP procedure or process which was not properly followed;

(vi) Identification of the software verification and validation procedures for the product's safety-critical applications, and the reviewer's evaluation of the adequacy of these procedures;

(vii) Methods employed by the product manufacturer to develop safety-critical software, such as use of structured language, code checks, modularity, or other similar generally acceptable techniques; and

(viii) Method by which the supplier or railroad addresses comprehensiveness of the product design which considers the safety elements listed in paragraph (b) of appendix C to this part.

[70 FR 11107, Mar. 7, 2005]

APPENDIX E TO PART 236—HUMAN-MACHINE INTERFACE (HMI) DESIGN

(a) *What is the purpose of this appendix?* The purpose of this appendix is to provide HMI design criteria which will minimize negative safety effects by causing designers to consider human factors in the development of HMIs.

(b) *What is meant by ''designer'' and ''operator''?* As used in this section, ''designer'' means anyone who specifies requirements for—or designs a system or subsystem, or both, for—a product subject to subpart H of this part, and ''operator'' means any human who is intended to receive information from, provide information to, or perform repairs or maintenance on a signal or train control product subject to subpart H of this part.

(c) *What kinds of human factors issues must designers consider with regard to the general function of a system?*—(1) *Reduced situational awareness and over-reliance.* HMI design must give an operator active functions to perform, feedback on the results of the operator's actions, and information on the automatic functions of the system as well as its performance. The operator must be ''in-the-

loop.'' Designers shall consider at minimum the following methods of maintaining an active role for human operators:

(i) The system must require an operator to initiate action to operate the train and require an operator to remain ''in-the-loop'' for at least 30 minutes at a time;

(ii) The system must provide timely feedback to an operator regarding the system's automated actions, the reasons for such actions, and the effects of the operator's manual actions on the system;

(iii) The system must warn operators in advance when they require an operator to take action; and

(iv) HMI design must equalize an operator's workload.

(2) *Expectation of predictability and consistency in product behavior and communications.* HMI design must accommodate an operator's expectation of logical and consistent relationships between actions and results. Similar objects must behave consistently when an operator performs the same action upon them.

(3) *Limited memory and ability to process information.* (i) HMI design must minimize an operator's information processing load. To minimize information processing load, the designer shall:

(A) Present integrated information that directly supports the variety and types of decisions that an operator makes;

(B) Provide information in a format or representation that minimizes the time required to understand and act; and

(C) Conduct utility tests of decision aids to establish clear benefits such as processing time saved or improved quality of decisions.

(ii) HMI design must minimize the load on an operator's memory.

(A) To minimize short-term memory load, the designer shall integrate data or information from multiple sources into a single format or representation (''chunking'') and design so that three or fewer ''chunks'' of information need to be remembered at any one time.

(B) To minimize long-term memory load, the designer shall design to support recognition memory, design memory aids to minimize the amount of information that must be recalled from unaided memory when making critical decisions, and promote active processing of the information.

(4) *Miscellaneous Human Factors Concerns.* System designers shall:

(i) Design systems that anticipate possible user errors and include capabilities to catch errors before they propagate through the system;

(ii) Conduct cognitive task analyses prior to designing the system to better understand the information processing requirements of operators when making critical decisions; and

(iii) Present information that accurately represents or predicts system states.

(d) *What kinds of HMI design elements must a designer incorporate in the development of on-board train displays and controls?*—(1) *Location of displays and controls.* Designers shall:

(i) Locate displays as close as possible to the controls that affect them;

(ii) Locate displays and controls based on an operator's position;

(iii) Arrange controls to minimize the need for the operator to change position;

(iv) Arrange controls according to their expected order of use;

(v) Group similar controls together;

(vi) Design for high stimulus-response compatibility (geometric and conceptual);

(vii) Design safety-critical controls to require more than one positive action to activate (*e.g.*, auto stick shift requires two movements to go into reverse); and

(viii) Design controls to allow easy recovery from error.

(2) *Information management.* HMI design must:

(i) Display information in a manner which emphasizes its relative importance;

(ii) Comply with the ANSI/HFS 100–1988 standard;

(iii) Design for display luminance of the foreground or background of at least 35 cd/m^2 (the displays should be capable of a minimum contrast 3:1 with 7:1 preferred, and controls should be provided to adjust the brightness level and contrast level);

(iv) Design the interface to display only the information necessary to the user;

(v) Where text is needed, using short, simple sentences or phrases with wording that an operator will understand;

(vi) Use complete words where possible; where abbreviations are necessary, choose a commonly accepted abbreviation or consistent method and select commonly used terms and words that the operator will understand;

(vii) Adopt a consistent format for all display screens by placing each design element in a consistent and specified location;

(viii) Display critical information in the center of the operator's field of view by placing items that need to be found quickly in the upper left hand corner and items which are not time-critical in the lower right hand corner of the field of view;

(ix) Group items that belong together;

(x) Design all visual displays to meet human performance criteria under monochrome conditions and add color only if it will help the user in performing a task, and use color coding as a redundant coding technique;

(xi) Limit the number of colors over a group of displays to no more than seven;

(xii) Design warnings to match the level of risk or danger with the alerting nature of the signal;

(xiii) With respect to information entry, avoid full QWERTY keyboards for data entry; and

(xiv) Use digital communications for safety-critical messages between the locomotive engineer and the dispatcher.

(e) *What kinds of HMI design elements must a designer consider with respect to problem management?* (1) HMI design must enhance an operator's situation awareness. An operator must have access to:

(i) Knowledge of the operator's train location relative to relevant entities;

(ii) Knowledge of the type and importance of relevant entities;

(iii) Understanding of the evolution of the situation over time;

(iv) Knowledge of the roles and responsibilities of relevant entities; and

(v) Knowledge of expected actions of relevant entities.

(2) HMI design must support response selection and scheduling.

(3) HMI design must support contingency planning.

[70 FR 11107, Mar. 7, 2005]

PART 238—PASSENGER EQUIPMENT SAFETY STANDARDS

Subpart A—General

Sec.
238.1 Purpose and scope.
238.3 Applicability.
238.5 Definitions.
238.7 Waivers.
238.9 Responsibility for compliance.
238.11 Penalties.
238.13 Preemptive effect.
238.15 Movement of passenger equipment with power brake defects.
238.17 Movement of passenger equipment with other than power brake defects.
238.19 Reporting and tracking of repairs to defective passenger equipment.
238.21 Special approval procedure.
238.23 Information collection.

Subpart B—Safety Planning and General Requirements

238.101 Scope.
238.103 Fire safety.
238.105 Train electronic hardware and software safety.
238.107 Inspection, testing, and maintenance plan.
238.109 Training, qualification, and designation program.
238.111 Pre-revenue service acceptance testing plan.
238.113 Emergency window exits.
238.114 Rescue access windows.
238.115 Emergency lighting.
238.117 Protection against personal injury.
238.119 Rim-stamped straight-plate wheels.
238.121 Emergency communication.
238.123 Emergency roof access.
FIGURE 1 TO SUBPART B OF PART 238—EXAMPLE OF LOCATION AND STAGGERING OF EMERGENCY WINDOW EXITS—§ 238.113
FIGURE 1A TO SUBPART B OF PART 238—EXAMPLE OF LOCATION OF RESCUE ACCESS WINDOWS—§ 238.114
FIGURE 1B TO SUBPART B OF PART 238—EXAMPLE OF LOCATION AND STAGGERING OF EMERGENCY WINDOW EXITS AND LOCATION OF RESCUE ACCESS WINDOWS—§§ 238.113 AND 238.114
FIGURE 1C TO SUBPART B OF PART 238—EXAMPLE OF A PASSENGER COMPARTMENT INCLUDING A VESTIBULE CONNECTED BY AN OPEN PASSAGEWAY AND EXCLUDING A VESTIBULE SEPARATED BY AN INTERIOR DOOR—§§ 238.113 AND 238.114
FIGURE 2 TO SUBPART B OF PART 238—EXAMPLE OF A MULTI-LEVEL CAR COMPLYING WITH WINDOW LOCATION AND STAGGERING REQUIREMENTS—§§ 238.113 AND 238.114
FIGURE 2A TO SUBPART B OF PART 238—EXAMPLE OF AN INTERMEDIATE LEVEL SEATING AREA OF A MULTI-LEVEL CAR COMPLYING WITH WINDOW LOCATION REQUIREMENTS—§§ 238.113 AND 238.114
FIGURE 2B TO SUBPART B OF PART 238—EXAMPLE OF AN INTERMEDIATE LEVEL SEATING AREA OF A MULTI-LEVEL CAR COMPLYING WITH WINDOW LOCATION REQUIREMENTS—§§ 238.113 AND 238.114
FIGURE 3 TO SUBPART B OF PART 238—EXAMPLE OF LOCATION AND MARKING OF STRUCTURAL WEAK POINTS ON ROOF OF PASSENGER CAR—§ 238.123

Subpart C—Specific Requirements for Tier I Passenger Equipment

238.201 Scope/alternative compliance.
238.203 Static end strength.
238.205 Anti-climbing mechanism.
238.207 Link between coupling mechanism and car body.
238.209 Forward-facing end structure of locomotives.
238.211 Collision posts.
238.213 Corner posts.
238.215 Rollover strength.
238.217 Side structure.
238.219 Truck-to-car-body attachment.
238.221 Glazing.
238.223 Locomotive fuel tanks.
238.225 Electrical system.
238.227 Suspension system.
238.229 Safety appliances—general.
238.230 Safety appliances—new equipment.
238.231 Brake system.
238.233 Interior fittings and surfaces.
238.235 Doors.

238.237 Automated monitoring.

Subpart D—Inspection, Testing, and Maintenance Requirements for Tier I Passenger Equipment

238.301 Scope.
238.303 Exterior calendar day mechanical inspection of passenger equipment.
238.305 Interior calendar day mechanical inspection of passenger cars.
238.307 Periodic mechanical inspection of passenger cars and unpowered vehicles used in passenger trains.
238.309 Periodic brake equipment maintenance.
238.311 Single car test.
238.313 Class I brake test.
238.315 Class IA brake test.
238.317 Class II brake test.
238.319 Running brake test.
238.321 Out-of-service credit.

Subpart E—Specific Requirements for Tier II Passenger Equipment

238.401 Scope.
238.403 Crash energy management.
238.405 Longitudinal static compressive strength.
238.407 Anti-climbing mechanism.
238.409 Forward end structures of power car cabs.
238.411 Rear end structures of power car cabs.
238.413 End structures of trailer cars.
238.415 Rollover strength.
238.417 Side loads.
238.419 Truck-to-car-body and truck component attachment.
238.421 Glazing.
238.423 Fuel tanks.
238.425 Electrical system.
238.427 Suspension system.
238.429 Safety appliances.
238.431 Brake system.
238.433 Draft system.
238.435 Interior fittings and surfaces.
238.437 [Reserved]
238.439 Doors.
238.441 Emergency roof access.
238.443 Headlights.
238.445 Automated monitoring.
238.447 Train operator's controls and power car cab layout.
FIGURE 1 TO SUBPART E—POWER CAR CAB FORWARD END STRUCTURE CONCEPTUAL IMPLEMENTATION
FIGURE 2 TO SUBPART E—POWER CAR CAB REAR END STRUCTURE CONCEPTUAL IMPLEMENTATION
FIGURE 3 TO SUBPART E—TRAILER CAR END STRUCTURE CONCEPTUAL IMPLEMENTATION
FIGURE 4 TO SUBPART E—TRAILER CAR INBOARD VESTIBULE END STRUCTURE CONCEPTUAL IMPLEMENTATION

Subpart F—Inspection, Testing, and Maintenance Requirements for Tier II Passenger Equipment

238.501 Scope.
238.503 Inspection, testing, and maintenance requirements.
238.505 Program approval procedure.

Subpart G—Specific Safety Planning Requirements for Tier II Passenger Equipment

238.601 Scope.
238.603 Safety planning requirements.
APPENDIX A TO PART 238—SCHEDULE OF CIVIL PENALTIES
APPENDIX B TO PART 238—TEST METHODS AND PERFORMANCE CRITERIA FOR THE FLAMMABILITY AND SMOKE EMISSION CHARACTERISTICS OF MATERIALS USED IN PASSENGER CARS AND LOCOMOTIVE CABS
APPENDIX C TO PART 238—SUSPENSION SYSTEM SAFETY PERFORMANCE STANDARDS
APPENDIX D TO PART 238—REQUIREMENTS FOR EXTERNAL FUEL TANKS ON TIER I LOCOMOTIVES
APPENDIX E TO PART 238—GENERAL PRINCIPLES OF RELIABILITY-BASED MAINTENANCE PROGRAMS

AUTHORITY: 49 U.S.C. 20103, 20107, 20133, 20141, 20302–20303, 20306, 20701–20702, 21301–21302, 21304; 28 U.S.C. 2461, note; and 49 CFR 1.49.

SOURCE: 64 FR 25660, May 12, 1999, unless otherwise noted.

Subpart A—General

§ 238.1 Purpose and scope.

(a) The purpose of this part is to prevent collisions, derailments, and other occurrences involving railroad passenger equipment that cause injury or death to railroad employees, railroad passengers, or the general public; and to mitigate the consequences of such occurrences to the extent they cannot be prevented.

(b) This part prescribes minimum Federal safety standards for railroad passenger equipment. This part does not restrict a railroad from adopting and enforcing additional or more stringent requirements not inconsistent with this part.

(c) Railroads to which this part applies shall be responsible for compliance with all of the requirements contained in §§ 238.15, 238.17, 238.19, 238.107, 238.109, and subpart D of this part effective January 1, 2002.

(1) A railroad may request earlier application of the requirements contained in §§ 238.15, 238.17, 238.19, 238.107, 238.109, and subpart D upon written notification to FRA's Associate Administrator for Safety. Such a request shall indicate the railroad's readiness and ability to comply with all of the provisions referenced in paragraph (c) introductory text of this section.

(2) Except for paragraphs (b) and (c) of § 238.309, a railroad may specifically request earlier application of the maintenance and testing provisions contained in §§ 238.309 and 238.311 simultaneously. In order to request earlier application of these two sections, the railroad shall indicate its readiness and ability to comply with all of the provisions contained in both of those sections.

(3) Paragraphs (b) and (c) of § 238.309 apply beginning September 9, 1999.

[64 FR 25660, May 12, 1999, as amended at 65 FR 41305, July 3, 2000; 67 FR 19989, Apr. 23, 2002]

§ 238.3 Applicability.

(a) Except as provided in paragraph (c) of this section, this part applies to all:

(1) Railroads that operate intercity or commuter passenger train service on standard gage track which is part of the general railroad system of transportation; and

(2) Railroads that provide commuter or other short-haul rail passenger train service in a metropolitan or suburban area as described by 49 U.S.C. 20102(1), including public authorities operating passenger train service.

(b) Railroads that permit to be used or hauled on their lines passenger equipment subject to this part, in violation of a power brake provision of this part or a safety appliance provision of this part, are subject to the power brake and safety appliance provisions of this part with respect to such operations.

(c) This part does not apply to:

(1) Rapid transit operations in an urban area that are not connected to the general railroad system of transportation;

(2) A railroad that operates only on track inside an installation that is not part of the general railroad system of transportation;

(3) Tourist, scenic, historic, or excursion operations, whether on or off the general railroad system of transportation; or

(4) Circus trains.

§ 238.5 Definitions.

As used in this part—

AAR means the Association of American Railroads.

APTA means the American Public Transit Association.

Actuator means a self-contained brake system component that generates the force to apply the brake shoe or brake pad to the wheel or disc. An actuator typically consists of a cylinder, piston, and piston rod.

Administrator means the Administrator of the Federal Railroad Administration or the Administrator's delegate.

Alerter means a device or system installed in the locomotive cab to promote continuous, active locomotive engineer attentiveness by monitoring select locomotive engineer-induced control activities. If fluctuation of a monitored locomotive engineer-induced control activity is not detected within a predetermined time, a sequence of audible and visual alarms is activated so as to progressively prompt a response by the locomotive engineer. Failure by the locomotive engineer to institute a change of state in a monitored control, or acknowledge the alerter alarm activity through a manual reset provision, results in a penalty brake application that brings the locomotive or train to a stop.

Anti-climbing mechanism means the parts at the ends of adjoining vehicles in a train that are designed to engage when subjected to large buff loads to prevent the override of one vehicle by another.

Bind means restrict the intended movement of one or more brake system components by obstruction, increased friction, or reduced clearance.

Block of cars means one car or multiple cars in a solid unit coupled together for the purpose of being added to, or removed from, a train as a solid unit.

Brake, air or *power brake* means a combination of devices operated by compressed air, arranged in a system, and controlled manually, electrically, or pneumatically, by means of which the motion of a rail car or locomotive is retarded or arrested.

Brake, disc means a retardation system used on some rail vehicles, primarily passenger equipment, that utilizes flat metal discs as the braking surface instead of the wheel tread.

Brake, dynamic means a train braking system whereby the kinetic energy of a moving train is used to generate electric current at the locomotive traction motors, which is then dissipated through banks of resistor grids or back into the catenary or third rail system.

Brake, effective means a brake that is capable of producing its required designed retarding force on the train. A brake is not effective if its piston travel is in excess of the maximum prescribed limits. On vehicles equipped with nominal 12-inch stroke brake cylinders, the brake is not effective if its piston travel exceeds 10½ inches.

Brake indicator means a device, actuated by brake cylinder pressure, which indicates whether brakes are applied or released.

Brake, inoperative means a primary brake that, for any reason, no longer applies or releases as intended or is otherwise ineffective.

Brake, on-tread friction means a braking system that uses a brake shoe that acts on the tread of the wheel to retard the vehicle.

Brake, parking or *hand brake* means a brake that can be applied and released by hand to prevent movement of a stationary rail car or locomotive.

Brake pipe means the system of piping (including branch pipes, angle cocks, cutout cocks, dirt collectors, hoses, and hose couplings) used for connecting locomotives and all rail cars for the passage of air to control the locomotive and car brakes.

Brake, power means ''air brake'' as that term is defined in this section.

Brake, primary means those components of the train brake system necessary to stop the train within the signal spacing distance without thermal damage to friction braking surfaces.

Brake, secondary means those components of the train brake system which develop supplemental brake retarding force that is not needed to stop the train within signal spacing distances or to prevent thermal damage to friction braking surfaces.

Brake shoes or pads aligned with tread or disc means that the surface of the brake shoe or pad, respectively, engages the surface of the wheel tread or disc, respectively, to prevent localized thermal stress.

Braking system, blended means a braking system where the primary brake and one or more secondary brakes are automatically combined to stop the train. If the secondary brakes are unavailable, the blended brake uses the primary brake alone to stop the train.

Calendar day means a time period running from one midnight to the next midnight on a given date.

Class I brake test means a complete passenger train brake system test and inspection (as further specified in § 238.313) performed by a qualified maintenance person to ensure that the air brake system is 100 percent effective.

Class IA brake test means a test and inspection (as further specified in § 238.315) performed by a qualified person of the air brake system on each car in a passenger train to ensure that the brakes apply and release on each car in the train in response to train line commands.

Class II brake test means a test and inspection (as further specified in § 238.317) performed by a qualified person of brake pipe integrity and continuity from the controlling locomotive to the rear unit of a passenger train.

Collision posts means structural members of the end structures of a vehicle that extend vertically from the underframe to which they are securely attached and that provide protection to occupied compartments from an object penetrating the vehicle during a collision.

Control valves means that part of the air brake equipment on each rail car or locomotive that controls the charging, application, and release of the air brakes, in response to train line commands.

Corner posts means structural members located at the intersection of the front or rear surface with the side surface of a rail vehicle and which extend vertically from the underframe to the roof. Corner posts may be combined with collision posts to become part of the end structure.

Crack means a fracture without complete separation into parts, except that, in a casting, a shrinkage crack or hot tear that does not significantly diminish the strength of the member is not a crack.

Crash energy management means an approach to the design of rail passenger equipment which controls the dissipation of energy during a collision to protect the occupied volumes from crushing and to limit the decelerations on passengers and crewmembers in those volumes. This may be accomplished by designing energy-absorbing structures of low strength in the unoccupied volumes of a rail vehicle or passenger train to collapse in a controlled manner, while providing higher structural strength in the occupied volumes. Energy deflection can also be part of a crash energy management approach. Crash energy management can be used to help provide anti-climbing resistance and to reduce the risk of train buckling during a collision.

Crash refuge means a volume with structural strength designed to maximize the survivability of crewmembers stationed in the locomotive cab during a collision.

Crewmember means a railroad employee called to perform service covered by the Federal hours of service laws at 49 U.S.C. 21103 and subject to the railroad's operating rules and program of operational tests and inspections required in § 217.9 and § 217.11 of this chapter.

Critical buckling stress means the minimum stress necessary to initiate buckling of a structural member.

Dual-function window means a window that is intended to serve as both an emergency window exit and a rescue access window and that meets the applicable requirements set forth in both §§ 238.113 and 238.114.

Emergency brake application means an irretrievable brake application resulting in the maximum retarding force available from the train brake system.

Emergency responder means a member of a police or fire department, or other organization involved with public safety charged with providing or coordinating emergency services, who responds to a passenger train emergency.

Emergency window means the segment of a side-facing glazing panel that has been designed to permit rapid and easy removal from inside a passenger car in an emergency situation.

End structure means the main support structure projecting upward from the underframe of a locomotive, passenger car, or other rail vehicle. The end structure is securely attached to the underframe at each end of a rail vehicle.

50th-percentile adult male means a person weighing 164 pounds (plus or minus 3 pounds) and possessing the following dimensions: erect sitting height: 35.7 inches (plus or minus 0.1 inch); hip breadth (sitting): 14.7 inches (plus or minus 0.7 inch); hip circumference (sitting): 42 inches; waist circumference (sitting): 32 inches (plus or minus 0.6 inch); chest depth: 9.3 inches (plus or minus 0.2 inch); and chest circumference: 37.4 inches (plus or minus 0.6 inch).

Foul means restrict the intended movement of one or more brake system components because the component is snagged, entangled, or twisted.

FRA means the Federal Railroad Administration.

Fuel tank, external means a fuel containment vessel that extends outside the car body structure of a locomotive.

Fuel tank, internal means a fuel containment vessel that does not extend outside the car body structure of a locomotive.

Full-height collision post, corner post, or side frame post means any vertical framing member in the rail car body structure that spans the distance between the underframe and the roof at the car body section where the post is located. For collision posts located at the approximate third points laterally

of an end frame, the term ''full-height'' applies to posts that extend and connect to supporting structural members in the roof at the location of the posts, or to a beam connected to the top of the end-frame and supported by the roof rails (or anti-telescoping plate), or to both.

Full service application means a brake application which results in a brake cylinder pressure at the service limiting valve setting or equivalent.

Glazing, end-facing means a glazing panel located where a line perpendicular to the exterior surface of the panel makes an angle of 50 degrees or less with the longitudinal center line of the rail vehicle in which the panel is installed. A glazing panel that curves so as to meet the definition for both side-facing and end-facing glazing is considered end-facing glazing.

Glazing, exterior means a glazing panel that is an integral part of the exterior skin of a rail vehicle and has a surface exposed to the outside environment.

Glazing, side-facing means a glazing panel located where a line perpendicular to the exterior surface of the panel makes an angle of more than 50 degrees with the longitudinal center line of the rail vehicle in which the panel is installed.

Handrails means safety appliances installed on either side of a rail vehicle's exterior doors to assist passengers and crewmembers to safely board and depart the vehicle.

Head end power means power generated on board the locomotive of a passenger train used for purposes other than propelling the train, such as cooking, heating, illumination, ventilation and air conditioning.

In passenger service/in revenue service means a train or passenger equipment that is carrying, or available to carry, passengers. Passengers need not have paid a fare in order for the equipment to be considered in passenger or in revenue service.

In service, when used in connection with passenger equipment, means:

(1) Passenger equipment subject to this part that is in passenger or revenue service in the United States; and

(2) All other passenger equipment subject to this part in the United States, unless the passenger equipment:

(i) Is being handled in accordance with §§ 238.15, 238.17, 238.305(d), or 238.503(f), as applicable;

(ii) Is in a repair shop or on a repair track;

(iii) Is on a storage track and is not carrying passengers; or

(iv) Has been delivered in interchange but has not been accepted by the receiving railroad.

Intercom means a device through which voice communication is transmitted and received.

Intercom system means a two-way, voice communication system.

Interior fitting means any component in the passenger compartment which is mounted to the floor, ceiling, sidewalls, or end walls and projects into the passenger compartment more than 25 mm (1 in.) from the surface or surfaces to which it is mounted. Interior fittings do not include side and end walls, floors, door pockets, or ceiling lining materials, for example.

Intermediate level means a level of a multi-level passenger car that is used for passenger seating and is normally located between two main levels. An intermediate level normally contains two, separate seating areas, one at each end of the car, and is normally connected to each main level by stairs.

Lateral means the horizontal direction perpendicular to the direction of travel.

Locomotive means a piece of on-track rail equipment, other than hi-rail, specialized maintenance, or other similar equipment, which may consist of one or more units operated from a single control stand with one or more propelling motors designed for moving other passenger equipment; with one or more propelling motors designed to transport freight or passenger traffic, or both; or without propelling motors but with one or more control stands. This term does not include a locomotive propelled by steam power unless it is used to haul an intercity or commuter passenger train. Nor does this term include a freight locomotive when used to haul a passenger train due to failure of a passenger locomotive.

Locomotive cab means the compartment or space on board a locomotive

where the control stand is located and which is normally occupied by the engineer when the locomotive is operated.

Locomotive, cab car means rail rolling equipment intended to provide transportation for members of the general public that is without propelling motors but equipped with one or more control stands.

Locomotive, controlling means the locomotive from which the locomotive engineer exercises control over the train.

Locomotive, MU means rail rolling equipment self-propelled by any power source and intended to provide transportation for members of the general public; however, this term does not include an MU locomotive propelled by steam power unless it is used to haul an intercity or commuter passenger train.

Longitudinal means in a direction parallel to the normal direction of travel.

Luminescent material means material that absorbs light energy when ambient levels of light are high and emits this stored energy when ambient levels of light are low, making the material appear to glow in the dark.

L/V ratio means the ratio of the lateral force that any wheel exerts on an individual rail to the vertical force exerted by the same wheel on the rail.

Main level means a level of a passenger car that contains a passenger compartment whose length is equal to or greater than half the length of the car.

MIL-STD–882 means a military standard issued by the United States Department of Defense to provide uniform requirements for developing and implementing a system safety plan and program to identify and then eliminate the hazards of a system or reduce the associated risk to an acceptable level.

Mph means miles per hour.

95th-percentile adult male means, except as used in § 238.447(f)(2), a person weighing 215 pounds and possessing the following dimensions: erect sitting height: 38 inches; hip breadth (sitting): 16.5 inches; hip circumference (sitting): 47.2 inches; waist circumference (sitting): 42.5 inches; chest depth: 10.5 inches; and chest circumference 44.5 inches.

Occupied volume means the volume of a rail vehicle or passenger train where passengers or crewmembers are normally located during service operation, such as the operating cab and passenger seating and sleeping areas. The entire width of a vehicle's end compartment that contains a control stand is an occupied volume. A vestibule is typically not considered occupied, except when it contains a control stand for use as a control cab.

Ordered, as applied to acquisition of equipment, means that the acquiring entity has given a notice to proceed to manufacture the equipment that represents a firm financial commitment to compensate the manufacturer for the contract price of the equipment or for damages if the order is nullified. Equipment is not ordered if future exercise of a contract option is required to place the remanufacturing process in motion.

Override means to climb over the normal coupling or side buffers and linking mechanism and impact the end of the adjoining rail vehicle or unit above the underframe.

PA system (or *public address system*) means a one-way, voice communication system.

Passenger car means rail rolling equipment intended to provide transportation for members of the general public and includes a self-propelled car designed to carry passengers, baggage, mail, or express. This term includes a passenger coach, cab car, and an MU locomotive. In the context of articulated equipment, ''passenger car'' means that segment of the rail rolling equipment located between two trucks. This term does not include a private car.

Passenger coach means rail rolling equipment intended to provide transportation for members of the general public that is without propelling motors and without a control stand.

Passenger compartment means an area of a passenger car that consists of a seating area and any vestibule that is connected to the seating area by an open passageway.

Passenger equipment—means

(1) All powered and unpowered passenger cars, locomotives used to haul a passenger car, and any other rail rolling equipment used in a train with one or more passenger cars. Passenger equipment includes—

(i) A passenger coach,

(ii) A cab car,

(iii) A MU locomotive,

(iv) A locomotive not intended to provide transportation for a member of the general public that is used to power a passenger train, and

(v) Any non-self-propelled vehicle used in a passenger train, including an express car, baggage car, mail car, freight car, or a private car.

(2) In the context of articulated equipment, ''passenger equipment'' means a segment of rail rolling equipment located between two trucks that is used in a train with one or more passenger cars. This term does not include a freight locomotive when used to haul a passenger train due to failure of a passenger locomotive.

Passenger station means a location designated in a railroad's timetable where passengers are regularly scheduled to get on or off any train.

Permanent deformation means the undergoing of a permanent change in shape of a structural member of a rail vehicle.

Person means an entity of any type covered under 1 U.S.C. 1, including but not limited to the following: a railroad; a manager, supervisor, official, or other employee or agent of a railroad; any owner, manufacturer, lessor, or lessee of railroad equipment, track, or facilities; any independent contractor providing goods or services to a railroad; and any employee of such owner, manufacturer, lessor, lessee, or independent contractor.

Piston travel means the amount of linear movement of the air brake hollow rod (or equivalent) or piston rod when forced outward by movement of the piston in the brake cylinder or actuator and limited by the brake shoes being forced against the wheel or disc.

Piston travel indicator means a device directly activated by the movement of the brake cylinder piston, the disc brake actuator, or the tread brake unit cylinder piston that provides an indication of the piston travel.

Power car means a rail vehicle that propels a Tier II passenger train or is the lead vehicle in a Tier II passenger train, or both.

Pre-revenue service acceptance testing plan means a document, as further specified in § 238.111, prepared by a railroad that explains in detail how pre-revenue service tests of passenger equipment demonstrate that the equipment meets Federal safety standards and the railroad's own safety requirements.

Primary responsibility means the task that a person performs during at least 50 percent of the time that the person is working. The totality of the circumstances will be considered on a case-by-case basis in circumstances where an individual does not spend 50 percent of his or her workday engaged in any one readily identifiable type of activity. Time spent supervising employees engaged in the functions of troubleshooting, inspection, testing, maintenance, or repair of train brake and mechanical components and systems covered by this part shall be considered work which is generally consistent with the function of troubleshooting of such systems and components for the purpose of the definition of this term and the definition of ''Qualified Maintenance Person.''

Private car means rail rolling equipment that is used only for excursion, recreational, or private transportation purposes. A private car is not a passenger car.

Public highway-rail grade crossing means a location where a public highway, road or street, including associated sidewalks or pathways, crosses one or more active railroad tracks at grade.

Qualified maintenance person means a qualified person who has received, as a part of the training, qualification, and designation program required under § 238.109, instruction and training that includes ''hands-on'' experience (under appropriate supervision or apprenticeship) in one or more of the following functions: troubleshooting, inspection, testing, maintenance, or repair of the specific train brake and other components and systems for which the person is assigned responsibility. This person

shall also possess a current understanding of what is required to properly repair and maintain the safety-critical brake or mechanical components for which the person is assigned responsibility. Further, the qualified maintenance person shall be a person whose primary responsibility includes work generally consistent with the above-referenced functions and is designated to:

(1) Conduct Class I brake tests under this part;

(2) Conduct exterior calendar day mechanical inspections on MU locomotives or other passenger cars and unpowered vehicles under this part; or

(3) Determine whether equipment not in compliance with this part may be moved as required by § 238.17.

Qualified person means a person who has received, as a part of the training, qualification, and designation program required under § 238.109, instruction and training necessary to perform one or more functions required under this part. The railroad is responsible for determining that the person has the knowledge and skills necessary to perform the required function for which the person is assigned responsibility. The railroad determines the qualifications and competencies for employees designated to perform various functions in the manner set forth in this part. Although the rule uses the term ''qualified person'' to describe a person responsible for performing various functions required under this part, a person may be deemed qualified to perform some functions but not qualified to perform other functions. For example, although a person may be deemed qualified to perform the Class II brake test required by this part, that same person may or may not be qualified to perform the Class IA brake test or authorize the movement of defective equipment under this part. The railroad will determine the required functions for which an individual will be deemed a ''qualified person'' based upon the instruction and training the individual has received pursuant to § 238.109 on a particular function.

Railroad means any form of nonhighway ground transportation that runs on rails or electromagnetic guideways and any entity providing such transportation, including—

(i) Commuter or other short-haul railroad passenger service in a metropolitan or suburban area and commuter railroad service that was operated by the Consolidated Rail Corporation on January 1, 1979; and

(ii) High speed ground transportation systems that connect metropolitan areas, without regard to whether those systems use new technologies not associated with traditional railroads; but does not include rapid transit operations in an urban area that are not connected to the general railroad system of transportation.

Refresher training means periodic retraining required by a railroad for employees or contractors to remain qualified to perform specific equipment inspection, testing, or maintenance functions.

Repair point means a location designated by a railroad where repairs of the type necessary occur on a regular basis. A repair point has, or should have, the facilities, tools, and personnel qualified to make the necessary repairs. A repair point need not be staffed continuously.

Rescue access window means a side-facing exterior window intended for use by emergency responders to gain access to passengers in an emergency situation.

Respond as intended means to produce the result that a device or system is designed to produce.

Retroreflective material means a material that is capable of reflecting light rays back to the light source and that conforms to the specifications for Type I Sheeting as specified in ASTM International Standard D 4956–07, ''Standard Specification for Retroreflective Sheeting for Traffic Control.'' The Director of the Federal Register approves the incorporation by reference of this standard in accordance with 5 U.S.C. 552(a) and 1 CFR part 51. You may obtain a copy of the incorporated standard from ASTM International, 100 Barr Harbor Drive, P.O. Box C700, West Conshohocken, PA 19428–2959. You may inspect a copy of the incorporated standard at the Federal Railroad Administration, Docket Clerk, 1200 New Jersey Avenue, SE., Washington, DC,

or at the National Archives and Records Administration (NARA). For information on the availability of this material at NARA, call 202–741–6030, or go to *http://www.archives.gov/federal-register/cfr/ibr-locations.html*.

Rollover strength means the strength provided to protect the structural integrity of a rail vehicle in the event the vehicle leaves the track and impacts the ground on its side or roof.

Roof rail means the longitudinal structural member at the intersection of the side wall and the roof sheathing.

Running brake test means a test (as further specified in § 238.319) performed by a qualified person of a train system or component while the train is in motion to verify that the system or component functions as intended.

Running gear defect means any condition not in compliance with this part which involves a truck component, a draft system component, a wheel, or a wheel component.

Safety appliance means an appliance required under 49 U.S.C. chapter 203, excluding power brakes. The term includes automatic couplers, hand brakes, sill steps, handholds, handrails, or ladder treads made of steel or a material of equal or greater mechanical strength used by the traveling public or railroad employees that provide a means for safely coupling, uncoupling, or ascending or descending passenger equipment.

Safety-critical means a component, system, or task that, if not available, defective, not functioning, not functioning correctly, not performed, or not performed correctly, increases the risk of damage to passenger equipment or injury to a passenger, crewmember, or other person.

Seating area means an area of a passenger car that normally contains passenger seating.

Semi-permanently coupled means coupled by means of a drawbar or other coupling mechanism that requires tools to perform the uncoupling operation. Coupling and uncoupling of each semi-permanently coupled unit in a train can be performed safely only while at a maintenance or shop location where personnel can safely get under a unit or between units.

Semi-monocoque means a type of rail vehicle construction where the shell or skin acts as a single unit with the supporting frame to resist and transmit the loads acting on the rail vehicle.

Shear strength means the ability of a structural member to resist forces or components of forces acting perpendicular to compression or tension forces, or both, in the member.

Shock absorbent material means material designed to prevent or mitigate injuries due to impact by yielding and absorbing much of the energy of impact.

Side posts means main vertical structural elements in the sides of a rail vehicle.

Side sill means that portion of the underframe or side at the bottom of the rail vehicle side wall.

Single car test means a comprehensive test (as further specified in § 238.311) of the functioning of all critical brake system components installed on an individual passenger car or unpowered vehicle, other than a self-propelled passenger car, used or allowed to be used in a passenger train.

Single car test device means a device capable of controlling the application and release of the brakes on an individual passenger car or an unpowered vehicle, other than a self-propelled passenger car, through pneumatic or electrical means.

Skin means the outer covering of a fuel tank and a rail vehicle. The skin may be covered with another coating of material such as fiberglass.

Spall, glazing means small pieces of glazing that fly off the back surface of the glazing when an object strikes the front surface.

Switching service means the classification of freight cars according to commodity or destination; assembling of cars for train movements; changing the position of cars for purposes of loading, unloading, or weighing; placing of locomotives and cars for repair or storage; or moving of rail equipment in connection with work service that does not constitute a train movement.

Telescope means override an adjoining rail vehicle or unit and penetrate into the interior of that adjoining vehicle or unit because of compressive forces.

Terminal means a starting point or ending point of a single scheduled trip for a train, where passengers may get on or off a train. Normally, this location is a point where the train would reverse direction or change destinations.

Tier I means operating at speeds not exceeding 125 mph.

Tier II means operating at speeds exceeding 125 mph but not exceeding 150 mph.

Tourist, scenic, historic, or excursion operations means railroad operations that carry passengers, often using antiquated equipment, with the conveyance of the passengers to a particular destination not being the principal purpose. Train movements of new passenger equipment for demonstration purposes are not tourist, scenic, historic, or excursion operations.

Trailer car means a rail vehicle that neither propels a Tier II passenger train nor is the leading unit in a Tier II passenger train. A trailer car is normally without a control stand and is normally occupied by passengers.

Train means a locomotive unit or locomotive units coupled, with or without cars. For the purposes of the provisions of this part related to power brakes, the term ''train'' does not include such equipment when being used in switching service.

Train brake communication line means the communication link between the locomotive and passenger equipment in a train by which the brake commands are transmitted. This may be a pneumatic pipe, electrical line, or radio signal.

Train, commuter means a passenger train providing commuter service within an urban, suburban, or metropolitan area. The term includes a passenger train provided by an instrumentality of a State or a political subdivision of a State.

Train, long-distance intercity passenger means a passenger train that provides service between large cities more than 125 miles apart and is not operated exclusively in the National Railroad Passenger Corporation's Northeast Corridor.

Train, passenger means a train that transports or is available to transport members of the general public. If a train is composed of a mixture of passenger and freight equipment, that train is a passenger train for purposes of this part.

Train, short-distance intercity passenger means a passenger train that provides service exclusively on the National Railroad Passenger Corporation's Northeast Corridor or between cities that are not more than 125 miles apart.

Train, Tier II passenger means a short-distance or long-distance intercity passenger train providing service at speeds that include those exceeding 125 mph but not exceeding 150 mph.

Trainset, passenger means a passenger train.

Transverse means in a direction perpendicular to the normal direction of travel.

Ultimate strength means the load at which a structural member fractures or ceases to resist any load.

Uncoupling mechanism means the arrangement for operating the coupler by any means.

Underframe means the lower horizontal support structure of a rail vehicle.

Unit means passenger equipment of any type, except a freight locomotive when used to haul a passenger train due to failure of a passenger locomotive.

Unoccupied volume means the volume of a rail vehicle or passenger train which does not contain seating and is not normally occupied by passengers or crewmembers.

Vehicle, rail means passenger equipment of any type and includes a car, trailer car, locomotive, power car, tender, or similar vehicle. This term does not include a freight locomotive when used to haul a passenger train due to failure of a passenger locomotive.

Vestibule means an area of a passenger car that normally does not contain seating and is used in passing from the seating area to the side exit doors.

Witness plate means a thin foil placed behind a piece of glazing undergoing an impact test. Any material spalled or broken from the back side of the glazing will dent or mark the witness plate.

Yard means a system of tracks within defined limits provided for the making up of trains, storing of cars, or other purposes.

Yard air test means a train brake system test conducted using a source of compressed air other than a locomotive.

Yield strength means the ability of a structural member to resist a change in length caused by a heavy load. Exceeding the yield strength may cause permanent deformation of the member.

[64 FR 25660, May 12, 1999, as amended at 65 FR 41305, July 3, 2000; 67 FR 19989, Apr. 23, 2002; 71 FR 36916, June 28, 2006; 71 FR 61857, Oct. 19, 2006; 73 FR 6400, Feb. 1, 2008]

§ 238.7 Waivers.

(a) A person subject to a requirement of this part may petition the Administrator for a waiver of compliance with such requirement. The filing of such a petition does not affect the person's responsibility for compliance with that requirement while the petition is being considered.

(b) Each petition for waiver under this section shall be filed in the manner and contain the information required by part 211 of this chapter.

(c) If the Administrator finds that a waiver of compliance is in the public interest and is consistent with railroad safety, the Administrator may grant the waiver subject to any conditions the Administrator deems necessary.

§ 238.9 Responsibility for compliance.

(a) A railroad subject to this part shall not—

(1) Use, haul, permit to be used or hauled on its line, offer in interchange, or accept in interchange any train or passenger equipment, while in service,

(i) That has one or more conditions not in compliance with a safety appliance or power brake provision of this part; or

(ii) That has not been inspected and tested as required by a safety appliance or power brake provision of this part; or

(2) Use, haul, offer in interchange, or accept in interchange any train or passenger equipment, while in service,

(i) That has one or more conditions not in compliance with a provision of this part, other than the safety appliance and power brake provisions of this part, if the railroad has actual knowledge of the facts giving rise to the violation, or a reasonable person acting in the circumstances and exercising reasonable care would have that knowledge; or

(ii) That has not been inspected and tested as required by a provision of this part, other than the safety appliance and power brake provisions of this part, if the railroad has actual knowledge of the facts giving rise to the violation, or a reasonable person acting in the circumstances and exercising reasonable care would have that knowledge; or

(3) Violate any other provision of this part.

(b) For purposes of this part, passenger equipment will be considered in use prior to departure but after it has received, or should have received, the inspection required under this part for movement and is deemed ready for passenger service.

(c) Although the duties imposed by this part are generally stated in terms of the duty of a railroad, any person as defined in § 238.5, including a contractor for a railroad, who performs any function covered by this part must perform that function in accordance with this part.

§ 238.11 Penalties.

(a) Any person, as defined in § 238.5, who violates any requirement of this part or causes the violation of any such requirement is subject to a civil penalty of at least $550 and not more than $16,000 per violation, except that: Penalties may be assessed against individuals only for willful violations, and, where a grossly negligent violation or a pattern of repeated violations has created an imminent hazard of death or injury to persons, or has caused death or injury, a penalty not to exceed $27,000 per violation may be assessed. Each day a violation continues shall constitute a separate offense. See appendix A to this part for a statement of agency civil penalty policy.

(b) Any person who knowingly and willfully falsifies a record or report required by this part may be subject to

criminal penalties under 49 U.S.C. 21311.

[64 FR 25660, May 12, 1999, as amended at 69 FR 30595, May 28, 2004; 72 FR 51198, Sept. 6, 2007]

§ 238.13 Preemptive effect.

Under 49 U.S.C. 20106, issuance of the regulations in this part preempts any State law, regulation, or order covering the same subject matter, except an additional or more stringent law, regulation, or order that is necessary to eliminate or reduce an essentially local safety hazard; that is not incompatible with a law, regulation, or order of the United States Government; and that does not unreasonably burden interstate commerce.

§ 238.15 Movement of passenger equipment with power brake defects.

Beginning on January 1, 2002, the following provisions of this section apply to railroads operating Tier I passenger equipment covered by this part. A railroad may request earlier application of these requirements upon written notification to FRA's Associate Administrator for Safety as provided in § 238.1(c) of this part.

(a) *General.* This section contains the requirements for moving passenger equipment with a power brake defect without liability for a civil penalty under this part. Railroads remain liable for the movement of passenger equipment under 49 U.S.C. 20303(c). For purposes of this section, § 238.17, and § 238.503, a ''power brake defect'' is a condition of a power brake component, or other primary brake component, that does not conform with this part. (Passenger cars and other passenger equipment classified as locomotives under part 229 of this chapter are also covered by the movement restrictions contained in § 229.9 of this chapter for those defective conditions covered by part 229 of this chapter.)

(b) *Limitations on movement of passenger equipment containing a power brake defect at the time a Class I or IA brake test is performed.* Except as provided in paragraph (c) of this section (which addresses brakes that become defective en route after a Class I or IA brake test was performed), a commuter or passenger train that has in its consist passenger equipment containing a power brake defect at the time that a Class I or IA brake test (or, for Tier II trains, the equivalent) is performed may only be moved, without civil penalty liability under this part—

(1) If all of the following conditions are met:

(i) The train is moved for purposes of repair, without passengers;

(ii) The applicable operating restrictions in paragraphs (d) and (e) of this section are observed; and

(iii) The passenger equipment is tagged, or information is recorded, as prescribed in paragraph (c)(2) of this section; or

(2) If the train is moved for purposes of scrapping or sale of the passenger equipment that has the power brake defect and all of the following conditions are met:

(i) The train is moved without passengers;

(ii) The movement is at a speed of 15 mph or less; and

(iii) The movement conforms with the railroad's air brake or power brake instructions.

(c) *Limitations on movement of passenger equipment in passenger service that becomes defective en route after a Class I or IA brake test.* Passenger equipment hauled or used in service in a commuter or passenger train that develops inoperative or ineffective power brakes or any other power brake defect while en route to another location after receiving a Class I or IA brake test (or, for Tier II trains, the equivalent) may be hauled or used by a railroad for repair, without civil penalty liability under this part, if the applicable operating restrictions set forth in paragraphs (d) and (e) of this section are complied with and all of the following requisites are satisfied:

(1) *En route defect.* At the time of the train's Class I or IA brake test, the passenger equipment in the train was properly equipped with power brakes that comply with this part. The power brakes on the passenger equipment become defective while it is en route to another location.

(2) *Record.* A tag or card is placed on both sides of the defective passenger equipment, or an automated tracking system is provided, with the following

information about the defective passenger equipment:

(i) The reporting mark and car or locomotive number;

(ii) The name of the inspecting railroad;

(iii) The name of the inspector;

(iv) The inspection location and date;

(v) The nature of each defect;

(vi) The destination of the equipment where it will be repaired; and

(vii) The signature, if possible, and job title of the person reporting the defective condition.

(3) *Automated tracking system.* Automated tracking systems used to meet the tagging requirements contained in paragraph (c)(2) of this section may be reviewed and monitored by FRA at any time to ensure the integrity of the system. FRA's Associate Administrator for Safety may prohibit or revoke a railroad's ability to utilize an automated tracking system in lieu of tagging if FRA finds that the automated tracking system is not properly secure, is inaccessible to FRA or a railroad's employees, or fails to adequately track or monitor the movement of defective equipment. Such a determination will be made in writing and will state the basis for such action.

(4) *Conditional requirement.* In addition, if an en route failure causes power brakes to be cut out or renders the brake inoperative on passenger equipment, the railroad shall:

(i) Determine the percentage of operative power brakes in the train based on the number of brakes known to be cut out or otherwise inoperative, using the formula specified in paragraph (d)(1) of this section;

(ii) Notify the person responsible for the movement of trains of the percent of operative brakes and movement restrictions on the train imposed by paragraph (d) of this section;

(iii) Notify the mechanical department of the failure; and

(iv) Confirm the percentage of operative brakes by a walking inspection at the next location where the railroad reasonably judges that it is safe to do so.

(d) *Operating restrictions based on percent operative power brakes in train*—(1) *Computation of percent operative power brakes.* (i) Except as specified in paragraphs (d)(1)(ii) and (iii) of this section, the percentage of operative power brakes in a train shall be determined by dividing the number of axles in the train with operative power brakes by the total number of axles in the train.

(ii) For trains equipped with only tread brake units (TBUs), the percentage of operative power brakes shall be determined by dividing the number of operative TBUs by the total number of TBUs in the train.

(iii) Each cut-out axle on a locomotive that weighs more than 200,000 pounds shall be counted as two cut-out axles for the purposes of calculating the percentage of operative brakes. Unless otherwise specified by the railroad, the friction braking effort over all other axles shall be considered uniform.

(iv) The following brake conditions not in compliance with this part do not render power brakes inoperative for purposes of this calculation:

(A) Failure or cutting out of secondary brake systems;

(B) Inoperative or otherwise defective handbrakes or parking brakes;

(C) Piston travel that is in excess of the Class I brake test limits required in § 238.313 but that does not exceed the maximum prescribed limits for considering the brakes to be effective; and

(D) Power brakes overdue for inspection, testing, maintenance, or stenciling under this part.

(2) *All passenger trains developing 50–74 percent operative power brakes.* A passenger train that develops inoperative power brake equipment resulting in at least 50 percent but less than 75 percent operative power brakes may be used only as follows:

(i) The train may be moved in passenger service only to the next forward passenger station;

(ii) The speed of the train shall be restricted to 20 mph or less; and

(iii) After all passengers are discharged, the defective equipment shall be moved to the nearest location where the necessary repairs can be made.

(3) *Commuter, short-distance intercity, and short-distance Tier II passenger trains developing 75–99 percent operative power brakes.* (i) *75–84 percent operative brakes.* Commuter, short-distance intercity, and short-distance Tier II

passenger trains which develop inoperative power brake equipment resulting in at least 75 percent but less than 85 percent operative brakes may be used only as follows:

(A) The train may be moved in passenger service only to the next forward location where the necessary repairs can be made; however, if the next forward location where the necessary repairs can be made does not have the facilities to handle the safe unloading of passengers, the train may be moved past the repair location in service only to the next forward passenger station in order to facilitate the unloading of passengers; and

(B) The speed of the train shall be restricted to 50 percent of the train's maximum allowable speed or 40 mph, whichever is less; and

(C) After all passengers are discharged, the defective equipment shall be moved to the nearest location where the necessary repairs can be made.

(ii) *85–99 percent operative brakes.* Commuter, short-distance intercity, and short-distance Tier II passenger trains which develop inoperative power brake equipment resulting in at least 85 percent but less than 100 percent operative brakes may only be used as follows:

(A) The train may be moved in passenger service only to the next forward location where the necessary repairs can be made; however, if the next forward location where the necessary repairs can be made does not have the facilities to handle the safe unloading of passengers, the train may be moved past the repair location in service only to the next forward passenger station in order to facilitate the unloading of passengers; and

(B) After all passengers are discharged, the defective equipment shall be moved to the nearest location where the necessary repairs can be made.

(4) *Long-distance intercity and long-distance Tier II passenger trains developing 75–99 operative power brakes.* (i) *75–84 percent operative brakes.* Long-distance intercity and long-distance Tier II passenger trains which develop inoperative power brake equipment resulting in at least 75 percent but less than 85 percent operative brakes may be used only if all of the following restrictions are observed:

(A) The train may be moved in passenger service only to the next forward repair location identified for repair of that equipment by the railroad operating the equipment in the list required by § 238.19(d); however, if the next forward repair location does not have the facilities to handle the safe unloading of passengers, the train may be moved past the designated repair location in service only to the next forward passenger station in order to facilitate the unloading of passengers; and

(B) The speed of the train shall be restricted to 50 percent of the train's maximum allowable speed or 40 mph, whichever is less; and

(C) After all passengers are discharged, the defective equipment shall be moved to the nearest location where the necessary repairs can be made.

(ii) *85–99 percent operative brakes.* Long-distance intercity and long-distance Tier II passenger trains which develop inoperative power brake equipment resulting in at least 85 percent but less than 100 percent operative brakes may be used only if all of the following restrictions are observed:

(A) The train may be moved in passenger service only to the next forward repair location identified for repair of that equipment by the railroad operating the equipment in the list required by § 238.19(d); however, if the next forward repair location does not have the facilities to handle the safe unloading of passengers, the train may be moved past the designated repair location in service only to the next forward passenger station in order to facilitate the unloading of passengers; and

(B) After all passengers are discharged, the defective equipment shall be moved to the nearest location where the necessary repairs can be made.

(e) *Operating restrictions on passenger trains with inoperative power brakes on the front or rear unit.* If the power brakes on the front or rear unit in any passenger train are completely inoperative the following shall apply:

(1) If the handbrake is located inside the interior of the car:

(i) A qualified person shall be stationed at the handbrake on the unit;

(ii) The car shall be locked-out and empty except for the railroad employee manning the handbrake; and

(iii) Appropriate speed restrictions shall be placed on the train by a qualified person;

(2) If the handbrake is located outside the interior of the car or is inaccessible to a qualified person:

(i) The car shall be locked-out and empty;

(ii) The speed of the train shall be restricted to 20 mph or less; and

(iii) The car shall be removed from the train or repositioned in the train at the first location where it is possible to do so.

(f) *Special Notice for Repair*. Nothing in this section authorizes the movement of passenger equipment subject to a Special Notice for Repair under part 216 of this chapter unless the movement is made in accordance with the restrictions contained in the Special Notice.

[64 FR 25660, May 12, 1999, as amended at 65 FR 41306, July 3, 2000; 67 FR 19990, Apr. 23, 2002]

§ 238.17 Movement of passenger equipment with other than power brake defects.

Beginning on January 1, 2002, the following provisions of this section apply to railroads operating Tier I passenger equipment covered by this part. A railroad may request earlier application of these requirements upon written notification to FRA's Associate Administrator for Safety as provided in § 238.1(c) of this part.

(a) *General*. This section contains the requirements for moving passenger equipment with other than a power brake defect. (Passenger cars and other passenger equipment classified as locomotives under part 229 of this chapter are also covered by the movement restrictions contained in § 229.9 of this chapter for those defective conditions covered by part 229 of this chapter.)

(b) *Limitations on movement of passenger equipment containing defects found at time of calendar day inspection*. Except as provided in §§ 238.303(e)(15), (e)(17) and (e)(18), 238.305(c) and (d), and 238.307(c)(1), passenger equipment containing a condition not in conformity with this part at the time of its calendar day mechanical inspection may be moved from that location for repair if all of the following conditions are satisfied:

(1) If the condition involves a running gear defect, the defective equipment is not used in passenger service and is moved in a non-revenue train;

(2) If the condition involves a non-running gear defect, the defective equipment may be used in passenger service in a revenue train provided that a qualified maintenance person determines that it is safe to do so, and if so, the car is locked out and empty, and all movement restrictions are observed except that the car may be occupied by a member of the train crew or a railroad employee to the extent necessary to safely operate the train;

(3) The requirements of paragraphs (c)(3) and (c)(4) of this section are met; and

(4) The special requirements of paragraph (e) of this section, if applicable, are met.

(c) *Limitations on movement of passenger equipment that develops defects en route*. Except as provided in §§ 238.303(e)(15), (e)(17) and (e)(18), 238.305(c), 238.307(c)(1), and 238.503(f), passenger equipment that develops en route to its destination, after its calendar day mechanical inspection is performed and before its next calendar day mechanical inspection is performed, any condition not in compliance with this part, other than a power brake defect, may be moved only if the railroad complies with all of the following requirements or, if applicable, the specified requirements in paragraph (e) of this section:

(1) Prior to movement of equipment with a potential running gear defect, a qualified maintenance person shall determine if it is safe to move the equipment in passenger service and, if so, the maximum speed and other restrictions necessary for safely conducting the movement. If appropriate, these determinations may be made based upon a description of the defective condition provided by a crewmember. If the determinations required by this paragraph are made by an off-site qualified

maintenance person based on a description of the defective condition by on-site personnel, then a qualified maintenance person shall perform a physical inspection of the defective equipment, at the first location possible, to verify the description of the defect provided by the on-site personnel.

(2) Prior to movement of equipment with a non-running gear defect, a qualified person or a qualified maintenance person shall determine if it is safe to move the equipment in passenger service and, if so, the maximum speed and other restrictions necessary for safely conducting the movement. If appropriate, these determinations may be made based upon a description of the defective condition provided by the on-site personnel.

(3) Prior to movement of any defective equipment, the qualified person or qualified maintenance person shall notify the crewmember in charge of the movement of the defective equipment, who in turn shall inform all other crewmembers of the presence of the defective condition(s) and the maximum speed and other restrictions determined under paragraph (c)(1) or (c)(2) of this section. The movement shall be made in conformance with such restrictions.

(4) The railroad shall maintain a record of all defects reported and their subsequent repair in the defect tracking system required in § 238.19. In addition, prior to movement of the defective equipment, a tag or card placed on both sides of the defective equipment, or an automated tracking system, shall record the following information about the defective equipment:

(i) The reporting mark and car or locomotive number;

(ii) The name of the inspecting railroad;

(iii) The name of the inspector, inspection location, and date;

(iv) The nature of each defect;

(v) Movement restrictions and safety restrictions, if any;

(vi) The destination of the equipment where it will be repaired; and

(vii) The signature, if possible, as well as the job title and location of the person making the determinations required by this section.

(5) *Automated tracking system.* Automated tracking systems used to meet the tagging requirements contained in paragraph (c)(4) of this section may be reviewed and monitored by FRA at any time to ensure the integrity of the system. FRA's Associate Administrator for Safety may prohibit or revoke a railroad's ability to utilize an automated tracking system in lieu of tagging if FRA finds that the automated tracking system is not properly secure, is inaccessible to FRA or a railroad's employees, or fails to adequately track or monitor the movement of defective equipment. Such a determination will be made in writing and will state the basis for such action.

(6) After a qualified maintenance person or a qualified person verifies that the defective equipment is safe to remain in service as required in paragraphs (c)(1) and (c)(2) of this section, the defective equipment that develops a condition not in compliance with this part while en route may continue in passenger service not later than the next calendar day mechanical inspection, if the requirements of this paragraph are otherwise fully met.

(d) *Inspection of roller bearings on equipment involved in a derailment.* (1) A railroad shall not continue passenger equipment in service that has a roller bearing whose truck was involved in a derailment unless the bearing has been inspected and tested in accordance with the railroad's procedures for handling defective equipment.

(2) The roller bearing shall be disassembled from the axle and inspected internally if:

(i) It shows any external sign of damage;

(ii) It makes any unusual noise when its wheel set is spun freely (an on-track rolling test is acceptable) or when the bearing is manually rotated;

(iii) Its truck was involved in a derailment at a speed of more than 10 miles per hour; or

(iv) Its truck was dragged on the ground for more than 100 feet.

(e) *Special requisites for movement of passenger equipment with safety appliance defects.* Consistent with 49 U.S.C. 20303, passenger equipment with a safety appliance not in compliance with

this part or with part 231 of this chapter, if applicable, may be moved—

(1) If necessary to effect repair of the safety appliance;

(2) From the point where the safety appliance defect was first discovered by the railroad to the nearest available location on the railroad where the necessary repairs required to bring the passenger equipment into compliance can be made or, at the option of the receiving railroad, the equipment may be received and hauled for repair to a point on the receiving railroad's line that is no farther than the point on the delivering railroad's line where the repair of the defect could have been made;

(3) If a tag placed on both sides of the passenger equipment or an automated tracking system contains the information required under paragraph (c)(4) of this section; and

(4) After notification of the crewmember in charge of the movement of the defective equipment, who in turn shall inform all other crewmembers of the presence of the defective condition(s).

(f) *Special Notice for Repair*. Nothing in this section authorizes the movement of equipment subject to a Special Notice for Repair under part 216 of this chapter unless the movement is made in accordance with the restrictions contained in the Special Notice.

[64 FR 25660, May 12, 1999, as amended at 65 FR 41306, July 3, 2000; 71 FR 61857, Oct. 19, 2006; 73 FR 6400, Feb. 1, 2008]

§ 238.19 Reporting and tracking of repairs to defective passenger equipment.

(a) *General*. Beginning on January 1, 2002, each railroad shall have in place a reporting and tracking system for passenger equipment with a defect not in conformance with this part. A railroad may request earlier application of these requirements upon written notification to FRA's Associate Administrator for Safety as provided in § 238.1(c) of this part. The reporting and tracking system shall record the following information:

(1) The identification number of the defective equipment;

(2) The date the defect was discovered;

(3) The nature of the defect;

(4) The determination made by a qualified person or qualified maintenance person on whether the equipment is safe to run;

(5) The name of the qualified person or qualified maintenance person making such a determination;

(6) Any operating restrictions placed on the equipment; and

(7) Repairs made and the date that they were made.

(b) *Retention of records*. At a minimum, each railroad shall keep the records described in paragraph (a) of this section for one periodic maintenance interval for each specific type of equipment as described in the railroad's inspection, testing, and maintenance plan required by § 238.107. FRA strongly encourages railroads to keep these records for longer periods of time because they form the basis for future reliability-based decisions concerning test and maintenance intervals that may be developed pursuant to § 238.307(b).

(c) *Availability of records*. Railroads shall make defect reporting and tracking records available to FRA upon request.

(d) *List of power brake repair points*. Railroads operating long-distance intercity and long-distance Tier II passenger equipment shall designate locations, in writing, where repairs to passenger equipment with a power brake defect will be made and shall provide the list to FRA's Associate Administrator for Safety and make it available to FRA for inspection and copying upon request. Railroads operating these trains shall designate a sufficient number of repair locations to ensure the safe and timely repair of passenger equipment. These designations shall not be changed without at least 30 days' advance written notice to FRA's Associate Administrator for Safety.

[64 FR 25660, May 12, 1999, as amended at 65 FR 41306, July 3, 2000]

§ 238.21 Special approval procedure.

(a) *General*. The following procedures govern consideration and action upon requests for special approval of alternative standards under §§ 238.103, 238.223, 238.229, 238.309, 238.311, 238.405, or 238.427; for approval of alternative

compliance under §§ 238.201, 238.229, or 238.230; and for special approval of pre-revenue service acceptance testing plans as required by § 238.111. (Requests for approval of programs for the inspection, testing, and maintenance of Tier II passenger equipment are governed by § 238.505.)

(b) *Petitions for special approval of alternative standard.* Each petition for special approval of an alternative standard shall contain—

(1) The name, title, address, and telephone number of the primary person to be contacted with regard to review of the petition;

(2) The alternative proposed, in detail, to be substituted for the particular requirements of this part;

(3) Appropriate data or analysis, or both, establishing that the alternative will provide at least an equivalent level of safety; and

(4) A statement affirming that the railroad has served a copy of the petition on designated representatives of its employees, together with a list of the names and addresses of the persons served.

(c) *Petitions for special approval of alternative compliance.* Each petition for special approval of alternative compliance shall contain—

(1) The name, title, address, and telephone number of the primary person to be contacted with regard to the petition;

(2) The elements prescribed in §§ 238.201(b), 238.229(j)(2), and 238.230(d); and

(3) A statement affirming that the railroad has served a copy of the petition on designated representatives of its employees, together with a list of the names and addresses of the persons served.

(d) *Petitions for special approval of pre-revenue service acceptance testing plan.* (1) Each petition for special approval of a pre-revenue service acceptance testing plan shall contain—

(i) The name, title, address, and telephone number of the primary person to be contacted with regard to review of the petition; and

(ii) The elements prescribed in § 238.111.

(2) Three copies of each petition for special approval of the pre-revenue service acceptance testing plan shall be submitted to the Associate Administrator for Safety, Federal Railroad Administration, 1120 Vermont Ave., N.W., Mail Stop 25, Washington, D.C. 20590.

(e) *Federal Register notice.* FRA will publish a notice in the FEDERAL REGISTER concerning each petition under paragraphs (b) and (c) of this section.

(f) *Comment.* Not later than 30 days from the date of publication of the notice in the FEDERAL REGISTER concerning a petition under paragraphs (b) and (c) of this section, any person may comment on the petition.

(1) Each comment shall set forth specifically the basis upon which it is made, and contain a concise statement of the interest of the commenter in the proceeding.

(2) Each comment shall be submitted to the DOT Central Docket Management System, Nassif Building, Room Pl–401, 400 Seventh Street, S.W., Washington, D.C. 20590, and shall contain the assigned docket number for that proceeding. The form of such submission may be in written or electronic form consistent with the standards and requirements established by the Central Docket Management System and posted on its web site at *http://dms.dot.gov.*

(g) *Disposition of petitions.* (1) FRA will conduct a hearing on a petition in accordance with the procedures provided in § 211.25 of this chapter.

(2) If FRA finds that the petition complies with the requirements of this section or that the proposed plan is acceptable or changes are justified, or both, the petition will be granted, normally within 90 days of its receipt. If the petition is neither granted nor denied within 90 days, the petition remains pending for decision. FRA may attach special conditions to the approval of the petition. Following the approval of a petition, FRA may reopen consideration of the petition for cause stated.

(3) If FRA finds that the petition does not comply with the requirements of this section, or that the proposed plan is not acceptable or that the proposed changes are not justified, or both, the petition will be denied, normally within 90 days of its receipt.

(4) When FRA grants or denies a petition, or reopens consideration of the petition, written notice is sent to the petitioner and other interested parties.

[64 FR 25660, May 12, 1999, as amended at 64 FR 70196, Dec. 16, 1999; 71 FR 61858, Oct. 19, 2006]

§ 238.23 Information collection.

(a) The information collection requirements of this part were reviewed by the Office of Management and Budget pursuant to the Paperwork Reduction Act of 1995 (44 U.S.C. 3501 *et. seq.*) and are assigned OMB control number 2130–0544.

(b) The information collection requirements are found in the following sections: §§ 238.1, 238.7, 238.11, 238.15, 238.17, 238.19, 238.21, 238.103, 238.105, 238.107, 238.109, 238.111, 238.201, 238.203, 238.211, 238.223, 238.231, 238.237, 238.301, 238.303, 238.305, 238.307, 238.309, 238.311, 238.313, 238.315, 238.317, 238.403, 238.405, 238.421, 238.423, 238.427, 238.431, 238.437, 238.441, 238.445, 238.447, 238.503, 238.505, and 238.603.

Subpart B—Safety Planning and General Requirements

§ 238.101 Scope.

This subpart contains safety planning and general safety requirements for all railroad passenger equipment subject to this part.

§ 238.103 Fire safety.

(a) *Materials.* (1) Materials used in constructing a passenger car or a cab of a locomotive ordered on or after September 8, 2000, or placed in service for the first time on or after September 9, 2002, shall meet the test performance criteria for flammability and smoke emission characteristics as specified in Appendix B to this part, or alternative standards issued or recognized by an expert consensus organization after special approval of FRA under § 238.21.

(2) On or after November 8, 1999, materials introduced in a passenger car or a locomotive cab, as part of any kind of rebuild, refurbishment, or overhaul of the car or cab, shall meet the test performance criteria for flammability and smoke emission characteristics as specified in Appendix B to this part, or alternative standards issued or recognized by an expert consensus organization after special approval of FRA under § 238.21.

(3) For purposes of complying with the requirements of this paragraph, a railroad may rely on the results of tests of material conducted in accordance with the standards and performance criteria for flammabilitiy and smoke emission characteristics as specified in Appendix B to this part in effect on July 12, 1999 (*see* 49 CFR parts 200–399, revised as of October 1, 1999), if prior to June 25, 2002 the material is—

(i) Installed in a passenger car or locomotive;

(ii) Held in inventory by the railroad; or

(iii) Ordered by the railroad.

(b) *Certification.* A railroad shall require certification that a representative sample of combustible materials to be—

(1) Used in constructing a passenger car or a locomotive cab, or

(2) Introduced in a passenger car or a locomotive cab, as part of any kind of rebuild, refurbishment, or overhaul of the car or cab, has been tested by a recognized independent testing laboratory and that the results show the representative sample complies with the requirements of paragraph (a) of this section at the time it was tested.

(c) *Fire safety analysis for procuring new passenger cars and locomotives.* In procuring new passenger cars and locomotives, each railroad shall ensure that fire safety considerations and features in the design of this equipment reduce the risk of personal injury caused by fire to an acceptable level in its operating environment using a formal safety methodology such as MIL-STD-882. To this end, each railroad shall complete a written fire safety analysis for the passenger equipment being procured. In conducting the analysis, the railroad shall—

(1) Identify, analyze, and prioritize the fire hazards inherent in the design of the equipment.

(2) Take effective steps to design the equipment and select materials which help provide sufficient fire resistance to reasonably ensure adequate time to detect a fire and safely evacuate the passengers and crewmembers, if a fire

cannot be prevented. Factors to consider include potential ignition sources; the type, quantity, and location of the materials; and availability of rapid and safe egress to the exterior of the equipment under conditions secure from fire, smoke, and other hazards.

(3) Reasonably ensure that a ventilation system in the equipment does not contribute to the lethality of a fire.

(4) Identify in writing any train component that is a risk of initiating fire and which requires overheat protection. An overheat detector shall be installed in any component when the analysis determines that an overheat detector is necessary.

(5) Identify in writing any unoccupied train compartment that contains equipment or material that poses a fire hazard, and analyze the benefit provided by including a fire or smoke detection system in each compartment so identified. A fire or smoke detector shall be installed in any unoccupied compartment when the analysis determines that such equipment is necessary to ensure sufficient time for the safe evacuation of passengers and crewmembers from the train. For purposes of this section, an unoccupied train compartment means any part of the equipment structure that is not normally occupied during operation of the train, including a closet, baggage compartment, food pantry, etc.

(6) Determine whether any occupied or unoccupied space requires a portable fire extinguisher and, if so, the proper type and size of the fire extinguisher for each location. As required by § 239.101 of this chapter, each passenger car is required to have a minimum of one portable fire extinguisher. If the analysis performed indicates that one or more additional portable fire extinguishers are needed, such shall be installed.

(7) On a case-by-case basis, analyze the benefit provided by including a fixed, automatic fire-suppression system in any unoccupied train compartment that contains equipment or material that poses a fire hazard, and determine the proper type and size of the automatic fire-suppression system for each such location. A fixed, automatic fire-suppression system shall be installed in any unoccupied compartment when the analysis determines that such equipment is practical and necessary to ensure sufficient time for the safe evacuation of passengers and crewmembers from the train.

(8) Explain how safety issues are resolved in the design of the equipment and selection of materials to reduce the risk of each fire hazard.

(9) Describe the analysis and testing necessary to demonstrate that the fire protection approach taken in the design of the equipment and selection of materials meets the fire protection requirements of this part.

(d) *Fire safety analysis for existing passenger cars and locomotives.* (1) Not later than January 10, 2001, each passenger railroad shall complete a preliminary fire safety analysis for each category of existing passenger cars and locomotives and rail service.

(2) Not later than July 10, 2001, each such railroad shall—

(i) Complete a final fire safety analysis for any category of existing passenger cars and locomotives and rail service evaluated during the preliminary fire safety analysis as likely presenting an unacceptable risk of personal injury. In conducting the analysis, the railroad shall consider the extent to which materials comply with the test performance criteria for flammability and smoke emission characteristics as specified in Appendix B to this part or alternative standards approved by FRA under this part.

(ii) Take remedial action to reduce the risk of personal injuries to an acceptable level in any such category, if the railroad finds the risk to be unacceptable. In considering remedial action, a railroad is not required to replace material found not to comply with the test performance criteria for flammability and smoke emission characteristics required by this part, if:

(A) The risk of personal injuries from the material is negligible based on the railroad's operating environment and the material's size, or location, or both; or

(B) The railroad takes alternative action which reduces the risk of personal injuries to an acceptable level.

(3) Not later than July 10, 2003, each such railroad shall—

(i) Complete a final fire safety analysis for all categories of existing passenger cars and locomotives and rail service. In completing this analysis, the railroad shall, as far as practicable, determine the extent to which remaining materials comply with the test performance criteria for flammability and smoke emission characteristics as specified in Appendix B to this part or alternative standards approved by FRA under this part.

(ii) Take remedial action to reduce the risk of personal injuries to an acceptable level in any such category, if the railroad finds the risk to be unacceptable. In considering remedial action, a railroad is not required to replace material found not to comply with the test performance criteria for flammability and smoke emission characteristics required by this part, if:

(A) The risk of personal injuries from the material is negligible based on the railroad's operating environment and the material's size, or location, or both; or

(B) The railroad takes alternative action which reduces the risk of personal injuries to an acceptable level.

(4) Where possible prior to transferring existing passenger cars and locomotives to a new category of rail service, but in no case more than 90 days following such a transfer, the passenger railroad shall complete a new fire safety analysis taking into consideration the change in railroad operations and shall effect prompt action to reduce any identified risk to an acceptable level.

(5) As used in this paragraph, a ''category of existing passenger cars and locomotives and rail service'' shall be determined by the railroad based on relevant fire safety risks, including available ignition sources, presence or absence of heat/smoke detection systems, known variations from the required material test performance criteria or alternative standards approved by FRA, and availability of rapid and safe egress to the exterior of the vehicle under conditions secure from fire, smoke, and other hazards.

(e) *Inspection, testing, and maintenance.* Each railroad shall develop and adopt written procedures for the inspection, testing, and maintenance of all fire safety systems and fire safety equipment on the passenger equipment it operates. The railroad shall comply with those procedures that it designates as mandatory for the safety of the equipment and its occupants.

[64 FR 25660, May 12, 1999, as amended at 67 FR 42909, June 25, 2002]

§ 238.105 Train electronic hardware and software safety.

The requirements of this section apply to electronic hardware and software used to control or monitor safety functions in passenger equipment ordered on or after September 8, 2000, and such components implemented or materially modified in new or existing passenger equipment on or after September 9, 2002.

(a) The railroad shall develop and maintain a written hardware and software safety program to guide the design, development, testing, integration, and verification of software and hardware that controls or monitors equipment safety functions.

(b) The hardware and software safety program shall be based on a formal safety methodology that includes a Failure Modes, Effects, Criticality Analysis (FMECA); verification and validation testing for all hardware and software components and their interfaces; and comprehensive hardware and software integration testing to ensure that the hardware and software system functions as intended.

(c) The hardware and software safety program shall include a description of how the following will be accomplished, achieved, carried out, or implemented to ensure safety and reliability:

(1) The hardware and software design process;

(2) The hardware and software design documentation;

(3) The hardware and software hazard analysis;

(4) Hardware and software safety reviews;

(5) Hardware and software hazard monitoring and tracking;

(6) Hardware and software integration safety testing; and

(7) Demonstration of overall hardware and software system safety as part of the pre-revenue service testing of the equipment.

(d) (1) Hardware and software that controls or monitors a train's primary braking system shall either:

(i) Fail safely by initiating a full service brake application in the event of a hardware or software failure that could impair the ability of the engineer to apply or release the brakes; or

(ii) Access to direct manual control of the primary braking system (both service and emergency braking) shall be provided to the engineer.

(2) Hardware and software that controls or monitors the ability to shut down a train's main power and fuel intake system shall either:

(i) Fail safely by shutting down the main power and cutting off the intake of fuel in the event of a hardware or software failure that could impair the ability of the train crew to command that electronic function; or

(ii) The ability to shut down the main power and fuel intake by non-electronic means shall be provided to the train crew.

(e) The railroad shall comply with the elements of its hardware and software safety program that affect the safety of the passenger equipment.

[67 FR 19990, Apr. 23, 2002]

§ 238.107 Inspection, testing, and maintenance plan.

(a) *General.* Beginning on January 1, 2002, the following provisions of this section apply to railroads operating Tier I passenger equipment covered by this part. A railroad may request earlier application of these requirements upon written notification to FRA's Associate Administrator for Safety as provided in § 238.1(c).

(b) Each railroad shall develop, and provide to FRA upon request, a detailed inspection, testing, and maintenance plan consistent with the requirements of this part. This plan shall include a detailed description of the following:

(1) Inspection procedures, intervals, and criteria;

(2) Test procedures and intervals;

(3) Scheduled preventive maintenance intervals;

(4) Maintenance procedures; and

(5) Special testing equipment or measuring devices required to perform inspections and tests.

(c) The inspection, testing, and maintenance plan required by this section is not intended to address and should not include procedures to address employee working conditions that arise in the course of conducting the inspections, tests, and maintenance set forth in the plan. When requesting a copy of the railroad's plan, FRA does not intend to review any portion of the plan that relates to employee working conditions.

(d) The inspection, testing, and maintenance plan required by this section shall be reviewed by the railroad annually.

[64 FR 25660, May 12, 1999, as amended at 65 FR 41307, July 3, 2000]

§ 238.109 Training, qualification, and designation program.

(a) Beginning on January 1, 2002, each railroad shall have adopted a training, qualification, and designation program for employees and contractors that perform any of the inspections, tests, or maintenance required by this part, and shall have trained such employees and contractors in accordance with the program. A railroad may request earlier application of these requirements upon written notification to FRA's Associate Administrator for Safety as provided in § 238.1(c). For purposes of this section, a ''contractor'' is defined as a person under contract with the railroad or an employee of a person under contract with the railroad to perform any of the tasks required by this part.

(b) As part of this program, the railroad shall, at a minimum:

(1) Identify the tasks related to the inspection, testing, and maintenance required by this part that must be performed on each type of equipment that the railroad operates;

(2) Develop written procedures for the performance of the tasks identified in paragraph (b)(1) of this section;

(3) Identify the skills and knowledge necessary to perform each task identified in paragraph (b)(1) of this section;

(4) Adopt a training curriculum that includes classroom and ''hands-on'' lessons designed to impart the skills and knowledge identified as necessary to perform each task identified in paragraph (b)(1) of this section. The training curriculum shall specifically address the Federal regulatory requirements contained in this part that are related to the performance of the tasks identified;

(5) Require all employees and contractors to successfully complete the training course that covers the equipment and tasks for which they are responsible that are required by this part as well as the specific Federal regulatory requirements contained in this part related to equipment and tasks for which they are responsible;

(6) Require all employees and contractors to pass either a written or an oral examination covering the equipment and tasks for which they are responsible that are required by this part as well as the specific Federal regulatory requirements contained in this part related to equipment and tasks for which they are responsible;

(7) Require all employees and contractors to individually demonstrate ''hands-on'' capability to successfully perform the tasks required by this part that must be performed as part of their duties on the type equipment to which they are assigned;

(8) Require supervisors to complete the program that covers the employees whom they supervise, including refresher training;

(9) Require supervisors to exercise oversight to ensure that all the identified tasks are performed in accordance with the railroad's written procedures;

(10) Designate in writing that each employee and contractor has the knowledge and skills necessary to perform the safety-related tasks that are part of his or her job;

(11) Require periodic refresher training, at an interval not to exceed three years, that includes classroom and ''hands-on'' training, as well as testing; except, employees and contractors that have completed their initial training under this part prior to January 1, 2002, shall not be required to complete their first periodic refresher training until four years after the completion of their initial training, and every three years thereafter;

(12) Add new equipment to the qualification and designation program prior to its introduction to revenue service; and

(13) Maintain records adequate to demonstrate that each employee and contractor performing safety-related tasks on passenger equipment is currently qualified to do so. These records shall be adequate to distinguish the qualifications of the employee or contractor as a qualified person or as a qualified maintenance person.

[64 FR 25660, May 12, 1999, as amended at 65 FR 41307, July 3, 2000; 67 FR 19990, Apr. 23, 2002]

§ 238.111 Pre-revenue service acceptance testing plan.

(a) *Passenger equipment that has previously been used in revenue service in the United States.* For passenger equipment that has previously been used in revenue service in the United States, each railroad shall test the equipment on its system prior to placing such equipment in revenue service for the first time on its railroad to ensure the compatibility of the equipment with the railroad's operating system (including the track, and signal system). A description of such testing shall be retained by the railroad and made available to FRA for inspection and copying upon request. For purposes of this paragraph, passenger equipment that has previously been used in revenue service in the United States means:

(1) The actual equipment used in such service;

(2) Equipment manufactured identically to that actual equipment; and

(3) Equipment manufactured similarly to that actual equipment with no material differences in safety-critical components or systems.

(b) *Passenger equipment that has not been used in revenue service in the United States.* Before using passenger equipment for the first time on its system that has not been used in revenue service in the United States, each railroad shall:

(1) Prepare a pre-revenue service acceptance testing plan for the equipment which contains the following elements:

(i) An identification of any waivers of FRA or other Federal safety regulations required for the testing or for revenue service operation of the equipment;

(ii) A clear statement of the test objectives. One of the principal test objectives shall be to demonstrate that the equipment meets the safety requirements specified in this part when operated in the environment in which it is to be used;

(iii) A planned schedule for conducting the testing;

(iv) A description of the railroad property or facilities to be used to conduct the testing;

(v) A detailed description of how the testing is to be conducted, including a description of the criteria to be used to evaluate the equipment's performance;

(vi) A description of how the test results are to be recorded;

(vii) A description of any special instrumentation to be used during the tests;

(viii) A description of the information or data to be obtained;

(ix) A description of how the information or data obtained is to be analyzed or used;

(x) A description of any criteria to be used as safety limits during the testing;

(xi) A description of the criteria to be used to measure or determine the success or failure of the tests. If acceptance is to be based on extrapolation of less than full-level testing results, the analysis to be done to justify the validity of the extrapolation shall be described;

(xii) Quality control procedures to ensure that the inspection, testing, and maintenance procedures are followed;

(xiii) Criteria to be used for the revenue service operation of the equipment; and

(xiv) A description of any testing of the equipment that has previously been performed.

(2) Submit a copy of the plan to FRA at least 30 days prior to testing the equipment and include with that submission notification of the times and places of the pre-revenue service tests to permit FRA observation of such tests. For Tier II passenger equipment, the railroad shall obtain FRA approval of the plan under the procedures specified in § 238.21.

(3) Comply with the plan, including fully executing the tests required by the plan.

(4) Document in writing the results of the tests. For Tier II passenger equipment, the railroad shall report the results of the tests to the FRA Associate Administrator for Safety at least 90 days prior to its intended operation of the equipment in revenue service.

(5) Correct any safety deficiencies identified in the design of the equipment or in the inspection, testing, and maintenance procedures, uncovered during the testing. If safety deficiencies cannot be corrected by design changes, the railroad shall impose operational limitations on the revenue service operation of the equipment that are designed to ensure that the equipment can operate safely. For Tier II passenger equipment, the railroad shall comply with any operational limitations imposed by the FRA Associate Administrator for Safety on the revenue service operation of the equipment for cause stated following FRA review of the results of the test program. This section does not restrict a railroad from petitioning FRA for a waiver of a safety regulation under the procedures specified in part 211 of this chapter.

(6) Make the plan and documentation kept pursuant to that plan available for inspection and copying by FRA upon request.

(7) For Tier II passenger equipment, obtain approval from the FRA Associate Administrator for Safety prior to placing the equipment in revenue service. The Associate Administrator grants such approval upon a showing of the railroad's compliance with the applicable requirements of this part.

(c) If a railroad plans a major upgrade or introduction of new technology on Tier II passenger equipment that has been used in revenue service in the United States and that affects a safety system on such equipment, the railroad shall follow the procedures specified in paragraph (b) of this section prior to placing the equipment in

revenue service with such a major upgrade or introduction of new technology.

§ 238.113 Emergency window exits.

(a) Number and location. Except as provided in paragraph (a)(3) of this section, the following requirements in this paragraph (a) apply on or after April 1, 2008—

(1) *Single-level passenger cars.* Each single-level passenger car shall have a minimum of four emergency window exits. At least one emergency window exit shall be located in each side of each end (half) of the car, in a staggered configuration where practical. (*See* Figure 1 to this subpart; *see also* Figures 1b and 1c to this subpart.)

(2) *Multi-level passenger cars—main levels.* Each main level in a multi-level passenger car is subject to the same requirements specified for single-level passenger cars in paragraph (a)(1) of this section.

(3) *Multi-level passenger cars—levels with seating areas other than main levels.*

(i) Except as provided in paragraphs (a)(3)(ii) and (iii) of this section, on or after August 1, 2009, any level other than a main level used for passenger seating in a multi-level passenger car, such as an intermediate level, shall have a minimum of two emergency window exits in each seating area. The emergency window exits shall be accessible to passengers in the seating area without requiring movement through an interior door or to another level of the car. At least one emergency window exit shall be located in each side of the seating area. An emergency window exit may be located within an exterior side door in the passenger compartment if it is not practical to place the window exit in the side of the seating area. (*See* Figures 2 and 2a to this subpart.)

(ii) Only one emergency window exit is required in a seating area in a passenger compartment if:

(A) It is not practical to place an emergency window exit in a side of the passenger compartment due to the need to provide accessible accommodations under the Americans with Disabilities Act of 1990;

(B) There are no more than four seats in the seating area; and

(C) A suitable, alternate arrangement for emergency egress is provided.

(iii) For passenger cars ordered prior to April 1, 2009, and placed in service prior to April 1, 2011, only one emergency window exit is required in a seating area in a passenger compartment if—

(A) It is not practicable to place a window exit in a side of the passenger compartment (due to the presence of a structure such as a bathroom, electrical locker, or kitchen); and

(B) There are no more than eight seats in the seating area.

(4) *Cars with a sleeping compartment or similar private compartment.* Each level of a passenger car with a sleeping compartment or a similar private compartment intended to be occupied by a passenger or train crewmember shall have at least one emergency window exit in each such compartment. For purposes of this paragraph (a)(4), a bathroom, kitchen, or locomotive cab is not considered a ''compartment.''

(b) *Ease of operability.* On or after November 8, 1999, each emergency window exit shall be designed to permit rapid and easy removal from the inside of the car during an emergency situation without requiring the use of a tool or other implement.

(c) *Dimensions.* Except as provided in paragraphs (c)(1) and (c)(2) of this section, each emergency window exit in a passenger car, including a sleeping car, ordered on or after September 8, 2000, or placed in service for the first time on or after September 9, 2002, shall have an unobstructed opening with minimum dimensions of 26 inches horizontally by 24 inches vertically. A seatback is not an obstruction if it can be moved away from the window opening without using a tool or other implement.

(1) *Emergency window exits in exterior side doors.* An emergency window exit located within an exterior side door, in accordance with the requirements of paragraph (a)(3)(i) of this section, may have an unobstructed opening with minimum dimensions of 24 inches horizontally by 26 inches vertically.

(2) *Additional emergency window exits.* Any emergency window exit in addition to the minimum number required by paragraph (a) of this section that

has been designated for use by the railroad need not comply with the minimum dimension requirements in paragraph (c) of this section, but must otherwise comply with all requirements in this part applicable to emergency window exits.

(d) *Marking and instructions.* (1) Each emergency window exit shall be conspicuously and legibly marked with luminescent material on the inside of each car to facilitate passenger egress.

(2) Legible and understandable operating instructions, including instructions for removing the window, shall be posted at or near each such window exit. If window removal may be hindered by the presence of a seatback, headrest, luggage rack, or other fixture, the instructions shall state the method for allowing rapid and easy removal of the window, taking into account the fixture(s), and this portion of the instructions may be in written or pictorial format.

[73 FR 6401, Feb. 1, 2008]

§ 238.114 Rescue access windows.

(a) *Number and location.* Except as provided in paragraph (a)(1)(ii) of this section, the following requirements in this paragraph (a) apply on or after April 1, 2008—

(1) *Single-level passenger cars.* Except as provided in this paragraph (a)(1) and in paragraphs (a)(1)(i), (a)(1)(ii), and (a)(5) of this section, each single-level passenger car shall have a minimum of two rescue access windows. At least one rescue access window shall be located in each side of the car entirely within 15 feet of the car's centerline, or entirely within 7½ feet of the centerline if the car does not exceed 45 feet in length. (*See* Figure 1a to this subpart; *see also* Figures 1b and 1c to this subpart.) If the seating level is obstructed by an interior door or otherwise partitioned into separate seating areas, each separate seating area shall have a minimum of one rescue access window in each side of the seating area, located as near to the center of the car as practical.

(i) For a single-level passenger car ordered prior to April 1, 2009, and placed in service prior to April 1, 2011, rescue access windows may be located farther than the above prescribed distances from the car's centerline, or located within exterior side doors, or both, if at least one rescue access window is located within each side of each end (half) of the same passenger compartment.

(ii) For a single-level passenger car ordered prior to September 8, 2000, and placed in service prior to September 9, 2002, the requirements of paragraph (a)(1) apply on or after August 1, 2009 if the car has at least two exterior side doors (or door leaves), each with a manual override device, and such doors (or door leaves) are located one on each side of the car, in opposite ends (halves) of the car (*i.e.*, in diagonally-opposite quadrants). The manual override device shall be—

(A) Capable of releasing the door (or door leaf) to permit it to be opened without power from outside the car;

(B) Located adjacent to the door (or door leaf) that it controls; and

(C) Designed and maintained so that a person can access the override device from outside the car without using a tool or other implement.

(2) *Multi-level passenger cars—main levels.* Each main level in a multi-level passenger car is subject to the same requirements specified for single-level passenger cars in paragraph (a)(1) of this section, with the exception of paragraph (a)(1)(ii), which is not applicable.

(3) *Multi-level passenger cars—levels with seating areas other than main levels.* (i) Except as provided in paragraphs (a)(3)(ii) and (a)(3)(iii) of this section, any level other than a main level used for passenger seating in a multi-level passenger car, such as an intermediate level, shall have a minimum of two rescue access windows in each seating area. The rescue access windows shall permit emergency responders to gain access to passengers in the seating area without requiring movement through an interior door or to another level of the car. At least one rescue access window shall be located in each side of the seating area. A rescue access window may be located within an exterior side door in the passenger compartment if it is not practical to place the access window in the side of the seating area. (*See* Figures 2 and 2a of this subpart.)

(ii) Only one rescue access window is required in a seating area in a passenger compartment if—

(A) It is not practical to place a rescue access window in a side of the passenger compartment due to the need to provide accessible accommodations under the Americans with Disabilities Act of 1990;

(B) There are no more than four seats in the seating area; and

(C) A suitable, alternate arrangement for rescue access is provided.

(iii) For passenger cars ordered prior to April 1, 2009, and placed in service prior to April 1, 2011, only one rescue access window is required in a seating area in a passenger compartment if—

(A) It is not practicable to place an access window in a side of the passenger compartment (due to the presence of a structure such as a bathroom, electrical locker, or kitchen); and

(B) There are no more than eight seats in the seating area.

(4) *Cars with a sleeping compartment or similar private compartment*. Each level of a passenger car with a sleeping compartment or a similar private compartment intended to be occupied by a passenger or train crewmember shall have a minimum of one rescue access window in each such compartment. For purposes of this paragraph, a bathroom, kitchen, or locomotive cab is not considered a ''compartment.''

(5) *Dual-function windows*. If, on any level of a passenger car, the emergency window exits installed to meet the minimum requirements of § 238.113 are also intended to function as rescue access windows, the minimum requirements for the number and location of rescue access windows in paragraphs (a)(1) through (a)(4) of this section are also met for that level.

(b) *Ease of operability*. On or after April 1, 2008, each rescue access window must be capable of being removed without unreasonable delay by an emergency responder using either—

(1) A provided external mechanism; or

(2) Tools or implements that are commonly available to the responder in a passenger train emergency.

(c) *Dimensions*. Each rescue access window in a passenger car, including a sleeping car, ordered on or after April 1, 2009, or placed in service for the first time on or after April 1, 2011, shall have an unobstructed opening with minimum dimensions of 26 inches horizontally by 24 inches vertically. A rescue access window located within an exterior side door, in accordance with the requirements of paragraph (a)(3)(i) of this section, may have an unobstructed opening with minimum dimensions of 24 inches horizontally by 26 inches vertically. A seatback is not an obstruction if it can be moved away from the window opening without using a tool or other implement.

(d) *Marking and instructions*. Each rescue access window shall be marked with retroreflective material. A unique and easily recognizable symbol, sign, or other conspicuous marking shall also be used to identify each such window. Legible and understandable window-access instructions, including instructions for removing the window, shall be posted at or near each rescue access window.

[73 FR 6401, Feb. 1, 2008]

§ 238.115 Emergency lighting.

(a) This section applies to each passenger car ordered on or after September 8, 2000, or placed in service for the first time on or after September 9, 2002. This section applies to each level of a multi-level passenger car.

(b) Emergency lighting shall be provided in each passenger car and shall include the following:

(1) A minimum, average illumination level of 1 foot-candle measured at floor level adjacent to each exterior door and each interior door providing access to an exterior door (such as a door opening into a vestibule);

(2) A minimum, average illumination level of 1 foot-candle measured 25 inches above floor level along the center of each aisle and passageway;

(3) A minimum illumination level of 0.1 foot-candle measured 25 inches above floor level at any point along the center of each aisle and passageway; and

(4) A back-up power system capable of:

(i) Operating in all equipment orientations within 45 degrees of vertical;

(ii) Operating after the initial shock of a collision or derailment resulting in

the following individually applied accelerations:

(A) Longitudinal: 8g;

(B) Lateral: 4g; and

(C) Vertical: 4g; and

(iii) Operating all emergency lighting for a period of at least 90 minutes without a loss of more than 40% of the minimum illumination levels specified in this paragraph (b).

§ 238.117 Protection against personal injury.

On or after November 8, 1999, all moving parts, high voltage equipment, electrical conductors and switches, and pipes carrying hot fluids or gases on all passenger equipment shall be appropriately equipped with interlocks or guards to minimize the risk of personal injury. This section does not apply to the interior of a private car.

§ 238.119 Rim-stamped straight-plate wheels.

(a)(1) Except as provided in paragraph (a)(2) of this section, on or after November 8, 1999, no railroad shall place or continue in service any vehicle, other than a private car, that is equipped with a rim-stamped straight-plate wheel if a brake shoe acts on the tread of the wheel for the purpose of slowing the vehicle.

(2) A commuter railroad may continue in service a vehicle equipped with a Class A, rim-stamped straight-plate wheel mounted on an inboard-bearing axle until the railroad exhausts its replacement stock of wheels held as of May 12, 1999, provided the railroad does not modify the operation of the vehicle in any way that would result in increased thermal input to the wheel during braking.

(b) A rim-stamped straight-plate wheel shall not be used as a replacement wheel on a private car that operates in a passenger train if a brake shoe acts on the tread of the wheel for the purpose of slowing the car.

(c) The requirements of this section do not apply to a wheel that is periodically tread-braked for a short duration by automatic circuitry for the sole purpose of cleaning the wheel tread surface.

§ 238.121 Emergency communication.

(a) *PA system (public address system).* (1) *Existing Tier I passenger cars.* On or after January 1, 2012, each Tier I passenger car shall be equipped with a PA system that provides a means for a train crewmember to communicate by voice to passengers of his or her train in an emergency situation.

(2) *New Tier I and all Tier II passenger cars.* Each Tier I passenger car ordered on or after April 1, 2008, or placed in service for the first time April 1, 2010, and all Tier II passenger cars shall be equipped with a PA system that provides a means for a train crewmember to communicate by voice to passengers of his or her train in an emergency situation. The PA system shall also provide a means for a train crewmember to communicate by voice in an emergency situation to persons in the immediate vicinity of his or her train (*e.g.*, persons on the station platform). The PA system may be part of the same system as the intercom system.

(b) *Intercom system.* (1) *New Tier I and all Tier II passenger cars.* Each Tier I passenger car ordered on or after April 1, 2008, or placed in service for the first time on or after April 1, 2010, and all Tier II passenger cars shall be equipped with an intercom system that provides a means for passengers and crewmembers to communicate by voice with each other in an emergency situation. Except as further specified, at least one intercom that is accessible to passengers without using a tool or other implement shall be located in each end (half) of each car. If any passenger car does not exceed 45 feet in length, or if a Tier II passenger car was ordered prior to May 12, 1999, only one such intercom is required. The intercom system may be part of the same system as the PA system.

(2) *Marking and instructions.* The following requirements apply to each Tier I passenger car on or after April 1, 2010 and to all Tier II passenger cars:

(i) The location of each intercom intended for passenger use shall be conspicuously marked with luminescent material; and

(ii) Legible and understandable operating instructions shall be posted at or near each such intercom.

(c) *Back-up power*. PA and intercom systems shall have a back-up power system capable of—

(1) Operating in all equipment orientations within 45 degrees of vertical;

(2) Operating after the initial shock of a collision or derailment resulting in the following individually applied accelerations:

(i) Longitudinal: 8g;

(ii) Lateral: 4g; and

(iii) Vertical: 4g; and

(3) Powering each system to allow intermittent emergency communication for a minimum period of 90 minutes. Intermittent communication shall be considered equivalent to continuous communication during the last 15 minutes of the 90-minute minimum period.

[73 FR 6402, Feb. 1, 2008]

§ 238.123 Emergency roof access.

Except as provided in § 238.441 of this chapter—

(a) *Number and dimensions*. Each passenger car ordered on or after April 1, 2009, or placed in service for the first time on or after April 1, 2011, shall have a minimum of two emergency roof access locations, each with a minimum opening of 26 inches longitudinally (*i.e.*, parallel to the longitudinal axis of the car) by 24 inches laterally.

(b) *Means of access*. Emergency roof access shall be provided by means of a hatch, or a conspicuously marked structural weak point in the roof for access by properly equipped emergency response personnel.

(c) *Location*. Emergency roof access locations shall be situated as practical so that when a car is on its side—

(1) One emergency access location is wholly within each half of the roof as divided top from bottom; and

(2) One emergency access location is wholly within each half of the roof as divided left from right. (*See* Figure 3 to this subpart.)

(d) *Obstructions*. The ceiling space below each emergency roof access location shall be free from wire, cabling, conduit, and piping. This space shall also be free of any rigid secondary structure (*e.g.*, a diffuser or diffuser support, lighting back fixture, mounted PA equipment, or luggage rack) where practicable. If emergency roof access is provided by means of a hatch, it shall be possible to push interior panels or liners out of their retention devices and into the interior of the vehicle after removing the hatch. If emergency roof access is provided by means of a structural weak point, it shall be permissible to cut through interior panels, liners, or other non-rigid secondary structures after making the cutout hole in the roof, provided any such additional cutting necessary to access the interior of the vehicle permits a minimum opening of the dimensions specified in paragraph (a) to be maintained.

(e) *Marking and instructions*. Each emergency roof access location shall be conspicuously marked with retroreflective material of contrasting color. As further specified, legible and understandable instructions shall be posted at or near each such location. If emergency roof access is provided by means of a structural weak point—

(1) The retroreflective material shall conspicuously mark the line along which the roof skin shall be cut; and

(2) A sign plate with a retroreflective border shall also state as follows:

CAUTION—DO NOT USE FLAME CUTTING DEVICES

CAUTION—WARN PASSENGERS BEFORE CUTTING

CUT ALONG DASHED LINE TO GAIN ACCESS

ROOF CONSTRUCTION—[STATE RELEVANT DETAILS]

[73 FR 6403, Feb. 1, 2008]

FIGURE 1 TO SUBPART B OF PART 238—EXAMPLE OF LOCATION AND STAGGERING OF EMERGENCY WINDOW EXITS—§ 238.113

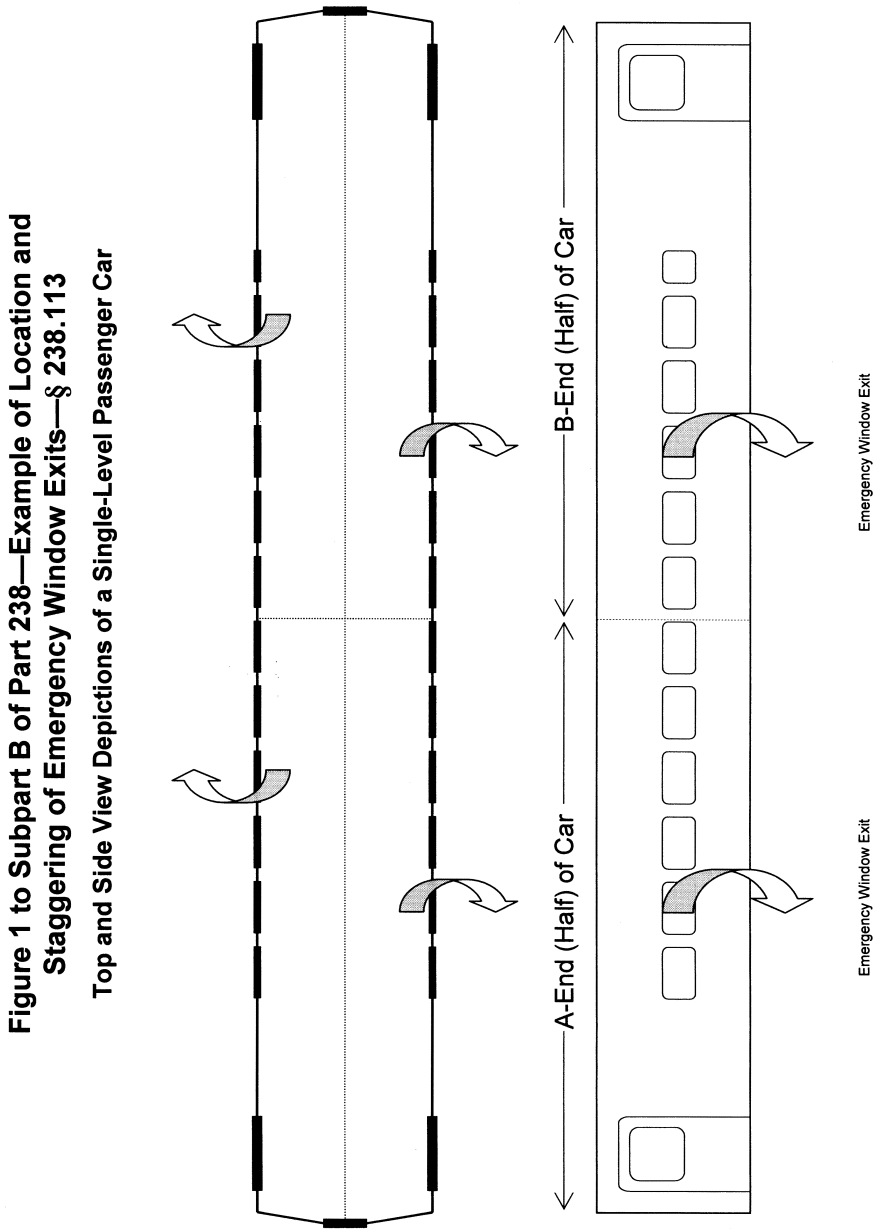

[73 FR 6403, Feb. 1, 2008]

FIGURE 1A TO SUBPART B OF PART 238—EXAMPLE OF LOCATION OF RESCUE ACCESS WINDOWS—§ 238.114

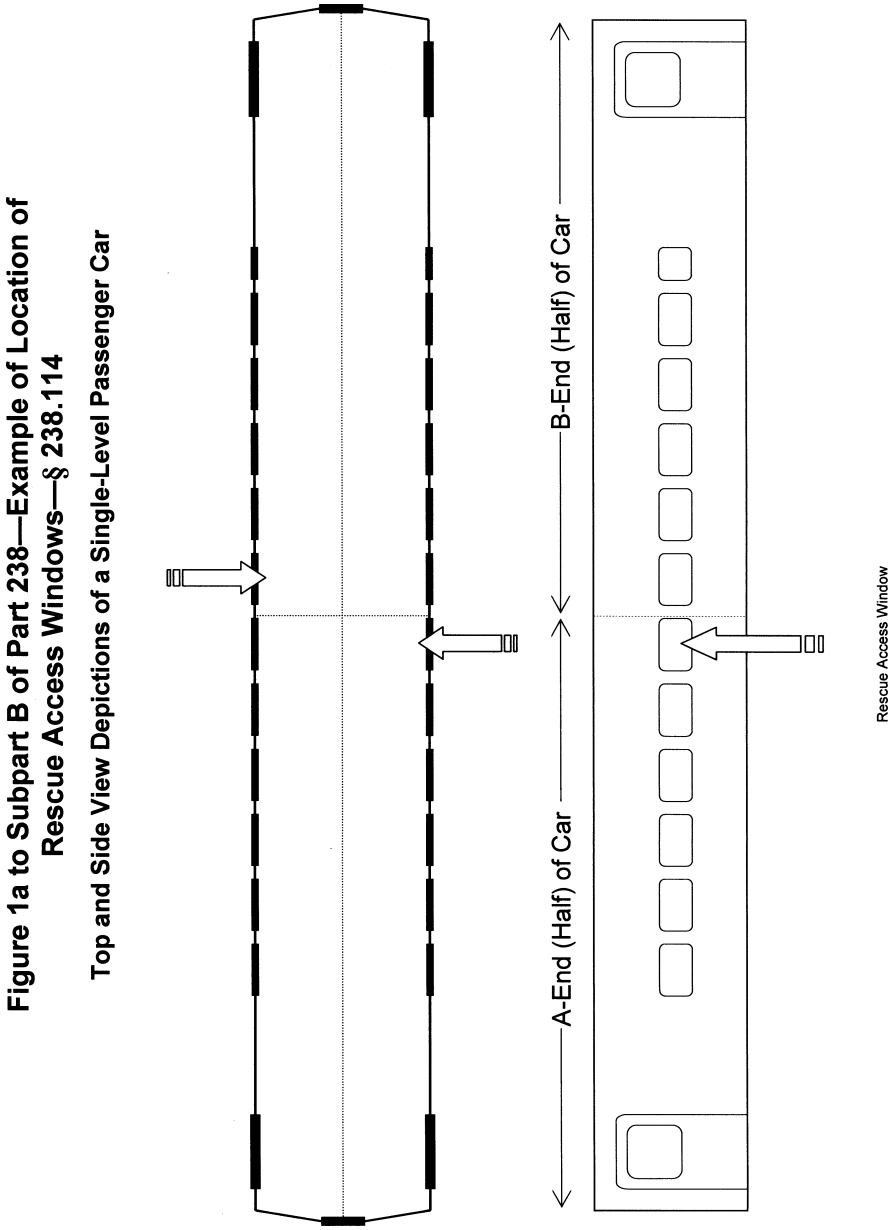

[73 FR 6403, Feb. 1, 2008]

FIGURE 1B TO SUBPART B OF PART 238—EXAMPLE OF LOCATION AND STAGGERING OF EMERGENCY WINDOW EXITS AND LOCATION OF RESCUE ACCESS WINDOWS—§§ 238.113 AND 238.114

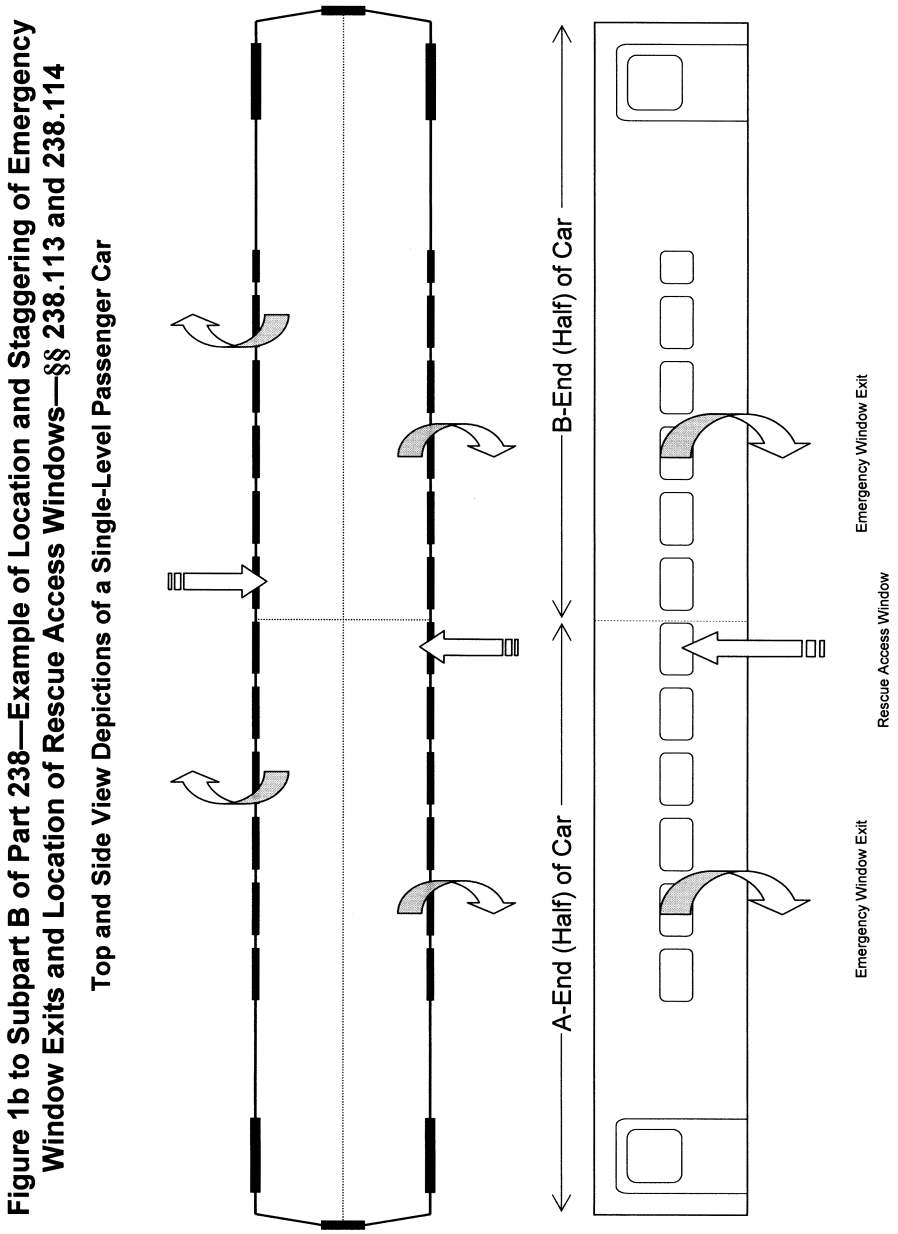

[73 FR 6403, Feb. 1, 2008]

FIGURE 1C TO SUBPART B OF PART 238—EXAMPLE OF A PASSENGER COMPARTMENT INCLUDING A VESTIBULE CONNECTED BY AN OPEN PASSAGEWAY AND EXCLUDING A VESTIBULE SEPARATED BY AN INTERIOR DOOR—§§ 238.113 AND 238.114

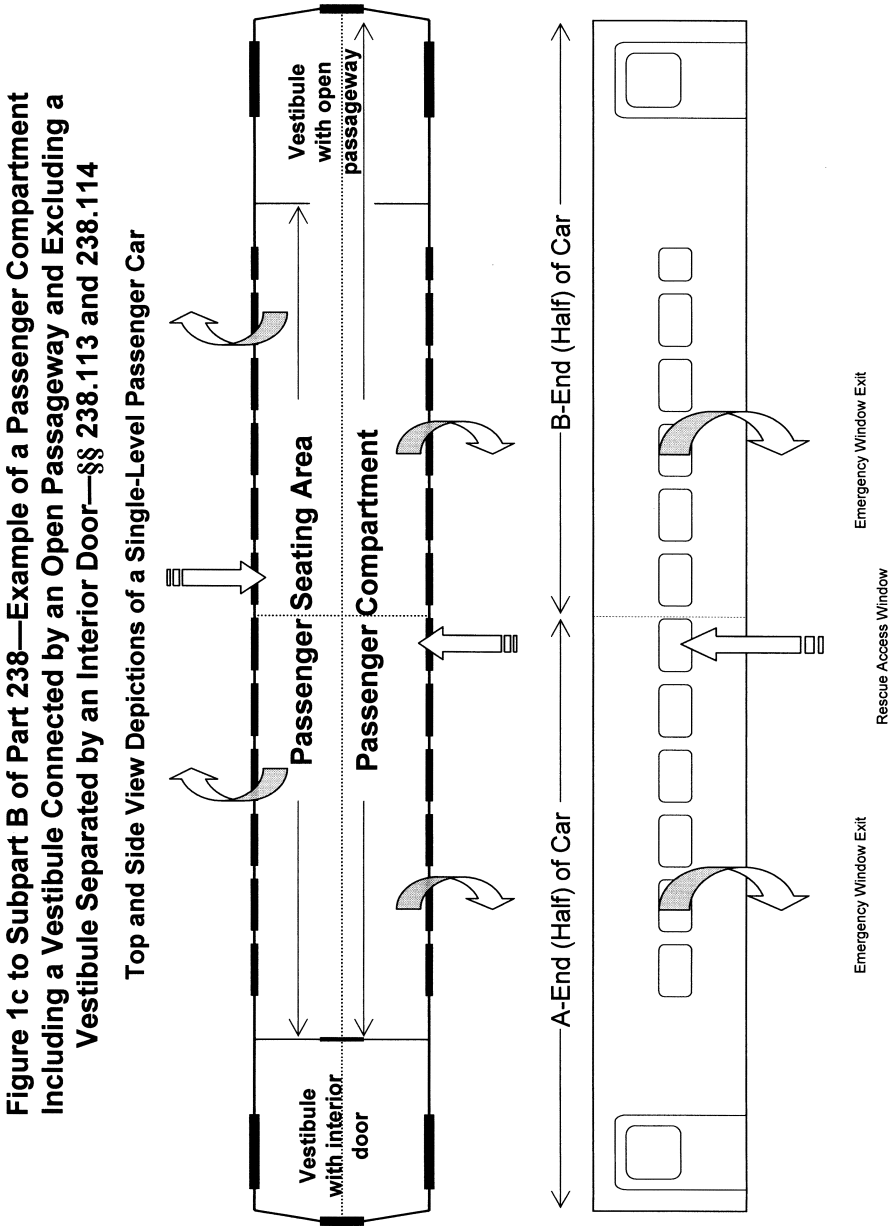

[73 FR 6403, Feb. 1, 2008]

FIGURE 2 TO SUBPART B OF PART 238—EXAMPLE OF A MULTI-LEVEL CAR COMPLYING WITH WINDOW LOCATION AND STAGGERING REQUIREMENTS—§§ 238.113 AND 238.114

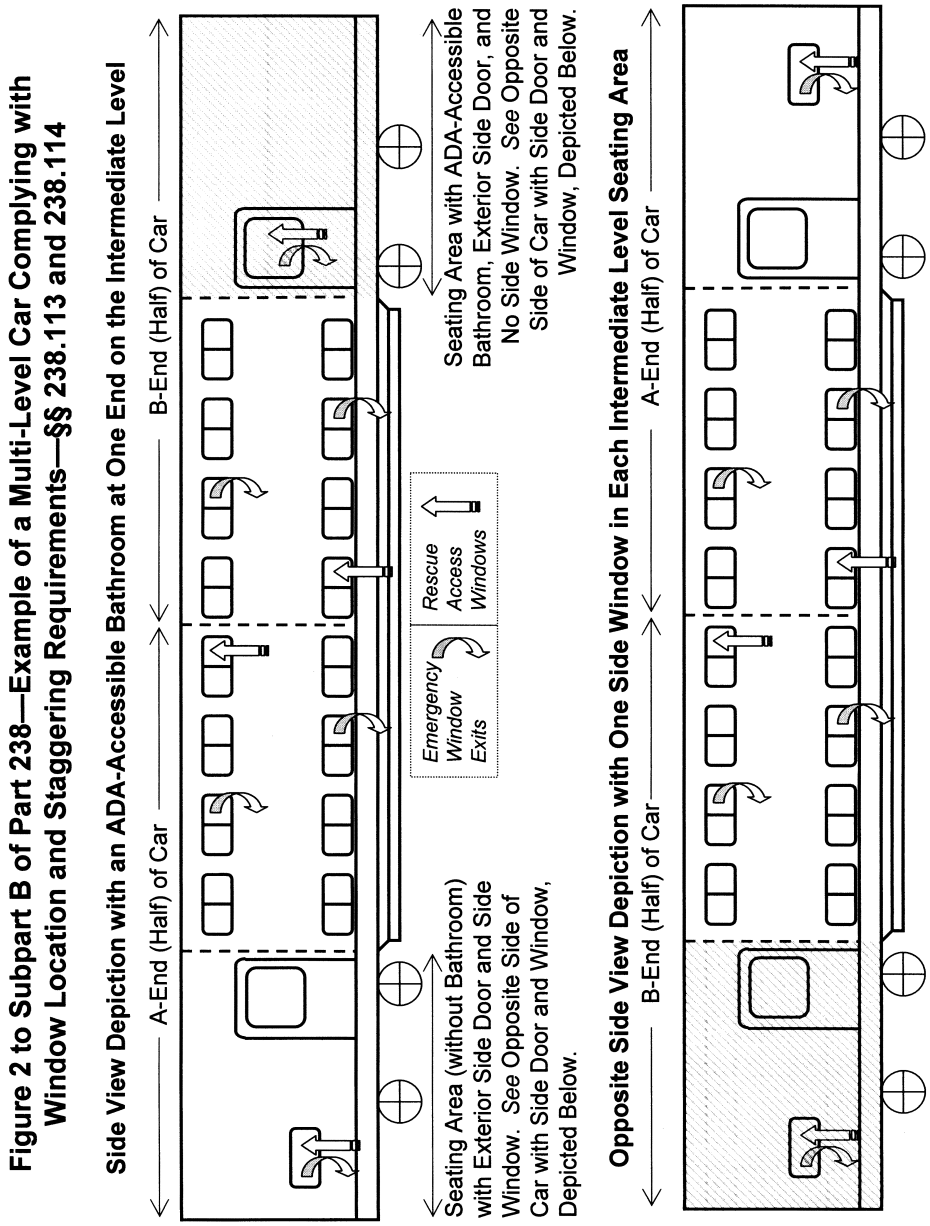

[73 FR 6403, Feb. 1, 2008]

FIGURE 2A TO SUBPART B OF PART 238—EXAMPLE OF AN INTERMEDIATE LEVEL SEATING AREA OF A MULTI-LEVEL CAR COMPLYING WITH WINDOW LOCATION REQUIREMENTS—§§ 238.113 AND 238.114

Figure 2a to Subpart B of Part 238—Example of an Intermediate Level Seating Area of a Multi-Level Car Complying with Window Location Requirements—§§ 238.113 and 238.114

Top View Depiction of an Intermediate Level Seating Area with an ADA-Accessible Bathroom

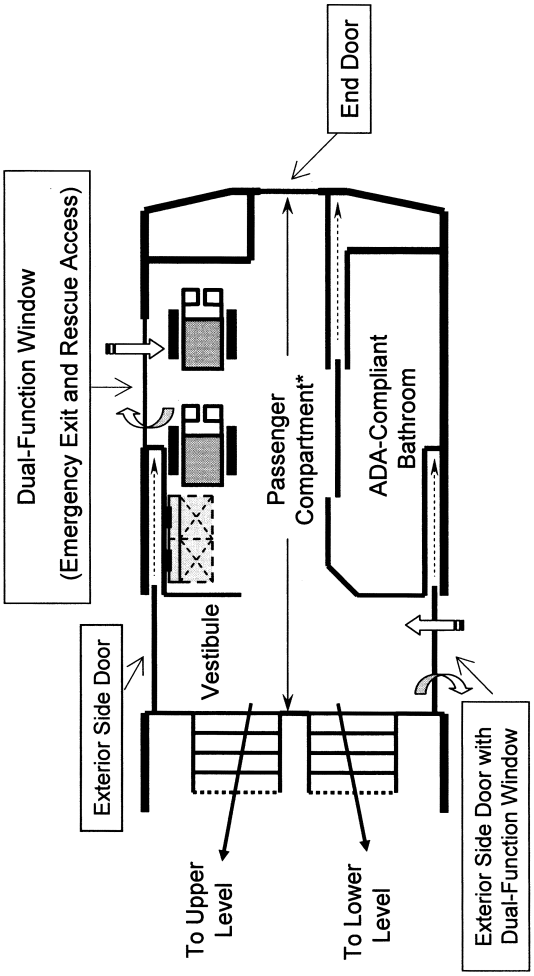

* The passenger compartment in this example includes the vestibule and extends to the point where the stairs begin because there is an open passageway leading to the vestibule. If an interior door separates the vestibule from the seating area, the passenger compartment would only extend to the interior vestibule door.

[73 FR 6403, Feb. 1, 2008]

FIGURE 2B TO SUBPART B OF PART 238—EXAMPLE OF AN INTERMEDIATE LEVEL SEATING AREA OF A MULTI-LEVEL CAR COMPLYING WITH WINDOW LOCATION REQUIREMENTS—§§ 238.113 AND 238.114

Figure 2b to Subpart B of Part 238—Example of an Intermediate Level Seating Area of a Multi-Level Car Complying with Window Location Requirements—§§ 238.113 and 238.114

Top View Depiction of an Intermediate Level Seating Area with Two Side Windows

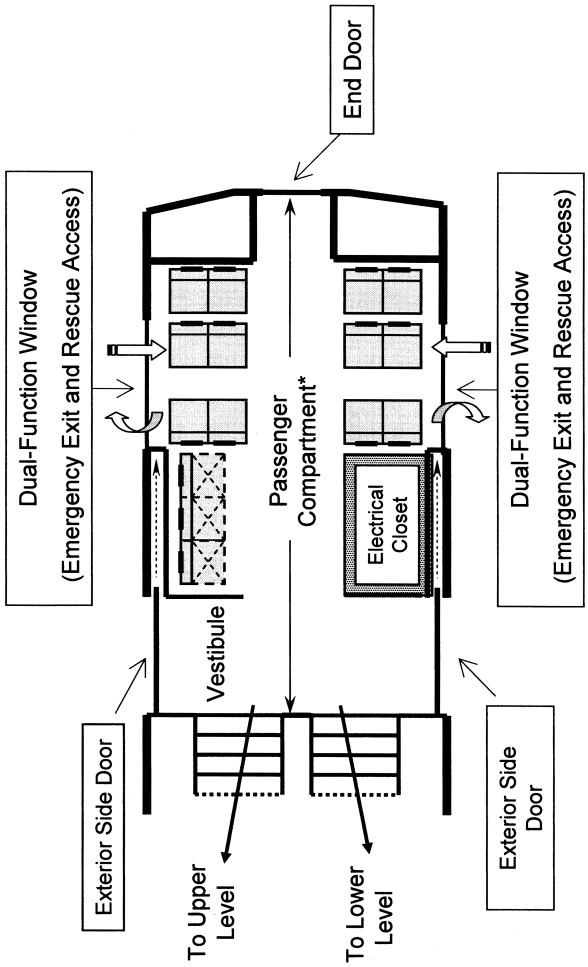

* The passenger compartment in this example includes the vestibule and extends to the point where the stairs begin because there is an open passageway leading to the vestibule. If an interior door separates the vestibule from the seating area, the passenger compartment would only extend to the interior vestibule door.

[73 FR 6403, Feb. 1, 2008]

FIGURE 3 TO SUBPART B OF PART 238—EXAMPLE OF LOCATION AND MARKING OF STRUCTURAL WEAK POINTS ON ROOF OF PASSENGER CAR—§ 238.123

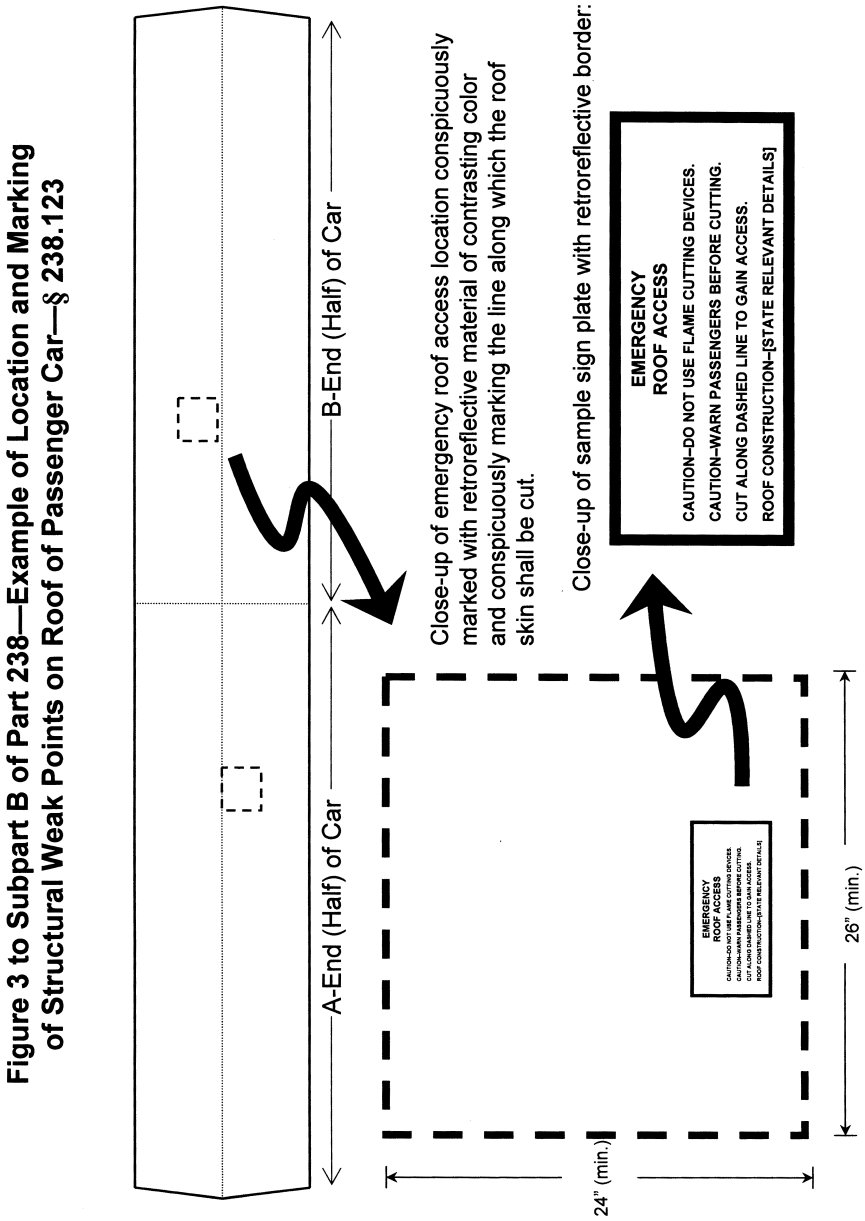

[73 FR 6403, Feb. 1, 2008]

Subpart C—Specific Requirements for Tier I Passenger Equipment

§ 238.201 Scope/alternative compliance.

(a) *Scope.* (1) This subpart contains requirements for railroad passenger equipment operating at speeds not exceeding 125 miles per hour. As stated in § 238.229, all such passenger equipment remains subject to the safety appliance requirements contained in Federal statute at 49 U.S.C. chapter 203 and in FRA regulations at part 231 and § 232.2 of this chapter. Unless otherwise specified, these requirements only apply to passenger equipment ordered on or after September 8, 2000 or placed in service for the first time on or after September 9, 2002.

(2) The structural standards of this subpart (§ 238.203—static end strength; § 238.205—anti-climbing mechanism; § 238.207—link between coupling mechanism and car body; § 238.209—forward-facing end structure of locomotives; § 238.211—collision posts; § 238.213—corner posts; § 238.215—rollover strength; § 238.217—side structure; § 238.219—truck-to-car-body attachment; and § 238.223—locomotive fuel tanks) do not apply to passenger equipment if used exclusively on a rail line:

(i) With no public highway-rail grade crossings;

(ii) On which no freight operations occur at any time;

(iii) On which only passenger equipment of compatible design is utilized; and

(iv) On which trains operate at speeds not exceeding 79 mph. Any such passenger equipment remains subject to the requirements of § 229.141 of this chapter, as applicable.

(b) *Alternative compliance.* Passenger equipment of special design shall be deemed to comply with this subpart, other than § 238.203, for the service environment in which the petitioner proposes to operate the equipment if the FRA Associate Administrator for Safety determines under paragraph (c) of this section that the equipment provides at least an equivalent level of safety in such environment with respect to the protection of its occupants from serious injury in the case of a derailment or collision. In making a determination under paragraph (c) the Associate Administrator shall consider, as a whole, all of those elements of casualty prevention or mitigation relevant to the integrity of the equipment that are addressed by the requirements of this subpart.

(c)(1) The Associate Administrator may only make a finding of equivalent safety and compliance with this subpart, other than § 238.203, based upon a submission of data and analysis sufficient to support that determination. The petition shall include:

(i) The information required by § 238.21(c);

(ii) Information, including detailed drawings and materials specifications, sufficient to describe the actual construction of the equipment of special design;

(iii) Engineering analysis sufficient to describe the likely performance of the equipment in derailment and collision scenarios pertinent to the safety requirements for which compliance is required and for which the equipment does not conform to the specific requirements of this subpart; and

(iv) A quantitative risk assessment, incorporating the design information and engineering analysis described in this paragraph, demonstrating that the equipment, as utilized in the service environment for which recognition is sought, presents no greater hazard of serious personal injury than equipment that conforms to the specific requirements of this subpart.

(2) Any petition made under this paragraph is subject to the procedures set forth in § 238.21, and will be disposed of in accordance with § 238.21(g).

[64 25660, May 12, 1999, as amended at 67 FR 19990, Apr. 23, 2002; 71 FR 36916, June 28, 2006]

§ 238.203 Static end strength.

(a)(1) Except as further specified in this paragraph or in paragraph (d), on or after November 8, 1999 all passenger equipment shall resist a minimum static end load of 800,000 pounds applied on the line of draft without permanent deformation of the body structure.

(2) For a passenger car or a locomotive, the static end strength of unoccupied volumes may be less than 800,000 pounds if:

(i) Energy absorbing structures are used as part of a crash energy management design of the passenger car or locomotive, and

(ii) The passenger car or locomotive resists a minimum static end load of 800,000 pounds applied on the line of draft at the ends of its occupied volume without permanent deformation of the body structure.

(3) For a locomotive placed in service prior to November 8, 1999, as an alternative to resisting a minimum static end load of 800,000 pounds applied on the line of draft without permanent deformation of the body structure, the locomotive shall resist a horizontal load of 1,000,000 pounds applied along the longitudinal center line of the locomotive at a point on the buffer beam construction 12 inches above the center line of draft without permanent deformation of the body structure. The application of this load shall not be distributed over an area greater than 6 inches by 24 inches. The alternative specified in this paragraph is not applicable to a cab car or an MU locomotive.

(4) The requirements of this paragraph do not apply to:

(i) A private car; or

(ii) Unoccupied passenger equipment operating at the rear of a passenger train.

(b) Passenger equipment placed in service before November 8, 1999 is presumed to comply with the requirements of paragraph (a)(1) of this section, unless the railroad operating the equipment has knowledge, or FRA makes a showing, that such passenger equipment was not built to the requirements specified in paragraph (a)(1).

(c) When overloaded in compression, the body structure of passenger equipment shall be designed, to the maximum extent possible, to fail by buckling or crushing, or both, of structural members rather than by fracture of structural members or failure of structural connections.

(d) *Grandfathering of non-compliant equipment for use on a specified rail line or lines.*—(1) *Grandfathering approval is equipment and line specific.* Grandfathering approval of non-compliant equipment under this paragraph is limited to usage of the equipment on a particular rail line or lines. Before grandfathered equipment can be used on another rail line, a railroad must file and secure approval of a grandfathering petition under paragraph (d)(3) of this section.

(2) *Temporary usage of non-compliant equipment.* Any passenger equipment placed in service on a rail line or lines before November 8, 1999 that does not comply with the requirements of paragraph (a)(1) may continue to be operated on that particular line or (those particular lines) if the operator of the equipment files a petition seeking grandfathering approval under paragraph (d)(3) before November 8, 1999. Such usage may continue while the petition is being processed, but in no event later than May 8, 2000, unless the petition is approved.

(3) *Petitions for grandfathering.* Petitions for grandfathering shall include:

(i) The name, title, address, and telephone number of the primary person to be contacted with respect to the petition;

(ii) Information, including detailed drawings and material specifications, sufficient to describe the actual construction of the equipment;

(iii) Engineering analysis sufficient to describe the likely performance of the static end strength of the equipment and the likely performance of the equipment in derailment and collision scenarios pertinent to the equipment's static end strength;

(iv) A description of risk mitigation measures that will be employed in connection with the usage of the equipment on a specified rail line or lines to decrease the likelihood of accidents involving the use of the equipment; and

(v) A quantitative risk assessment, incorporating the design information, engineering analysis, and risk mitigation measures described in this paragraph, demonstrating that the use of the equipment, as utilized in the service environment for which recognition is sought, is in the public interest and is consistent with railroad safety.

(e) *Service.* Three copies of each petition shall be submitted to the Associate Administrator for Safety, Federal Railroad Administration, 1120 Vermont Ave., Mail Stop 25, Washington, DC 20590.

(f) *Federal Register notice.* FRA will publish a notice in the FEDERAL REGISTER concerning each petition under paragraph (d) of this section.

(g) *Comment.* Not later than 30 days from the date of publication of the notice in the FEDERAL REGISTER concerning a petition under paragraph (d) of this section, any person may comment on the petition.

(1) Each comment shall set forth specifically the basis upon which it is made, and contain a concise statement of the interest of the commenter in the proceeding.

(2) Each comment shall be submitted to the DOT Central Docket Management System, Nassif Building, Room Pl–401, 400 Seventh Street, SW, Washington, DC 20590, and shall contain the assigned docket number for that proceeding. The form of such submission may be in written or electronic form consistent with the standards and requirements established by the Central Docket Management System and posted on its web site at *http://dms.dot.gov*.

(h) *Disposition of petitions.* (1) If the Administrator finds it necessary or desirable, FRA will conduct a hearing on a petition in accordance with the procedures provided in § 211.25 of this chapter.

(2) If FRA finds that the petition complies with the requirements of this section and that the proposed usage is in the public interest and consistent with railroad safety, the petition will be granted, normally within 90 days of its receipt. If the petition is neither granted nor denied within 90 days, the petition remains pending for decision. FRA may attach special conditions to the approval of the petition. Following the approval of a petition, FRA may reopen consideration of the petition for cause stated.

(3) If FRA finds that the petition does not comply with the requirements of this section or that the proposed usage is not in the public interest and consistent with railroad safety, the petition will be denied, normally within 90 days of its receipt.

(4) When FRA grants or denies a petition, or reopens consideration of the petition, written notice is sent to the petitioner and other interested parties.

[64 FR 25660, May 12, 1999, as amended at 64 FR 70196, Dec. 16, 1999; 67 FR 19991, Apr. 23, 2002]

§ 238.205 Anti-climbing mechanism.

(a) Except as provided in paragraph (b) of this section, all passenger equipment placed in service for the first time on or after September 8, 2000 shall have at both the forward and rear ends an anti-climbing mechanism capable of resisting an upward or downward vertical force of 100,000 pounds without failure. When coupled together in any combination to join two vehicles, AAR Type H and Type F tight-lock couplers satisfy this requirement.

(b) Except for a cab car or an MU locomotive, each locomotive ordered on or after September 8, 2000, or placed in service for the first time on or after September 9, 2002, shall have an anti-climbing mechanism at its forward end capable of resisting both an upward and downward vertical force of 200,000 pounds without failure. Locomotives required to be constructed in accordance with subpart D of part 229 of this chapter shall have an anti-climbing mechanism in compliance with § 229.206 of this chapter, in lieu of the requirements of this paragraph.

[64 FR 25660, May 12, 1999, as amended at 67 FR 19991, Apr. 23, 2002; 71 FR 36916, June 28, 2006]

§ 238.207 Link between coupling mechanism and car body.

All passenger equipment placed in service for the first time on or after September 8, 2000 shall have a coupler carrier at each end designed to resist a vertical downward thrust from the coupler shank of 100,000 pounds for any normal horizontal position of the coupler, without permanent deformation. For passenger equipment that is connected by articulated joints that comply with the requirements of § 238.205(a), such passenger equipment also complies with the requirements of this section.

§ 238.209 Forward-facing end structure of locomotives.

The skin covering the forward-facing end of each locomotive shall be:

(a) Equivalent to a ½ inch steel plate with a 25,000 pounds-per-square-inch yield strength—material of a higher yield strength may be used to decrease the required thickness of the material provided at least an equivalent level of strength is maintained;

(b) Designed to inhibit the entry of fluids into the occupied cab area of the equipment; and

(c) Affixed to the collision posts or other main vertical structural members of the forward end structure so as to add to the strength of the end structure.

(d) As used in this section, the term ''skin'' does not include forward-facing windows and doors.

§ 238.211 Collision posts.

(a) Except as further specified in this paragraph and paragraphs (b) and (c) of this section—

(1) All passenger equipment placed in service for the first time on or after September 8, 2000 shall have either:

(i) Two full-height collision posts, located at approximately the one-third points laterally, at each end. Each collision post shall have an ultimate longitudinal shear strength of not less than 300,000 pounds at a point even with the top of the underframe member to which it is attached. If reinforcement is used to provide the shear value, the reinforcement shall have full value for a distance of 18 inches up from the underframe connection and then taper to a point approximately 30 inches above the underframe connection; or

(ii) An equivalent end structure that can withstand the sum of forces that each collision post in paragraph (a)(1)(i) of this section is required to withstand. For analysis purposes, the required forces may be assumed to be evenly distributed at the end structure at the underframe joint.

(2) The requirements of this paragraph do not apply to unoccupied passenger equipment operating in a passenger train, or to the rear end of a locomotive if the end is unoccupied by design.

(b) Each locomotive, including a cab car and an MU locomotive, ordered on or after September 8, 2000, or placed in service for the first time on or after September 9, 2002, shall have at its forward end, in lieu of the structural protection described in paragraph (a) of this section, either:

(1) Two forward collision posts, located at approximately the one-third points laterally, each capable of withstanding:

(i) A 500,000-pound longitudinal force at the point even with the top of the underframe, without exceeding the ultimate strength of the joint; and

(ii) A 200,000-pound longitudinal force exerted 30 inches above the joint of the post to the underframe, without exceeding the ultimate strength; or

(2) An equivalent end structure that can withstand the sum of the forces that each collision post in paragraph (b)(1)(i) of this section is required to withstand.

(c) The end structure requirements in paragraphs (a) and (b) of this section apply only to the ends of a semi-permanently coupled consist of articulated units, provided that:

(1) The railroad submits to the FRA Associate Administrator for Safety under the procedures specified in § 238.21 a documented engineering analysis establishing that the articulated connection is capable of preventing disengagement and telescoping to the same extent as equipment satisfying the anti-climbing and collision post requirements contained in this subpart; and

(2) FRA finds the analysis persuasive.

[64 FR 25660, May 12, 1999, as amended at 67 FR 19991, Apr. 23, 2002]

§ 238.213 Corner posts.

(a) Each passenger car shall have at each end of the car, placed ahead of the occupied volume, two full-height corner posts capable of resisting:

(1) A horizontal load of 150,000 pounds at the point of attachment to the underframe without failure;

(2) A horizontal load of 20,000 pounds at the point of attachment to the roof structure without failure; and

(3) A horizontal load of 30,000 pounds applied 18 inches above the top of the floor without permanent deformation.

(b) For purposes of this section, the orientation of the applied horizontal loads shall range from longitudinal inward to transverse inward.

§ 238.215 Rollover strength.

(a) Each passenger car shall be designed to rest on its side and be uniformly supported at the top (''roof rail''), the bottom cords (''side sill'') of the side frame, and, if bi-level, the intermediate floor rail. The allowable stress in the structural members of the occupied volumes for this condition shall be one-half yield or one-half the critical buckling stress, whichever is less. Local yielding to the outer skin of the passenger car is allowed provided that the resulting deformations in no way intrude upon the occupied volume of the car.

(b) Each passenger car shall also be designed to rest on its roof so that any damage in occupied areas is limited to roof sheathing and framing. Other than roof sheathing and framing, the allowable stress in the structural members of the occupied volumes for this condition shall be one-half yield or one-half the critical buckling stress, whichever is less. Deformation to the roof sheathing and framing is allowed to the extent necessary to permit the vehicle to be supported directly on the top chords of the side frames and end frames.

§ 238.217 Side structure.

Each passenger car shall comply with the following:

(a) *Side posts and corner braces.* (1) For modified girder, semi-monocoque, or truss construction, the sum of the section moduli in inches^3—about a longitudinal axis, taken at the weakest horizontal section between the side sill and side plate—of all posts and braces on each side of the car located between the body corner posts shall be not less than 0.30 multiplied by the distance in feet between the centers of end panels.

(2) For modified girder or semi-monocoque construction only, the sum of the section moduli in inches^3—about a transverse axis, taken at the weakest horizontal section between the side sill and side plate—of all posts, braces and pier panels, to the extent available, on each side of the car located between body corner posts shall be not less than 0.20 multiplied by the distance in feet between the centers of end panels.

(3) The center of an end panel is the point midway between the center of the body corner post and the center of the adjacent side post.

(4) The minimum section moduli or thicknesses specified in paragraph (a) of this section may be adjusted in proportion to the ratio of the yield strength of the material used to that of mild open-hearth steel for a car whose structural members are made of a higher strength steel.

(b) *Sheathing.* (1) Outside sheathing of mild, open-hearth steel when used flat, without reinforcement (other than side posts) in a side frame of modified girder or semi-monocoque construction shall not be less than 1/8 inch nominal thickness. Other metals may be used of a thickness in inverse proportion to their yield strengths.

(2) Outside metal sheathing of less than ⅛ inch thickness may be used only if it is reinforced so as to produce at least an equivalent sectional area at a right angle to reinforcements as that of the flat sheathing specified in paragraph (b)(1) of this section.

(3) When the sheathing used for truss construction serves no load-carrying function, the minimum thickness of that sheathing shall be not less than 40 percent of that specified in paragraph (b)(1) of this section.

§ 238.219 Truck-to-car-body attachment.

Passenger equipment shall have a truck-to-car-body attachment with an ultimate strength sufficient to resist without failure the following individually applied loads: 2g vertically on the mass of the truck; and 250,000 pounds in any horizontal direction on the truck, along with the resulting vertical reaction to this load. For purposes of this section, the mass of the truck includes axles, wheels, bearings, the truck-mounted brake system, suspension system components, and any other component attached to the truck by design.

[67 FR 19991, Apr. 23, 2002]

§ 238.221 Glazing.

(a) Passenger equipment shall comply with the applicable Safety Glazing Standards contained in part 223 of this chapter, if required by that part.

(b) Each exterior window on a locomotive cab and a passenger car shall remain in place when subjected to:

(1) The forces described in part 223 of this chapter; and

(2) The forces due to air pressure differences caused when two trains pass at the minimum separation for two adjacent tracks, while traveling in opposite directions, each train traveling at the maximum authorized speed.

§ 238.223 Locomotive fuel tanks.

Locomotive fuel tanks shall comply with either the following or an industry standard providing at least an equivalent level of safety if approved by FRA under § 238.21:

(a) *External fuel tanks.* External locomotive fuel tanks shall comply with the requirements contained in Appendix D to this part.

(b) *Internal fuel tanks.* (1) Internal locomotive fuel tanks shall be positioned in a manner to reduce the likelihood of accidental penetration from roadway debris or collision.

(2) Internal fuel tank vent systems shall be designed so they do not become a path of fuel loss in any tank orientation due to a locomotive overturning.

(3) Internal fuel tank bulkheads and skin shall, at a minimum, be equivalent to a 5/16-inch thick steel plate with a yield strength of 25,000 pounds per square inch. Material of a higher yield strength may be used to decrease the required thickness of the material provided at least an equivalent level of strength is maintained. Skid plates are not required.

[67 FR 19991, Apr. 23, 2002]

§ 238.225 Electrical system.

All passenger equipment shall comply with the following:

(a) *Conductors.* Conductor sizes shall be selected on the basis of current-carrying capacity, mechanical strength, temperature, flexibility requirements, and maximum allowable voltage drop. Current-carrying capacity shall be derated for grouping and for operating temperature.

(b) *Main battery system.* (1) The main battery compartment shall be isolated from the cab and passenger seating areas by a non-combustible barrier.

(2) Battery chargers shall be designed to protect against overcharging.

(3) If batteries are of the type to potentially vent explosive gases, the battery compartment shall be adequately ventilated to prevent the accumulation of explosive concentrations of these gases.

(c) *Power dissipation resistors.* (1) Power dissipating resistors shall be adequately ventilated to prevent overheating under worst-case operating conditions as determined by the railroad.

(2) Power dissipation grids shall be designed and installed with sufficient isolation to prevent combustion.

(3) Resistor elements shall be electrically insulated from resistor frames, and the frames shall be electrically insulated from the supports that hold them.

(d) *Electromagnetic interference and compatibility.* (1) The operating railroad shall ensure electromagnetic compatibility of the safety-critical equipment systems with their environment. Electromagnetic compatibility may be achieved through equipment design or changes to the operating environment.

(2) The electronic equipment shall not produce electrical noise that affects the safe performance of train line control and communications or wayside signaling systems.

(3) To contain electromagnetic interference emissions, suppression of transients shall be at the source wherever possible.

(4) All electronic equipment shall be self-protected from damage or improper operation, or both, due to high voltage transients and long-term overvoltage or under-voltage conditions. This includes protection from both power frequency and harmonic effects as well as protection from radio frequency signals into the microwave frequency range.

§ 238.227 Suspension system.

On or after November 8, 1999—

(a) All passenger equipment shall exhibit freedom from hunting oscillations at all operating speeds. If hunting oscillations do occur, a railroad shall immediately take appropriate action to prevent derailment. For purposes of this paragraph, hunting oscillations shall be considered lateral oscillations

of trucks that could lead to a dangerous instability.

(b) All passenger equipment intended for service above 110 mph shall demonstrate stable operation during prerevenue service qualification tests at all operating speeds up to 5 mph in excess of the maximum intended operating speed under worst-case conditions—including component wear—as determined by the operating railroad.

(c) Nothing in this section shall affect the requirements of part 213 of this chapter as they apply to passenger equipment as provided in that part.

§ 238.229 Safety appliances—general.

(a) Except as provided in this part, all passenger equipment continues to be subject to the safety appliance requirements contained in Federal statute at 49 U.S.C. chapter 203 and in Federal regulations at part 231 of this chapter.

(b) Except as provided in this part, FRA interprets the provisions in part 231 of this chapter that expressly mandate that the manner of application of a safety appliance be a bolt, rivet, or screw to mean that the safety appliance and any related bracket or support used to attach that safety appliance to the equipment shall be so affixed to the equipment. Specifically, FRA prohibits the use of welding as a method of attachment of any such safety appliance or related bracket or support. A ''safety appliance bracket or support'' means a component or part attached to the equipment for the sole purpose of securing or attaching of the safety appliance. FRA does allow the welded attachment of a brace or stiffener used in connection with a mechanically fastened safety appliance. In order to be considered a ''brace'' or ''stiffener,'' the component or part shall not be necessary for the attachment of the safety appliance to the equipment and is used solely to provide extra strength or steadiness to the safety appliance.

(c) *Welded Safety Appliances.* (1) Passenger equipment placed in service prior to January 1, 2007, that is equipped with a safety appliance, required by the ''manner of application'' provisions in part 231 of this chapter to be attached by a mechanical fastener (*i.e.*, bolts, rivets, or screws), and the safety appliance is mechanically fastened to a bracket or support that is attached to the equipment by welding may continue to be used in service provided all of the requirements in paragraphs (e) through (k) of this section are met. The welded safety appliance bracket or support only needs to receive the initial visual inspection required under paragraph (g)(1) of this section if all of the following conditions are met:

(i) The welded safety appliance bracket or support meets all of the conditions contained in § 238.230(b)(1) for being considered part of the car body;

(ii) The weld on the safety appliance bracket or support does not contain any defect as defined in paragraph (d) of this section; and

(iii) The railroad submits a written list to FRA identifying each piece of passenger equipment equipped with a welded safety appliance bracket or support as described in paragraph (c)(1)(i) and (c)(1)(ii) of this section and provides a description of the specific safety appliance bracket or support.

(2) Passenger equipment placed in service prior to January 1, 2007, that is equipped with a safety appliance that is directly attached to the equipment by welding (*i.e.*, no mechanical fastening of any kind) shall be considered defective and immediately handled for repair pursuant to the requirements contained in § 238.17(e) unless the railroad meets the following:

(i) The railroad submits a written list to FRA that identifies each piece of passenger equipment equipped with a welded safety appliance as described in paragraph (c)(2) of this section and provides a description of the specific safety appliance; and

(ii) The involved safety appliance(s) on such equipment are inspected and handled pursuant to the requirements contained in paragraphs (g) through (k) of this section.

(d) *Defective welded safety appliance or welded safety appliance bracket or support.* Passenger equipment with a welded safety appliance or a welded safety appliance bracket or support will be considered defective and shall be handled in accordance with § 238.17(e) if

any part or portion of the weld contains a defect. Any repairs made to such equipment shall be in accordance with the inspection plan required in paragraph (g) of this section and the remedial actions identified in paragraph (j) of this section. A defect for the purposes of this section means a crack or fracture of any visibly discernible length or width. When appropriate, civil penalties for improperly using or hauling a piece of equipment with a defective welded safety appliance or safety appliance bracket or support addressed in this section will be assessed as an improperly applied safety appliance pursuant to the penalty schedule contained in Appendix A to part 231 of this chapter under the appropriate defect code contained therein.

(e) *Identification of equipment.* The railroad shall submit a written list to FRA that identifies each piece of passenger equipment equipped with a welded safety appliance bracket or support by January 1, 2007. Passenger equipment placed in service prior to January 1, 2007, but not discovered until after January 1, 2007, shall be immediately added to the railroad's written list and shall be immediately inspected in accordance with paragraph (g) through (k) of this section. The written list submitted by the railroad shall contain the following:

(1) The equipment number;

(2) The equipment type;

(3) The safety appliance bracket(s) or support(s) affected;

(4) Any equipment and any specific safety appliance bracket(s) or supports(s) on the equipment that will not be subject to the inspection plan required in paragraph (g) of this section;

(5) A detailed explanation for any such exclusion recommended in paragraph (e)(4) of this section;

(f) FRA's Associate Administrator for Safety reserves the right to disapprove any exclusion recommended by the railroad in paragraphs (c)(2)(i) and (d)(4) of this section and will provide written notification to the railroad of any such determination.

(g) *Inspection Plans.* The railroad shall adopt and comply with and submit to FRA upon request a written safety appliance inspection plan. At a minimum, the plan shall include the following:

(1) Except as provided in paragraph (c)(1) of this section, an initial visual inspection (within 1 year of date of publication) and periodic re-inspections (at intervals not to exceed 6 years) of each welded safety appliance bracket or support identified in paragraph (e) of this section. If significant disassembly of a car is necessary to visually inspect the involved safety appliance bracket or support, the initial visual inspection may be conducted at the equipment's first periodic brake equipment maintenance interval pursuant to § 238.309 occurring after January 1, 2007.

(2) Identify the personnel that will conduct the initial and periodic inspections and any training those individuals are required to receive in accordance with the criteria contained in paragraph (h) of this section.

(3) Identify the specific procedures and criteria for conducting the initial and periodic safety appliance inspections in accordance with the requirements and criteria contained in paragraph (i) of this section.

(4) Identify when and what type of potential repairs or potential remedial action will be required for any defective welded safety appliance bracket or support discovered during the initial or periodic safety appliance inspection in accordance with paragraph (j) of this section.

(5) Identify the records that will be maintained that are related to the initial and periodic safety appliance inspections in accordance with the requirements contained in paragraph (k) of this section.

(h) *Inspection Personnel.* The initial and periodic safety appliance inspections shall be performed by individuals properly trained and qualified to identify defective weld conditions. At a minimum, these personnel include the following:

(1) A qualified maintenance person (QMP) with at least 4 hours of training specific to the identification of weld defects and the railroad's weld inspection procedures;

(2) A current certified welding inspector (CWI) pursuant to American Welding Society Standard—AWS QC–1,

Standard for AWS Certification of Welding Inspectors (1996) or its current revised equivalent;

(3) A person possessing a current Canadian Welding Bureau (CWB) certification pursuant to the Canadian Standards Association Standard W59 (2003) or its current revised equivalent;

(4) A person possessing a current level II or level III visual inspector certification from the American Society for Non-destructive Testing pursuant to Recommended Practice SNT–TC–1A—Personnel Qualification and Certification in Nondestructive Testing (2001) or its current revised equivalent; or

(5) A person possessing a current certification under any other nationally or internationally recognized welding qualification standard that is equivalent to those identified in paragraphs (h)(2) through (h)(4) of this section.

(i) *Inspection Procedures*. The initial and periodic safety appliance inspections shall be conducted in accordance with the procedures and criteria established in the railroad's inspection plan. At a minimum, these procedures and criteria shall include:

(1) A complete visual inspection of the entire welded surface of any safety appliance bracket or support identified in paragraph (e) of this section.

(2) The visual inspection shall occur after the complete removal of any dirt, grease, rust, or any other foreign matter from the welded portion of the involved safety appliance bracket or support. Removal of paint is not required.

(3) The railroad shall disassemble any equipment necessary to permit full visual inspection of the involved weld.

(4) Any materials necessary to conduct a complete inspection must be made available to the inspection personnel throughout the inspection process. These include but are not limited to such items as mirrors, magnifying glasses, or other location specific inspection aids. Remote viewing aids possessing equivalent sensitivity are permissible for restricted areas.

(5) Any weld found with a defect as defined in paragraph (d) of this section during the initial or periodic safety appliance inspection shall be inspected by either a certified weld inspector identified in paragraphs (h)(2) through (h)(5) of this section or a welding or materials engineer possessing a professional engineer's license for a final determination. No car with a defect in the weld of a safety appliance or its attachment may continue in use until a final determination as to the existence of a defect is made by the personnel identified in this paragraph.

(6) A weld finally determined to contain a defect shall be handled for repair in accordance with § 238.17(e) and repaired in accordance with the remedial action criteria contained in paragraph (j) of this section.

(j) *Remedial Action*. Unless a defect in a weld is known to have been caused by crash damage, the railroad shall conduct a failure and engineering analysis of any weld identified in paragraph (e) of this section determined to have a break or crack either during the initial or periodic safety appliance inspection or while otherwise in service to determine if the break or crack is the result of crash damage, improper construction, or inadequate design. Based on the results of the analysis, the repair of the involved safety appliance bracket or support shall be handled as follows:

(1) A defect in a weld due to crash damage (*i.e.*, impact of the safety appliance by an outside force during service or an accident) or improper construction (*i.e.*, the weld did not conform to the engineered design) shall be reattached by either mechanically fastening the safety appliance or the safety appliance bracket or support to the equipment or welding the safety appliance bracket or support to the equipment in a manner that is at least as strong as the original design or at least twice the strength of a bolted mechanical attachment, whichever is greater. If welding is used to repair the damaged appliance, bracket, or support the following requirements shall be met:

(i) The repair shall be conducted in accordance with the welding procedures contained in APTA Standard SS–C&S–020–03—Standard for Passenger Rail Vehicle Structural Repair (September 2003); or an alternative procedure approved by FRA pursuant to § 238.21. The Director of the Federal Register approves incorporation by reference of the APTA Standard SS–C&S–

020–03 (September 2003), ''Standard for Passenger Rail Vehicle Structural Repair,'' in this section in accordance with 5 U.S.C. 552(a) and 1 CFR part 51. You may obtain a copy of the incorporated standard from the American Public Transportation Association, 1666 K Street, Washington, DC 20006. You may inspect a copy of the incorporated standard at the Federal Railroad Administration, Docket Clerk, 1120 Vermont Ave., NW., Suite 7000, Washington, DC 20590 or at the National Archives and Records Administration (NARA). For information on the availability of this material at NARA, call 202–741–6030, or go to *http://www.archives.gov/federal_register/code_of_federal_regulations/ibr_locations.html;*

(ii) A qualified individual under paragraph (h) of this section shall inspect the weld to ensure it is free of any cracks or fractures prior to the equipment being placed in-service;

(iii) The welded safety appliance bracket or support shall receive a periodic safety appliance inspection pursuant to the requirements contained in paragraphs (g) through (i) of this section; and

(iv) A record of the welded repair pursuant to the requirements of paragraph (k) of this section shall be maintained by the railroad.

(2) A defect in the weld that is due to inadequate design (*i.e.*, unanticipated stresses or loads during service) shall be handled in accordance with the following:

(i) The railroad must immediately notify FRA's Associate Administrator for Safety in writing of its discovery of a defective weld that is due to inadequate design;

(ii) The involved safety appliance or the safety appliance bracket or support shall be reattached to the equipment by mechanically fastening the safety appliance or the safety appliance bracket or support to the equipment unless such mechanical fastening is impractical due to the design of the equipment;

(iii) The railroad shall develop and comply with a written plan submitted to and approved by FRA's Associate Administrator for Safety detailing a schedule for all passenger equipment in that series of cars with a similar welded safety appliance bracket or support to have the involved safety appliance or the safety appliance bracket or support mechanically fastened to the equipment; and

(iv) If a railroad determines that the design of the equipment makes it impractical to mechanically fasten the safety appliance or the safety appliance bracket or support to the equipment, then the railroad shall submit a request to FRA for special approval of alternative compliance pursuant to § 238.21. Such a request shall explain the necessity for any relief sought and shall contain appropriate data and analysis supporting its determination that any alternative method of attachment provides at least an equivalent level of safety.

(k) *Records.* Railroads shall maintain written or electronic records of the inspection and repair of the welded safety appliance brackets or supports on any equipment identified in paragraph (e) of this section. The records shall be made available to FRA upon request. At a minimum, these records shall include all of the following:

(1) Training or certification records for any person performing any of the inspections or repairs required in this section.

(2) The date, time, location, and identification of the person performing the initial and periodic safety appliance inspections for each piece of equipment identified in paragraph (e) of this section. This includes the identification of the person making any final determination as to the existence of a defect under paragraph (i)(5) of this section.

(3) A record of all passenger equipment found with a safety appliance weldment that is defective either during the initial or periodic safety appliance inspection or while the equipment is in-service. This record shall also identify the cause of the crack or fracture.

(4) The date, time, location, identification of the person making the repair, and the nature of the repair to any welded safety appliance bracket or support identified in paragraph (e) of this section.

[71 FR 61858, Oct. 19, 2006]

§ 238.230 Safety appliances—new equipment.

(a) *Applicability*. This section applies to passenger equipment placed in service on or after January 1, 2007.

(b) *Welded Safety Appliances*. Except as provided in this section, all passenger equipment placed into service on or after January 1, 2007, that is equipped with a safety appliance, required by the ''manner of application'' provisions in part 231 of this chapter to be attached by a mechanical fastener (*i.e.*, bolts, rivets, or screws), shall have the safety appliance and any bracket or support necessary to attach the safety appliance to the piece of equipment mechanically fastened to the piece of equipment.

(1) *Safety appliance brackets or supports considered part of the car body*. Safety appliance brackets or supports will be considered part of the car body and will not be required to be mechanically fastened to the piece of passenger equipment if all of the following are met:

(i) The bracket or support is welded to a surface of the equipment's body that is at a minimum 3/16-inch sheet steel or structurally reinforced to provide the equivalent strength and rigidity of 3/16-inch sheet steel;

(ii) The area of the weld is sufficient to ensure a minimum weld strength, based on yield, of three times the strength of the number of SAE grade 2, ½ inch diameter bolts that would be required for each attachment;

(iii) Except for any access required for attachment of the safety appliance, the weld is continuous around the perimeter of the surface of the bracket or support;

(iv) The attachment is made with fillet welds at least 3/16-inch in size;

(v) The weld is designed for infinite fatigue life in the application that it will be placed;

(vi) The weld is performed in accordance with the welding process and the quality control procedures contained in the current American Welding Society (AWS) Standard, the Canadian Welding Bureau (CWB) Standard, or an equivalent nationally or internationally recognized welding standard;

(vii) The weld is performed by an individual possessing the qualifications to be certified under the current AWS Standard, CWB Standard, or any equivalent nationally or internationally recognized welding qualification standard;

(viii) The weld is inspected by an individual qualified to determine that all of the conditions identified in paragraph (b)(1)(i) through (b)(1)(vii) of this section are met prior to the equipment being placed in service; and

(ix) A written or electronic record of the inspection required in paragraph (b)(1)(viii) of this section shall be retained by the railroad operating the equipment and shall be provided to FRA upon request. At a minimum, this record shall include the date, time, location, identification of the person performing the inspection, and the qualifications of the person performing the inspection.

(2) *Directly welded safety appliances*. Passenger equipment that is equipped with a safety appliance that is directly attached to the equipment by welding (*i.e.*, no mechanical fastening of any kind) may be placed in service only if the railroad meets the following:

(i) The railroad submits a written list to FRA that identifies each piece of new passenger equipment equipped with a welded safety appliance as described in paragraph (b)(2) of this section and provides a description of the specific safety appliance;

(ii) The railroad provides a detailed basis as to why the design of the vehicle or placement of the safety appliance requires that the safety appliance be directly welded to the equipment; and

(iii) The involved safety appliance(s) on such equipment are inspected and handled pursuant to the requirements contained in § 238.229(g) through (k).

(3) *Other welded safety appliances and safety appliance brackets and supports*. Except for safety appliance brackets and supports identified in paragraph (b)(1) of this section, safety appliance brackets and supports on passenger equipment shall not be welded to the car body unless the design of the equipment makes it impractical to mechanically fasten the safety appliance and it is impossible to meet the conditions for considering the bracket or support part of the car body contained in paragraph (b)(1) of this section. Prior to

placing a piece of passenger equipment in service with a welded safety appliance bracket or support as described in this paragraph, the railroad shall submit documentation to FRA, for FRA's review and approval, containing all of the following information:

(i) Identification of the equipment by number, type, series, operating railroad, and other pertinent data;

(ii) Identification of the safety appliance bracket(s) or support(s) not mechanically fastened to the equipment and not considered part of the car body under paragraph (b)(1) of this section;

(iii) A detailed analysis describing the necessity to attach the safety appliance bracket or support to the equipment by a means other than mechanical fastening;

(iv) A detailed analysis describing the inability to make the bracket or support part of the car body as provided for in paragraph (b)(1) of this section; and

(v) A copy and description of the consensus or other appropriate industry standard used to ensure the effectiveness and strength of the attachment;

(c) *Inspection and repair*. Passenger equipment with a welded safety appliance or a welded safety appliance bracket or support will be considered defective and shall be handled in accordance with § 238.17(e) if any part or portion of the weld is defective as defined in § 238.229(d). When appropriate, civil penalties for improperly using or hauling a piece of equipment with a defective welded safety appliance or safety appliance bracket or support addressed in this section will be assessed pursuant to the penalty schedule contained in Appendix A to part 231 of this chapter under the appropriate defect code contained therein.

(1) Any safety appliance bracket or support approved by FRA pursuant to paragraph (b)(3) of this section shall be inspected and handled in accordance with the requirements contained in § 238.229(g) through (k).

(2) Any repair to a safety appliance bracket or support considered to be part of the car body under paragraph (b)(1) of this section shall be conducted in accordance with APTA Standard SS–C&S–020–03—Standard for Passenger Rail Vehicle Structural Repair (September 2003), or an alternative procedure approved by FRA pursuant to § 238.21, and shall ensure that the repair meets the requirements contained in paragraphs (b)(1)(i) through (b)(1)(vii) of this section. The Director of the Federal Register approves incorporation by reference of the APTA Standard SS–C&S–020–03 (September 2003), ''Standard for Passenger Rail Vehicle Structural Repair,'' in this section in accordance with 5 U.S.C. 552(a) and 1 CFR part 51. You may obtain a copy of the incorporated standard from the American Public Transportation Association, 1666 K Street, Washington, DC 20006. You may inspect a copy of the incorporated standard at the Federal Railroad Administration, Docket Clerk, 1120 Vermont Ave., NW., Suite 7000, Washington, DC 20590 or at the National Archives and Records Administration (NARA). For information on the availability of this material at NARA, call 202–741–6030, or go to *http://www.archives.gov/federal_register/code_of_federal_regulations/ibr_locations.html*.

(d) *Passenger Cars of Special Construction*. A railroad or a railroad's recognized representative may submit a request for special approval of alternative compliance pursuant to § 238.21 relating to the safety appliance arrangements on any passenger car considered a car of special construction under § 231.18 of this chapter. Any such petition shall be in the form of an industry-wide standard and at a minimum shall:

(1) Identify the type(s) of car to which the standard would be applicable;

(2) As nearly as possible, based upon the design of the equipment, ensure that the standard provides for the same complement of handholds, sill steps, ladders, hand or parking brakes, running boards, and other safety appliances as are required for a piece of equipment of the nearest approximate type already identified in part 231 of this chapter;

(3) Comply with all statutory requirements relating to safety appliances contained at 49 U.S.C. 20301 and 20302;

(4) Specifically address the number, dimension, location, and manner of application of each safety appliance contained in the standard;

(5) Provide specific analysis regarding why and how the standard was developed and specifically discuss the need or benefit of the safety appliance arrangement contained in the standard;

(6) Include drawings, sketches, or other visual aids that provide detailed information relating to the design, location, placement, and attachment of the safety appliances; and

(7) Demonstrate the ergonomic suitability of the proposed arrangements in normal use.

(e) Any industry standard approved pursuant to § 238.21 will be enforced against any person who violates any provision of the approved standard or causes the violation of any such provision. Civil penalties will be assessed under part 231 of this chapter by using the applicable defect code contained in Appendix A to part 231 of this chapter.

[71 FR 61860, Oct. 19, 2006]

§ 238.231 Brake system.

Except as otherwise provided in this section, on or after September 9, 1999 the following requirements apply to all passenger equipment and passenger trains.

(a) A passenger train's primary brake system shall be capable of stopping the train with a service application from its maximum authorized operating speed within the signal spacing existing on the track over which the train is operating.

(b) Where practicable, the design of passenger equipment ordered on or after September 8, 2000, or placed in service for the first time on or after September 9, 2002, shall not require an inspector to place himself or herself on, under, or between components of the equipment to observe brake actuation or release. Passenger equipment not designed in this manner shall be equipped and handled in accordance with one of the following:

(1) Equipped with piston travel indicators as defined in § 238.5 or devices of similar design and inspected pursuant to the requirements contained in § 238.313 (j); or

(2) Equipped with brake indicators as defined in § 238.5, designed so that the pressure sensor is placed in a location so that nothing may interfere with the air flow to brake cylinder and inspected pursuant to the requirements contained in § 238.313 (j).

(c) Passenger equipment shall be provided with an emergency brake application feature that produces an irretrievable stop, using a brake rate consistent with prevailing adhesion, passenger safety, and brake system thermal capacity. An emergency brake application shall be available at any time, and shall be initiated by an unintentional parting of the train.

(d) A passenger train brake system shall respond as intended to signals from a train brake control line or lines. Control lines shall be designed so that failure or breakage of a control line will cause the brakes to apply or will result in a default to control lines that meet this requirement.

(e) Introduction of alcohol or other chemicals into the air brake system of passenger equipment is prohibited.

(f) The operating railroad shall require that the design and operation of the brake system results in wheels that are free of condemnable cracks.

(g) Disc brakes shall be designed and operated to produce a surface temperature no greater than the safe operating temperature recommended by the disc manufacturer and verified by testing or previous service.

(h) *Hand brakes and parking brakes.* (1) Except for a locomotive that is ordered before September 8, 2000 or placed in service for the first time before Sepbember 9, 2002, and except for MU locomotives, all locomotives shall be equipped with a hand or parking brake that can:

(i) Be applied or activated by hand;

(ii) Be released by hand; and

(iii) Hold the loaded unit on the maximum grade anticipated by the operating railroad.

(2) Except for a private car and locomotives addressed in paragraph (h)(1) of this section, all other passenger equipment, including MU locomotives, shall be equipped with a hand brake that meets the requirements for hand brakes contained in part 231 of this chapter and that can:

(i) Be applied or activated by hand;

(ii) Be released by hand; and

(iii) Hold the loaded unit on the maximum grade anticipated by the operating railroad.

(3) Except for MU locomotives, on locomotives so equipped, the hand or parking brake as well as its parts and connections shall be inspected, and necessary repairs made, as often as service requires but no less frequently than every 368 days. The date of the last inspection shall be either entered on Form FRA F 6180–49A, suitably stenciled or tagged on the equipment, or maintained electronically provided FRA has access to the record upon request.

(4) A train's air brake shall not be depended upon to hold unattended equipment (including a locomotive, a car, or a train whether or not locomotive is attached). For purposes of this section, ''unattended equipment'' means equipment left standing and unmanned in such a manner that the brake system of the equipment cannot be readily controlled by a qualified person. Unattended equipment shall be secured in accordance with the following requirements:

(i) A sufficient number of hand or parking brakes shall be applied to hold the equipment. Railroads shall develop and implement a process or procedure to verify that the applied hand or parking brakes will sufficiently hold the equipment with the air brakes released;

(ii) Except for equipment connected to a source of compressed air (e.g., locomotive or ground air source), prior to leaving equipment unattended, the brake pipe shall be reduced to zero at a rate that is no less than a service rate reduction;

(iii) At a minimum, the hand or parking brake shall be fully applied on at least one locomotive or vehicle in an unattended locomotive consist or train;

(iv) A railroad shall develop, adopt, and comply with procedures for securing any unattended locomotive required to have a hand or parking brake applied when the locomotive is not equipped with an operative hand or parking brake;

(v) A railroad shall adopt and comply with instructions to address throttle position, status of the reverser lever, position of the generator field switch, status of the independent brakes, position of the isolation switch, and position of the automatic brake valve, or the functional equivalent of these items, on all unattended locomotives. The procedures and instruction shall take into account weather conditions as they relate to throttle position and reverser handle; and

(vi) Any hand or parking brakes applied to hold unattended equipment shall not be released until it is known that the air brake system is properly charged.

(i) Passenger cars shall be equipped with a means to apply the emergency brake that is accessible to passengers and located in the vestibule or passenger compartment. The emergency brake shall be clearly identified and marked.

(j) Locomotives ordered after September 8, 2000, or placed in service for the first time after September 9, 2002, that are equipped with blended brakes shall be designed so that:

(1) The blending of friction and dynamic brake to obtain the correct retarding force is automatic;

(2) Loss of power or failure of the dynamic brake does not result in exceeding the allowable stopping distance;

(3) The friction brake alone is adequate to safely stop the train under all operating conditions; and

(4) Operation of the friction brake alone does not result in thermal damage to wheels or disc rotor surface temperatures exceeding the manufacturer's recommendation.

(k) For new designs of braking systems, the design process shall include computer modeling or dynamometer simulation of train braking that shows compliance with paragraphs (f) and (g) of this section over the range of equipment operating speeds. A new simulation is required prior to implementing a change in operating parameters.

(l) Locomotives ordered on or after September 8, 2000 or placed in service for the first time on or after September 9, 2002, shall be equipped with effective air coolers or dryers that provide air to the main reservoir with a dew point at

least 10 degrees F. below ambient temperature.

(m) When a passenger train is operated in either direct or graduated release—

(1) all the cars in the train consist shall be set up in the same operating mode or

(2) up to two cars may be operated in direct release mode when the rest of the cars in the train are operated in graduated release mode, provided that the cars operated in direct release mode are hauled at the rear of the train consist.

(n) Before adjusting piston travel or working on brake rigging, the cutout cock in the brake pipe branch must be closed and the air reservoirs must be voided of all compressed air. When cutout cocks are provided in brake cylinder pipes, these cutout cocks may be closed, and air reservoirs need not be voided of all compressed air.

(o) All passenger trains to which this part applies shall comply with the requirements covering the use of two-way end-of-train devices contained in part 232 of this chapter.

[64 FR 25660, May 12, 1999, as amended at 65 FR 41307, July 3, 2000; 71 FR 61861, Oct. 19, 2006]

§ 238.233 Interior fittings and surfaces.

(a) Each seat in a passenger car shall—

(1) Be securely fastened to the car body so as to withstand an individually applied acceleration of 4g acting in the lateral direction and 4g acting in the upward vertical direction on the deadweight of the seat or seats, if held in tandem; and

(2) Have an attachment to the car body of an ultimate strength capable of resisting simultaneously:

(i) The longitudinal inertial force of 8g acting on the mass of the seat; and

(ii) The load associated with the impact into the seatback of an unrestrained 95th-percentile adult male initially seated behind the seat, when the floor to which the seat is attached decelerates with a triangular crash pulse having a peak of 8g and a duration of 250 milliseconds.

(b) Overhead storage racks in a passenger car shall provide longitudinal and lateral restraint for stowed articles. Overhead storage racks shall be attached to the car body with sufficient strength to resist loads due to the following individually applied accelerations acting on the mass of the luggage stowed as determined by the railroad:

(1) Longitudinal: 8g;

(2) Vertical: 4g; and

(3) Lateral: 4g.

(c) Other interior fittings within a passenger car shall be attached to the car body with sufficient strength to withstand the following individually applied accelerations acting on the mass of the fitting:

(1) Longitudinal: 8g;

(2) Vertical: 4g; and

(3) Lateral: 4g.

(d) To the extent possible, all interior fittings in a passenger car, except seats, shall be recessed or flush-mounted.

(e) Sharp edges and corners in a locomotive cab and a passenger car shall be either avoided or padded to mitigate the consequences of an impact with such surfaces.

(f) Locomotives required to be constructed in accordance with subpart D of part 229 of this chapter shall have cab seat attachment in compliance with § 229.206 of this chapter, in lieu of the following requirements of this paragraph. Each seat provided for a crewmember regularly assigned to occupy the cab of a locomotive and each floor-mounted seat in the cab shall be secured to the car body with an attachment having an ultimate strength capable of withstanding the loads due to the following individually applied accelerations acting on the combined mass of the seat and a 95th-percentile adult male occupying it:

(1) Longitudinal: 8g;

(2) Lateral: 4g; and

(3) Vertical: 4g.

(g) If, for purposes of showing compliance with the requirements of this section, the strength of a seat attachment is to be demonstrated through sled testing, the seat structure and seat attachment to the sled that is used in such testing must be representative of the actual seat structure in, and seat attachment to, the rail vehicle subject to the requirements of this section. If the attachment strength of any other

interior fitting is to be demonstrated through sled testing, for purposes of showing compliance with the requirements of this section, such testing shall be conducted in a similar manner.

[64 FR 25660, May 12, 1999, as amended at 71 FR 36917, June 28, 2006]

§ 238.235 Doors.

(a) By December 31, 1999, each powered, exterior side door in a vestibule that is partitioned from the passenger compartment of a passenger car shall have a manual override device that is:

(1) Capable of releasing the door to permit it to be opened without power from inside the car;

(2) Located adjacent to the door which it controls; and

(3) Designed and maintained so that a person may readily access and operate the override device from inside the car without requiring the use of a tool or other implement. If the door is dual-leafed, only one of the door leafs is required to respond to the manual override device.

(b) Each passenger car ordered on or after September 8, 2000, or placed in service for the first time on or after September 9, 2002 shall have a minimum of two exterior side doors, each door providing a minimum clear opening with dimensions of 30 inches horizontally by 74 inches vertically.

NOTE: The Americans with Disabilities Act (ADA) Accessibility Specifications for Transportation Vehicles also contain requirements for doorway clearance (See 49 CFR part 38).

Each powered, exterior side door on each such passenger car shall have a manual override device that is:

(1) Capable of releasing the door to permit it to be opened without power from both inside and outside the car;

(2) Located adjacent to the door which it controls; and

(3) Designed and maintained so that a person may access the override device from both inside and outside the car without requiring the use of a tool or other implement.

(c) A railroad may protect a manual override device used to open a powered, exterior door with a cover or a screen capable of removal without requiring the use of a tool or other implement.

(d) Door exits shall be marked, and instructions provided for their use, as required by § 239.107(a) of this chapter.

[64 FR 25660, May 12, 1999, as amended at 67 FR 19991, Apr. 23, 2002]

§ 238.237 Automated monitoring.

(a) Except as further specified in this paragraph, on or after November 8, 1999 a working alerter or deadman control shall be provided in the controlling locomotive of each passenger train operating in other than cab signal, automatic train control, or automatic train stop territory. If the controlling locomotive is ordered on or after September 8, 2000, or placed into service for the first time on or after September 9, 2002, a working alerter shall be provided.

(b) Alerter or deadman control timing shall be set by the operating railroad taking into consideration maximum train speed and capabilities of the signal system. The railroad shall document the basis for setting alerter or deadman control timing and make this documentation available to FRA upon request.

(c) If the train operator does not respond to the alerter or maintain proper contact with the deadman control, it shall initiate a penalty brake application.

(d) The following procedures apply if the alerter or deadman control fails en route and causes the locomotive to be in non-compliance with paragraph (a):

(1)(i) A second person qualified on the signal system and trained to apply the emergency brake shall be stationed in the locomotive cab; or

(ii) The engineer shall be in constant communication with a second crewmember until the train reaches the next terminal.

(2)(i) A tag shall be prominently displayed in the locomotive cab to indicate that the alerter or deadman control is defective, until such device is repaired; and

(ii) When the train reaches its next terminal or the locomotive undergoes its next calender day inspection, whichever occurs first, the alerter or deadman control shall be repaired or

the locomotive shall be removed as the controlling locomotive in the train.

[64 FR 25660, May 12, 1999, as amended at 67 FR 19991, Apr. 23, 2002]

Subpart D—Inspection, Testing, and Maintenance Requirements for Tier I Passenger Equipment

§ 238.301 Scope.

(a) This subpart contains requirements pertaining to the inspection, testing, and maintenance of passenger equipment operating at speeds not exceeding 125 miles per hour. The requirements in this subpart address the inspection, testing, and maintenance of the brake system as well as other mechanical and electrical components covered by this part.

(b) Beginning on January 1, 2002, the requirements contained in this subpart shall apply to railroads operating Tier I passenger equipment covered by this part. A railroad may request earlier application of the requirements contained in this subpart upon written notification to FRA's Associate Administrator for Safety as provided in § 238.1(c).

(c) Paragraphs (b) and (c) of § 238.309 shall apply beginning September 9, 1999.

[64 FR 25660, May 12, 1999, as amended at 65 FR 41307, July 3, 2000]

§ 238.303 Exterior calendar day mechanical inspection of passenger equipment.

(a) *General.* (1) Except as provided in paragraph (f) of this section, each passenger car and each unpowered vehicle used in a passenger train shall receive an exterior mechanical inspection at least once each calendar day that the equipment is placed in service.

(2) Except as provided in paragraph (f) of this section, all passenger equipment shall be inspected as required in this section at least once each calendar day that the equipment is placed in service to ensure that the equipment conforms with the requirement contained in paragraph (e)(15) of this section.

(3) If a passenger care is also classified as a locomotive under part 229 of this chapter, the passenger car shall also receive a daily inspection pursuant to the requirements of § 229.21 of this chapter.

(b) Each passenger car and each unpowered vehicle added to a passenger train shall receive an exterior calendar day mechanical inspection in accordance with the following:

(1) Except as provided in paragraph (b)(2) of this section, each passenger car and each unpowered vehicle added to a passenger train shall receive an exterior calendar day mechanical inspection at the time it is added to the train unless notice is provided to the train crew that an exterior mechanical inspection was performed on the car or vehicle on the last day it was used in passenger service. The notice required by this section shall contain the date, time, and location of the last exterior mechanical inspection;

(2) Each express car, freight car, and each unit of intermodal equipment (*e.g.,* RoadRailers®) added to a passenger train shall receive an exterior calendar day mechanical inspection at the time it is added to the train, unless notice is provided to the train crew that an exterior mechanical inspection was performed on the car within the previous calendar day. The notice required by this section shall contain the date, time, and location of the last exterior mechanical inspection.

(c) The exterior calendar day mechanical inspection shall be performed by a qualified maintenance person.

(d) The exterior calendar day mechanical inspection required by this section shall be conducted to the extent possible without uncoupling the trainset and without placing the equipment over a pit or on an elevated track.

(e) As part of the exterior calendar day mechanical inspection, the railroad shall verify conformity with the following conditions, and nonconformity with any such condition renders the passenger car or unpowered vehicle used in a passenger train defective whenever discovered in service:

(1) Products of combustion are released entirely outside the cab and other compartments.

(2) Each battery container is vented and each battery is kept from gassing excessively.

(3) Each coupler is in the following condition:

(i) Sidewall or pin bearing bosses and the pulling face of the knuckles are not broken or cracked;

(ii) The coupler assembly is equipped with anti-creep protection;

(iii) The coupler carrier is not broken or cracked; and

(iv) The yoke is not broken or cracked.

(4) A device is provided under the lower end of all drawbar pins and articulated connection pins to prevent the pin from falling out of place in case of breakage.

(5) The suspension system, including the spring rigging, is in the following condition:

(i) Protective construction or safety hangers are provided to prevent spring planks, spring seats, or bolsters from dropping to the track structure in event of a hanger or spring failure;

(ii) The top (long) leaf or any of the other three leaves of the elliptical spring is not broken, except when a spring is part of a nest of three or more springs and none of the other springs in the nest has its top leaf or any of the other three leaves broken;

(iii) The outer coil spring or saddle is not broken;

(iv) The equalizers, hangers, bolts, gibs, or pins are not cracked or broken;

(v) The coil spring is not fully compressed when the car is at rest;

(vi) The shock absorber is not broken or leaking oil or other fluid; and

(vii) Each air bag or other pneumatic suspension system component inflates or deflates, as applicable, correctly and otherwise operates as intended.

(6) Each truck is in the following condition:

(i) Each tie bar is not loose;

(ii) Each motor suspension lug, equalizer, hanger, gib, or pin is not cracked or broken; and

(iii) The truck frame is not broken and is not cracked in a stress area that may affect its structural integrity.

(7) Each side bearing is in the following condition:

(i) Each friction side bearing with springs designed to carry weight does not have more than 25 percent of the springs in any one nest broken;

(ii) Each friction side bearing does not run in contact unless designed to operate in that manner; and

(iii) The maximum clearance of each side bearing does not exceed the manufacturer's recommendation.

(8) Each wheel does not have any of the following conditions:

(i) A single flat spot that is 2½ inches or more in length, or two adjoining spots that are each two or more inches in length;

(ii) A gouge or chip in the flange that is more than 1½ inches in length and ½ inch in width;

(iii) A broken rim, if the tread, measured from the flange at a point ⅝ of an inch above the tread, is less than 3¾ inches in width;

(iv) A shelled-out spot 2½ inches or more in length, or two adjoining spots that are each two or more inches in length;

(v) A seam running lengthwise that is within 3¾ inches of the flange;

(vi) A flange worn to a ⅞ inch thickness or less, gauged at a point ⅜ of an inch above the tread;

(vii) A tread worn hollow 5⁄16 of an inch or more;

(viii) A flange height of 1½ inches or more measured from the tread to the top of the flange;

(ix) A rim less than 1 inch thick;

(x) Except as provided in paragraph (e)(8)(iii) of this section, a crack or break in the flange, tread, rim, plate, or hub;

(xi) A loose wheel; or

(xii) A weld.

(9) No part or appliance of a passenger coach, except the wheels, is less than 2½ inches above the top of the rail.

(10) Each unguarded, noncurrent-carrying metal part subject to becoming charged is grounded or thoroughly insulated.

(11) Each jumper and cable connection is in the following condition:

(i) Each jumpers and cable connection between coaches, between locomotives, or between a locomotive and a coach is located and guarded in a manner that provides sufficient vertical clearance. Jumpers and cable connections may not hang with one end free;

(ii) The insulation is not broken or badly chafed;

(iii) No plug, receptacle, or terminal is broken; and

(iv) No strand of wire is broken or protruding.

(12) Each door and cover plate guarding high voltage equipment is marked ''Danger—High Voltage'' or with the word ''Danger'' and the normal voltage carried by the parts so protected.

(13) Each buffer plate is in place.

(14) Each diaphragm, if any, is in place and properly aligned.

(15) Each secondary braking system is in operating mode and does not have any known defective condition which prevents its proper operation. If the dynamic brakes on a locomotive are found not to be in operating mode or are known to have a defective condition which prevents their proper operation at the time that the exterior mechanical inspection is performed or at any other time while the locomotive is in service, the following requirements shall be met in order to continue the locomotive in service:

(i) MU locomotives equipped with dynamic brakes found not to be in operating mode or containing a defective condition which prevents the proper operation of the dynamic brakes shall be handled in accordance with the following requirements:

(A) A tag bearing the words ''inoperative dynamic brakes'' shall be securely displayed in a conspicuous location in the cab of the locomotive and contain the locomotive number, the date and location where the condition was discovered, and the signature of the individual who discovered the condition;

(B) The locomotive engineer shall be informed in writing that the dynamic brakes on the locomotive are inoperative at the location where the locomotive engineer first takes charge of the train; and

(C) The inoperative or defective dynamic brakes shall be repaired or removed from service by or at the locomotive's next exterior calendar day mechanical inspection.

(ii) Conventional locomotives equipped with dynamic brakes found not to be in operating mode or containing a defective condition which prevents the proper operation of the dynamic brakes shall be handled in accordance with the following:

(A) A tag bearing the words ''inoperative dynamic brakes'' shall be securely displayed in a conspicuous location in the cab of the locomotive and contain the locomotive number, the date and location where the condition was discovered, and the signature of the person discovering the condition;

(B) The locomotive engineer shall be informed in writing that the dynamic brakes on the locomotive are inoperative at the location where the locomotive engineer first takes charge of the train; and

(C) The inoperative or defective dynamic brakes shall be repaired within 3 calendar days of being found in defective condition or at the locomotive's next periodic inspection pursuant to § 229.23 of this chapter, whichever occurs first.

(16) All roller bearings do not have any of the following conditions:

(i) A sign of having been overheated as evidenced by discoloration or other telltale sign of overheating, such as damage to the seal or distortion of any bearing component;

(ii) A loose or missing cap screw;

(iii) A broken, missing, or improperly applied cap screw lock; or

(iv) A seal that is loose or damaged or permits leakage of lubricant in clearly formed droplets.

(17) Each air compressor, on passenger equipment so equipped, shall be in effective and operative condition. MU passenger equipment found with an inoperative or ineffective air compressor at the time of its exterior calendar day mechanical inspection may remain in passenger service until the equipment's next exterior calendar day mechanical inspection where it must be repaired or removed from passenger service; provided, all of the following requirements are met:

(i) The equipment has an inherent redundancy of air compressors, due to either the make-up of the train consist or the design of the equipment;

(ii) The railroad demonstrates through verifiable data, analysis, or actual testing that the safety and integrity of a train is not compromised in

any manner by the inoperative or ineffective air compressor. The data, analysis, or test shall establish the maximum number of air compressors that may be inoperative based on size of the train consist, the type of passenger equipment in the train, and the number of service and emergency brake applications typically expected in the run profile for the involved train;

(iii) The involved train does not exceed the maximum number of inoperative or ineffective air compressors established in accordance with paragraph (e)(17)(ii) of this section;

(iv) A qualified maintenance person determines and verifies that the inoperative or ineffective air compressor does not compromise the safety or integrity of the train and that it is safe to move the equipment in passenger service;

(v) The train crew is informed in writing of the number of units in the train consist with inoperative or ineffective air compressors at the location where the train crew first takes charge of the train;

(vi) A record is maintained of the inoperative or ineffective air compressor pursuant to the requirements contained in § 238.17(c)(4); and

(vii) Prior to operating equipment under the provisions contained in this paragraph, the railroad shall provide in writing to FRA's Associate Administrator for Safety the maximum number of inoperative or ineffective air compressors identified in accordance with paragraph (e)(17)(ii) of this section.

(viii) The data, analysis, or testing developed and conducted under paragraph (e)(17)(ii) of this section shall be made available to FRA upon request. FRA's Associate Administrator for Safety may revoke a railroad's ability to utilize the flexibility provided in this paragraph if the railroad fails to comply with the maximum limits established under paragraph (e)(17)(ii) or if such maximum limits are not supported by credible data or do not provide adequate safety assurances.

(18) All rescue-access-related exterior markings, signage, and instructions required by § 238.114 and § 239.107(a) of this chapter shall be in place and, as applicable, conspicuous or legible, or both.

(i) Except as provided in paragraphs (e)(18)(ii) and (iii) of this section, passenger equipment that has any required rescue-access-related exterior marking, signage, or instruction that is missing, illegible, or inconspicuous may remain in passenger service until no later than the equipment's fourth exterior calendar day mechanical inspection or next periodic mechanical inspection required under § 238.307, whichever occurs first, after the noncomplying condition is discovered, where the car shall be repaired or removed from service.

(ii) A passenger car having more than 50 percent of the windows on a side of a level of the car designated and properly marked for rescue access that has any required rescue-access-related exterior marking, signage, or instruction that is missing, illegible, or inconspicuous on any of the other windows on that side and level of the car may remain in passenger service until no later than the car's next periodic mechanical inspection required under § 238.307, where the car shall be repaired or removed from service.

(iii) A passenger car that is a sleeping car that has more than two consecutive windows with any required rescue access-related exterior marking, signage, or instruction at or near their locations that is missing, illegible, or inconspicuous may remain in passenger service until no later than the car's next periodic mechanical inspection required under § 238.307, where the car shall be repaired or removed from service.

(iv) A record shall be maintained of any noncomplying marking, signage, or instruction described in paragraphs (e)(18)(i) through (iii) of this section that contains the date and time that the defective condition was first discovered. This record shall be retained until all necessary repairs are completed.

(f) *Exception.* A long-distance intercity passenger train that misses a scheduled exterior calendar day mechanical inspection due to a delay en route may continue in service to the location where the inspection was scheduled to be performed. At that point, an exterior calendar day mechanical inspection shall be performed

prior to returning the equipment to service. This flexibility applies only to the exterior mechanical safety inspections required by this section, and does not relieve the railroad of the responsibility to perform a calendar day inspection on a unit classified as a ''locomotive'' under part 229 of this chapter as required by § 229.21 of this chapter.

(g) *Records.* A record shall be maintained of each exterior calendar day mechanical inspection performed.

(1) This record may be maintained in writing or electronically provided FRA has access to the record upon request.

(2) The written or electronic record must contain the following information:

(i) The identification number of the unit;

(ii) The place, date, and time of the inspection;

(iii) Any non-complying conditions found; and

(iv) The signature or electronic identification of the inspector.

(3) This record may be part of a single master report covering an entire group of cars and equipment.

(4) This record shall be maintained at the place where the inspection is conducted or at one central location and shall be retained for at least 92 days.

(h) Cars requiring a single car test in accordance with § 238.311 that are being moved in service to a location where the single car test can be performed shall have the single car test completed prior to, or as a part of, the exterior calendar day mechanical inspection.

[64 FR 25660, May 12, 1999, as amended at 65 FR 41307, July 3, 2000; 71 FR 61862, Oct. 19, 2006; 73 FR 6412, Feb. 1, 2008]

§ 238.305 Interior calendar day mechanical inspection of passenger cars.

(a) Except as provided in paragraph (d) of this section, each passenger car shall receive an interior mechanical inspection at least once each calendar day that it is placed in service.

(b) The interior calendar day mechanical inspection shall be performed by a qualified person or a qualified maintenance person.

(c) As part of the interior calendar day mechanical inspection, the railroad shall verify conformity with the following conditions, and nonconformity with any such condition renders the car defective whenever discovered in service, except as provided in paragraphs (c)(8) through (c)(12) and paragraph (d) of this section.

(1) All fan openings, exposed gears and pinions, exposed moving parts of mechanisms, pipes carrying hot gases and high-voltage equipment, switches, circuit breakers, contactors, relays, grid resistors, and fuses are installed in non-hazardous locations or equipped with guards to prevent personal injury.

(2) Floors of passageways and compartments are free from oil, water, waste, or any obstruction that creates a slipping, tripping, or fire hazard, and floors are properly treated to provide secure footing.

(3) All D rings, pull handles, or other means to access manual door releases are in place based on a visual inspection.

(4) All emergency equipment, including a fire extinguisher, pry bar, auxiliary portable lighting, and first aid kits, as applicable, are in place.

(5) The words ''Emergency Brake Valve'' are legibly stenciled or marked near each brake pipe valve or shown on an adjacent badge plate.

(6) All doors and cover plates guarding high voltage equipment are marked ''Danger—High Voltage'' or with the word ''Danger'' and the normal voltage carried by the parts so protected.

(7) All safety-related signage is in place and legible.

(8) All trap doors safely operate and securely latch in place in both the up and down position. A non-complying car may continue in passenger service pursuant to paragraph (d) of this section, if the trap door can be secured by locking out the door for which it is used.

(9) All vestibule steps are illuminated. A non-complying car may continue in passenger service pursuant to paragraph (d) of this section, if the car will be used solely in high-platform service.

(10) All end doors and side doors operate safely and as intended. A noncomplying car may continue in passenger

service pursuant to paragraph (d) of this section—

(i) If at least one operative and accessible door is available on each side of the car;

(ii) The train crew is provided written notification of the noncomplying condition; and

(iii) A notice is prominently displayed directly on the defective door indicating that the door is defective.

(11) [Reserved]

(12) On passenger cars so equipped, public address and intercom systems shall be operative and function as intended. A passenger car with an inoperative or nonfunctioning public address or intercom system may remain in passenger service until no later than the car's fourth interior calendar day mechanical inspection or next periodic mechanical inspection required under § 238.307, whichever occurs first, or for a passenger car used in long-distance intercity train service until the eighth interior calendar day mechanical inspection or next periodic mechanical inspection required under § 238.307, whichever occurs first, after the noncomplying condition is discovered, where it shall be repaired or removed from service; provided, the train crew is given written notification of the noncomplying condition, and all of the requirements contained in paragraph (d)(3) of this section are met.

(d) Any passenger car found not to be in compliance with the requirements contained in paragraphs (c)(5) through (c)(10) of this section at the time of its interior calendar day mechanical inspection may remain in passenger service until the car's next interior calendar day mechanical inspection where it must be repaired or removed from passenger service; provided, all of the specific conditions contained in paragraphs (c)(8) through (c)(10) of this section are met and all of the following requirements are met:

(1) A qualified person or a qualified maintenance person determines that the repairs necessary to bring the car into compliance cannot be performed at the time that the current day's interior mechanical inspection is conducted;

(2) A qualified person or a qualified maintenance person determines that it is safe to move the equipment in passenger service; and

(3) A record is maintained of the noncomplying condition with the date and time that the condition was first discovered.

(e) A long-distance intercity passenger train that misses a scheduled calendar day interior mechanical inspection due to a delay en route may continue in service to the location where the inspection was scheduled to be performed. At that point, an interior calendar day mechanical inspection shall be performed prior to returning the equipment to service.

(f) *Records*. A record shall be maintained of each interior calendar day mechanical inspection performed.

(1) This record may be maintained in writing or electronically provided FRA has access to the record upon request.

(2) The written or electronic record must contain the following information:

(i) The identification number of the unit;

(ii) The place, date, and time of the inspection;

(iii) Any non-complying conditions found; and

(iv) The signature or electronic identification of the inspector.

(3) This record may be part of a single master report covering an entire group of cars and equipment.

(4) This record shall be maintained at the place where the inspection is conducted or at one central location and shall be retained for at least 92 days.

[64 FR 25660, May 12, 1999, as amended at 65 FR 41308, July 3, 2000; 73 FR 6412, Feb. 1, 2008]

§ 238.307 Periodic mechanical inspection of passenger cars and unpowered vehicles used in passenger trains.

(a) *General*. (1) Railroads shall conduct periodic mechanical inspections of all passenger cars and all unpowered vehicles used in a passenger train as required by this section or as warranted and justified by data developed pursuant to paragraph (a)(2) of this section. A periodic inspection conducted under part 229 of this chapter satisfies the requirement of this section with respect to the features inspected.

(2) A railroad may, upon written notification to FRA's Associate Administrator for Safety, adopt and comply with alternative periodic mechanical inspection intervals for specific components or equipment in lieu of the requirements of this section. Any alternative interval must be based upon a documented reliability assessment conducted under a system safety plan subject to periodic peer audit. (See Appendix E to this part for a discussion of the general principles of reliability-based maintenance programs.) The periodic inspection intervals provided in this section may be changed only when justified by accumulated, verifiable data that provides a high level of confidence that the component(s) will not fail in a manner resulting in harm to persons. FRA may monitor and review a railroad's implementation and compliance with any alternative interval adopted. FRA's Associate Administrator for Safety may prohibit or revoke a railroad's ability to utilize an alternative inspection interval if FRA determines that the adopted interval is not supported by credible data or does not provide adequate safety assurances. Such a determination will be made in writing and will state the basis for such action.

(b) Each periodic mechanical inspection required by this section shall be performed by a qualified maintenance person.

(c) The periodic mechanical inspection shall specifically include the following interior and exterior mechanical components, which shall be inspected not less frequently than every 184 days. At a minimum, this inspection shall determine that:

(1) Seats and seat attachments are not broken or loose. If a car is found with a seat that is not in compliance with this requirement while being used between periodic mechanical inspections, the equipment may continue to be used in passenger service until the performance of an interior calendar day mechanical inspection pursuant to § 238.305 on the day following the discovery of the defective condition provided the seat is rendered unuseable, a notice is prominently displayed on the seat, and a record is maintained with the date and time that the non-complying condition was discovered.

(2) Luggage racks are not broken or loose.

(3) All beds and bunks are not broken or loose, and all restraints or safety latches and straps are in place and function as intended.

(4) A representative sample of emergency window exits on the railroad's passenger cars properly operate, in accordance with the requirements of § 239.107 of this chapter.

(5) With regard to the following emergency systems:

(i) Emergency lighting systems required under § 238.115 are in place and operational; and

(ii) [Reserved]

(6) With regard to switches:

(i) All hand-operated switches carrying currents with a potential of more than 150 volts that may be operated while under load are covered and are operative from the outside of the cover;

(ii) A means is provided to display whether the switches are open or closed; and

(iii) Switches not designed to be operated safely while under load are legibly marked with the voltage carried and the words ''must not be operated under load''.

(7) Each coupler is in the following condition:

(i) The distance between the guard arm and the knuckle nose is not more than 5⅛ inches on standard type couplers (MCB contour 1904), or not more than 5⁵⁄₁₆ inches on D&E couplers;

(ii) The free slack in the coupler or drawbar not absorbed by friction devices or draft gears is not more than ½ inch; and

(iii) The draft gear is not broken, to the extent possible without dropping cover plates.

(8) All trucks are equipped with a device or securing arrangement to prevent the truck and car body from separating in case of derailment.

(9) All center castings on trucks are not cracked or broken, to the extent possible without jacking the car and rolling out the trucks. However, an extensive inspection of all center castings shall be conducted by jacking the equipment and rolling out the trucks

at each COT&S cycle provided in § 238.309 for the equipment.

(10) All mechanical systems and components of the equipment are free of all the following general conditions that endanger the safety of the crew, passengers, or equipment:

(i) A continuous accumulation of oil or grease;

(ii) Improper functioning of a component;

(iii) A crack, break, excessive wear, structural defect, or weakness of a component;

(iv) A leak;

(v) Use of a component or system under a condition that exceeds that for which the component or system is designed to operate; and

(vi) Insecure attachment of a component.

(11) All of the items identified in the exterior calendar day mechanical inspection contained at § 238.303 are in conformity with the conditions prescribed in that section.

(12) All of the items identified in the interior calendar day mechanical inspection contained at § 238.305 are in conformity with the conditions prescribed in that section.

(13) The hand or parking brake shall be applied and released to determine that it functions as intended.

(d) At an interval not to exceed 368 days, the periodic mechanical inspection shall specifically include inspection of the following:

(1) Manual door releases, to determine that all manual door releases operate as intended;

(2) The hand or parking brake as well as its parts and connections, to determine that they are in proper condition and operate as intended. The date of the last inspection shall be either entered on Form FRA F 6180–49A, suitably stenciled or tagged on the equipment, or maintained electronically provided FRA has access to the record upon request; and

(3) Emergency roof access markings and instructions required under § 238.123(e), to determine that they are in place and, as applicable, conspicuous or legible, or both.

(e) *Records.* (1) A record shall be maintained of each periodic mechanical inspection required to be performed by this section. This record may be maintained in writing or electronically, provided FRA has access to the record upon request. The record shall be maintained either in the railroad's files, the cab of the locomotive, or a designated location in the passenger car. The record shall be retained until the next periodic mechanical inspection of the same type is performed and shall contain the following information:

(i) The date of the inspection;

(ii) The location where the inspection was performed;

(iii) The signature or electronic identification of the inspector; and

(iv) The signature or electronic identification of the inspector's supervisor.

(2) Detailed documentation of any reliability assessments depended upon for implementing an alternative inspection interval under paragraph (a)(2) of this section, including underlying data, shall be retained during the period that the alternative inspection interval is in effect. Data documenting inspections, tests, component replacement and renewals, and failures shall be retained for not less than three (3) inspection intervals.

(f) Nonconformity with any of the conditions set forth in this section renders the car or vehicle defective whenever discovered in service.

[64 FR 25660, May 12, 1999, as amended at 65 FR 41308, July 3, 2000; 71 FR 61862, Oct. 19, 2006; 73 FR 6412, Feb. 1, 2008]

§ 238.309 Periodic brake equipment maintenance.

(a) *General.* (1) This section contains the minimum intervals at which the brake equipment on various types of passenger equipment shall be periodically cleaned, repaired, and tested. This maintenance procedure requires that all of the equipment's brake system pneumatic components that contain moving parts and are sealed against air leaks be removed from the equipment, disassembled, cleaned, and lubricated and that the parts that can deteriorate with age be replaced.

(2) A railroad may petition FRA's Associate Administrator for Safety to approve alternative maintenance procedures providing equivalent safety, in lieu of the requirements of this section.

The petition shall be filed as provided in § 238.21.

(b) *MU locomotives*. The brake equipment of each MU locomotive shall be cleaned, repaired, and tested at intervals in accordance with the following schedule:

(1) Every 736 days if the MU locomotive is part of a fleet that is not 100 percent equipped with air dryers;

(2) Every 1,104 days if the MU locomotive is part of a fleet that is 100 percent equipped with air dryers and is equipped with PS–68, 26–C, 26–L, PS–90, CS–1, RT–2, RT–5A, GRB–1, CS–2, or 26–R brake systems. (This listing of brake system types is intended to subsume all brake systems using 26 type, ABD, or ABDW control valves and PS68, PS–90, 26B–1, 26C, 26CE, 26–B1, 30CDW, or 30ECDW engineer's brake valves.); and

(3) Every 736 days for all other MU locomotives.

(c) *Conventional locomotives*. The brake equipment of each conventional locomotive shall be cleaned, repaired, and tested at intervals in accordance with the following schedule:

(1) Every 1,104 days for a locomotive equipped with a 26–L or equivalent brake system; and

(2) Every 736 days for a locomotive equipped with other than a 26–L or equivalent brake system.

(d) *Passenger coaches and other unpowered vehicles*. The brake equipment on each passenger coach and each unpowered vehicle used in a passenger train shall be cleaned, repaired, and tested at intervals in accordance with following schedule:

(1) Every 2,208 days for a coach or vehicle equipped with an AB-type brake system.

(2) Every 1,476 days for a coach or vehicle equipped with a 26–C or equivalent brake system; and

(3) Every 1,104 days for a coach or vehicle equipped with other than an AB, ABD, ABDX, 26–C, or equivalent brake system.

(e) *Cab cars*. The brake equipment of each cab car shall be cleaned, repaired, and tested at intervals in accordance with the following schedule:

(1) Every 1,476 days for that portion of the cab car brake system using brake valves that are identical to the passenger coach 26–C brake system;

(2) Every 1,104 days for that portion of the cab car brake system using brake valves that are identical to the locomotive 26–L brake system; and

(3) Every 736 days for all other types of cab car brake valves.

(f) *Records of periodic maintenance*. (1) The date and place of the cleaning, repairing, and testing required by this section shall be recorded on Form FRA 6180–49A or a similar form developed by the railroad containing the same information, and the person performing the work and that person's supervisor shall sign the form, if possible. Alternatively, the railroad may stencil the vehicle with the date and place of the cleaning, repairing, and testing and maintain an electronic record of the person performing the work and that person's supervisor.

(2) A record of the parts of the air brake system that are cleaned, repaired, and tested shall be kept in the railroad's files, the cab of the locomotive, or a designated location in the passenger car until the next such periodic test is performed.

[64 FR 25660, May 12, 1999, as amended at 65 FR 41309, July 3, 2000]

§ 238.311 Single car test.

(a) Except for self-propelled passenger cars, single car tests of all passenger cars and all unpowered vehicles used in passenger trains shall be performed in accordance with either APTA Standard SS-M-005-98, ''Code of Tests for Passenger Car Equipment Using Single Car Testing Device,'' published March, 1998; or an alternative procedure approved by FRA pursuant to § 238.21. The incorporation by reference of this APTA standard was approved by the Director of the Federal Register in accordance with 5 U.S.C. 552(a) and 1 CFR part 51. You may obtain a copy of the incorporated document from the American Public Transit Association, 1201 New York Avenue, NW., Washington, DC 20005. You may inspect a copy of the document at the Federal Railroad Administration, Docket Clerk, 1120 Vermont Avenue, NW., Suite 7000, Washington, DC or at the National Archives and Records Administration (NARA). For information on the availability of this material at NARA, call 202–741–6030, or go to: *http://*

www.archives.gov/federal_register/code_of_federal_regulations/ibr_locations.html.

(b) Each single car test required by this section shall be performed by a qualified maintenance person.

(c) A railroad shall perform a single car test of the brake system of a car or vehicle described in paragraph (a) of this section if the car or vehicle is found with one or more of the following wheel defects:

(1) Built-up tread;

(2) Slid flat wheel;

(3) Thermal crack;

(4) Overheated wheel; or

(5) Shelling.

(d) A railroad need not perform the single car test required in paragraph (c) of this section, if the railroad can establish that the wheel defect is other than built-up tread and is due to a cause other than a defective brake system on the car.

(e) Except as provided in paragraph (f) of this section, a railroad shall perform a single car test of the brake system of a car or vehicle described in paragraph (a) of this section when:

(1) Except for private cars, a car or vehicle is placed in service after having been out of service for 30 days or more; or

(2) One or more of the following conventional air brake equipment items is removed, repaired, or replaced:

(i) Relay valve;

(ii) Service portion;

(iii) Emergency portion; or

(iv) Pipe bracket.

(f) *Exception.* If the single car test cannot be made at the point where repairs are made, the car may be moved in passenger service to the next forward location where the test can be made. A railroad may move a car in this fashion only after visually verifying an application and release of the brakes on both sides of the car that was repaired, and provided that the car is appropriately tagged to indicate the need to perform a single car test. The single car test shall be completed prior to, or as a part of, the car's next calendar day mechanical inspection.

(g) If one or more of the following conventional air brake equipment items is removed, repaired, or replaced only that portion which is renewed or replaced must be tested to satisfy the provisions of this section:

(1) Brake reservoir;

(2) Brake cylinder;

(3) Piston assembly;

(4) Vent valve;

(5) Quick service valve;

(6) Brake cylinder release valve;

(7) Modulating valve or slack adjuster; or

(8) Angle cock or cutout cock.

[64 FR 25660, May 12, 1999, as amended at 65 FR 41309, July 3, 2000]

§ 238.313 Class I brake test.

(a) Each commuter and short-distance intercity passenger train shall receive a Class I brake test once each calendar day that the train is placed or continues in passenger service.

(b) Except as provided in paragraph (i) of this section, each long-distance intercity passenger train shall receive a Class I brake test:

(1) Prior to the train's departure from an originating terminal; and

(2) Every 1,500 miles or once each additional calendar day, whichever occurs first, that the train remains in continuous passenger service.

(c) Each passenger car and each unpowered vehicle added to a passenger train shall receive a Class I or Class IA brake test at the time it is added to the train unless notice is provided to the train crew that a Class I brake test was performed on the car within the previous calendar day and the car has not been disconnected from a source of compressed air for more than four hours prior to being added to the train. The notice required by this section shall contain the date, time, and location of the last Class I brake test.

(d) Each Class I brake test shall be performed by a qualified maintenance person.

(e) Each Class I brake test may be performed either separately or in conjunction with the exterior calendar day mechanical inspection required under § 238.303.

(f) Except as provided in § 238.15(b), a railroad shall not use or haul a passenger train in passenger service from a location where a Class I brake test has been performed, or was required by this part to have been performed, with less than 100 percent operative brakes.

(g) A Class I brake test shall be performed at the air pressure at which the train's air brakes will be operated, but not less than 90 psi, and shall be made to determine and ensure that:

(1) The friction brakes apply and remain applied on each car in the train until a release of the brakes has been initiated on each car in response to train line electric, pneumatic, or other signals. This test shall include a verification that each side of each car's brake system responds properly to application and release signals;

(2) The brake shoes or pads are firmly seated against the wheel or disc with the brakes applied;

(3) Piston travel is within prescribed limits, either by direct observation, observation of a piston travel indicator, or in the case of tread or disc brakes by determining that the brake shoe or pad provides pressure to the wheel. For vehicles equipped with 8½-inch or 10-inch diameter brake cylinders, piston travel shall be within 7 to 9 inches. If piston travel is found to be less than 7 inches or more than 9 inches, it must be adjusted to nominally 7½ inches. Proper release of the brakes can be determined by observation of the clearance between the brake shoe and the wheel or between the brake pad and the brake disc.

(4) The communicating signal system is tested and known to be operating as intended; a tested and operating two-way radio system meets this requirement;

(5) Each brake shoe or pad is securely fastened and correctly aligned in relation to the wheel or to the disc;

(6) The engineer's brake valve or controller will cause the proper train line commands for each position or brake level setting;

(7) Brake pipe leakage does not exceed 5 pounds per square inch per minute if leakage will affect service performance;

(8) The emergency brake application and deadman pedal or other emergency control devices function as intended;

(9) Each brake shoe or pad is not below the minimum thickness established by the railroad. This thickness shall not be less than the minimum thickness necessary to safely travel the maximum distance allowed between Class I brake tests;

(10) Each angle cock and cutout cock is properly positioned;

(11) The brake rigging or the system mounted on the car for the transmission of the braking force operates as intended and does not bind or foul so as to impede the force delivered to a brake shoe, impede the release of a brake shoe, or otherwise adversely affect the operation of the brake system;

(12) If the train is equipped with electropneumatic brakes, an electropneumatic application of the brakes is made and the train is walked to determine that the brakes on each car in the train properly apply;

(13) Each brake disc is free of any crack in accordance with the manufacturer's specifications or, if no specifications exist, free of any crack to the extent that the design permits;

(14) If the equipment is provided with a brake indicator, the brake indicator operates as intended; and

(15) The communication of brake pipe pressure changes at the rear of the train is verified, which may be accomplished by observation of an application and release of the brakes on the last car in the train.

(h) *Records.* A record shall be maintained of each Class I brake test performed.

(1) This record may be maintained in writing or electronically, provided FRA has access to the record upon request.

(2) The written or electronic record must contain the following information:

(i) The date and time that the Class I brake test was performed;

(ii) The location where the test was performed;

(iii) The identification number of the controlling locomotive of the train;

(iv) The total number of cars inspected during the test; and

(v) The signature or electronic identification of the inspector.

(3) This record shall be maintained at the place where the inspection is conducted or at one central location and shall be retained for at least 92 days.

(i) A long-distance, intercity passenger train that misses a scheduled calendar day Class I brake test due to

a delay en route may proceed to the point where the Class I brake test was scheduled to be performed. A Class I brake test shall be completed at that point prior to placing the train back in service.

(j) In addition to complying with all the Class I brake test requirements performed by a qualified maintenance person as contained in paragraphs (a) through (i) of this section, railroads operating passenger equipment that is not designed to permit the visual observation of the brake actuation and release without the inspector going on, under, or between the equipment in accordance with § 238.231(b) shall perform an additional inspection. At a minimum, the additional inspection requirement for such equipment shall include all of the following:

(1) An additional inspection by a qualified maintenance person of all items and components contained in paragraphs (g)(1) through (g)(15) of this section;

(2) The additional inspection shall be conducted at an interval not to exceed five (5) in-service days and shall be conducted while the equipment is over an inspection pit or on a raised inspection track; and

(3) A record of the additional inspection shall be maintained pursuant to the requirements contained in paragraph (h) of this section. This record can be combined with the Class I brake test record.

[64 FR 25660, May 12, 1999, as amended at 65 FR 41309, July 3, 2000; 71 FR 61862, Oct. 19, 2006]

§ 238.315 Class IA brake test.

(a) Except as provided in paragraph (b) of this section, either a Class I or a Class IA brake test shall be performed:

(1) Prior to the first morning departure of each commuter or short-distance intercity passenger train, unless all of the following conditions are satisfied:

(i) A Class I brake test was performed within the previous twelve (12) hours;

(ii) The train has not been used in passenger service since the performance of the Class I brake test; and

(iii) The train has not been disconnected from a source of compressed air for more than four hours since the performance of the Class I brake test; and

(2) Prior to placing a train in service that has been off a source of compressed air for more than four hours.

(b) A commuter or short-distance intercity passenger train that provides continuing late night service that began prior to midnight may complete its daily operating cycle after midnight without performing another Class I or Class IA brake test. A Class I or Class IA brake test shall be performed on such a train before it starts a new daily operating cycle.

(c) A Class IA brake test may be performed at a shop or yard site and is not required to be repeated at the first passenger terminal if the train remains on a source of compressed air and:

(1) The train remains in the custody of the train crew; or

(2) The train crew receives notice that the Class IA brake test has been performed.

(d) The Class IA brake test shall be performed by either a qualified person or a qualified maintenance person.

(e) Except as provided in § 238.15(b), a railroad shall not use or haul a passenger train in passenger service from a location where a Class IA brake test has been performed, or was required by this part to have been performed, with less than 100 percent operative brakes.

(f) A Class IA brake test shall be performed at the air pressure at which the train's air brakes will be operated and shall determine and ensure that:

(1) Brake pipe leakage does not exceed 5 pounds per square inch per minute if brake pipe leakage will affect service performance;

(2) Each brake sets and releases by inspecting in the manner described in paragraph (g) of this section;

(3) For MU locomotives that utilize an electric signal to communicate a service brake application and only a pneumatic signal to propagate an emergency brake application, the emergency brake application functions as intended.

(4) Each angle cock and cutout cock is properly set;

(5) The communication of brake pipe pressure changes at the rear of the

train is verified, which may be accomplished by observation of an application and release of the brakes on the last car in the train; and

(6) The communicating signal system is tested and known to be operating as intended; a tested and operating two-way radio system meets this requirement.

(g) In determining whether each brake sets and releases—

(1) The inspection of the set and release of the brakes shall be completed by walking the train to directly observe the set and release of each brake, if the railroad determines that such a procedure is safe.

(2) If the railroad determines that operating conditions pose a safety hazard to an inspector walking the brakes, brake indicators may be used to verify the set and release on cars so equipped. However, the observation of the brake indicators shall not be made from the cab of the locomotive. The inspector shall walk the train in order to position himself or herself to accurately observe each indicator.

[64 FR 25660, May 12, 1999, as amended at 65 FR 41310, July 3, 2000; 67 FR 19991, Apr. 23, 2002]

§ 238.317 Class II brake test.

(a) A Class II brake test shall be performed on a passenger train when any of the following events occurs:

(1) Whenever the control stand used to control the train is changed; except if the control stand is changed to facilitate the movement of a passenger train from one track to another within a terminal complex while not in passenger service. In these circumstances, a Class II brake test shall be performed prior to the train's departure from the terminal complex with passengers;

(2) Prior to the first morning departure of each commuter or short-distance intercity passenger train where a Class I brake test remains valid as provided in § 238.315(a)(1);

(3) When previously tested units (i.e., cars that received a Class I brake test within the previous calendar day and have not been disconnected from a source of compressed air for more than four hours) are added to the train;

(4) When cars or equipment are removed from the train; and

(5) When an operator first takes charge of the train, except for face-to-face relief.

(b) A Class II brake test shall be performed by a qualified person or a qualified maintenance person.

(c) Except as provided in § 238.15, a railroad shall not use or haul a passenger train in passenger service from a terminal or yard where a Class II brake test has been performed, or was required by this part to have been performed, with any of the brakes cut-out, inoperative, or defective.

(d) In performing a Class II brake test on a train, a railroad shall determine that:

(1) The brakes on the rear unit of the train apply and release in response to a signal from the engineer's brake valve or controller of the leading or controlling unit, or a gauge or similar device located at the rear of the train or in the cab of the rear unit indicates that brake pipe pressure changes are properly communicated at the rear of the train;

(2) For MU locomotives that utilize an electric signal to communicate a service brake application and only a pneumatic signal to propagate an emergency brake application, the emergency brake application functions as intended.

(3) The communicating signal system is tested and known to be operating as intended; a tested and operating two-way radio system meets this requirement.

[64 FR 25660, May 12, 1999, as amended at 65 FR 41310, July 3, 2000; 67 FR 19991, Apr. 23, 2002]

§ 238.319 Running brake test.

(a) As soon as conditions safely permit, a running brake test shall be performed on each passenger train after the train has received, or was required under this part to have received, either a Class I, Class IA, or Class II brake test.

(b) A running brake test shall be performed whenever the control stand used to control the train is changed to facilitate the movement of a passenger train from one track to another within a terminal complex while not in passenger service.

(c) The running brake test shall be conducted in accordance with the railroad's established operating rules, and shall be made by applying brakes in a manner that allows the engineer to ascertain whether the brakes are operating properly.

(d) If the engineer determines that the brakes are not operating properly, the engineer shall stop the train and follow the procedures provided in § 238.15.

§ 238.321 Out-of-service credit.

When a passenger car is out of service for 30 or more consecutive days or is out of service when it is due for any test or inspection required by § 238.307 or § 238.309 an out of use notation showing the number of out of service days shall be made in the records required under § 238.307(e) and § 238.309(f). If the passenger car is out of service for one or more periods of at least 30 consecutive days, the interval prescribed for any test or inspection required by § 238.307 and § 238.309 may be extended by the number of days in each period the passenger car is out of service since the last test or inspection in question. A movement made in accordance with § 229.9 of this chapter or § 238.17 is not considered service for the purposes of determining the out-of-service credit.

[71 FR 61862, Oct. 19, 2006]

Subpart E—Specific Requirements for Tier II Passenger Equipment

§ 238.401 Scope.

This subpart contains specific requirements for railroad passenger equipment operating at speeds exceeding 125 mph but not exceeding 150 mph. The requirements of this subpart apply beginning on September 9, 1999. As stated in § 238.433(b), all such passenger equipment remains subject to the requirements concerning couplers and uncoupling devices contained in Federal statute at 49 U.S.C. chapter 203 and in FRA regulations at part 231 and § 232.2 of this chapter.

§ 238.403 Crash energy management.

(a) Each power car and trailer car shall be designed with a crash energy management system to dissipate kinetic energy during a collision. The crash energy management system shall provide a controlled deformation and collapse of designated sections within the unoccupied volumes to absorb collision energy and to reduce the decelerations on passengers and crewmembers resulting from dynamic forces transmitted to occupied volumes.

(b) The design of each unit shall consist of an occupied volume located between two normally unoccupied volumes. Where practical, sections within the unoccupied volumes shall be designed to be structurally weaker than the occupied volume. During a collision, the designated sections within the unoccupied volumes shall start to deform and eventually collapse in a controlled fashion to dissipate energy before any structural damage occurs to the occupied volume.

(c) At a minimum, each Tier II passenger train shall be designed to meet the following requirements:

(1) Thirteen megajoules (MJ) shall be absorbed at each end of the train through the controlled crushing of unoccupied volumes, and of this amount a minimum of 5 MJ shall be absorbed ahead of the operator's cab in each power car;

(2) A minimum of an additional 3 MJ shall be absorbed by the power car structure between the operator's cab and the first trailer car; and

(3) The end of the first trailer car adjacent to each power car shall absorb a minimum of 5 MJ through controlled crushing.

(d) For a 30-mph collision of a Tier II passenger train on tangent, level track with an identical stationary train:

(1) When seated anywhere in a trailer car, the velocity at which a 50th-percentile adult male contacts the seat back ahead of him shall not exceed 25 mph; and

(2) The deceleration of the occupied volumes of each trailer car shall not exceed 8g. For the purpose of demonstrating compliance with this paragraph, deceleration measurements may be processed through a low-pass filter having a bandwidth of 50 Hz.

(e) Compliance with paragraphs (a) through (d) of this section shall be

demonstrated by analysis using a dynamic collision computer model. For the purpose of demonstrating compliance, the following assumptions shall be made:

(1) The train remains upright, in line, and with all wheels on the track throughout the collision; and

(2) Resistance to structural crushing follows the force-versus-displacement relationship determined during the structural analysis required as part of the design of the train.

(f) Passenger seating shall not be permitted in the leading unit of a Tier II passenger train.

§ 238.405 Longitudinal static compressive strength.

(a) To form an effective crash refuge for crewmembers occupying the cab of a power car, the underframe of the cab of a power car shall resist a minimum longitudinal static compressive force of 2,100,000 pounds without permanent deformation to the cab, unless equivalent protection to crewmembers is provided under an alternate design approach, validated through analysis and testing, and approved by FRA under the provisions of § 238.21.

(b) The underframe of the occupied volume of each trailer car shall resist a minimum longitudinal static compressive force of 800,000 pounds without permanent deformation to the car. To demonstrate compliance with this requirement, the 800,000-pound load shall be applied to the underframe of the occupied volume as it would be transmitted to the underframe by the full structure of the vehicle.

(c) Unoccupied volumes of a power car or a trailer car designed to crush as part of the crash energy management design are not subject to the requirements of this section.

§ 238.407 Anti-climbing mechanism.

(a) Each power car shall have an anti-climbing mechanism at its forward end capable of resisting an ultimate upward or downward static vertical force of 200,000 pounds. A power car constructed with a crash energy management design is permitted to crush in a controlled manner before the anti-climbing mechanism fully engages.

(b) Interior train coupling points between units, including between units of articulated cars or other permanently joined units of cars, shall have an anti-climbing mechanism capable of resisting an upward or downward vertical force of 100,000 pounds without yielding.

(c) The forward coupler of a power car shall be attached to the car body to resist a vertical downward force of 100,000 pounds for any horizontal position of the coupler without yielding.

§ 238.409 Forward end structures of power car cabs.

This section contains requirements for the forward end structure of the cab of a power car. (A conceptual implementation of this end structure is provided in Figure 1 to this subpart.)

(a) *Center collision post.* The forward end structure shall have a full-height center collision post, or its structural equivalent, capable of withstanding the following:

(1) A shear load of 500,000 pounds at its joint with the underframe without exceeding the ultimate strength of the joint;

(2) A shear load of 150,000 pounds at its joint with the roof without exceeding the ultimate strength of the joint; and

(3) A horizontal, longitudinal force of 300,000 pounds, applied at a point on level with the bottom of the windshield, without exceeding its ultimate strength.

(b) *Side collision posts.* The forward end structure shall have two side collision posts, or their structural equivalent, located at approximately the one-third points laterally, each capable of withstanding the following:

(1) A shear load of 500,000 pounds at its joint with the underframe without exceeding the ultimate strength of the joint; and

(2) A horizontal, longitudinal force of 300,000 pounds, applied at a point on level with the bottom of the windshield, without exceeding its ultimate strength.

(c) *Corner posts.* The forward end structure shall have two full-height corner posts, or their structural equivalent, each capable of withstanding the following:

(1) A horizontal, longitudinal or lateral shear load of 300,000 pounds at its joint with the underframe, without exceeding the ultimate strength of the joint;

(2) A horizontal, lateral force of 100,000 pounds applied at a point 30 inches up from the underframe attachment, without exceeding the yield or the critical buckling stress; and

(3) A horizontal, longitudinal or lateral shear load of 80,000 pounds at its joint with the roof, without exceeding the ultimate strength of the joint.

(d) *Skin*. The skin covering the forward-facing end of each power car shall be:

(1) Equivalent to a ½-inch steel plate with a 25,000 pounds-per-square-inch yield strength—material of a higher yield strength may be used to decrease the required thickness of the material provided at least an equivalent level of strength is maintained;

(2) Securely attached to the end structure; and

(3) Sealed to prevent the entry of fluids into the occupied cab area of the equipment. As used in paragraph (d), the term ''skin'' does not include forward-facing windows and doors.

§ 238.411 Rear end structures of power car cabs.

The rear end structure of the cab of a power car shall be designed to include the following elements, or their structural equivalent. (A conceptual implementation of this end structure is provided in Figure 2 to this subpart.)

(a) *Corner posts*. The rear end structure shall have two full-height corner posts, or their structural equivalent, each capable of withstanding the following:

(1) A horizontal, longitudinal or lateral shear load of 300,000 pounds at its joint with the underframe without exceeding the ultimate strength of the joint; and

(2) A horizontal, longitudinal or lateral shear load of 80,000 pounds at its joint with the roof without exceeding the ultimate strength of the joint.

(b) *Collision posts*. The rear end structure shall have two full-height collision posts, or their structural equivalent, each capable of withstanding the following:

(1) A horizontal, longitudinal shear load of 500,000 pounds at its joint with the underframe without exceeding the ultimate strength of the joint; and

(2) A horizontal, longitudinal shear load of 75,000 pounds at its joint with the roof without exceeding the ultimate strength of the joint.

[64 FR 25660, May 12, 1999, as amended at 67 FR 19991, Apr. 23, 2002]

§ 238.413 End structures of trailer cars.

(a) Except as provided in paragraph (b) of this section, the end structure of a trailer car shall be designed to include the following elements, or their structural equivalent. (A conceptual implementation of this end structure is provided in Figure 3 to this subpart.)

(1) *Corner posts*. Two full-height corner posts, each capable of withstanding the following:

(i) A horizontal, longitudinal shear load of 150,000 pounds at its joint with the underframe without exceeding the ultimate strength of the joint;

(ii) A horizontal, longitudinal or lateral force of 30,000 pounds applied at a point 18 inches up from the underframe attachment without exceeding the yield or the critical buckling stress; and

(iii) A horizontal, longitudinal or lateral shear load of 20,000 pounds at its joint with the roof without exceeding the ultimate strength of the joint.

(2) *Collision posts*. Two full-height collision posts each capable of withstanding the following:

(i) A horizontal, longitudinal shear load of 300,000 pounds at its joint with the underframe without exceeding the ultimate strength of the joint; and

(ii) A horizontal, longitudinal shear load of 60,000 pounds at its joint with the roof without exceeding the ultimate strength of the joint.

(b) If the trailer car is designed with an end vestibule, the end structure inboard of the vestibule shall have two full-height corner posts, or their structural equivalent, each capable of withstanding the following (A conceptual implementation of this end structure is provided in Figure 4 to this subpart):

(1) A horizontal, longitudinal shear load of 200,000 pounds at its joint with

the underframe without exceeding the ultimate strength of the joint;

(2) A horizontal, lateral force of 30,000 pounds applied at a point 18 inches up from the underframe attachment without exceeding the yield or the critical buckling stress;

(3) A horizontal, longitudinal force of 50,000 pounds applied at a point 18 inches up from the underframe attachment without exceeding the yield or the critical buckling stress; and

(4) A horizontal, longitudinal or lateral shear load of 20,000 pounds at its joint with the roof without exceeding the ultimate strength of the joint.

§ 238.415 Rollover strength.

(a) Each passenger car and power car shall be designed to rest on its side and be uniformly supported at the top (''roof rail'') and the bottom chords (''side sill'') of the side frame. The allowable stress in the structural members of the occupied volumes for this condition shall be one-half yield or one-half the critical buckling stress, whichever is less. Minor localized deformations to the outer side skin of the passenger car or power car is allowed provided such deformations in no way intrude upon the occupied volume of each car.

(b) Each passenger car and power car shall also be designed to rest on its roof so that any damage in occupied areas is limited to roof sheathing and framing. The allowable stress in the structural members of the occupied volumes for this condition shall be one-half yield or one-half the critical buckling stress, whichever is less. Deformation to the roof sheathing and framing is allowed to the extent necessary to permit the vehicle to be supported directly on the top chords of the side frames and end frames.

§ 238.417 Side loads.

(a) Each passenger car body structure shall be designed to resist an inward transverse load of 80,000 pounds of force applied to the side sill and 10,000 pounds of force applied to the belt rail (horizontal members at the bottom of the window opening in the side frame).

(b) These loads shall be considered to be applied separately over the full vertical dimension of the specified member for any distance of 8 feet in the direction of the length of the car.

(c) The allowable stress shall be the lesser of the yield stress, except as otherwise allowed by this paragraph, or the critical buckling stress. In calculating the stress to show compliance with this requirement, local yielding of the side skin adjacent to the side sill and belt rail, and local yielding of the side sill bend radii at the crossbearer and floor-beam connections is allowed. For purposes of this paragraph, local yielding is allowed provided the resulting deformations in no way intrude upon the occupied volume of the car.

(d) The connections of the side frame to the roof and underframe shall support the loads specified in this section.

§ 238.419 Truck-to-car-body and truck component attachment.

(a) The ultimate strength of the truck-to-car-body attachment for each unit in a train shall be sufficient to resist without failure the following individually applied loads: a vertical force equivalent to 2g acting on the mass of the truck; and a force of 250,000 pounds acting in any horizontal direction on the truck, along with the resulting vertical reaction to this load.

(b) Each component of a truck (which include axles, wheels, bearings, the truck-mounted brake system, suspension system components, and any other components attached to the truck by design) shall remain attached to the truck when a force equivalent to 2g acting on the mass of the component is exerted in any direction on that component.

[64 FR 25660, May 12, 1999, as amended at 67 FR 19992, Apr. 23, 2002]

§ 238.421 Glazing.

(a) *General.* Except as provided in paragraphs (b) and (c) of this section, each exterior window on a passenger car and a power car cab shall comply with the requirements contained in part 223 of this chapter.

(b) *Particular end-facing exterior glazing requirements.* Each end-facing exterior window in a passenger car and a power car cab shall also, in the orientation in which it is installed in the car:

(1) Resist the impact of a 12-pound solid steel sphere traveling (i) at the

maximum speed at which the car will operate (ii) at an impact angle no less severe than horizontal to the car, with no penetration or spall. An impact angle that is perpendicular (90 degrees) to the window's surface shall be considered the most severe impact angle for purposes of this requirement; and

(2) Demonstrate anti-spalling performance by the use of a 0.001-inch thick aluminum witness plate, placed 12 inches from the window's surface during all impact tests. The witness plate shall contain no marks from spalled glazing particles after any impact test; and

(3) Be permanently marked, prior to installation, in such a manner that the marking is clearly visible after the material has been installed. The marking shall include:

(i) The words ''FRA TYPE IHP'' to indicate that the material has successfully passed the testing requirements specified in this paragraph;

(ii) The name of the manufacturer; and

(iii) The type or brand identification of the material.

(c) *Passenger equipment ordered prior to May 12, 1999*. Each exterior window in passenger equipment ordered prior to May 12, 1999, may comply with the following glazing requirements in lieu of the requirements specified in paragraphs (a) and (b) of this section:

(1) Each end-facing exterior window shall, in the orientation in which it is installed in the vehicle, resist the impact of a 12-pound solid steel sphere traveling (i) at the maximum speed at which the vehicle will operate (ii) at an impact angle no less severe than horizontal to the vehicle, with no penetration or spall. An impact angle that is perpendicular to the window's surface shall be considered the most severe impact angle for purposes of this requirement.

(2) Each side-facing exterior window shall resist the impact of a:

(i) 12-pound solid steel sphere at 15 mph, at an angle of 90 degrees to the window's surface, with no penetration or spall; and

(ii) A granite ballast stone weighing a minimum of 0.5 pounds, traveling at 75 mph and impacting at a 90-degree angle to the window's surface, with no penetration or spall.

(3) All exterior windows shall:

(i) Resist a single impact of a 9-mm, 147-grain bullet traveling at an impact velocity of 900 feet per second, with no bullet penetration or spall; and

(ii) Demonstrate anti-spalling performance by the use of a 0.002-inch thick aluminum witness plate, placed 12 inches from the window's surface during all impact tests. The witness plate shall contain no marks from spalled glazing particles after any impact test; and

(iii) Be permanently marked, prior to installation, in such a manner that the marking is clearly visible after the material has been installed. The marking shall include:

(A) The words ''FRA TYPE IH'' for end-facing glazing or ''FRA TYPE IIH'' for side-facing glazing, to indicate that the material has successfully passed the testing requirements of this section;

(B) The name of the manufacturer; and

(C) The type or brand identification of the material.

(d) *Glazing securement*. Each exterior window on a passenger car and a power car cab shall remain in place when subjected to:

(1) The forces due to air pressure differences caused when two trains pass at the minimum separation for two adjacent tracks, while traveling in opposite directions, each train traveling at the maximum authorized speed; and

(2) The impact forces that the glazed window is required to resist as specified in this section.

(e) *Stenciling*. Each car that is fully equipped with glazing materials that meet the requirements of this section shall be stenciled on an interior wall as follows: ''Fully Equipped with FRA Part 238 Glazing'' or similar words conveying that meaning, in letters at least ⅜ of an inch high.

[64 FR 25660, May 12, 1999, as amended at 67 FR 19992, Apr. 23, 2002]

§ 238.423 Fuel tanks.

(a) *External fuel tanks*. Each type of external fuel tank must be approved by FRA's Associate Administrator for Safety upon a showing that the fuel

tank provides a level of safety at least equivalent to a fuel tank that complies with the external fuel tank requirements in § 238.223(a).

(b) *Internal fuel tanks.* Internal fuel tanks shall comply with the requirements specified in § 238.223(b).

§ 238.425 Electrical system.

(a) *Circuit protection.* (1) The main propulsion power line shall be protected with a lightning arrestor, automatic circuit breaker, and overload relay. The lightning arrestor shall be run by the most direct path possible to ground with a connection to ground of not less than No. 6 AWG. These overload protection devices shall be housed in an enclosure designed specifically for that purpose with the arc chute vented directly to outside air.

(2) Head end power, including trainline power distribution, shall be provided with both overload and ground fault protection.

(3) Circuits used for purposes other than propelling the equipment shall be connected to their power source through circuit breakers or equivalent current-limiting devices.

(4) Each auxiliary circuit shall be provided with a circuit breaker located as near as practical to the point of connection to the source of power for that circuit; however, such protection may be omitted from circuits controlling safety-critical devices.

(b) *Main battery system.* (1) The main batteries shall be isolated from the cab and passenger seating areas by a noncombustible barrier.

(2) Battery chargers shall be designed to protect against overcharging.

(3) Battery circuits shall include an emergency battery cut-off switch to completely disconnect the energy stored in the batteries from the load.

(4) If batteries are of the type to potentially vent explosive gases, the batteries shall be adequately ventilated to prevent accumulation of explosive concentrations of these gases.

(c) *Power dissipation resistors.* (1) Power dissipating resistors shall be adequately ventilated to prevent overheating under worst-case operating conditions.

(2) Power dissipation grids shall be designed and installed with sufficient isolation to prevent combustion between resistor elements and combustible material.

(3) Power dissipation resistor circuits shall incorporate warning or protective devices for low ventilation air flow, over-temperature, and short circuit failures.

(4) Resistor elements shall be electrically insulated from resistor frames, and the frames shall be electrically insulated from the supports that hold them.

(d) *Electromagnetic interference and compatibility.* (1) The operating railroad shall ensure electromagnetic compatibility of the safety-critical equipment systems with their environment. Electromagnetic compatibility can be achieved through equipment design or changes to the operating environment.

(2) The electronic equipment shall not produce electrical noise that interferes with trainline control and communications or with wayside signaling systems.

(3) To contain electromagnetic interference emissions, suppression of transients shall be at the source wherever possible.

(4) Electrical and electronic systems of equipment shall be capable of operation in the presence of external electromagnetic noise sources.

(5) All electronic equipment shall be self-protected from damage or improper operation, or both, due to high voltage transients and long-term overvoltage or under-voltage conditions.

§ 238.427 Suspension system.

(a) *General requirements.* (1) Suspension systems shall be designed to reasonably prevent wheel climb, wheel unloading, rail rollover, rail shift, and a vehicle from overturning to ensure safe, stable performance and ride quality. These requirements shall be met:

(i) In all operating environments, and under all track conditions and loading conditions as determined by the operating railroad; and

(ii) At all track speeds and over all track qualities consistent with the Track Safety Standards in part 213 of this chapter, up to the maximum operating speed and maximum cant deficiency of the equipment.

(2) Passenger equipment shall meet the safety performance standards for suspension systems contained in appendix C to this part, or alternative standards providing at least equivalent safety if approved by FRA under the provisions of § 238.21.

(b) *Car body accelerations.* (1) A passenger car shall not operate under conditions that result in a steady-state lateral acceleration greater than 0.12g as measured parallel to the car floor inside the passenger compartment. During pre-revenue service acceptance testing of the equipment under § 238.111 and § 213.345 of this chapter, a passenger car shall demonstrate that steady-state lateral acceleration does not exceed 0.1g at the maximum intended cant deficiency.

(2) While traveling at the maximum operating speed over the intended route, the train suspension system shall be designed to:

(i) Limit the vertical acceleration, as measured by a vertical accelerometer mounted on the car floor, to no greater than 0.55g single event, peak-to-peak over a one second period;

(ii) Limit lateral acceleration, as measured by a lateral accelerometer mounted on the car floor, to no greater than 0.3g single event, peak-to-peak over a one second period; and

(iii) Limit the combination of lateral acceleration (a_L) and vertical acceleration (a_V) occurring over a one second period as expressed by the square root of ($a_L^2 + a_V^2$) to no greater than 0.6g, where a_L may not exceed 0.3g and a_V may not exceed 0.55g. Compliance with the requirements of paragraph (b)(2) shall be demonstrated during the pre-revenue service acceptance testing of the equipment required under § 238.111 and § 213.345 of this chapter.

(3) For purposes of this paragraph:

(i) Car body acceleration measurements shall be processed through a filter having a cut-off frequency of 10 Hz; and

(ii) Steady-state lateral acceleration shall be computed as the mathematical average of the accelerations in the body of a curve, between the spiral/curve points. In a compound curve, steady-state lateral acceleration shall be measured separately for each curve segment.

(c) *Truck (hunting) acceleration.* Each truck shall be equipped with a permanently installed lateral accelerometer mounted on the truck frame. The accelerometer output signals shall be processed through a filter having a band pass of 0.5 to 10 Hz to determine if hunting oscillations of the truck are occurring. If hunting oscillations are detected, the train monitoring system shall provide an alarm to the operator, and the train shall be slowed to a speed at least 5 mph less than the speed at which the hunting oscillations stopped. For purposes of this paragraph, hunting oscillations are considered a sustained cyclic oscillation of the truck which is evidenced by lateral accelerations in excess of 0.4g root mean square (mean-removed) for 2 seconds.

(d) *Overheat sensors.* Overheat sensors for each wheelset journal bearing shall be provided. The sensors may be placed either onboard the equipment or at reasonable intervals along the railroad's right-of-way.

[64 FR 25660, May 12, 1999, as amended at 67 FR 19992, Apr. 23, 2002]

§ 238.429 Safety appliances.

(a) *Couplers.* (1) The leading and the trailing ends of a semi-permanently coupled trainset shall each be equipped with an automatic coupler that couples on impact and uncouples by either activation of a traditional uncoupling lever or some other type of uncoupling mechanism that does not require a person to go between the equipment units.

(2) The automatic coupler and uncoupling device on the leading and trailing ends of a semi-permanently coupled trainset may be stored within a removable shrouded housing.

(3) If the units in a train are not semi-permanently coupled, both ends of each unit shall be equipped with an automatic coupler that couples on impact and uncouples by either activation of a traditional uncoupling lever or some other type of uncoupling mechanism that does not require a person to go between the equipment units.

(b) *Hand brakes.* Except as provided in paragraph (f) of this section, Tier II trains shall be equipped with a parking or hand brake that can be applied and released manually and that is capable

of holding the train on a 3-percent grade.

(c) *Safety appliance mechanical strength and fasteners.* (1) All handrails, handholds, and sill steps shall be made of 1-inch diameter steel pipe, ⅝-inch thickness steel, or a material of equal or greater mechanical strength.

(2) All safety appliances shall be securely fastened to the car body structure with mechanical fasteners that have mechanical strength greater than or equal to that of a ½-inch diameter SAE grade steel bolt mechanical fastener.

(i) Safety appliance mechanical fasteners shall have mechanical strength and fatigue resistance equal to or greater than a ½-inch diameter SAE steel bolt.

(ii) Mechanical fasteners shall be installed with a positive means to prevent unauthorized removal. Self-locking threaded fasteners do not meet this requirement.

(iii) Mechanical fasteners shall be installed to facilitate inspection.

(d) *Handrails and handholds.* Except as provided in paragraph (f) of this section:

(1) Handrails shall be provided for passengers on both sides of all steps used to board or depart the train.

(2) Exits on a power vehicle shall be equipped with handrails and handholds so that crewmembers can get on and off the vehicle safely.

(3) Throughout their entire length, handrails and handholds shall be a color that contrasts with the color of the vehicle body to which they are fastened.

(4) The maximum distance above the top of the rail to the bottom of vertical handrails and handholds shall be 51 inches, and the minimum distance shall be 21 inches.

(5) Vertical handrails and handholds shall be installed to continue to a point at least equal to the height of the top edge of the control cab door.

(6) The minimum hand clearance distance between a vertical handrail or handhold and the vehicle body shall be 2½ inches for the entire length.

(7) All vertical handrails and handholds shall be securely fastened to the vehicle body.

(8) If the length of the handrail exceeds 60 inches, it shall be securely fastened to the power vehicle body with two fasteners at each end.

(e) *Sill steps.* Except as provided in paragraph (f) of this section, each power vehicle shall be equipped with a sill step below each exterior door as follows:

(1) The sill step shall have a minimum cross-sectional area of ½ by 3 inches;

(2) The sill step shall be made of steel or a material of equal or greater strength and fatigue resistance;

(3) The minimum tread length of the sill step shall be 10 inches;

(4) The minimum clear depth of the sill step shall be 8 inches;

(5) The outside edge of the tread of the sill step shall be flush with the side of the car body structure;

(6) Sill steps shall not have a vertical rise between treads exceeding 18 inches;

(7) The lowest sill step tread shall be not more than 24, preferably not more than 22, inches above the top of the track rail;

(8) Sill steps shall be a color that contrasts with the color of the power vehicle body to which they are fastened;

(9) Sill steps shall be securely fastened;

(10) At least 50 percent of the tread surface area of each sill step shall be open space; and

(11) The portion of the tread surface area of each sill step which is not open space and is normally contacted by the foot shall be treated with an anti-skid material.

(f) *Exceptions.* (1) If the units of the equipment are semi-permanently coupled, with uncoupling done only at maintenance facilities, the equipment units that are not required by paragraph (a) of this section to be equipped with automatic couplers need not be equipped with sill steps or end or side handholds that would normally be used to safely perform coupling and uncoupling operations.

(2) If the units of the equipment are not semi-permanently coupled, the units shall be equipped with hand brakes, sill steps, end handholds, and

side handholds that meet the requirements contained in § 231.14 of this chapter.

(3) If two trainsets are coupled to form a single train that is not semi-permanently coupled (i.e., that is coupled by an automatic coupler), the automatically coupled ends shall be equipped with an end handhold that is located and installed so that an individual can safely couple and uncouple the trainsets. The end handhold shall be not more than 16 inches from each side of the car and shall extend the remaining length of the end of the car. (If the equipment is designed with a tapered nose, the side of the car shall be determined based on the outer dimension of the tapered nose where the end handhold is attached.) The end handhold shall also meet the mechanical strength and design requirements contained in paragraphs (c), (d)(3), and (d)(6) of this section. If the trainsets are semi-permanently coupled, this safety appliance is not required.

(g) *Optional safety appliances.* Safety appliances installed at the option of the railroad shall be firmly attached with mechanical fasteners and shall meet the design and installation requirements provided in this section.

[64 FR 25660, May 12, 1999, as amended at 67 FR 19992, Apr. 23, 2002]

§ 238.431 Brake system.

(a) A passenger train's brake system shall be capable of stopping the train from its maximum operating speed within the signal spacing existing on the track over which the train is operating under worst-case adhesion conditions.

(b) The brake system shall be designed to allow an inspector to determine that the brake system is functioning properly without having to place himself or herself in a dangerous position on, under, or between the equipment.

(c) Passenger equipment shall be provided with an emergency brake application feature that produces an irretrievable stop, using a brake rate consistent with prevailing adhesion, passenger safety, and brake system thermal capacity. An emergency brake application shall be available at any time, and shall be initiated by an unintentional parting of the train. A means to initiate an emergency brake application shall be provided at two locations in each unit of the train; however, where a unit of the train is 45 feet or less in length a means to initiate an emergency brake application need only be provided at one location in the unit.

(d) The brake system shall be designed to prevent thermal damage to wheels and brake discs. The operating railroad shall demonstrate through analysis and testing that no thermal damage results to the wheels or brake discs under conditions resulting in maximum braking effort being exerted on the wheels or discs.

(e) The following requirements apply to blended braking systems:

(1) Loss of power or failure of the dynamic brake does not result in exceeding the allowable stopping distance;

(2) The friction brake alone is adequate to safely stop the train under all operating conditions;

(3) The operational status of the electric portion of the brake system shall be displayed for the train operator in the control cab; and

(4) The operating railroad shall demonstrate through analysis and testing the maximum operating speed for safe operation of the train using only the friction brake portion of the blended brake with no thermal damage to wheels or discs.

(f) The brake system design shall allow a disabled train's pneumatic brakes to be controlled by a conventional locomotive, during a rescue operation, through brake pipe control alone.

(g) An independent failure-detection system shall compare brake commands with brake system output to determine if a failure has occurred. The failure detection system shall report brake system failures to the automated train monitoring system.

(h) Passenger equipment shall be equipped with an adhesion control system designed to automatically adjust the braking force on each wheel to prevent sliding during braking. In the event of a failure of this system to prevent wheel slide within preset parameters, a wheel slide alarm that is visual or audible, or both, shall alert the

train operator in the cab of the controlling power car to wheel-slide conditions on any axle of the train.

§ 238.433 Draft system.

(a) Leading and trailing automatic couplers of trains shall be compatible with standard AAR couplers with no special adapters used.

(b) All passenger equipment continues to be subject to the requirements concerning couplers and uncoupling devices contained in Federal Statute at 49 U.S.C. chapter 203 and in FRA regulations at part 231 and § 232.2 of this chapter.

§ 238.435 Interior fittings and surfaces.

(a) Each seat back and seat attachment in a passenger car shall be designed to withstand, with deflection but without total failure, the load associated with the impact into the seat back of an unrestrained 95th-percentile adult male initially seated behind the seat back, when the floor to which the seat is attached decelerates with a triangular crash pulse having a peak of 8g and a duration of 250 milliseconds.

(b) Each seat back in a passenger car shall include shock-absorbent material to cushion the impact of occupants with the seat ahead of them.

(c) The ultimate strength of each seat attachment to a passenger car body shall be sufficient to withstand the following individually applied accelerations acting on the mass of the seat plus the mass of a seat occupant who is a 95th-percentile adult male:

(1) Lateral: 4g; and

(2) Vertical: 4g.

(d)(1) Other interior fittings shall be attached to the passenger car body with sufficient strength to withstand the following individually applied accelerations acting on the mass of the fitting:

(i) Longitudinal: 8g;

(ii) Lateral: 4g; and

(iii) Vertical: 4g.

(2) Fittings that can be expected to be impacted by a person during a collision, such as tables between facing seats, shall be designed for the mass of the fitting plus the mass of the number of occupants who are 95th-percentile adult males that could be expected to strike the fitting, when the floor of the passenger car decelerates with a triangular crash pulse having a peak of 8g and a duration of 250 milliseconds.

(e) The ultimate strength of the interior fittings and equipment in power car control cabs shall be sufficient to resist without failure loads due to the following individually applied accelerations acting on the mass of the fitting or equipment:

(1) Longitudinal: 12g;

(2) Lateral: 4g; and

(3) Vertical: 4g.

(f) To the extent possible, interior fittings, except seats, shall be recessed or flush-mounted. Corners and sharp edges shall be avoided or otherwise padded.

(g) Energy-absorbent material shall be used to pad surfaces likely to be impacted by occupants during collisions or derailments.

(h) Luggage stowage compartments shall be enclosed, and have an ultimate strength sufficient to resist loads due to the following individually applied accelerations acting on the mass of the luggage that the compartments are designed to accommodate:

(1) Longitudinal: 8g;

(2) Lateral: 4g; and

(3) Vertical: 4g.

(i) If, for purposes of showing compliance with the requirements of this section, the strength of a seat attachment is to be demonstrated through sled testing, the seat structure and seat attachment to the sled that are used in such testing must be representative of the actual seat structure in, and seat attachment to, the rail vehicle subject to the requirements of this section. If the attachment strength of any other interior fitting is to be demonstrated through sled testing, for purposes of showing compliance with the requirements of this section, such testing shall be conducted in a similar manner.

[64 FR 25660, May 12, 1999, as amended at 67 FR 19992, Apr. 23, 2002]

§ 238.437 [Reserved]

§ 238.439 Doors.

(a) Each passenger car shall have a minimum of two exterior side doors, each door providing a minimum clear opening with dimensions of 30 inches horizontally by 74 inches vertically.

NOTE: The Americans with Disabilities Act (ADA) Accessibility Specifications for Transportation Vehicles also contain requirements for doorway clearance (See 49 CFR part 38).

(b) Each passenger car shall be equipped with a manual override feature for each powered, exterior side door. Each manual override must be:

(1) Capable of releasing the door to permit it to be opened, without power, from both inside and outside the car;

(2) Located adjacent to the door which it controls; and

(3) Designed and maintained so that a person may readily access and operate the override device from both inside and outside the car without the use of any tool or other implement.

(c) The status of each powered, exterior side door in a passenger car shall be displayed to the crew in the operating cab. If door interlocks are used, the sensors used to detect train motion shall be nominally set to operate at 3 mph.

(d) Each powered, exterior side door in a passenger car shall be connected to an emergency back-up power system.

(e) A railroad may protect a manual override device used to open a powered, exterior door with a cover or a screen capable of removal without requiring the use of a tool or other implement.

(f) A passenger compartment end door (other than a door providing access to the exterior of the trainset) shall be equipped with a kick-out panel, pop-out window, or other similar means of egress in the event the door will not open, or shall be so designed as to pose a negligible probability of becoming inoperable in the event of car body distortion following a collision or derailment.

(g) Door exits shall be marked, and instructions provided for their use, as required by § 239.107(a) of this chapter.

[64 FR 25660, May 12, 1999, as amended at 67 FR 19993, Apr. 23, 2002]

§ 238.441 Emergency roof access.

(a) *Existing passenger cars and power cars.* Each passenger car and power car ordered prior to April 1, 2009 and placed in service for the first time prior to April 1, 2011, shall have a minimum of one roof hatch emergency access location with a minimum opening of 26 inches by 24 inches, or at least one structural weak point in the roof providing a minimum opening of the same dimensions, to provide access for properly equipped emergency response personnel. Each emergency roof access location shall be conspicuously marked, and legible and understandable operating instructions shall be posted at or near each such location.

(b) *New passenger cars.* Each passenger car ordered on or after April 1, 2009 or placed in service for the first time on or after April 1, 2011, shall comply with the emergency roof access requirements specified in § 238.123.

(c) *New power cars.* Each power car ordered on or after April 1, 2009, or placed in service for the first time on or after April 1, 2011, shall have a minimum of one emergency roof access location, with a minimum opening of 26 inches longitudinally by 24 inches laterally, and comply with the emergency roof access requirements specified in §§ 238.123(b), (d), and (e).

[73 FR 6412, Feb. 1, 2008]

§ 238.443 Headlights.

(a) Each power car shall be equipped with at least two headlights. Each headlight shall produce no less than 200,000 candela. One headlight shall be arranged to illuminate a person standing between the rails 800 feet ahead of the power car under clear weather conditions. The other headlight shall be arranged to illuminate a person standing between the rails 1,500 feet ahead of the power car under clear weather conditions.

(b) A power car with a headlight not in compliance with the requirements of paragraph (a) of this section shall be moved in accordance with the following:

(1) If one of the headlights is defective, the defect shall be considered a non-running gear defect subject to the provisions contained in § 238.17 of this part.

(2) If both headlights are defective, the power car shall be inspected and tagged in accordance with the requirements contained in § 238.17(c) relating to non-running gear defects. The power

car may continue to be used in passenger service only to the nearest forward location where the repairs necessary to bring the power car into compliance can be made or to the power car's next calendar day mechanical inspection, whichever occurs first.

[67 FR 19993, Apr. 23, 2002]

§ 238.445 Automated monitoring.

(a) Each passenger train shall be equipped to monitor the performance of the following systems or components:

(1) Reception of cab signals and train control signals;

(2) Truck hunting;

(3) Dynamic brake status;

(4) Friction brake status;

(5) Fire detection systems;

(6) Head end power status;

(7) Alerter or deadman control;

(8) Horn and bell;

(9) Wheel slide;

(10) Tilt system, if so equipped; and

(11) On-board bearing-temperature sensors, if so equipped.

(b) When any such system or component is operating outside of its predetermined safety parameters:

(1) The train operator shall be alerted; and

(2) Immediate corrective action shall be taken, if the system or component defect impairs the train operator's ability to safely operate the train. Immediate corrective action includes limiting the speed of the train.

(c) The monitoring system shall be designed with an automatic self-test feature that notifies the train operator that the monitoring capability is functioning correctly and alerts the train operator when a system failure occurs.

§ 238.447 Train operator's controls and power car cab layout.

(a) Train operator controls in the power car cab shall be arranged so as to minimize the chance of human error, and be comfortably within view and within easy reach when the operator is seated in the normal train control position.

(b) The train operator's control panel buttons, switches, levers, knobs, and the like shall be distinguishable by sight and by touch.

(c) An alerter shall be provided in the power car cab. If not acknowledged, the alerter shall cause a brake application to stop the train.

(d) Power car cab information displays shall be designed with the following characteristics:

(1) Simplicity and standardization shall be the driving criteria for design of formats for the display of information in the cab;

(2) Essential, safety-critical information shall be displayed as a default condition;

(3) Operator selection shall be required to display other than default information;

(4) Cab or train control signals shall be displayed for the operator; and

(5) Displays shall be readable from the operators's normal position under all lighting conditions.

(e) The power car cab shall be designed so at to permit the crew to have an effective field of view in the forward direction, as well as to the right and left of the direction of travel to observe objects approaching the train from either side. Field-of-view obstructions due to required structural members shall be minimized.

(f) Each seat provided for an employee regularly assigned to occupy a power car cab and any floor-mounted seat in the cab shall be:

(1) Secured to the car body with an attachment having an ultimate strength capable of withstanding the loads due to the following individually applied accelerations acting on the combined mass of the seat and the mass of a seat occupant who is a 95th-percentile adult male:

(i) Longitudinal: 12g;

(ii) Lateral: 4g; and

(iii) Vertical: 4g;

(2) Designed so that all adjustments have the range necessary to accommodate a person ranging from a 5th-percentile adult female to a 95th-percentile adult male, as persons possessing such characteristics are specified, correcting for clothing as appropriate, in any recognized survey after 1958 of weight, height, and other body dimensions of U.S. adults;

(3) Equipped with lumbar support that is adjustable from the seated position;

(4) Equipped with force-assisted, vertical-height adjustment, operated from the seated position;

(5) Equipped with a manually reclining seat back, adjustable from the seated position;

(6) Equipped with an adjustable headrest; and

(7) Equipped with folding, padded armrests.

(g) Sharp edges and corners shall be eliminated from the interior of the power car cab, and interior surfaces of the cab likely to be impacted by an employee during a collision or derailment shall be padded with shock-absorbent material.

FIGURE 1 TO SUBPART E OF PART 238—POWER CAR CAB FORWARD END STRUCTURE CONCEPTUAL IMPLEMENTATION

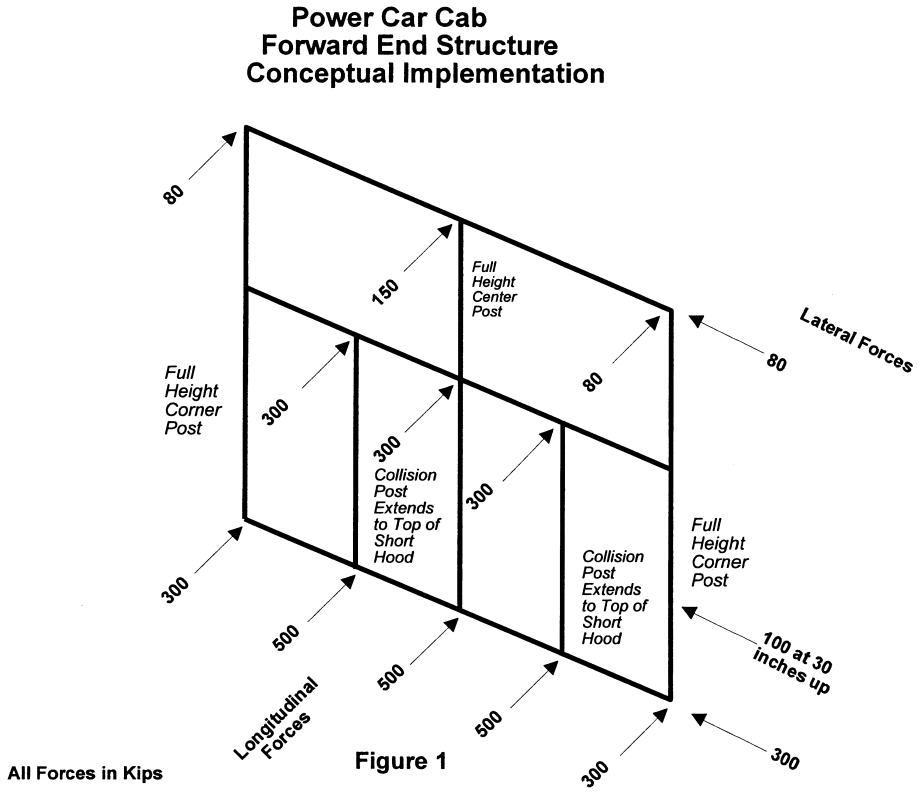

FIGURE 2 TO SUBPART E OF PART 238—POWER CAR CAB REAR END STRUCTURE CONCEPTUAL IMPLEMENTATION 1—TO SUBPART E

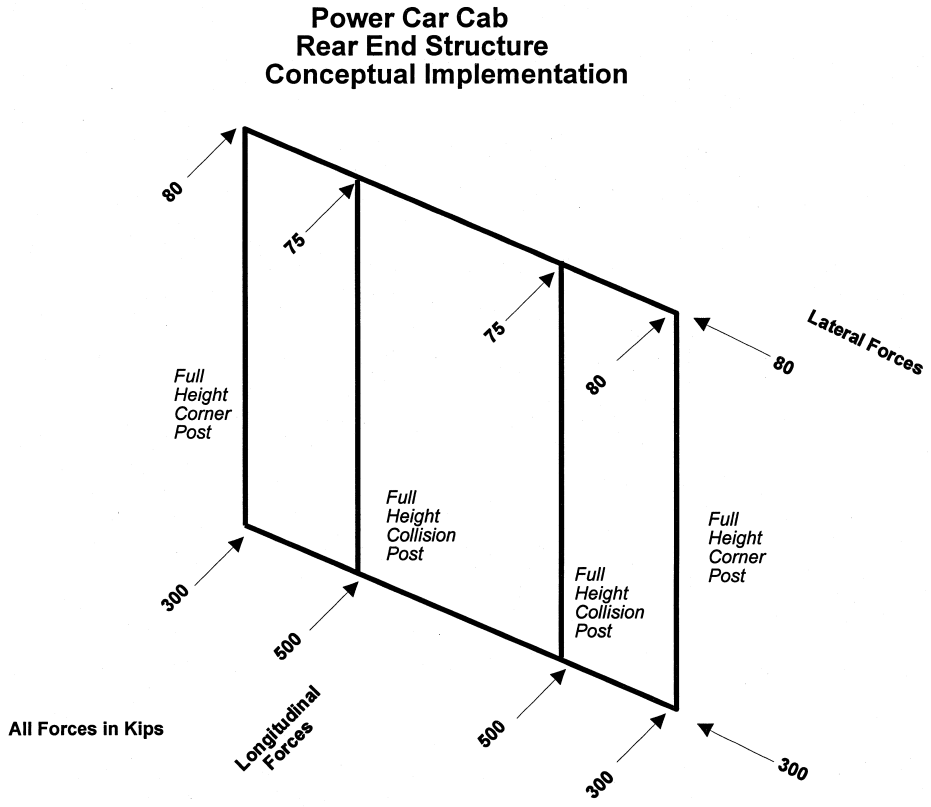

Figure 2

FIGURE 3 TO SUBPART E OF PART 238—TRAILER CAR END STRUCTURE CONCEPTUAL IMPLEMENTATION 1—TO SUBPART E

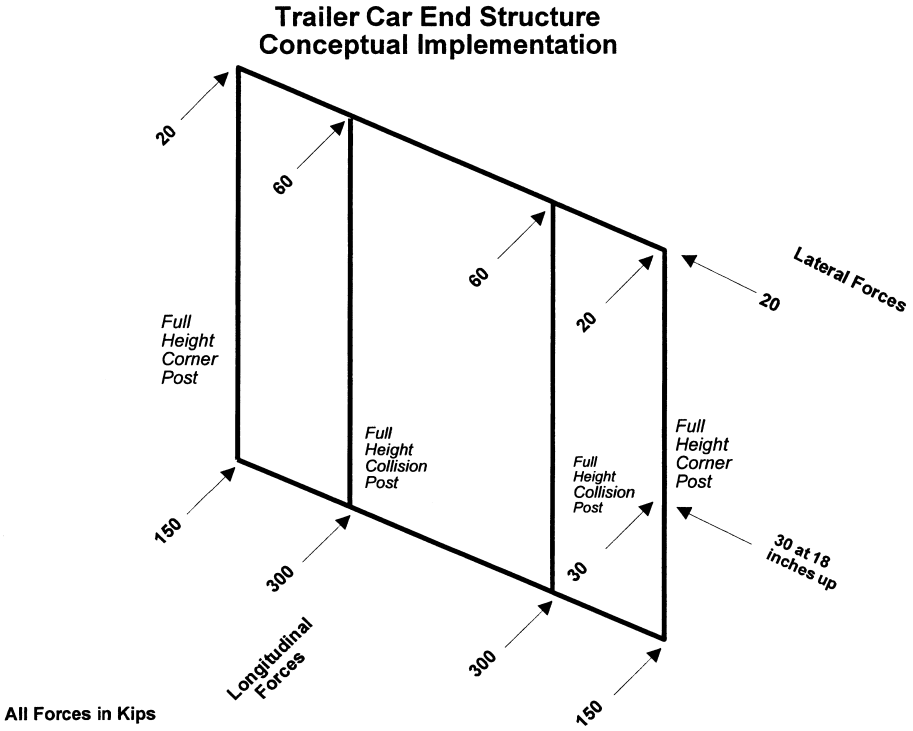

Figure 3

FIGURE 4 TO SUBPART E OF PART 238—TRAILER CAR IN-BOARD VESTIBULE END STRUCTURE CONCEPTUAL IMPLEMENTATION 1—TO SUBPART E

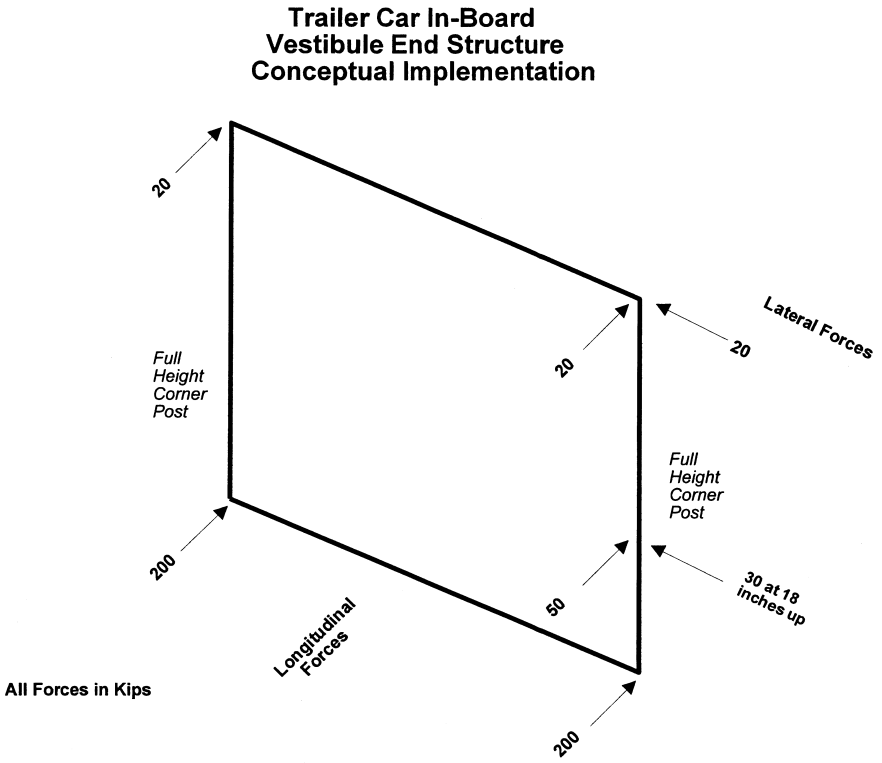

Figure 4

Subpart F—Inspection, Testing, and Maintenance Requirements for Tier II Passenger Equipment

§ 238.501 Scope.

This subpart contains inspection, testing, and maintenance requirements for railroad passenger equipment that operates at speeds exceeding 125 mph but not exceeding 150 mph.

§ 238.503 Inspection, testing, and maintenance requirements.

(a) *General.* Under the procedures provided in § 238.505, each railroad shall obtain FRA approval of a written inspection, testing, and maintenance program for Tier II passenger equipment prior to implementation of that program and prior to commencing passenger operations using that equipment. As further specified in this section, the program shall describe in detail the procedures, equipment, and other means necessary for the safe operation of the passenger equipment, including:

(1) Inspection procedures, intervals, and criteria;

(2) Testing procedures and intervals;

(3) Scheduled preventive-maintenance intervals;

(4) Maintenance procedures;

(5) Special testing equipment or measuring devices required to perform inspections, tests, and maintenance; and

(6) The training, qualification, and designation of employees and contractors to perform inspections, tests, and maintenance.

(b) *Compliance*. After the railroad's inspection, testing, and maintenance program is approved by FRA under § 238.505, the railroad shall adopt the program and shall perform—

(1) The inspections and tests of power brakes and other primary brakes as described in the program;

(2) The other inspections and tests described in the program in accordance with the procedures and criteria that the railroad identified as safety-critical; and

(3) The maintenance tasks described in the program in accordance with the procedures and intervals that the railroad identified as safety-critical.

(c) *General safety inspection, testing, and maintenance procedures*. The inspection, testing, and maintenance program under paragraph (a) of this section shall contain the railroad's written procedures to ensure that all systems and components of in service passenger equipment are free of any general condition that endangers the safety of the crew, passengers, or equipment. These procedures shall protect against:

(1) A continuous accumulation of oil or grease;

(2) Improper functioning of a component;

(3) A crack, break, excessive wear, structural defect, or weakness of a component;

(4) A leak;

(5) Use of a component or system under a condition that exceeds that for which the component or system is designed to operate; and

(6) Insecure attachment of a component.

(d) *Specific inspections*. The program under paragraph (a) of this section shall specify that all Tier II passenger equipment shall receive thorough inspections in accordance with the following standards:

(1) Except as provided in paragraph (d)(3) of this section, the equivalent of a Class I brake test contained in § 238.313 shall be conducted prior to a train's departure from an originating terminal and every 1,500 miles or once each calendar day, whichever comes first, that the train remains in continuous service.

(i) Class I equivalent brake tests shall be performed by a qualified maintenance person.

(ii) Except as provided in § 238.15(b), a railroad shall not use or haul a Tier II passenger train in passenger service from a location where a Class I equivalent brake test has been performed, or was required by this part to have been performed, with less than 100 percent operative brakes.

(2) Except as provided in paragraph (d)(3) of this section, a complete exterior and interior mechanical inspection, in accordance with the railroad's inspection program, shall be conducted by a qualified maintenance person at least once during each calendar day the equipment is used in service.

(3) Trains that miss a scheduled Class I brake test or mechanical inspection due to a delay en route may proceed to the point where the Class I brake test or mechanical inspection was scheduled to be performed.

(e) *Movement of trains with power brake defects*. Movement of trains with a power brake defect as defined in § 238.15 (any primary brake defect) shall be governed by § 238.15.

(f) *Movement of trains with other defects*. The movement of a train with a defect other than a power brake defect shall be conducted in accordance with § 238.17, with the following exceptions:

(1) The movement of a Tier II power car with a non-complying headlight shall be conducted in accordance with § 238.443(b) of this part; and

(2) When a failure of a secondary brake on a Tier II passenger train occurs en route, that train may remain in service until its next scheduled calendar day Class I brake test equivalent at a speed no greater than the maximum safe operating speed demonstrated through analysis and testing for braking with the friction brake alone. The brake system shall be restored to 100 percent operation before the train departs that inspection location.

(g) *Maintenance intervals*. The program under paragraph (a) of this section shall include the railroad's initial scheduled maintenance intervals for

Tier II equipment based on an analysis completed pursuant to the railroad's safety plan. The maintenance interval of a safety-critical component shall be changed only when justified by accumulated, verifiable operating data and approved by FRA under § 238.505 before the change takes effect.

(h) *Training, qualification, and designation program.* The program under paragraph (a) of this section shall describe the training, qualification, and designation program, as defined in the training program plan under § 238.109, established by the railroad to qualify individuals to inspect, test, and maintain the equipment.

(1) If the railroad deems it safety-critical, then only qualified individuals shall inspect, test, and maintain the equipment.

(2) Knowledge of the procedures described in paragraph (a) of this section shall be required to qualify an employee or contractor to perform an inspection, testing, or maintenance task under this part.

(i) *Standard procedures.* The program under paragraph (a) of this section shall include the railroad's written standard procedures for performing all safety-critical equipment inspection, testing, maintenance, and repair tasks necessary to ensure the safe and proper operation of the equipment. The inspection, testing, and maintenance program required by this section is not intended to address and should not include procedures to address employee working conditions that arise in the course of conducting the inspections, tests, and maintenance set forth in the program. When reviewing the railroad's program, FRA does not intend to review any portion of the program that relates to employee working conditions.

(j) *Annual review.* The inspection, testing, and maintenance program required by this section shall be reviewed by the railroad annually.

(k) *Quality control program.* Each railroad shall establish an inspection, testing, and maintenance quality control program enforced by railroad or contractor supervisors to reasonably ensure that inspections, tests, and maintenance are performed in accordance with Federal safety standards and the procedures established by the railroad.

(l) *Identification of safety-critical items.* In the program under paragraph (a) of this section, the railroad shall identify all inspection and testing procedures and criteria as well as all maintenance intervals that the railroad deems to be safety-critical.

[64 25660, May 12, 1999, as amended at 67 FR 19994, Apr. 23, 2002]

§ 238.505 Program approval procedure.

(a) *Submission.* Not less than 90 days prior to commencing passenger operations using Tier II passenger equipment, each railroad to which this subpart applies shall submit for approval an inspection, testing, and maintenance program for that equipment meeting the requirements of this subpart with the Associate Administrator for Safety, Federal Railroad Administration, 1120 Vermont Ave, Mail Stop 25, Washington, DC 20590. If a railroad seeks to amend an approved program, the railroad shall file with FRA's Associate Administrator for Safety a petition for approval of such amendment not less than 60 days prior to the proposed effective date of the amendment. A program responsive to the requirements of this subpart or any amendment to the program shall not be implemented prior to FRA approval.

(1) Each program or amendment under § 238.503 shall contain:

(i) The information prescribed in § 238.503 for such program or amendment;

(ii) The name, title, address, and telephone number of the primary person to be contacted with regard to review of the program or amendment; and

(iii) A statement affirming that the railroad has served a copy of the program or amendment on designated representatives of railroad employees, together with a list of the names and addresses of persons served.

(2) Each railroad shall serve a copy of each submission to FRA on designated representatives of railroad employees responsible for the equipment's operation, inspection, testing, and maintenance under this subpart.

(b) *Comment.* Not later than 45 days from the date of filing the program or

amendment, any person may comment on the program or amendment.

(1) Each comment shall set forth specifically the basis upon which it is made, and contain a concise statement of the interest of the commenter in the proceeding.

(2) Three copies of each comment shall be submitted to the Associate Administrator for Safety, Federal Railroad Administration, 1120 Vermont Ave., Mail Stop 25, Washington, DC 20590.

(3) The commenter shall certify that a copy of the comment was served on the railroad.

(c) *Approval.* (1) Within 60 days of receipt of each initial inspection, testing, and maintenance program, FRA will conduct a formal review of the program. FRA will then notify the primary railroad contact person and the designated employee representatives in writing whether the inspection, testing, and maintenance program is approved and, if not approved, the specific points in which the program is deficient. If a program is not approved by FRA, the railroad shall amend its program to correct all deficiencies and resubmit its program with the required revisions not later than 45 days prior to commencing passenger operations.

(2) FRA will review each proposed amendment to the program within 45 days of receipt. FRA will then notify the primary railroad contact person and the designated employee representatives in writing whether the proposed amendment has been approved by FRA and, if not approved, the specific points in which the proposed amendment is deficient. The railroad shall correct any deficiencies and file the corrected amendment prior to implementing the amendment.

(3) Following initial approval of a program or amendment, FRA may reopen consideration of the program or amendment for cause stated.

Subpart G—Specific Safety Planning Requirements for Tier II Passenger Equipment

§ 238.601 Scope.

This subpart contains specific safety planning requirements for the operation of Tier II passenger equipment, procurement of Tier II passenger equipment, and the introduction or major upgrade of new technology in existing Tier II passenger equipment that affects a safety system on such equipment.

§ 238.603 Safety planning requirements.

(a) Prior to commencing revenue service operation of Tier II passenger equipment, each railroad shall prepare and execute a written plan for the safe operation of such equipment. The plan may be combined with any other plan required under this part. The plan shall be updated at least every 365 days. At a minimum, the plan shall describe the approaches and processes to:

(1) Identify all requirements necessary for the safe operation of the equipment in its operating environment;

(2) Identify all known or potential hazards to the safe operation of the equipment;

(3) Eliminate or reduce the risk posed by each hazard identified to an acceptable level using a formal safety methodology such as MIL-STD–882; and

(4) Impose operational limitations, as necessary, on the operation of the equipment if the equipment cannot meet safety requirements.

(b) For the procurement of Tier II passenger equipment, and for each major upgrade or introduction of new technology in existing Tier II passenger equipment that affects a safety system on such equipment, each railroad shall prepare and execute a written safety plan. The plan may be combined with any other plan required under this part. The plan shall describe the approaches and processes to:

(1) Identify all safety requirements governing the design of the passenger equipment and its supporting systems;

(2) Evaluate the total system, including hardware, software, testing, and support activities, to identify known or potential safety hazards over the life cycle of the equipment;

(3) Identify safety issues during design reviews;

(4) Eliminate or reduce the risk posed by each hazard identified to an acceptable level using a formal safety methodology such as MIL-STD-882;

(5) Monitor the progress in resolving safety issues, reducing hazards, and meeting safety requirements;

(6) Develop a program of testing or analysis, or both, to demonstrate that safety requirements have been met; and

(7) Impose operational limitations, as necessary, on the operation of the equipment if the equipment cannot meet safety requirements.

(c) Each railroad shall maintain sufficient documentation to demonstrate how the operation and design of its Tier II passenger equipment complies with safety requirements or, as appropriate, addresses safety requirements under paragraphs (a)(4) and (b)(7) of this section. Each railroad shall maintain sufficient documentation to track how safety issues are raised and resolved.

(d) Each railroad shall make available to FRA for inspection and copying upon request each safety plan required by this section and any documentation required pursuant to such plan.

[64 25660, May 12, 1999, as amended at 67 FR 19994, Apr. 23, 2002]

APPENDIX A TO PART 238—SCHEDULE OF CIVIL PENALTIES[1]

Section	Violation	Willful violation
SUBPART A—GENERAL		
238.15 Movement of power brake defects:		
(b) Improper movement from Class I or IA brake test	5,000	7,500
(c) Improper movement of en route defect	2,500	5,000
(2), (3) Insufficient tag or record	1,000	2,000
(4) Failure to determine percent operative brake	2,500	5,000
(d) Failure to follow operating restrictions	5,000	7,500
(e) Failure to follow restrictions for inoperative front or rear unit	2,500	5,000
238.17 Movement of other than power brake defects: [1]		
(c)(4), (5) Insufficient tag or record	1,000	2,000
(d) Failure to inspect or improper use of roller bearings	2,500	5,000
(e) Improper movement of defective safety appliances	(1)	
238.19 Reporting and tracking defective equipment:		
(a) Failure to have reporting or tracking system	7,500	11,000
(b) Failure to retain records	2,000	4,000
(c) Failure to make records available	1,000	2,000
(d) Failure to list power brake repair points	2,000	4,000
SUBPART B—SAFETY PLANNING AND GENERAL REQUIREMENTS		
238.103 Fire protection plan/fire safety:		
(a) Failure to use proper materials	5,000	7,500
(b) Improper certification	1,000	2,000
(c) Failure to consider fire safety on new equipment	5,000	7,500
(d) Failure to perform fire safety analysis	5,000	7,500
(e) Failure to develop, adopt or comply with procedures	5,000	7,500
238.105 Train electronic hardware and software safety:		
(a), (b), (c) Failure to develop and maintain hardware and software safety	7,500	11,000
(d) Failure to include required design features	5,000	7,500
(e) Failure to comply with hardware and software safety program	5,000	7,500
238.107 Inspection, testing, and maintenance plan:		
(b) Failure to develop plan	7,500	11,000
(b)(1)–(5) Failure of plan to address specific item	3,000	6,000
(d) Failure to conduct annual review	5,000	7,500
238.109 Training, qualification, and designation program:		
(a) Failure to develop or adopt program	7,500	11,000
(b)(1)–(4) Failure of plan to address specific item	3,000	6,000
(b)(5)–(12) Failure to comply with specific required provision of the program	5,000	7,500
(b)(13) Failure to maintain adequate records	2,500	5,000
238.111 Pre-revenue service acceptance testing plan:		
(a) Failure to properly test previously used equipment	7,500	11,000
(b)(1) Failure to develop plan	7,500	11,000
(b)(2) Failure to submit plan to FRA	5,000	7,500
(b)(3) Failure to comply with plan	5,000	7,500
(b)(4) Failure to document results of testing	5,000	7,500
(b)(5) Failure to correct safety deficiencies or impose operating limits	5,000	7,500
(b)(6) Failure to maintain records	3,000	6,000
(b)(7) Failure to obtain FRA approval	5,000	7,500
238.113 Emergency window exits	2,500	5,000
238.114 Rescue access windows	2,500	5,000
238.115 Emergency lighting	2,500	5,000

Section	Violation	Willful violation
238.117 Protection against personal injury	2,500	5,000
238.119 Rim-stamped straight plate wheels	2,500	5,000
238.121 Emergency communication	2,500	5,000
238.123 Emergency roof access	2,500	5,000
SUBPART C—SPECIFIC REQUIREMENTS FOR TIER I EQUIPMENT		
238.203 Static end strength	2,500	5,000
238.205 Anti-climbing mechanism	2,500	5,000
238.207 Link between coupling mechanism and car body	2,500	5,000
238.209 Forward-facing end structure of locomotives	2,500	5,000
238.211 Collision posts	2,500	5,000
238.213 Corner posts	2,500	5,000
238.215 Rollover strength	2,500	5,000
238.217 Side structure	2,500	5,000
238.219 Truck-to-car-body attachment	2,500	5,000
238.221 Glazing	2,500	5,000
238.223 Fuel tanks	2,500	5,000
238.225 Electrical System	2,500	5,000
238.227 Suspension system	2,500	5,000
238.229 Safety appliances—general:.		
(e) Failure to properly identify equipment (per car)	2,500	5,000
(g) Failure to adopt or comply with inspection plan	2,500	5,000
(h) Failure to use qualified person (per car)	2,500	5,000
(i) Failure to properly conduct initial or periodic inspection (per car)	2,500	5,000
(j) Failure to take proper remedial action (per car)	2,500	5,000
(k) Failure to maintain records (per car)	2,000	4,000
238.230 Safety appliances—new equipment:.		
(b)(2) Failure to identify welded appliance (per car)	2,500	5,000
(b)(3) Failure to receive approval for use (per car)	2,500	5,000
(c)(2) Failure to make proper repair (per car)	2,500	5,000
238.231 Brake System (a)–(g), (i)–(n)	2,500	5,000
(h)(1), (2) Hand or parking brake missing or inoperative	5,000	7,500
(h)(3) Hand or parking brake inspection or record (per car)	2,500	5,000
(h)(4) Hand or parking brake not applied to hold unattended equipment or prematurely released	5,000	7,500
238.233 Interior fittings and surfaces	2,500	7,500
238.235 Doors	2,500	5,000
238.237 Automated monitoring	2,500	5,000
SUBPART D—INSPECTION, TESTING, AND MAINTENANCE REQUIREMENTS FOR TIER I EQUIPMENT		
238.303 Exterior mechanical inspection of passenger equipment:		
(a)(1) Failure to perform mechanical inspection	[1] 2,000	4,000
(a)(2) Failure to inspect secondary brake system	2,500	5,000
(b) Failure to perform inspection on car added to train	[1] 2,000	4,000
(c) Failure to utilize properly qualified personnel	2,000	4,000
(e)(1) Products of combustion not released outside cab	2,500	5,000
(e)(2) Battery not vented or gassing excessively	2,500	5,000
(e)(3) Coupler not in proper condition	2,500	5,000
(e)(4) No device under drawbar pins or connection pins	2,500	5,000
(e)(5) Suspension system and spring rigging not in proper condition	2,500	5,000
(e)(6) Truck not in proper condition	2,500	5,000
(e)(7) Side bearing not in proper condition	2,500	5,000
(e)(8) Wheel not in proper condition:		
(i), (iv) Flat spot(s) and shelled spot(s):		
(A) One spot 2½″ or more but less than 3″ in length	2,500	5,000
(B) One spot 3″ or more in length	5,000	7,500
(C) Two adjoining spots each of which is 2″ or more in length but less than 2½″ in length	2,500	5,000
(D) Two adjoining spots each of which are at least 2″ in length, if either spot is 2½7″ or more in length	5,000	7,500
(ii) Gouge or chip in flange:		
(A) More than 1½″ but less than 1⅝″ in length; and more than ½″ but less than ⅝″ in width	2,500	5,000
(B) 1⅝″ or more in length and ⅝″ or more in width	5,000	7,500
(iii) Broken rim	5,000	7,500
(v) Seam in tread	2,500	5,000
(vi) Flange thickness of:	2,500	5,000
(A) ⅞″ or less but more than.		
(B) 13⁄16″ or less	5,000	7,500
(vii) Tread worn hollow	2,500	5,000
(viii) Flange height of:		
(A) 1½″ or greater but less than 1⅝″	2,500	5,000

Section	Violation	Willful violation
(B) 1⅝″ or more	5,000	7,500
(ix) Rim thickness:		
(A) Less than 1″	2,500	5,000
(B) 15/16″ or less	5,000	7,500
(x) Crack or break in flange, tread, rim, plate, or hub:		
(A) Crack of less than 1″	2,500	5,000
(B) Crack of 1″ or more	5,000	7,500
(C) Break	5,000	7,500
(xi) Loose wheel	5,000	7,500
(xii) Welded wheel	5,000	7,500
(e)(10) Improper grounding or insulation	5,000	7,500
(e)(11) Jumpers or cable connections not in proper condition	2,500	5,000
(e)(12) Door or cover plate not properly marked	2,500	5,000
(e)(13) Buffer plate not properly placed	2,500	5,000
(e)(14) Diaphragm not properly placed or aligned	2,500	5,000
(e)(15) Secondary braking system not in operating mode or contains known defect	2,500	5,000
(e)(16) Roller bearings:		
(i) Overheated	5,000	7,500
(ii) Cap screw loose or missing	2,500	5,000
(iii) Cap screw lock broken or missing	1,000	2,000
(iv) Seal loose, damaged, or leaks lubricant	2,500	5,000
(e)(17) Air compressor inoperative	2,500	5,000
(g) Record of inspection:		
(1), (4) Failure to maintain record of inspection	5,000	4,000
(2) Record contains insufficient information	1,000	2,000
238.305 Interior mechanical inspection of passenger cars:		
(a) Failure to perform inspection	[1] 1,000	2,000
(b) Failure to utilize properly qualified personnel	1,000	2,000
(c)(1) Failure to protect against personal injury	2,500	5,000
(c)(2) Floors not free of condition that creates hazard	2,500	5,000
(c)(3) Access to manual door release not in place	2,000	4,000
(c)(4) Emergency equipment not in place	1,000	2,000
(c)(5) Emergency brake valve not stenciled or marked	2,500	5,000
(c)(6) Door or cover plates not properly marked	2,500	5,000
(c)(7) Safety signage not in place or legible	1,000	2,000
(c)(8) Trap door unsafe or improperly secured	2,500	5,000
(c)(9) Vestibule steps not illuminated	2,000	4,000
(c)(10) Door not safely operate as intended	2,500	5,000
(c)(11) Seat broken, loose, or not properly attached	2,500	5,000
(e) Record of inspection:		
(1), (4) Failure to maintain record of inspection	2,000	4,000
(2) Record contains insufficient information	1,000	1,000
(f) Record of inspection:		
(1), (4) Failure to maintain record of inspection	2,000	4,000
(2) Record contains insufficient information	1,000	2,000
238.307 Periodic mechanical inspection of passenger cars and unpowered vehicles:		
(a) Failure to perform periodic mechanical inspection	[1] 2,500	5,000
(b) Failure to utilize properly qualified personnel	2,500	5,000
(c)(1) Seat or seat attachment broken or loose	2,500	5,000
(c)(2) Luggage rack broken or loose	2,500	5,000
(c)(3) Bed, bunks, or restraints broken or loose	2,500	5,000
(c)(4) Emergency window exit not properly operate	2,500	5,000
(c)(5) Emergency lighting not operational	2,500	5,000
(c)(6) Switches not in proper condition	2,500	5,000
(c)(7) Coupler not in proper condition	2,500	5,000
(c)(8) Truck not equipped with securing arrangement	2,500	5,000
(c)(9) Truck center casting cracked or broken	5,000	7,500
(c)(10) General conditions endangering crew, passengers	2,500	5,000
(c)(13) Hand or parking brake test not performed	2,500	5,000
(d)(1) Manual door release not operate as intended	2,500	5,000
(d)(2) Hand or parking brake inspection not performed	2,500	5,000
(e)(1) Failure to maintain record of inspection	2,000	4,000
(i)–(iv) Record contains insufficient information	1,000	2,000
(f)(1) Record of inspection:		
(i) Failure to maintain record of inspection	2,000	4,000
(ii) Record contains insufficient information	1,000	2,000
238.309 Periodic brake equipment maintenance:		
(b) Failure to perform on MU locomotive	2,500	5,000
(c) Failure to perform on conventional locomotive	2,500	5,000
(d) Failure to perform on passenger coaches or other unpowered vehicle	2,500	5,000
(e) Failure to perform on cab car	2,500	5,000
(f) Record of periodic maintenance:		
(1), (2) Failure to maintain record or stencil	2,000	4,000

Section	Violation	Willful violation
238.311 Single car tests:		
(a) Failure to test in accord with required procedure	2,500	5,000
(b) Failure to utilize properly qualified personnel	2,500	5,000
(c), (e) Failure to perform single car test	2,500	5,000
(f) Improper movement of car for testing	2,000	4,000
(g) Failure to test after repair or replacement of component	2,000	4,000
238.313 Class I brake test:		
(a) Failure to perform on commuter or short distance intercity passenger train	[1] 10,000	15,000
(b) Failure to perform on long-distance intercity passenger train	[1] 10,000	15,000
(c) Failure to perform on cars added to passenger train	[1] 5,000	7,500
(d) Failure to utilized properly qualified personnel	5,000	7,500
(f) Passenger train used from Class I brake test with less than 100% operative brakes	5,000	7,500
(g) Partial failure to perform inspection on a passenger train	5,000	7,500
(3) Failure to adjust piston travel (per car)	2,500	5,000
(h) Failure to maintain record	2,000	4,000
(j) Failure to perform additional Class I brake test	5,000	7,500
(j)(3) Failure to maintain record	2,000	4,000
238.315 Class IA brake test:		
(a) Failure to perform inspection	[1] 5,000	7,500
(d) Failure to utilize properly qualified personnel	2,500	5,000
(e) Passenger train used from Class IA brake test with improper percentage of operative brakes	5,000	7,500
(f) Partial failure to perform inspection on passenger train	2,500	5,000
238.317 Class II brake test:		
(a) Failure to perform inspection	[1] 2,500	5,000
(b) Failure to utilize properly qualified personnel	2,500	5,000
(c) Improper use of defective equipment from Class II brake test	2,500	5,000
238.319 Running brake tests:		
(a), (b) Failure to perform test	2,000	4,000
238.321 Out-of-service credit	1,000	2,000
SUBPART E—SPECIFIC REQUIREMENTS FOR TIER II PASSENGER EQUIPMENT		
238.403 Crash energy management	2,500	5,000
238.405 Longitudinal static compressive strength	2,500	5,000
238.407 Anti-climbing mechanism	2,500	5,000
238.409 Forward end structures of power car cabs:		
(a) Center collision post	2,500	5,000
(b) Side collision posts	2,500	5,000
(c) Corner posts	2,500	5,000
(d) Skin	2,500	5,000
238.411 Rear end structures of power car cabs:		
(a) Corner posts	2,500	5,000
(b) Collision posts	2,500	5,000
238.413 End structures of trailer cars	2,500	5,000
238.415 Rollover strength	2,500	5,000
238.417 Side loads	2,500	5,000
238.419 Truck-to-car-body and truck component attachment	2,500	5,000
238.421 Glazing:		
(b) End-facing exterior glazing	2,500	5,000
(c) Alternate glazing requirements	2,500	5,000
(d) Glazing securement	1,000	2,000
(e) Stenciling	2,500	5,000
238.423 Fuel tanks:		
(a) External fuel tanks	2,500	5,000
(b) Internal fuel tanks	2,500	5,000
238.425 Electrical system:		
(a) Circuit protection	2,500	5,000
(b) Main battery system	2,500	5,000
(c) Power dissipation resistors	2,500	5,000
(d) Electromagnetic interference and compatibility	2,500	5,000
238.427 Suspension system	2,500	5,000
238.429 Safety Appliances:		
(a) Couplers	5,000	7,500
(b) Hand/parking brakes	5,000	7,500
(d) Handrail and handhold missing	2,500	5,000
(d)(1)–(8) Handrail or handhold improper design	2,500	5,000
(e) Sill step missing	5,000	7,500
(e)(1)–(11) Sill step improper design	2,500	5,000
(g) Optional safety appliances	2,500	5,000
238.431 Brake system	2,500	5,000
238.433 Draft System	2,500	5,000
238.435 Interior fittings and surfaces	2,500	5,000
238.437 [Reserved]	.....	.....

Section	Violation	Willful violation
238.439 Doors:		
(a) Exterior side doors	2,500	5,000
(b) Manual override feature	2,500	5,000
(c) Notification to crew of door status	2,500	5,000
(d) Emergency back-up power	2,500	5,000
(f) End door kick-out panel or pop-out window	2,500	5,000
(g) Marking and instructions	[Reserved]	
238.441 Emergency roof access	2,500	5,000
238.443 Headlights	2,500	5,000
238.445 Automated monitoring	2,500	5,000
238.447 Train operator's controls and power car cab layout	2,500	5,000
SUBPART F—INSPECTION, TESTING, AND MAINTENANCE REQUIREMENTS FOR TIER II PASSENGER EQUIPMENT		
238.503 Inspection, testing, and maintenance requirements:		
(a) Failure to develop inspection, testing, and maintenance program or obtain FRA approval	10,000	15,000
(b) Failure to comply with provisions of the program	5,000	7,500
(c) Failure to ensure equipment free of conditions which endanger safety of crew, passengers, or equipment	2,500	5,000
(d) Specific safety inspections:		
(1)(i) Failure to perform Class I brake test or equivalent	10,000	15,000
(1)(ii) Partial failure to perform Class I brake test or equivalent	5,000	7,500
(2)(i) Failure to perform exterior mechanical inspection	[1] 2,000	4,000
(2)(ii) Failure to perform interior mechanical inspection	[1] 1,000	2,000
(g) Failure to perform scheduled maintenance as required in program	2,500	5,000
(h) Failure to comply with training, qualification and designation program	5,000	7,500
(i) Failure to develop or comply with standard procedures for performing inspection, tests, and maintenance	2,500	5,000
(j) Failure to conduct annual review	5,000	7,500
(k) Failure to establish or utilize quality control program	5,000	7,500
SUBPART G—SPECIFIC SAFETY PLANNING REQUIREMENTS FOR TIER II PASSENGER EQUIPMENT		
238.603 Safety plan:		
(a) Failure to develop safety operating plan	7,500	11,000
(b) Failure to develop procurement plan	7,500	11,000
(1)–(7) Failure to develop portion of plan	2,500	5,000
(c) Failure to maintain documentation	2,500	5,000

[1] A penalty may be assessed against an individual only for a willful violation. Generally when two or more violations of these regulations are discovered with respect to a single unit of passenger equipment that is placed or continued in service by a railroad, the appropriate penalties set forth above are aggregated up to a maximum of $16,000 per day. However, failure to perform, with respect to a particular unit of passenger equipment, any of the inspections and tests required under subparts D and F of this part will be treated as a violation separate and distinct from, and in addition to, any substantive violative conditions found on that unit of passenger equipment. Moreover, the Administrator reserves the right to assess a penalty of up to $27,000 for any violation where circumstances warrant. *See* 49 CFR part 209, appendix A.

Failure to observe any condition for movement of defective equipment set forth in § 238.17 will deprive the railroad of the benefit of the movement-for-repair provision and make the railroad and any responsible individuals liable for penalty under the particular regulatory section(s) concerning the substantive defect(s) present on the unit of passenger equipment at the time of movement.

Failure to observe any condition for the movement of passenger equipment containing defective safety appliances, other than power brakes, set forth in § 238.17(e) will deprive the railroad of the movement-for-repair provision and make the railroad and any responsible individuals liable for penalty under the particular regulatory section(s) contained in part 231 of this chapter or § 238.429 concerning the substantive defective condition.

The penalties listed for failure to perform the exterior and interior mechanical inspections and tests required under § 238.303 and § 238.305 may be assessed for each unit of passenger equipment contained in a train that is not properly inspected. Whereas, the penalties listed for failure to perform the brake inspections and tests under § 238.313 through § 238.319 may be assessed for each train that is not properly inspected.

[2] The penalty schedule uses section numbers from 49 CFR part 238. If more than one item is listed as a type of violation of a given section, each item is also designated by a ''penalty code,'' which is used to facilitate assessment of civil penalties, and which may or may not correspond to any subsection designation(s). For convenience, penalty citations will cite the CFR section and the penalty code, if any. FRA reserves the right, should litigation become necessary, to substitute in its complaint the CFR citation in place of the combined CFR and penalty code citation, should they differ.

[64 FR 25660, May 12, 1999, as amended at 65 FR 41310, July 3, 2000; 67 FR 19994, Apr. 23, 2002; 72 FR 51198, Sept. 6, 2007; 73 FR 6413, Feb. 1, 2008]

APPENDIX B TO PART 238—TEST METHODS AND PERFORMANCE CRITERIA FOR THE FLAMMABILITY AND SMOKE EMISSION CHARACTERISTICS OF MATERIALS USED IN PASSENGER CARS AND LOCOMOTIVE CABS

This appendix contains the test methods and performance criteria for the flammability and smoke emission characteristics of materials used in passenger cars and locomotive cabs, in accordance with the requirements of § 238.103.

(a) *Incorporation by reference.* Certain documents are incorporated by reference into this appendix with the approval of the Director of the Federal Register in accordance with 5 U.S.C. 552(a) and 1 CFR part 51. You may inspect a copy of each document during normal business hours at the Federal Railroad Administration, Docket Clerk, 1120 Vermont Ave., N.W., Suite 7000 or at the National Archives and Records Administration (NARA). For information on the availability of this material at NARA, call 202–741–6030, or go to: *http://www.archives.gov/federal_register/code_of_federal_regulations/ibr_locations.html.* The documents incorporated by reference into this appendix and the sources from which you may obtain these documents are listed below:

(1) American Society for Testing and Materials (ASTM), 100 Barr Harbor Dr., West Conshohocken, PA 19428–2959.

(i) ASTM C 1166–00, Standard Test Method for Flame Propagation of Dense and Cellular Elastomeric Gaskets and Accessories.

(ii) ASTM D 2724–87, Standard Test Methods for Bonded, Fused, and Laminated Apparel Fabrics.

(iii) ASTM D 3574–95, Standard Test Methods for Flexible Cellular Materials-Slab, Bonded, and Molded Urethane Foams.

(iv) ASTM D 3675–98, Standard Test Method for Surface Flammability of Flexible Cellular Materials Using a Radiant Heat Energy Source.

(v) ASTM E 119–00a, Standard Test Methods for Fire Tests of Building Construction and Materials.

(vi) ASTM E 162–98, Standard Test Method for Surface Flammability of Materials Using a Radiant Heat Energy Source.

(vii) ASTM E 648–00, Standard Test Method for Critical Radiant Flux of Floor-Covering Systems Using a Radiant Heat Energy Source.

(viii) ASTM E 662–01, Standard Test Method for Specific Optical Density of Smoke Generated by Solid Materials.

(ix) ASTM E 1354–99, Standard Test Method for Heat and Visible Smoke Release Rates for Materials and Products Using an Oxygen Consumption Calorimeter.

(x) ASTM E 1537–99, Standard Test Method for Fire Testing of Upholstered Furniture.

(xi) ASTM E 1590–01, Standard Test Method for Fire Testing of Mattresses.

(2) General Services Administration, Federal Supply Service, Specification Section, 470 E. L'Enfant Plaza, S.W., Suite 8100, Washington, D.C., 20407. FED-STD-191A-Textile Test Method 5830, Leaching Resistance of Cloth; Standard Method (July 20, 1978).

(3) State of California, Department of Consumer Affairs, Bureau of Home Furnishings and Thermal Insulation, 3485 Orange Grove Avenue, North Highlands, CA 95660–5595.

(i) California Technical Bulletin (Cal TB) 129, Flammability Test Procedure for Mattresses for Use in Public Buildings (October, 1992).

(ii) Cal TB 133, Flammability Test Procedure for Seating Furniture for Use in Public Occupancies (January, 1991).

(b) *Definitions.* As used in this appendix—

Average heat release rate ($\dot{q}''_{180}$) means, as defined in ASTM E 1354–99, the average heat release rate per unit area in the time period beginning at the time of ignition and ending 180 seconds later.

Critical radiant flux (C.R.F.) means, as defined in ASTM E 648–00, a measure of the behavior of horizontally-mounted floor covering systems exposed to a flaming ignition source in a graded radiant heat energy environment in a test chamber.

Flame spread index (I_s) means, as defined in ASTM E 162–98, a factor derived from the rate of progress of the flame front (F_s) and the rate of heat liberation by the material under test (Q), such that $I_s = F_s \times Q$.

Flaming dripping means periodic dripping of flaming material from the site of material burning or material installation.

Flaming running means continuous flaming material leaving the site of material burning or material installation.

Heat release rate means, as defined in ASTM E 1354–99, the heat evolved from a specimen per unit of time.

Specific extinction area (σ_f) means, as defined in ASTM E 1354–99, specific extinction area for smoke.

Specific optical density (D_s) means, as defined in ASTM E 662–01, the optical density measured over unit path length within a chamber of unit volume, produced from a specimen of unit surface area, that is irradiated by a heat flux of 2.5 watts/cm^2 for a specified period of time.

Surface flammability means the rate at which flames will travel along surfaces.

(c) *Required test methods and performance criteria.* The materials used in locomotive cabs and passenger cars shall be tested according to the methods and meet the performance criteria set forth in the following table and notes:

Test Procedures and Performance Criteria for the Flammability and Smoke Emission Characteristics of Materials Used in Passenger Cars and Locomotive Cabs

CATEGORY	FUNCTION OF MATERIAL	TEST METHOD	PERFORMANCE CRITERIA
Cushions, Mattresses	All [1, 2, 3, 4, 5, 6, 7, 8]	ASTM D 3675-98	$I_s \leq 25$
		ASTM E 662-01	$D_s(1.5) \leq 100$ $D_s(4.0) \leq 175$
Fabrics	Seat upholstery, mattress ticking and covers, curtains, draperies, wall coverings, and window shades [1, 2, 3, 6, 7, 8]	14 CFR 25, Appendix F, Part I, (vertical test)	Flame time ≤ 10 seconds Burn length ≤ 6 inches
		ASTM E 662-01	$D_s(4.0) \leq 200$
Other Vehicle Components [9, 10, 11, 12]	Seat and mattress frames, wall and ceiling panels, seat and toilet shrouds, tray and other tables, partitions, shelves, opaque windscreens, end caps, roof housings, and component boxes and covers [1, 2]	ASTM E 162-98	$I_s \leq 35$
		ASTM E 662-01	$D_s(1.5) \leq 100$ $D_s(4.0) \leq 200$
	Flexible cellular foams used in armrests and seat padding [1, 2, 4, 6]	ASTM D 3675-98	$I_s \leq 25$
		ASTM E 662-01	$D_s(1.5) \leq 100$ $D_s(4.0) \leq 175$
	Thermal and acoustic insulation [1, 2]	ASTM E 162-98	$I_s \leq 25$
		ASTM E 662-01	$D_s(4.0) \leq 100$
	HVAC ducting [1, 2]	ASTM E 162-98	$I_s \leq 35$
		ASTM E 662-01	$D_s(4.0) \leq 100$
	Floor covering [12,13]	ASTM E 648-00	C.R.F. ≥ 5 kW/m^2
		ASTM E 662-01	$D_s(1.5) \leq 100$ $D_s(4.0) \leq 200$
	Light diffusers, windows and transparent plastic windscreens [2, 14]	ASTM E 162-98	$I_s \leq 100$
		ASTM E 662-01	$D_s(1.5) \leq 100$ $D_s(4.0) \leq 200$
Elastomers [1, 10, 11]	Window gaskets, door nosings, inter-car diaphragms, roof mats, and seat springs	ASTM C 1166-00	Average flame propagation ≤ 4 inches
		ASTM E 662-01	$D_s(1.5) \leq 100$ $D_s(4.0) \leq 200$
Structural Components [15]	Flooring [16], Other [17]	ASTM E 119-00a	Pass

[1] Materials tested for surface flammability shall not exhibit any flaming running or dripping.

[2] The ASTM E 662 01 maximum test limits for smoke emission (specific optical density) shall be measured in either the flaming or

[1] Materials tested for surface flammability shall not exhibit any flaming running or dripping.

[2] The ASTM E 662–01 maximum test limits for smoke emission (specific optical density) shall be measured in either the flaming or

non-flaming mode, utilizing the mode which generates the most smoke.

[3] Testing of a complete seat assembly (including cushions, fabric layers, upholstery) according to ASTM E 1537–99 using the pass/fail criteria of Cal TB 133, and testing of a complete mattress assembly (including foam and ticking) according to ASTM E 1590–01 using the pass/fail criteria of Cal TB 129 shall be permitted in lieu of the test methods prescribed herein, provided the assembly component units remain unchanged or new (replacement) assembly components possess equivalent fire performance properties to the original components tested. A fire hazard analysis must also be conducted that considers the operating environment within which the seat or mattress assembly will be used in relation to the risk of vandalism, puncture, cutting, or other acts which may expose the individual components of the assemblies to an ignition source. Notes 5, 6, 7, and 8 apply.

[4] Testing is performed without upholstery.

[5] The surface flammability and smoke emission characteristics shall be demonstrated to be permanent after dynamic testing according to ASTM D 3574–95, Test I_2 (Dynamic Fatigue Test by the Roller Shear at Constant Force) or Test I_3 (Dynamic Fatigue Test by Constant Force Pounding) both using Procedure B, except that the test samples shall be a minimum of 6 inches (154 mm) by 18 inches (457 mm) by the thickness of the material in its end use configuration, or multiples thereof. If Test I_3 is used, the size of the indentor described in paragraph 96.2 shall be modified to accommodate the specified test specimen.

[6] The surface flammability and smoke emission characteristics shall be demonstrated to be permanent by washing, if appropriate, according to FED-STD–191A Textile Test Method 5830.

[7] The surface flammability and smoke emission characteristics shall be demonstrated to be permanent by dry-cleaning, if appropriate, according to ASTM D 2724–87.

[8] Materials that cannot be washed or dry-cleaned shall be so labeled and shall meet the applicable performance criteria after being cleaned as recommended by the manufacturer.

[9] Signage is not required to meet any flammability or smoke emission performance criteria specified in this Appendix.

[10] Materials used to fabricate miscellaneous, discontinuous small parts (such as knobs, rollers, fasteners, clips, grommets, and small electrical parts) that will not contribute materially to fire growth in end use configuration are exempt from flammability and smoke emission performance requirements, provided that the surface area of any individual small part is less than 16 square inches (100 cm^2) in end use configuration and an appropriate fire hazard analysis is conducted which addresses the location and quantity of the materials used, and the vulnerability of the materials to ignition and contribution to flame spread.

[11] If the surface area of any individual small part is less than 16 square inches (100 cm^2) in end use configuration, materials used to fabricate such a part may be tested in accordance with ASTM E 1354–99 as an alternative to both (a) the ASTM E 162–98 flammability test procedure, or the appropriate flammability test procedure otherwise specified in the table, and (b) the ASTM E 662–01 smoke generation test procedure. Testing shall be at 50 kW/m^2 applied heat flux with a retainer frame. Materials tested in accordance with ASTM E 1354–99 shall meet the following performance criteria: average heat release rate ($\dot{q}''_{180}$) less than or equal to 100 kW/m^2, and average specific extinction area (σ_f) less than or equal to 500 m^2/kg over the same 180-second period.

[12] Carpeting used as a wall or ceiling covering shall be tested according to ASTM E 162–98 and ASTM E 662–01 and meet the respective criteria of I_s less than or equal to 35 and D_s (1.5) less than or equal to 100 and D_s (4.0) less than or equal to 200. Notes 1 and 2 apply.

[13] Floor covering shall be tested with padding in accordance with ASTM E 648–00, if the padding is used in the actual installation.

[14] For double window glazing, only the interior glazing is required to meet the requirements specified herein. (The exterior glazing is not required to meet these requirements.)

[15] Penetrations (ducts, etc.) shall be designed against acting as passageways for fire and smoke and representative penetrations shall be included as part of test assemblies.

[16] A structural flooring assembly separating the interior of a vehicle from its undercarriage shall meet the performance criteria during a nominal test period as determined by the railroad. The nominal test period must be twice the maximum expected time period under normal circumstances for a vehicle to stop completely and safely from its maximum operating speed, plus the time necessary to evacuate all the vehicle's occupants to a safe area. The nominal test period must not be less than 15 minutes. Only one specimen need be tested. A proportional reduction may be made in the dimensions of the specimen provided it serves to truly test the ability of the structural flooring assembly to perform as a barrier against under-vehicle fires. The fire resistance period required shall be consistent with the safe evacuation of a full load of passengers from the vehicle under worst-case conditions.

[17] Portions of the vehicle body which separate major ignition sources, energy sources, or sources of fuel-load from vehicle interiors, shall have sufficient fire endurance as determined by a fire hazard analysis acceptable to

the railroad which addresses the location and quantity of the materials used, as well as vulnerability of the materials to ignition, flame spread, and smoke generation. These portions include equipment carrying portions of a vehicle's roof and the interior structure separating the levels of a bi-level car, but do not include a flooring assembly subject to Note 16. A railroad is not required to use the ASTM E 119–00a test method.

[67 FR 42910, June 25, 2002]

APPENDIX C TO PART 238—SUSPENSION SYSTEM SAFETY PERFORMANCE STANDARDS

This appendix contains the minimum suspension system safety performance standards for Tier II passenger equipment as required by §238.427. These requirements shall be the basis for evaluating suspension system safety performance until an industry standard acceptable to FRA is developed and approved under the procedures provided in §238.21.

(a) Passenger equipment suspension systems shall be designed to limit the lateral and vertical forces and lateral to vertical (L/V) ratios, for the time duration required to travel five feet at any operating speed or over any class of track, under all operating conditions as determined by the railroad, as follows:

(1) The maximum single wheel lateral to vertical force (L/V) ratio shall not exceed Nadal's limit as follows:

$$\text{Wheel L/V} \leq \frac{\tan(\delta) - \mu}{1 + \mu \tan(\delta)}$$

where:

δ=flange angle (deg).

μ=coefficient of friction of 0.5.

(2) The net axle lateral force shall not exceed 0.5 times the static vertical axle load.

(3) The vertical wheel/rail force shall not be less than or equal to 10 percent of the static vertical wheel load.

(4) The sum of the vertical wheel loads on one side of any truck shall not be less than or equal to 20 percent of the static vertical axle load. This shall include the effect of a crosswind allowance as specified by the railroad for the intended service.

(5) The maximum truck side L/V ratio shall not exceed 0.6.

(6) When stopped on track with a uniform 6-inch superelevation, vertical wheel loads, at all wheels, shall not be less than or equal to 60 percent of the nominal vertical wheel load on level track.

(b) For purposes of this appendix, wheel/rail force measurements shall be processed through a low pass filter having a cut-off frequency of 25 Hz.

APPENDIX D TO PART 238—REQUIREMENTS FOR EXTERNAL FUEL TANKS ON TIER I LOCOMOTIVES

The requirements contained in this appendix are intended to address the structural and puncture resistance properties of the locomotive fuel tank to reduce the risk of fuel spillage to acceptable levels under derailment and minor collision conditions.

(a) *Structural strength*—(1) *Load case 1—minor derailment*. The end plate of the fuel tank shall support a sudden loading of one-half the weight of the car body at a vertical acceleration of 2g, without exceeding the ultimate strength of the material. The load is assumed to be supported on one rail, within an eight inch band (plus or minus) at a point nominally above the head of the rail, on tangent track. Consideration should be given in the design of the fuel tank to maximize the vertical clearance between the top of the rail and the bottom of the fuel tank.

(2) *Load case 2—jackknifed locomotive*. The fuel tank shall support transversely at the center a sudden loading equivalent to one half the weight of the locomotive at a vertical acceleration of 2g, without exceeding the ultimate strength of the material. The load is assumed to be supported on one rail, distributed between the longitudinal center line and the edge of the tank bottom, with a rail head surface of two inches.

(3) *Load case 3—side impact*. In a side impact collision by an 80,000 pound Gross Vehicle Weight tractor/trailer at the longitudinal center of the fuel tank, the fuel tank shall withstand, without exceeding the ultimate strength, a 200,000 pound load (2.5g) distributed over an area of six inches by forty-eight inches (half the bumper area) at a height of thirty inches above the rail (standard DOT bumper height).

(4) *Load case 4—penetration resistance*. The minimum thickness of the sides, bottom sheet and end plates of the fuel tank shall be equivalent to a 5/16-inch steel plate with a 25,000 pounds-per-square-inch yield strength (where the thickness varies inversely with the square root of yield strength). The lower one third of the end plates shall have the equivalent penetration resistance by the above method of a ¾-inch steel plate with a 25,000 pounds-per-square-inch yield strength. This may be accomplished by any combination of materials or other mechanical protection.

(b) *Sideswipe*. To minimize fuel tank damage during sideswipes (railroad vehicles and grade crossings), all drain plugs, clean-out ports, inspection covers, sight glasses, gauge openings, etc., must be flush with the tank surface or adequately protected to avoid catching foreign objects or breakage. All seams must be protected or flush to avoid catching foreign objects.

(c) *Spill controls.* Vents and fills shall be designed to avert spillage of fuel in the event of a roll over.

APPENDIX E TO PART 238—GENERAL PRINCIPLES OF RELIABILITY-BASED MAINTENANCE PROGRAMS

(a) Any maintenance program has the following four basic objectives:

(1) To ensure realization of the design level of safety and reliability of the equipment;

(2) To restore safety and reliability to their design levels when deterioration has occurred;

(3) To obtain the information necessary for design improvements of those items whose design reliability proves inadequate; and

(4) To accomplish these goals at a minimum total cost, including maintenance costs and the costs of residual failures.

(b) Reliability-based maintenance programs are based on the following general principles. A failure is an unsatisfactory condition. There are two types of failures: functional and potential. Functional failures are usually reported by operating crews. Conversely, maintenance crews usually discover potential failures. A potential failure is an identifiable physical condition, which indicates that a functional failure is imminent. The consequences of a functional failure determine the priority of a maintenance effort. These consequences fall into the following general categories:

(1) Safety consequences, involving possible loss of the equipment and its occupants;

(2) Operational consequences, which involve an indirect economic loss as well as the direct cost of repair;

(3) Non-operational consequences, which involve only the direct cost of repair; or

(4) Hidden failure consequences, which involve exposure to a possible multiple failure as a result of the undetected failure of a hidden function.

(c) In a reliability-based maintenance program, scheduled maintenance is required for any item whose loss of function or mode of failure could have safety consequences. If preventative tasks cannot reduce the risk of such failures to an acceptable level, the item requires redesign to alter its failure consequences. Scheduled maintenance is also required for any item whose functional failure will not be evident to the operating crew, and therefore reported for corrective action. In all other cases the consequences of failure are economic, and maintenance tasks directed at preventing such failures must be justified on economic grounds. All failure consequences, including economic consequences, are established by the design characteristics of the equipment and can be altered only by basic changes in the design. Safety consequences can, in nearly all cases, be reduced to economic consequences by the use of redundancy. Hidden functions can usually be made evident by instrumentation or other design features. The feasibility and cost effectiveness of scheduled maintenance depend on the inspectablility of the component, and the cost of corrective maintenance depends on its failure modes and design reliability.

(d) The design reliability of equipment or components will only be achieved with an effective maintenance program. This level of reliability is established by the design of each component and the manufacturing processes that produced it. Scheduled maintenance can ensure that design reliability of each component is achieved, but maintenance alone cannot yield a level of reliability beyond the design reliability.

(e) When a maintenance program is developed, it includes tasks that satisfy the criteria for both applicability and effectiveness. The applicability of a task is determined by the characteristics of the component or equipment to be maintained. The effectiveness is stated in terms of the consequences that the task is designed to prevent. The basics types of tasks that are performed by maintenance personnel are each applicable under a unique set of conditions. Tasks may be directed at preventing functional failures or preventing a failure event consisting of the sequential occurrence of two or more independent failures which may have consequences that would not be produced by any of the failures occurring separately. The task types include:

(1) Inspections of an item to find and correct any potential failures;

(2) Rework/remanufacture/overhaul of an item at or before some specified time or age limit;

(3) Discard of an item (or parts of it) at or before some specified life limit; and

(4) Failure finding inspections of a hidden-function item to find and correct functional failures that have already occurred but were not evident to the operating crew.

(b) Components or systems in a reliability-based maintenance program may be defined as simple or complex. A simple component or system is one that is subject to only one or a very few failure modes. This type of component or system frequently shows decreasing reliability with increasing operating age. An age/time limit may be used to reduce the overall failure rate of simple components or systems. Here, safe-life limits, fail-safe designs, or damage tolerance-based residual life calculations may be imposed on a single component or system to play a crucial role in controlling critical failures. Complex components or systems are ones whose functional failure may result from many different failure modes and show little or no decrease in overall reliability with increasing age unless there is a dominant failure mode. Therefore, age limits imposed on complex

components or systems have little or no effect on their overall failure rates.

(g) When planning the maintenance of a component or system to protect the safety and operating capability of the equipment, a number of items must be considered in the reliability assessment process:

(1) The consequences of each type of functional failure;

(2) The visibility of a functional failure to the operating crew (evidence that a failure has occurred);

(3) The visibility of reduced resistance to failure (evidence that a failure is imminent);

(4) The age-reliability characteristics of each item;

(5) The economic tradeoff between the cost of scheduled maintenance and the benefits to be derived from it;

(6) A multiple failure, resulting from a sequence of independent failures, may have consequences that would not be caused by any one of the individual failures alone. These consequences are taken into account in the definition of the failure consequences for the first failure; and

(7) A default strategy governs decision making in the absence of full information or agreement. This strategy provides for conservative initial decisions, to be revised on the basis of information derived from operating experience.

(h) A successful reliability-based maintenance program must be dynamic. Any prior-to-service program is based on limited information. As such, the operating organization must be prepared to collect and respond to real data throughout the operating life of the equipment. Management of the ongoing maintenance program requires an organized information system for surveillance and analysis of the performance of each item under actual operating conditions. This information is needed to determine the refinements and modifications to be made in the initial maintenance program (including the adjustment of task intervals) and to determine the need for product improvement. The information derived from operating experience may be considered to have the following hierarchy of importance in the reliability-based maintenance program:

(1) Failures that could affect operating safety;

(2) Failures that have operational consequences;

(3) The failure modes of units removed as a result of failures;

(4) The general condition of unfailed parts in units that have failed; and

(5) The general condition of serviceable units inspected as samples.

(i) At the time an initial maintenance program is developed, information is usually available to determine the tasks necessary to protect safety and operating capability. However, the information required to determine optimum task intervals and the applicability of age or life limits can be obtained only from age or life exploration after the equipment enters service. With any new equipment there is always the possibility of unanticipated failure modes. The first occurrence of any serious unanticipated failure should immediately set into motion the following improvement cycle:

(1) An inspection task is developed to prevent recurrences while the item is being redesigned;

(2) The operating fleet is modified to incorporate the redesigned part; and

(3) After the modification has proved successful, the special inspection task is eliminated from the maintenance program.

(j) Component improvements based on identification of the actual reliability characteristics of each item through age or life exploration, is part of the normal development cycle of all complex equipment.

PART 239—PASSENGER TRAIN EMERGENCY PREPAREDNESS

Subpart A—General

Sec.
239.1 Purpose and scope.
239.3 Application.
239.5 Preemptive effect.
239.7 Definitions.
239.9 Responsibility for compliance.
239.11 Penalties.
239.13 Waivers.
239.15 Information collection.

Subpart B—Specific Requirements

239.101 Emergency preparedness plan.
239.103 Passenger train emergency simulations.
239.105 Debriefing and critique.
239.107 Emergency exits.

Subpart C—Review, Approval, and Retention of Emergency Preparedness Plans

239.201 Emergency preparedness plan; filing and approval.
239.203 Retention of emergency preparedness plan.

Subpart D—Operational (Efficiency) Tests; Inspection of Records and Recordkeeping

239.301 Operational (efficiency) tests.
239.303 Electronic recordkeeping.

APPENDIX A TO PART 239—SCHEDULE OF CIVIL PENALTIES

AUTHORITY: 49 U.S.C. 20102–20103, 20105–20114, 20133, 21301, 21304, and 21311; 28 U.S.C. 2461, note; and 49 CFR 1.49(c), (g), (m).

SOURCE: 63 FR 24676, May 4, 1998, unless otherwise noted.

Subpart A—General

§ 239.1 Purpose and scope.

(a) The purpose of this part is to reduce the magnitude and severity of casualties in railroad operations by ensuring that railroads involved in passenger train operations can effectively and efficiently manage passenger train emergencies.

(b) This part prescribes minimum Federal safety standards for the preparation, adoption, and implementation of emergency preparedness plans by railroads connected with the operation of passenger trains, and requires each affected railroad to instruct its employees on the provisions of its plan. This part does not restrict railroads from adopting and enforcing additional or more stringent requirements not inconsistent with this part.

§ 239.3 Application.

(a) Except as provided in paragraph (b) of this section, this part applies to all:

(1) Railroads that operate intercity or commuter passenger train service on standard gage track which is part of the general railroad system of transportation;

(2) Railroads that provide commuter or other short-haul rail passenger train service in a metropolitan or suburban area (as described by 49 U.S.C. 20102(1)), including public authorities operating passenger train service; and

(3) Passenger or freight railroads hosting the operation of passenger train service described in paragraph (a)(1) or (a)(2) of this section.

(b) This part does *not* apply to:

(1) Rapid transit operations in an urban area that are not connected with the general railroad system of transportation;

(2) Operation of private cars, including business/office cars and circus trains; or

(3) Tourist, scenic, historic, or excursion operations, whether on or off the general railroad system.

§ 239.5 Preemptive effect.

Under 49 U.S.C. 20106 (formerly section 205 of the Federal Railroad Safety Act of 1970 (45 U.S.C. 434)), issuance of this part preempts any State law, rule, regulation, order, or standard covering the same subject matter, except a provision necessary to eliminate or reduce an essentially local safety hazard, that is not incompatible with Federal law or regulation and does not unreasonably burden interstate commerce.

§ 239.7 Definitions.

As used in this part—

Adjacent rail modes of transportation means other railroads, trolleys, light rail, heavy transit, and other vehicles operating on rails or electromagnetic guideways which are expressly identified in a railroad's emergency preparedness plan.

Administrator means the Administrator of the Federal Railroad Administration or the Administrator's delegate.

Control center means a central location on a railroad with responsibility for directing the safe movement of trains.

Crewmember means a person, other than a passenger, who is assigned to perform either:

(1) On-board functions connected with the movement of the train (i.e., an employee of a railroad, or of a contractor to a railroad, who is assigned to perform service subject to the Federal hours of service laws during a tour of duty) or

(2) On-board functions in a sleeping car or coach assigned to intercity service, other than food, beverage, or security service.

Division headquarters means the location designated by the railroad where a high-level operating manager (e.g., a superintendent, division manager, or equivalent), who has jurisdiction over a portion of the railroad, has an office.

Emergency or emergency situation means an unexpected event related to the operation of passenger train service involving a significant threat to the safety or health of one or more persons requiring immediate action, including:

(1) A derailment;

(2) A fatality at a grade crossing;

(3) A passenger or employee fatality, or a serious illness or injury to one or more passengers or crewmembers requiring admission to a hospital;

(4) An evacuation of a passenger train; and

(5) A security situation (e.g., a bomb threat).

Emergency preparedness plan means one or more documents focusing on preparedness and response in dealing with a passenger train emergency.

Emergency responder means a member of a police or fire department, or other organization involved with public safety charged with providing or coordinating emergency services, who responds to a passenger train emergency.

Emergency window means that segment of a side facing glazing location which has been designed to permit rapid and easy removal in an emergency situation.

FRA means the Federal Railroad Administration.

Joint operations means rail operations conducted by more than one railroad on the same track, except as necessary for the purpose of interchange, regardless of whether such operations are the result of:

(1) Contractual arrangements between the railroads;

(2) Order of a governmental agency or a court of law; or

(3) Any other legally binding directive.

Passenger train service means the transportation of persons (other than employees, contractors, or persons riding equipment to observe or monitor railroad operations) by railroad in intercity passenger service or commuter or other short-haul passenger service in a metropolitan or suburban area.

Person includes all categories of entities covered under 1 U.S.C. 1, including, but not limited to, a railroad; any manager, supervisor, official, or other employee or agent of a railroad; any owner, manufacturer, lessor, or lessee of railroad equipment, track, or facilities; any passenger; any trespasser or nontrespasser; any independent contractor providing goods or services to a railroad; any volunteer providing goods or services to a railroad; and any employee of such owner, manufacturer, lessor, lessee, or independent contractor.

Private car means a rail passenger car used to transport non-revenue passengers on an occasional contractual basis, and includes business or office cars and circus trains.

Qualified means a status attained by an employee who has successfully completed any required training for, has demonstrated proficiency in, and has been authorized by the employer to perform the duties of a particular position or function involving emergency preparedness.

Railroad means:

(1) Any form of non-highway ground transportation that runs on rails or electromagnetic guideways, including—

(i) Commuter or other short-haul rail passenger service in a metropolitan or suburban area and commuter railroad service that was operated by the Consolidated Rail Corporation on January 1, 1979, and

(ii) High speed ground transportation systems that connect metropolitan areas, without regard to whether those systems use new technologies not associated with traditional railroads, but does not include rapid transit operations in an urban area that are not connected to the general railroad system of transportation and

(2) A person that provides railroad transportation, whether directly or by contracting out operation of the railroad to another person.

Railroad officer means any supervisory employee of a railroad.

System headquarters means the location designated by the railroad as the general office for the railroad system.

§ 239.9 Responsibility for compliance.

Although the requirements of this part are stated in terms of the duty of a railroad, when any person, including a contractor to a railroad, performs any function required by this part, that person (whether or not a railroad) shall perform that function in accordance with this part.

§ 239.11 Penalties.

Any person who violates any requirement of this part or causes the violation of any such requirement is subject

to a civil penalty of at least $550 and not more than $16,000 per violation, except that: Penalties may be assessed against individuals only for willful violations, and, where a grossly negligent violation or a pattern of repeated violations has created an imminent hazard of death or injury to persons, or has caused death or injury, a penalty not to exceed $27,000 per violation may be assessed. Each day a violation continues shall constitute a separate offense. Any person who knowingly and willfully falsifies a record or report required by this part may be subject to criminal penalties under 49 U.S.C. 21311 (formerly codified in 45 U.S.C. 438(e)). Appendix A contains a schedule of civil penalty amounts used in connection with this part.

[63 FR 24676, May 4, 1998, as amended at 69 FR 30595, May 28, 2004; 72 FR 51198, Sept. 6, 2007]

§ 239.13 Waivers.

(a) Any person subject to a requirement of this part may petition the Administrator for a waiver of compliance with such requirement. The filing of such a petition does not affect that person's responsibility for compliance with that requirement while the petition is being considered.

(b) Each petition for waiver must be filed in the manner and contain the information required by part 211 of this chapter.

(c) If the Administrator finds that a waiver of compliance is in the public interest and is consistent with railroad safety, the Administrator may grant the waiver subject to any conditions the Administrator deems necessary.

§ 239.15 Information collection.

(a) The information collection requirements of this part have been reviewed by the Office of Management and Budget pursuant to the Paperwork Reduction Act of 1995 (44 U.S.C. 3507(d) *et seq.*), and have been assigned OMB control number 2130–0545.

(b) The information collection requirements are found in the following sections: §§ 239.101, 239.103, 239.105, 239.107, 239.201, 239.203, 239.301, and 239.303.

Subpart B—Specific Requirements

§ 239.101 Emergency preparedness plan.

(a) Each railroad to which this part applies shall adopt and comply with a written emergency preparedness plan approved by FRA under the procedures of § 239.201. The plan shall include the following elements and procedures for implementing each plan element.

(1) *Communication.* (i) *Initial and on-board notification.* An on-board crewmember shall quickly and accurately assess the passenger train emergency situation and then notify the control center as soon as practicable by the quickest available means. As appropriate, an on-board crewmember shall inform the passengers about the nature of the emergency and indicate what corrective countermeasures are in progress.

(ii) *Notifications by control center.* The control center shall promptly notify outside emergency responders, adjacent rail modes of transportation, and appropriate railroad officials that a passenger train emergency has occurred. Each railroad shall designate an employee responsible for maintaining current emergency telephone numbers for use in making such notifications.

(2) *Employee training and qualification.* (i) *On-board personnel.* The railroad's emergency preparedness plan shall address individual employee responsibilities and provide for initial training, as well as periodic training at least once every two calendar years thereafter, on the applicable plan provisions. As a minimum, the initial and periodic training shall include:

(A) Rail equipment familiarization;

(B) Situational awareness;

(C) Passenger evacuation;

(D) Coordination of functions; and

(E) ''Hands-on'' instruction concerning the location, function, and operation of on-board emergency equipment.

(ii) *Control center personnel.* The railroad's emergency preparedness plan shall require initial training of responsible control center personnel, as well as periodic training at least once every

two calendar years thereafter, on appropriate courses of action for each potential emergency situation. As a minimum, the initial and periodic training shall include:

(A) Dispatch territory familiarization; and

(B) Protocols governing internal communications between appropriate control center personnel whenever an imminent potential emergency situation exists.

(iii) *Initial training schedule for current employees.* The railroad's emergency preparedness plan shall provide for the completion of initial training of all on-board and control center employees who are employed by the railroad on the date that the plan is conditionally approved under § 239.201(b)(1), in accordance with the following schedule:

(A) For each railroad that provides commuter or other short-haul passenger train service and whose operations include less than 150 route miles and less than 200 million passenger miles annually, not more than one year after January 29, 1999, or not more than 90 days after commencing passenger operations, whichever is later.

(B) For each railroad that provides commuter or other short-haul passenger train service and whose operations include at least 150 route miles or at least 200 million passenger miles annually, not more than two years after January 29, 1999, or not more than 180 days after commencing passenger operations, whichever is later.

(C) For each railroad that provides intercity passenger train service, regardless of the number of route miles or passenger miles, not more than two years after January 29, 1999, or not more than 180 days after commencing passenger operations, whichever is later.

(D) For each freight railroad that hosts passenger train service, regardless of the number of route miles or passenger miles of that service, not more than one year after January 29, 1999, or not more than 90 days after the hosting begins, whichever is later.

(iv) *Initial training schedule for new employees.* The railroad's emergency preparedness plan shall provide for the completion of initial training of all on-board and control center employees who are hired by the railroad after the date on which the plan is conditionally approved under § 239.201(b)(1). Each employee shall receive initial training within 90 days after the employee's initial date of service.

(v) *Testing of on-board and control center personnel.* A railroad shall have procedures for testing a person being evaluated for qualification under the emergency preparedness plan. The types of testing selected by the railroad shall be:

(A) Designed to accurately measure an individual employee's knowledge of his or her responsibilities under the plan;

(B) Objective in nature;

(C) Administered in written form; and

(D) Conducted without reference by the person being tested to open reference books or other materials, except to the degree the person is being tested on his or her ability to use such reference books or materials.

(vi) *On-board staffing.* (A) Except as provided in paragraph (a)(2)(vi)(B), all crewmembers on board a passenger train shall be qualified to perform the functions for which they are responsible under the provisions of the applicable emergency preparedness plan.

(B) A freight train crew relieving an expired passenger train crew en route is not required to be qualified under the emergency preparedness plan, provided that at least one member of the expired passenger train crew remains on board and is available to perform excess service under the Federal hours of service laws in the event of an emergency.

(3) *Joint operations.* (i) Each railroad hosting passenger train service shall address its specific responsibilities consistent with this part.

(ii) In order to achieve an optimum level of emergency preparedness, each railroad hosting passenger train service shall communicate with each railroad that provides or operates such service and coordinate applicable portions of the emergency preparedness plan. All of the railroads involved in hosting, providing, and operating a passenger train service operation shall

jointly adopt one emergency preparedness plan that addresses each entity's specific responsibilities consistent with this part. Nothing in this paragraph shall restrict the ability of the railroads to provide for an appropriate assignment of responsibility for compliance with this part among those railroads through a joint operating agreement or other binding contract. However, the assignor shall not be relieved of responsibility for compliance with this part.

(4) *Special circumstances.* (i) *Tunnels.* When applicable, the railroad's emergency preparedness plan shall reflect readiness procedures designed to ensure passenger safety in an emergency situation occurring in a tunnel of 1,000 feet or more in length. The railroad's emergency preparedness plan shall address, as a minimum, availability of emergency lighting, access to emergency evacuation exits, benchwall readiness, ladders for detraining, effective radio or other communication between on-board crewmembers and the control center, and options for assistance from other trains.

(ii) *Other operating considerations.* When applicable, the railroad's emergency preparedness plan shall address passenger train emergency procedures involving operations on elevated structures, including drawbridges, and in electrified territory.

(iii) *Parallel operations.* When applicable, the railroad's emergency preparedness plan shall require reasonable and prudent action to coordinate emergency efforts where adjacent rail modes of transportation run parallel to either the passenger railroad or the railroad hosting passenger operations.

(5) *Liaison with emergency responders.* Each railroad to which this part applies shall establish and maintain a working relationship with the on-line emergency responders by, as a minimum:

(i) Developing and making available a training program for all on-line emergency responders who could reasonably be expected to respond during an emergency situation. The training program shall include an emphasis on access to railroad equipment, location of railroad facilities, and communications interface, and provide information to emergency responders who may not have the opportunity to participate in an emergency simulation. Each affected railroad shall either offer the training directly or provide the program information and materials to state training institutes, firefighter organizations, or police academies;

(ii) Inviting emergency responders to participate in emergency simulations; and

(iii) Distributing applicable portions of its current emergency preparedness plan at least once every three years, or whenever the railroad materially changes its plan in a manner that could reasonably be expected to affect the railroad's interface with the on-line emergency responders, whichever occurs earlier, including documentation concerning the railroad's equipment and the physical characteristics of its line, necessary maps, and the position titles and telephone numbers of relevant railroad officers to contact.

(6) *On-board emergency equipment.* (i) *General.* Each railroad's emergency preparedness plan shall state the types of emergency equipment to be kept on board and indicate their location(s) on each passenger car that is in service. Effective May 4, 1999, or not more than 120 days after commencing passenger operations, whichever is later, this equipment shall include, at a minimum:

(A) One fire extinguisher per passenger car;

(B) One pry bar per passenger car; and

(C) One flashlight per on-board crewmember.

(ii) Effective May 4, 1999, or not more than 120 days after commencing passenger operations, whichever is later, each railroad that provides intercity passenger train service shall also equip each passenger train that is in service with at least one first-aid kit accessible to crewmembers that contains, at a minimum:

(A) Two small gauze pads (at least 4×4 inches);

(B) Two large gauze pads (at least 8×10 inches);

(C) Two adhesive bandages;

(D) Two triangular bandages;

(E) One package of gauge roller bandage that is at least two inches wide;

(F) Wound cleaning agent, such as sealed moistened towelettes;

(G) One pair of scissors;

(H) One set of tweezers;

(I) One roll of adhesive tape;

(J) Two pairs of latex gloves; and

(K) One resuscitation mask.

(iii) *On-board emergency lighting.* Consistent with the requirements of part 238 of this chapter, auxiliary portable lighting (e.g., a handheld flashlight) must be accessible and provide, at a minimum:

(A) Brilliant illumination during the first 15 minutes after the onset of an emergency situation; and

(B) Continuous or intermittent illumination during the next 60 minutes after the onset of an emergency situation.

(iv) *Maintenance.* Each railroad's emergency preparedness plan shall provide for scheduled maintenance and replacement of first-aid kits, on-board emergency equipment, and on-board emergency lighting.

(7) *Passenger safety information.* (i) *General.* Each railroad's emergency preparedness plan shall provide for passenger awareness of emergency procedures, to enable passengers to respond properly during an emergency.

(ii) *Passenger awareness program activities.* Each railroad shall conspicuously and legibly post emergency instructions inside all passenger cars (e.g., on car bulkhead signs, seatback decals, or seat cards) and shall utilize one or more additional methods to provide safety awareness information including, but not limited to, one of the following:

(A) On-board announcements;

(B) Laminated wallet cards;

(C) Ticket envelopes;

(D) Timetables;

(E) Station signs or video monitors;

(F) Public service announcements; or

(G) Seat drops.

(b) [Reserved]

§ 239.103 Passenger train emergency simulations.

(a) *General.* Each railroad operating passenger train service shall conduct full-scale emergency simulations, in order to determine its capability to execute the emergency preparedness plan under the variety of scenarios that could reasonably be expected to occur on its operation, and ensure coordination with all emergency responders who voluntarily agree to participate in the emergency simulations.

(b) *Frequency of the emergency simulations.* Except as provided in paragraph (c) of this section:

(1) Each railroad that provides commuter or other short-haul passenger train service and whose operations include less than 150 route miles and less than 200 million passenger miles annually, shall conduct a minimum of one full-scale emergency simulation during every two calendar years.

(2) Each railroad that provides commuter or other short-haul passenger train service and whose operations include at least 150 route miles or at least 200 million passenger miles annually, shall conduct a minimum of one full-scale emergency simulation during each calendar year.

(3) Each railroad that provides intercity passenger train service, shall conduct a minimum of one full-scale emergency simulation during each calendar year, regardless of the number of route miles or passenger miles.

(c) *Actual emergency situations.* Neither a tabletop exercise nor the activation of its emergency preparedness plan during an actual emergency situation may be credited toward the minimum number of full-scale emergency simulations required under paragraph (b) of this section. However, a railroad that has activated its emergency preparedness plan in response to a major emergency may elect to postpone a scheduled full-scale simulation for up to 180 calendar days beyond the applicable calendar year completion date in order to evaluate the effectiveness of its plan during that major emergency and, as appropriate, modify the rescheduled simulation.

(d) *Definition.* As used in this section, *major emergency* means an unexpected event related to the operation of passenger train service that results in serious injury or death to one or more persons and property damage greater than the current reporting threshold of part 225 of this chapter to railroad on-track equipment, signals, tracks, track structures, or roadbeds, including labor

costs and the costs for acquiring new equipment and material.

§ 239.105 Debriefing and critique.

(a) *General*. Except as provided in paragraph (b) of this section, each railroad operating passenger train service shall conduct a debriefing and critique session after each passenger train emergency situation or full-scale simulation to determine the effectiveness of its emergency preparedness plan, and shall improve or amend its plan, or both, as appropriate, in accordance with the information developed. The debriefing and critique session shall be conducted within 60 days of the date of the passenger train emergency situation or full-scale simulation.

(b) *Exceptions*. (1) No debriefing and critique session shall be required in the case of an emergency situation involving only a collision between passenger railroad rolling stock and: a pedestrian; a trespasser; or a motor vehicle or other highway conveyance at a highway-rail grade crossing, provided that the collision does not result in: a passenger or employee fatality, or an injury to one or more crewmembers or passengers requiring admission to a hospital; or the evacuation of a passenger train. (2) For purposes of this section, *highway-rail grade crossing* means a location where a public highway, road, street, or private roadway, including associated sidewalks and pathways, crosses one or more railroad tracks at grade, and *trespasser* means a person who is on that part of railroad property used in railroad operation and whose presence is prohibited, forbidden, or unlawful.

(c) *Purpose of debriefing and critique*. The debriefing and critique session shall be designed to determine, at a minimum:

(1) Whether the on-board communications equipment functioned properly;

(2) How much time elapsed between the occurrence of the emergency situation or full-scale simulation and notification to the emergency responders involved;

(3) Whether the control center promptly initiated the required notifications;

(4) How quickly and effectively the emergency responders responded after notification; and

(5) How efficiently the passengers exited from the car through the emergency exits.

(d) *Records*. (1) Each railroad shall maintain records of its debriefing and critique sessions at its system headquarters and applicable division headquarters for two calendar years after the end of the calendar year to which they relate, including the following information:

(i) Date and location of the passenger train emergency situation or full-scale simulation;

(ii) Date and location of the debriefing and critique session; and

(iii) Names of all participants in the debriefing and critique session.

(2) These records shall be made available to representatives of FRA and States participating under part 212 of this chapter for inspection and copying during normal business hours.

§ 239.107 Emergency exits.

For additional requirements related to emergency window exits, see part 223 of this chapter.

(a) *Marking*. Each railroad operating passenger train service shall determine for each passenger car that is in service, except for self-propelled cars designed to carry baggage, mail, or express:

(1) That all door exits intended for emergency egress are either lighted or conspicuously and legibly marked with luminescent material on the inside of the car and that clear and understandable instructions are posted at or near such exits.

(2) That all door exits intended for emergency access by emergency responders for extrication of passengers are marked with retroreflective material and that clear and understandable instructions are posted at each such door.

(b) *Inspection, maintenance, and repair*. Consistent with the requirements of part 223 of this chapter, each railroad operating passenger train service shall:

(1) Provide for scheduled inspection, maintenance, and repair of emergency window and door exits;

(2) Test a representative sample of emergency window exits on its cars at least once every 180 days to verify that they are operating properly; and

(3) Repair each inoperative emergency window and door exit on a car before returning the car to service.

(c) *Records*. Each railroad operating passenger service shall maintain records of its inspection, maintenance, and repair of emergency window and door exits at its system headquarters and applicable division headquarters for two calendar years after the end of the calendar year to which they relate. These records shall be made available to representatives of FRA and States participating under part 212 of this chapter for inspection and copying during normal business hours.

(d) *Electronic recordkeeping*. Each railroad to which this part applies is authorized to retain by electronic recordkeeping the information prescribed in paragraph (b) of this section, provided that all of the following conditions are met:

(1) The railroad adequately limits and controls accessibility to such information retained in its database system and identifies those individuals who have such access;

(2) The railroad has a terminal at the system headquarters and at each division headquarters;

(3) Each such terminal has a desk-top computer (*i.e.*, monitor, central processing unit, and keyboard) and either a facsimile machine or a printer connected to the computer to retrieve and produce information in a usable format for immediate review by representatives of FRA and States participating under part 212 of this chapter;

(4) The railroad has a designated representative who is authorized to authenticate retrieved information from the electronic system as true and accurate copies of the electronically kept records; and

(5) The railroad provides representatives of FRA and States participating under part 212 of this chapter with immediate access to these records for inspection and copying during normal business hours and provides printouts of such records upon request.

Subpart C—Review, Approval, and Retention of Emergency Preparedness Plans

§ 239.201 Emergency preparedness plan; filing and approval.

(a) *Filing*. Each passenger railroad to which this part applies and all railroads hosting its passenger train service (if applicable) shall jointly adopt a single emergency preparedness plan for that service and the passenger railroad shall file one copy of that plan with the Associate Administrator for Safety, Federal Railroad Administration, Mail Stop 25, 400 Seventh Street, S.W., Washington, D.C. 20590, not more than 180 days after May 4, 1998, or not less than 45 days prior to commencing passenger operations, whichever is later. The emergency preparedness plan shall include the name, title, address, and telephone number of the primary person on each affected railroad to be contacted with regard to review of the plan, and shall include a summary of each railroad's analysis supporting each plan element and describing how every condition on the railroad's property that is likely to affect emergency response is addressed in the plan. Each subsequent amendment to a railroad's emergency preparedness plan shall be filed with FRA by the passenger railroad not less than 60 days prior to the proposed effective date.

(b) *Approval*—(1) *Preliminary review*. (i) Within 90 days of receipt of each proposed emergency preparedness plan, and within 45 days of receipt of each plan for passenger operations to be commenced after the initial deadline for plan submissions, FRA will conduct a preliminary review of the proposed plan to determine if the elements prescribed in § 239.101 are sufficiently addressed and discussed in the railroad's plan submission. FRA will then notify the primary contact person of each affected railroad in writing of the results of the review, whether the proposed plan has been conditionally approved by FRA, and if not conditionally approved, the specific points in which the plan is deficient.

(ii) If a proposed emergency preparedness plan is not conditionally approved by FRA, the affected railroad or railroads shall amend the proposed

plan to correct all deficiencies identified by FRA (and provide FRA with a corrected copy) not later than 30 days following receipt of FRA's written notice that the proposed plan was not conditionally approved.

(2) *Final review.* (i) Within 18 months of receipt of each proposed plan, and within 180 days of receipt of each proposed plan for passenger operations to be commenced after the initial deadline for plan submissions, FRA will conduct a comprehensive review of the conditionally approved plan to evaluate implementation of the elements included. This review will include ongoing dialogues with rail management and labor representatives, and field analysis and verification. FRA will then notify the primary contact person of each affected railroad in writing of the results of the review, whether the conditionally approved plan has been finally approved by FRA, and if not approved, the specific points in which the plan is deficient.

(ii) If an emergency preparedness plan of a railroad or railroads is not finally approved by FRA, the affected railroad or railroads shall amend the plan to correct all deficiencies (and provide FRA with a corrected copy) not later than 30 days following receipt of FRA's written notice that the plan was not finally approved.

(3) *Review of amendments.* (i) FRA will review each proposed plan amendment within 45 days of receipt. FRA will then notify the primary contact person of each affected railroad of the results of the review, whether the proposed amendment has been approved by FRA, and if not approved, the specific points in which the proposed amendment is deficient.

(ii) If the amendment is not approved, the railroad shall correct any deficiencies identified by FRA and file the corrected amendment prior to implementing the amendment.

(4) *Reopened review.* Following initial approval of a plan, or amendment, FRA may reopen consideration of the plan, or amendment, for cause stated.

§ 239.203 Retention of emergency preparedness plan.

Each passenger railroad to which this part applies, and all railroads hosting its passenger train service (if applicable), shall each retain one copy of the emergency preparedness plan required by § 239.201 and one copy of each subsequent amendment to that plan at the system and division headquarters of each, and shall make such records available to representatives of FRA and States participating under part 212 of this chapter for inspection and copying during normal business hours.

Subpart D—Operational (Efficiency) Tests; Inspection of Records and Recordkeeping

§ 239.301 Operational (efficiency) tests.

(a) Each railroad to which this part applies shall periodically conduct operational (efficiency) tests of its onboard and control center employees to determine the extent of compliance with its emergency preparedness plan.

(b) Each railroad to which this part applies shall maintain a written record of the date, time, place, and result of each operational (efficiency) test that was performed in accordance with paragraph (a) of this section. Each record shall also specify the name of the railroad officer who administered the test, the name of each employee tested, and sufficient information to identify the relevant facts relied on for evaluation purposes.

(c) Each record required by paragraph (a) of this section shall be retained at the system headquarters of the railroad and at the division headquarters for the division where the test was conducted for one calendar year after the end of the calendar year to which the test relates. Each such record shall be made available to representatives of FRA and States participating under part 212 of this chapter for inspection and copying during normal business hours.

§ 239.303 Electronic recordkeeping.

Each railroad to which this part applies is authorized to retain by electronic recordkeeping the information prescribed in § 239.301, provided that all of the following conditions are met:

(a) The railroad adequately limits and controls accessibility to such information retained in its database system and identifies those individuals who have such access;

(b) The railroad has a terminal at the system headquarters and at each division headquarters;

(c) Each such terminal has a desk-top computer (*i.e.*, monitor, central processing unit, and keyboard) and either a facsimile machine or a printer connected to the computer to retrieve and produce information in a usable format for immediate review by representatives of FRA and States participating under part 212 of this chapter;

(d) The railroad has a designated representative who is authorized to authenticate retrieved information from the electronic system as true and accurate copies of the electronically kept records; and

(e) The railroad provides representatives of FRA and States participating under part 212 of this chapter with immediate access to these records for inspection and copying during normal business hours and provides printouts of such records upon request.

APPENDIX A TO PART 239—SCHEDULE OF CIVIL PENALTIES [1]

Section	Violation	Willful violation
Subpart B—Specific Requirements:		
239.101(a) Failure of a railroad to adopt a written emergency preparedness plan	$7,500	$11,000
(a)(1) Failure of the plan to provide for:		
(i) Initial or on-board notifications by an on-board crewmember	2,500	5,000
(ii) Notification of outside emergency responders by control center	2,500	5,000
(a)(2) Failure of the plan to provide for:		
(i) Initial or periodic training of on-board personnel	2,500	5,000
(ii) Initial or periodic training of control center personnel	2,500	5,000
(iii) Completion of initial training of all on-board and control center personnel by the specified date	2,500	5,000
(iv) Completion of initial training of all newly hired on-board and control center personnel by the specified date	2,500	5,000
(v) Adequate procedures to evaluate and test on-board and control center personnel for qualification under the emergency preparedness plan	2,500	5,000
(vi) Adequate on-board staffing	2,500	5,000
(a)(3) Failure of a host railroad involved in joint operations to coordinate applicable portions of the emergency preparedness plan with the railroad or railroads providing or operating a passenger train service operation	3,000	6,000
(a)(4) Failure of the plan to address:		
(i) Readiness procedures for emergencies in tunnels	2,500	5,000
(ii) Readiness procedures for emergencies on an elevated structure or in electrified territory	2,500	5,000
(iii) Coordination efforts involving adjacent rail modes of transportation	2,500	5,000
(a)(5) Failure of the plan to address relationships with on-line emergency responders by providing for:		
(i) The development and availability of training programs	3,000	6,000
(ii) Invitations to emergency responders to participate in emergency simulations	3,000	6,000
(iii) Distribution of applicable portions of the current emergency preparedness plan	3,000	6,000
(a)(6) Failure of the plan to provide for, or the railroad to include on board each train and maintain and replace:		
(i) Emergency equipment	2,500	5,000
(ii) First-aid kits	2,500	5,000
(iii) Emergency lighting	2,500	5,000
(a)(7) Failure of the plan to provide for emergency instructions inside each passenger car or to include additional safety awareness information	3,500	7,000
239.103 Failure to conduct a required full-scale simulation in accordance with the frequency schedule	5,000	7,500
239.105 Debriefing and critique		
(a) Failure to conduct a debriefing and critique session after an emergency or full-scale simulation	4,000	7,500
(d)(1) Failure to maintain a record	2,500	5,000
(i) Failure to include date or location of the emergency or simulation	1,000	2,000
(ii) Failure to include date or location of the debriefing and critique session	1,000	2,000
(iii) Failure to include names of participants in the debriefing and critique session	1,000	2,000
(d)(2) Failure to make record available	1,000	2,000
239.107 Emergency exits		

Section	Violation	Willful violation
(a)(1), (a)(2):		
(i) Door not marked or instructions not posted	2,500	5,000
(ii) Door improperly marked or instructions 1,000-2,000-improperly posted	2,500	5,000
(b)(1) Failure to provide for scheduled inspection, maintenance, and repair of emergency windows and doors	5,000	7,500
(b)(2):		
(i) Failure to test a representative sample of emergency windows	3,000	6,000
(ii) Emergency windows tested too infrequently	1,500	3,000
(b)(3) Failure to repair an inoperative emergency window or door exit	3,500	7,000
(c):		
(i) Failure to maintain a record	2,500	5,000
(ii) Failure to make record available	1,000	2,000
(d)(1) Insufficient limits or controls on accessibility to records	2,500	5,000
(d)(2) Missing terminal	1,000	2,000
(d)(3) Inability of railroad to produce information in a usable format for immediate review	1,000	2,000
(d)(4) Failure by railroad to designate an authorized representative	1,000	2,000
(d)(5) Failure to make record available	1,000	2,000
Subpart C—Review, Approval, and Retention of Emergency Preparedness Plans:		
239.201 Filing and approval		
(a):		
(i) Failure of a railroad to file a written emergency preparedness plan	5,000	7,500
(ii) Failure to designate a primary person to contact for plan review	1,000	2,000
(iii) Failure of a railroad to file an amendment to its plan	2,500	5,000
(b)(1), (b)(2):		
(i) Failure of a railroad to correct a plan deficiency	2,500	5,000
(ii) Failure to provide FRA with a corrected copy of the plan	1,000	2,000
(b)(3):		
(i) Failure of a railroad to correct an amendment deficiency	2,500	5,000
(ii) Failure to file a corrected plan amendment with FRA	1,000	1,000
239.203 Retention of emergency preparedness plan		
(1) Failure to retain a copy of the plan or an amendment to the plan	2,500	5,000
(2) Failure to make record available	1,000	2,000
Subpart D—Operational (efficiency) tests; Inspection of Records and Recordkeeping:		
239.301 Operational (efficiency) tests		
(a) Testing Program	5,000	7,500
(b)(1) Failure to maintain a record	2,500	5,000
(b)(2) Record improperly completed	1,000	1,000
(c)(1) Failure to retain a copy of the record	2,500	5,000
(c)(2) Failure to make record available	1,000	2,000
239.303 Electronic recordkeeping		
(a) Insufficient limits or controls on accessibility to records	2,500	5,000
(b) Missing terminal	1,000	2,000
(c) Inability of railroad to produce information in a usable format for immediate review	1,000	2,000
(d) Failure by railroad to designate an authorized representative	1,000	2,000
(e) Failure to make record available	1,000	2,000

[1] A penalty may be assessed against an individual only for a willful violation. The Administrator reserves the right to assess a penalty of up to $27,000 for any violation where circumstances warrant. See 49 U.S.C. 21301, 21304, and 49 CFR part 209, appendix A. Further designations, not found in the CFR citation for certain provisions, are FRA Office of Chief Counsel computer codes added as a suffix to the CFR citation and used to expedite imposition of civil penalties for violations. FRA reserves the right, should litigation become necessary, to substitute in its complaint the CFR citation in place of the combined designation cited in the penalty demand letter.

[63 FR 24676, May 4, 1998, as amended at 69 FR 30595, May 28, 2004]

PART 240—QUALIFICATION AND CERTIFICATION OF LOCOMOTIVE ENGINEERS

Subpart A—General

Sec.
240.1 Purpose and scope.
240.3 Application and responsibility for compliance.
240.5 Preemptive effect and construction.
240.7 Definitions.
240.9 Waivers.
240.11 Penalties and consequences for noncompliance.
240.13 Information collection requirements.

Subpart B—Component Elements of the Certification Process

240.101 Certification program required.
240.103 Approval of design of individual railroad programs by FRA.
240.104 Criteria for determining whether movement of roadway maintenance equipment or a dual purpose vehicle requires a certified locomotive engineer.
240.105 Criteria for selection of designated supervisors of locomotive engineers.

240.107 Criteria for designation of classes of service.
240.109 General criteria for eligibility based on prior safety conduct.
240.111 Individual's duty to furnish data on prior safety conduct as motor vehicle operator.
240.113 Individual's duty to furnish data on prior safety conduct as an employee of a different railroad.
240.115 Criteria for consideration of prior safety conduct as a motor vehicle operator.
240.117 Criteria for consideration of operating rules compliance data.
240.119 Criteria for consideration of data on substance abuse disorders and alcohol/drug rules compliance.
240.121 Criteria for vision and hearing acuity data.
240.123 Criteria for initial and continuing education.
240.125 Criteria for testing knowledge.
240.127 Criteria for examining skill performance.
240.129 Criteria for monitoring operational performance of certified engineers.

Subpart C—Implementation of the Certification Process

240.201 Schedule for implementation.
240.203 Determinations required as a prerequisite to certification.
240.205 Procedures for determining eligibility based on prior safety conduct.
240.207 Procedures for making the determination on vision and hearing acuity.
240.209 Procedures for making the determination on knowledge.
240.211 Procedures for making the determination on performance skills.
240.213 Procedures for making the determination on completion of training program.
240.215 Retaining information supporting determinations.
240.217 Time limitations for making determinations.
240.219 Denial of certification.
240.221 Identification of qualified persons.
240.223 Criteria for the certificate.
240.225 Reliance on qualification determinations made by other railroads.
240.227 Reliance on qualification requirements of other countries.
240.229 Requirements for joint operations territory.
240.231 Requirements for locomotive engineers unfamiliar with physical characteristics in other than joint operations.

Subpart D—Administration of the Certification Programs

240.301 Replacement of certificates.
240.303 Operational monitoring requirements.
240.305 Prohibited conduct.
240.307 Revocation of certification.
240.309 Railroad oversight responsibilities.

Subpart E—Dispute Resolution Procedures

240.401 Review board established.
240.403 Petition requirements.
240.405 Processing qualification review petitions.
240.407 Request for a hearing.
240.409 Hearings.
240.411 Appeals.

APPENDIX A TO PART 240—SCHEDULE OF CIVIL PENALTIES
APPENDIX B TO PART 240—PROCEDURES FOR SUBMISSION AND APPROVAL OF LOCOMOTIVE ENGINEER QUALIFICATION PROGRAMS
APPENDIX C TO PART 240—PROCEDURES FOR OBTAINING AND EVALUATING MOTOR VEHICLE DRIVING RECORD DATA
APPENDIX D TO PART 240—IDENTIFICATION OF STATE AGENCIES THAT PERFORM NATIONAL DRIVER REGISTER CHECKS
APPENDIX E TO PART 240—RECOMMENDED PROCEDURES FOR CONDUCTING SKILL PERFORMANCE TESTS
APPENDIX F TO PART 240—MEDICAL STANDARDS GUIDELINES

AUTHORITY: 49 U.S.C. 20103, 20107, 20135, 21301, 21304, 21311; 28 U.S.C. 2461, note; and 49 CFR 1.49.

SOURCE: 56 FR 28254, June 19, 1991, unless otherwise noted.

Subpart A—General

§ 240.1 Purpose and scope.

(a) The purpose of this part is to ensure that only qualified persons operate a locomotive or train.

(b) This part prescribes minimum Federal safety standards for the eligibility, training, testing, certification and monitoring of all locomotive engineers to whom it applies. This part does not restrict a railroad from adopting and enforcing additional or more stringent requirements not inconsistent with this part.

(c) The qualifications for locomotive engineers prescribed in this part are pertinent to any person who operates a locomotive, unless that person is specifically excluded by a provision of this

part, regardless of the fact that a person may have a job classification title other than that of locomotive engineer.

[56 FR 28254, June 19, 1991, as amended at 64 FR 60988, Nov. 8, 1999]

§ 240.3 Application and responsibility for compliance.

(a) Except as provided in paragraph (b) of this section, this part applies to all railroads.

(b) This part does not apply to—

(1) A railroad that operates only on track inside an installation that is not part of the general railroad system of transportation; or

(2) Rapid transit operations in an urban area that are not connected to the general railroad system of transportation.

(c) Although the duties imposed by this part are generally stated in terms of the duty of a railroad, each person, including a contractor for a railroad, who performs any function covered by this part must perform that function in accordance with this part.

[64 FR 60988, Nov. 8, 1999]

§ 240.5 Preemptive effect and construction.

(a) Under 49 U.S.C. 20106, issuance of the regulations in this part preempts any State law, regulation, or order covering the same subject matter, except an additional or more stringent law, regulation, or order that is necessary to eliminate or reduce an essentially local safety hazard; is not incompatible with a law, regulation, or order of the United States Government; and does not impose an unreasonable burden on interstate commerce.

(b) FRA does not intend by issuance of these regulations to preempt provisions of State criminal law that impose sanctions for reckless conduct that leads to actual loss of life, injury, or damage to property, whether such provisions apply specifically to railroad employees or generally to the public at large.

(c) FRA does not intend, by use of the term *locomotive engineer* in this part, to preempt or otherwise alter the terms, conditions, or interpretation of existing collective bargaining agreements that employ other job classification titles when identifying persons authorized by a railroad to operate a locomotive.

(d) FRA does not intend by issuance of these regulations to preempt or otherwise alter the authority of a railroad to initiate disciplinary sanctions against its employees, including managers and supervisors, in the normal and customary manner, including those contained in its collective bargaining agreements.

(e) Nothing in this part shall be construed to create or prohibit an eligibility or entitlement to employment in other service for the railroad as a result of denial, suspension, or revocation of certification under this part.

(f) Nothing in this part shall be deemed to abridge any additional procedural rights or remedies not inconsistent with this part that are available to the employee under a collective bargaining agreement, the Railway Labor Act, or (with respect to employment at will) at common law with respect to removal from service or other adverse action taken as a consequence of this part.

[56 FR 28254, June 19, 1991, as amended at 58 FR 19002, Apr. 9, 1993; 64 FR 60988, Nov. 8, 1999]

§ 240.7 Definitions.

As used in this part—

Administrator means the Administrator of the Federal Railroad Administration or the Administrator's delegate.

Alcohol means ethyl alcohol (ethanol) and includes use or possession of any beverage, mixture, or preparation containing ethyl alcohol.

Controlled Substance has the meaning assigned by 21 U.S.C. 802 and includes all substances listed on Schedules I through V as they may be revised from time to time (21 CFR parts 1301–1316).

Current Employee is any employee with at least one year of experience in transportation service on a railroad.

Designated Supervisor of Locomotive Engineers is a person designated as such by a railroad in accordance with the provisions of § 240.105 of this part.

Drug means any substance (other than alcohol) that has known mind or function-altering effects on a human subject, specifically including any

psychoactive substance and including, but not limited to, controlled substances.

Dual purpose vehicle means a piece of on-track equipment that is capable of moving railroad rolling stock and may also function as roadway maintenance equipment.

EAP Counselor means a person qualified by experience, education, or training to counsel people affected by substance abuse problems and to evaluate their progress in recovering from or controlling such problems. An EAP Counselor can be a qualified full-time salaried employee of a railroad, a qualified practitioner who contracts with the railroad on a fee-for-service or other basis, or a qualified physician designated by the railroad to perform functions in connection with alcohol or substance abuse evaluation or counseling. As used in this rule, the EAP Counselor owes a duty to the railroad to make an honest and fully informed evaluation of the condition and progress of an employee.

File, filed and filing mean submission of a document under this part on the date when the Docket Clerk receives it, or if sent by mail on or after September 4, 2001, the date mailing was completed.

FRA means the Federal Railroad Administration.

FRA Representative means the Associate Administrator for Safety, FRA, and the Associate Administrator's delegate, including any safety inspector employed by the Federal Railroad Administration and any qualified state railroad safety inspector acting under part 212 of this chapter.

Instructor Engineer means a person who

(1) Is a qualified locomotive engineer under this part,

(2) Has been selected by the railroad to teach others proper train handling procedures, and

(3) Has demonstrated an adequate knowledge of the subjects under instruction.

Joint Operations means rail operations conducted by more than one railroad on the same track regardless of whether such operations are the result of—

(1) Contractual arrangement between the railroads,

(2) Order of a governmental agency or a court of law, or

(3) Any other legally binding directive.

Knowingly means having actual knowledge of the facts giving rise to the violation or that a reasonable person acting in the circumstances, exercising due care, would have had such knowledge.

Locomotive means a piece of on-track equipment (other than specialized roadway maintenance equipment or a dual purpose vehicle operating in accordance with § 240.104(a)(2)):

(1) With one or more propelling motors designed for moving other equipment;

(2) With one or more propelling motors designed to carry freight or passenger traffic or both; or

(3) Without propelling motors but with one or more control stands.

Locomotive engineer means any person who moves a locomotive or group of locomotives regardless of whether they are coupled to other rolling equipment except:

(1) A person who moves a locomotive or group of locomotives within the confines of a locomotive repair or servicing area as provided for in 49 CFR 218.5(f) and 218.29(a)(1); or

(2) A person who moves a locomotive or group of locomotives for distances of less than 100 feet and this incidental movement of a locomotive or locomotives is for inspection or maintenance purposes.

Main track means a track upon which the operation of trains is governed by one or more of the following methods of operation: timetable; mandatory directive; signal indication; or any form of absolute or manual block system.

Medical examiner means a person licensed as a doctor of medicine or doctor of osteopathy. A medical examiner can be a qualified full-time salaried employee of a railroad, a qualified practitioner who contracts with the railroad on a fee-for-service or other basis, or a qualified practitioner designated by the railroad to perform functions in connection with medical evaluations of employees. As used in this rule, the medical examiner owes a

duty to the railroad to make an honest and fully informed evaluation of the condition of an employee.

Newly hired employee is any person who is hired with no prior railroad experience, or one with less than one year of experience in transportation service on that railroad or another railroad.

Person means an entity of any type covered under 1 U.S.C. 1, including but not limited to the following: a railroad; a manager, supervisor, official, or other employee or agent of a railroad; any owner, manufacturer, lessor, or lessee of railroad equipment, track, or facilities; any independent contractor providing goods or services to a railroad; and any employee of such owner, manufacturer, lessor, lessee, or independent contractor.

Qualified means a person who has passed all appropriate training and testing programs required by the railroad and this part and who, therefore, has actual knowledge or may reasonably be expected to have knowledge of the subject on which the person is qualified.

Railroad means any form of non-highway ground transportation that runs on rails or electromagnetic guideways and any entity providing such transportation, including

(1) Commuter or other short-haul railroad passenger service in a metropolitan or suburban area and commuter railroad service that was operated by the Consolidated Rail Corporation on January 1, 1979; and

(2) High speed ground transportation systems that connect metropolitan areas, without regard to whether those systems use new technologies not associated with traditional railroads; but does not include rapid transit operations in an urban area that are not connected to the general railroad system of transportation.

Railroad Officer means any supervisory employee of a railroad.

Railroad rolling stock is on-track equipment that is either a freight car (as defined in § 215.5 of this chapter) or a passenger car (as defined in § 238.5 of this chapter).

Roadway maintenance equipment is on-track equipment powered by any means of energy other than hand power which is used in conjunction with maintenance, repair, construction or inspection of track, bridges, roadway, signal, communications, or electric traction systems.

Segment means any portion of a railroad assigned to the supervision of one superintendent or equivalent transportation officer.

Service has the meaning given in Rule 5 of the Federal Rules of Civil Procedure as amended. Similarly, the computation of time provisions in Rule 6 of the Federal Rules of Civil Procedure as amended are also applicable in this part. See also the definition of ''filing'' in this section.

Specialized roadway maintenance equipment is roadway maintenance equipment that does not have the capability to move railroad rolling stock. Any alteration of such equipment that enables it to move railroad rolling stock will require that the equipment be treated as a dual purpose vehicle.

Substance abuse disorder refers to a psychological or physical dependence on alcohol or a drug or another identifiable and treatable mental or physical disorder involving the abuse of alcohol or drugs as a primary manifestation. A substance abuse disorder is ''active'' within the meaning of this part if the person (1) is currently using alcohol and other drugs, except under medical supervision consistent with the restrictions described in § 219.103 of this chapter or (2) has failed to successfully complete primary treatment or successfully participate in aftercare as directed by an EAP Counselor.

Type I Simulator means a replica of the control compartment of a locomotive with all associated control equipment that:

(1) Functions in response to a person's manipulation and causes the gauges associated with such controls to appropriately respond to the consequences of that manipulation;

(2) Pictorially, audibly and graphically illustrates the route to be taken;

(3) Graphically, audibly, and physically illustrates the consequences of control manipulations in terms of their effect on train speed, braking capacity, and in-train force levels throughout the train; and

(4) Is computer enhanced so that it can be programmed for specific train consists and the known physical characteristics of the line illustrated.

Type II Simulator means a replica of the control equipment for a locomotive that:

(1) Functions in response to a person's manipulation and causes the gauges associated with such controls to appropriately respond to the consequences of that manipulation;

(2) Pictorially, audibly, and graphically illustrates the route to be taken;

(3) Graphically and audibly illustrates the consequences of control manipulations in terms of their effect on train speed braking capacity, and in-train force levels throughout the train; and

(4) Is computer enhanced so that it can be programmed for specific train consists and the known physical characteristics of the line illustrated.

Type III Simulator means a replica of the control equipment for a locomotive that:

(1) Functions in response to a person's manipulation and causes the gauges associated with such controls to appropriately respond to the consequences of that manipulation;

(2) Graphically illustrates the route to be taken;

(3) Graphically illustrates the consequences of control manipulations in terms of their effect on train speed braking capacity, and in-train force levels throughout the train; and

(4) Is computer enhanced so that it can be programmed for specific train consists and the known physical characteristics of the line illustrated.

[56 FR 28254, June 19, 1991, as amended at 58 FR 19002, Apr. 9, 1993; 60 FR 53136, Oct. 12, 1995; 64 FR 60989, Nov. 8, 1999; 65 FR 58483, Sept. 29, 2000; 67 FR 24, Jan. 2, 2002]

§ 240.9 Waivers.

(a) A person subject to a requirement of this part may petition the Administrator for a waiver of compliance with such requirement. The filing of such a petition does not affect that person's responsibility for compliance with that requirement while the petition is being considered.

(b) Each petition for a waiver under this section must be filed in the manner and contain the information required by part 211 of this chapter.

(c) If the Administrator finds that a waiver of compliance is in the public interest and is consistent with railroad safety, the Administrator may grant the waiver subject to any conditions the Administrator deems necessary.

[56 FR 28254, June 19, 1991, as amended at 64 FR 60989, Nov. 8, 1999]

§ 240.11 Penalties and consequences for noncompliance.

(a) A person who violates any requirement of this part or causes the violation of any such requirement is subject to a civil penalty of at least $550 and not more than $16,000 per violation, except that: Penalties may be assessed against individuals only for willful violations, and, where a grossly negligent violation or a pattern of repeated violations has created an imminent hazard of death or injury to persons, or has caused death or injury, a penalty not to exceed $27,000 per violation may be assessed. Each day a violation continues shall constitute a separate offense. See Appendix A to this part for a statement of agency civil penalty policy.

(b) A person who violates any requirement of this part or causes the violation of any such requirement may be subject to disqualification from all safety-sensitive service in accordance with part 209 of this chapter.

(c) A person who knowingly and willfully falsifies a record or report required by this part may be subject to criminal penalties under 49 U.S.C. 21311.

(d) In addition to the enforcement methods referred to in paragraphs (a), (b), and (c) of this section, FRA may also address violations of this part by use of the emergency order, compliance order, and/or injunctive provisions of the Federal Railroad Safety Act.

[56 FR 28254, June 19, 1991, as amended at 63 FR 11624, Mar. 10, 1998; 64 FR 60989, Nov. 8, 1999; 69 FR 30595, May 28, 2004; 72 FR 51198, Sept. 6, 2007]

§ 240.13 Information collection requirements.

(a) The information collection requirements of this part were reviewed

by the Office of Management and Budget pursuant to the Paperwork Reduction Act of 1980 (44 U.S.C. 3501 *et seq.*) and are assigned OMB control number 2130–0533.

(b) The information collection requirements are found in the following sections: §§ 240.101, 240.103, 240.105, 240.107, 240.109, 240.111, 240.113, 240.115, 240.117, 240.119, 240.121, 240.123, 240.125, 240.127, 240.129, 240.201, 240.205, 240.207, 240.209, 240.211, 240.213, 240.215, 240.219, 240.221, 240.223, 240.227, 240.229, 240.301, 240.303, 240.305, 240.307, 240.309, 240.401, 240.403, 240.405, 240.407, 240.411.

[56 FR 28254, June 19, 1991, as amended at 58 FR 19003, Apr. 9, 1993]

Subpart B—Component Elements of the Certification Process

§ 240.101 Certification program required.

(a) After September 17, 1991, each railroad in operation on that date and subject to this part shall have in effect a written program for certifying the qualifications of locomotive engineers.

(b) A railroad commencing operations after September 17, 1991, shall have such a program in effect prior to commencing operations.

(c) After the pertinent date specified in paragraph (e), (f), or (g) of § 240.201, each railroad shall have a certification program approved in accordance with § 240.103 that includes:

(1) A procedure for designating any person it determines to be qualified as a supervisor of locomotive engineers that complies with the criteria established in § 240.105;

(2) A designation of the classes of service that it determines will be used in compliance with the criteria established in § 240.107;

(3) A procedure for evaluating prior safety conduct that complies with the criteria established in § 240.109;

(4) A procedure for evaluating visual and hearing acuity that complies with the criteria established in § 240.121;

(5) A procedure for training that complies with the criteria established in § 240.123;

(6) A procedure for knowledge testing that complies with the criteria established in § 240.125;

(7) A procedure for skill performance testing that complies with the criteria established in § 240.127; and

(8) A procedure for monitoring operational performance that complies with the criteria established in § 240.129.

§ 240.103 Approval of design of individual railroad programs by FRA.

(a) Each railroad shall submit its written certification program and a description of how its program conforms to the specific requirements of this part in accordance with the procedures contained in appendix B to this part and shall submit this written certification program for approval at least 60 days before commencing operations.

(b) That submission shall state the railroad's election either:

(1) To accept responsibility for the training of student engineers and thereby obtain authority for that railroad to initially certify a person as an engineer in an appropriate class of service, or

(2) To recertify only engineers previously certified by other railroads.

A railroad that elects to accept responsibility for the training of student engineers shall state in its submission whether it will conduct the training program or employ a training program conducted by some other entity on its behalf but adopted and ratified by that railroad.

(c) A railroad's program is considered approved and may be implemented thirty days after the required filing date (or the actual filing date) unless the Administrator notifies the railroad in writing that the program does not conform to the criteria set forth in this part.

(1) If the Administrator determines that the program does not conform, the Administrator will inform the railroad of the specific deficiencies.

(2) If the Administrator informs the railroad of deficiencies more than 30 days after the initial filing date, the original program may remain in effect until 30 days after approval of the revised program is received.

(d) A railroad shall resubmit its program within 30 days after the date of such notice of deficiencies. A failure to

resubmit the program with the necessary revisions will be considered a failure to implement a program under this part.

(1) The Administrator will inform the railroad in writing whether its revised program conforms with this part.

(2) If the program does not conform, the railroad shall resubmit its program.

(e) A railroad that intends to materially modify its program after receiving initial FRA approval shall submit a description of how it intends to modify the program in conformity with the specific requirements of this part at least 30 days prior to implementing such a change.

(1) A modification is material if it would affect the program's conformance with this part.

(2) The modification submission shall contain a description that conforms with the pertinent portion of the procedures contained in appendix B.

(3) The modification submission will be handled in accordance with the procedures of paragraphs (c) and (d) of this section as though it were a new program.

[56 FR 28254, June 19, 1991, as amended at 64 FR 60990, Nov. 8, 1999]

§ 240.104 Criteria for determining whether movement of roadway maintenance equipment or a dual purpose vehicle requires a certified locomotive engineer.

(a) A railroad is not required to use a certified locomotive engineer to perform the following functions:

(1) Operate specialized roadway maintenance equipment; or

(2) Operate a dual purpose vehicle that is:

(i) Being operated in conjunction with roadway maintenance and related maintenance of way functions, including traveling to and from the work site;

(ii) Moving under authority of railroad operating rules designated for the movement of roadway maintenance equipment that ensure the protection of such equipment from train movements; and

(iii) Being operated by an individual trained and qualified in accordance with §§ 214.341, 214.343, and 214.355 of this chapter.

(b) A railroad is required to use a certified locomotive engineer when operating a dual purpose vehicle other than in accordance with paragraph (a)(2) of this section.

[64 FR 60990, Nov. 8, 1999]

§ 240.105 Criteria for selection of designated supervisors of locomotive engineers.

(a) Each railroad's program shall include criteria and procedures for implementing this section.

(b) The railroad shall examine any person it is considering for qualification as a supervisor of locomotive engineers to determine that he or she:

(1) Knows and understands the requirements of this part;

(2) Can appropriately test and evaluate the knowledge and skills of locomotive engineers;

(3) Has the necessary supervisory experience to prescribe appropriate remedial action for any noted deficiencies in the training, knowledge or skills of a person seeking to obtain or retain certification; and

(4) Is a certified engineer who is qualified on the physical characteristics of the portion of the railroad on which that person will perform the duties of a Designated Supervisor of Locomotive Engineers.

(c) If a railroad does not have any Designated Supervisors of Locomotive Engineers, and wishes to hire one, the chief operating officer of the railroad shall make a determination in writing that the Designated Supervisor of Locomotive Engineers designate possesses the necessary performance skills in accordance with § 240.127. This determination shall take into account any special operating characteristics which are unique to that railroad.

[56 FR 28254, June 19, 1991, as amended at 64 FR 60990, Nov. 8, 1999]

§ 240.107 Criteria for designation of classes of service.

(a) Each railroad's program shall state which of the three classes of service, provided for in paragraph (b) of this section, that it will cover.

(b) A railroad may issue certificates for any or all of the following classes of service:

(1) Train service engineers,

(2) Locomotive servicing engineers, and

(3) Student engineers.

(c) The following operational constraints apply to each class of service:

(1) Train service engineers may operate locomotives singly or in multiples and may move them with or without cars coupled to them;

(2) Locomotive servicing engineers may operate locomotives singly or in multiples but may not move them with cars coupled to them; and

(3) Student engineers may operate only under direct and immediate supervision of an instructor engineer.

(d) Each railroad is authorized to impose additional conditions or operational restrictions on the service an engineer may perform beyond those identified in this section provided those conditions or restrictions are not inconsistent with this part.

§ 240.109 General criteria for eligibility based on prior safety conduct.

(a) Each railroad's program shall include criteria and procedures to implement this section.

(b) A railroad shall evaluate the prior safety conduct of any person it is considering for qualification as a locomotive engineer and the program shall require that a person is ineligible if the person has an adverse record of prior safety conduct as provided for in § 240.115, § 240.117, or § 240.119.

(c) The program shall require evaluation of data which reflect the person's prior safety conduct as a railroad employee and the person's prior safety conduct as an operator of a motor vehicle, provided that there is relevant prior conduct. The information to be evaluated shall include:

(1) The relevant data furnished from the evaluating railroad's own records, if the person was previously an employee of that railroad;

(2) The relevant data furnished by any other railroad formerly employing the person; and

(3) The relevant data furnished by any governmental agency with pertinent motor vehicle driving records.

(d) The railroad's process for evaluating information concerning prior safety conduct shall be designed to conform wherever necessary with the procedural requirements of § 240.111, § 240.113, § 240.115, § 240.117, § 240.119, and § 240.217.

(e) When evaluating a person's motor vehicle driving record or a person's railroad employment record, a railroad shall not consider information concerning motor vehicle driving incidents or prior railroad safety conduct that

(1) Occurred prior to the effective date of this rule; or

(2) Occurred at a time other than that specifically provided for in § 240.115, § 240.117 or § 240.119 of this subpart.

(f) A railroad's program shall provide a candidate for certification or recertification a reasonable opportunity to review and comment in writing on any record which contains information concerning the person's prior safety conduct, including information pertinent to determinations required under § 240.119 of this subpart, if the railroad believes the record contains information that could be sufficient to render the person ineligible for certification under this subpart.

(g) The opportunity for comment shall be afforded to the person prior to the railroad's rendering its eligibility decision based on that information. Any responsive comment furnished shall be retained by the railroad in accordance with § 240.215 of this part.

(h) The program shall include a method for a person to advise the railroad that he or she has never been a railroad employee or obtained a license to drive a motor vehicle. Nothing in this section shall be construed as imposing a duty or requirement that a person have prior railroad employment experience or obtain a motor vehicle driver's license in order to become a certified locomotive engineer.

(i) Nothing in this section, § 240.111, or § 240.113 shall be construed to prevent persons subject to this part from entering into an agreement that results in a railroad's obtaining the information needed for compliance with this subpart in a different manner than that prescribed in § 240.111 or § 240.113.

§ 240.111 Individual's duty to furnish data on prior safety conduct as motor vehicle operator.

(a) Except for initial certifications under paragraph (b), (h), or (i) of § 240.201 or for persons covered by § 240.109(h), each person seeking certification or recertification under this part shall, within 366 days preceding the date of the railroad's decision on certification or recertification:

(1) Take the actions required by paragraphs (b) through (f) or paragraph (g) of this section to make information concerning his or her driving record available to the railroad that is considering such certification or recertification; and

(2) Take any additional actions, including providing any necessary consent required by State or Federal law to make information concerning his or her driving record available to that railroad.

(b) Each person seeking certification or recertification under this part shall:

(1) Request, in writing, that the chief of each driver licensing agency identified in paragraph (c) of this section provide a copy of that agency's available information concerning his or her driving record to the railroad that is considering such certification or recertification; and

(2) Request, in accordance with the provisions of paragraph (d) or (e) of this section, that a check of the National Driver Register be performed to identify additional information concerning his or her driving record and that any resulting information be provided to that railroad.

(c) Each person shall request the information required under paragraph (b)(1) of this section from:

(1) The chief of the driver licensing agency which last issued that person a driver's license; and

(2) The chief of the driver licensing agency of any other state or states that issued or reissued him or her a driver's license within the preceding five years.

(d) Each person shall request the information required under paragraph (b)(2) of this section from the Chief, National Driver Register, National Highway Traffic Safety Administration, 400 Seventh Street, SW., Washington, DC 20590 in accordance with the procedures contained in appendix C unless the person's motor vehicle driving license was issued by one of the driver licensing agencies identified in appendix D.

(e) If the person's motor vehicle driving license was issued by one of the driver licensing agencies identified in appendix D, the person shall request the chief of that driver licensing agency to perform a check of the National Driver Register for the possible existence of additional information concerning his or her driving record and to provide the resulting information to the railroad.

(f) If advised by the railroad that a driver licensing agency or the National Highway Traffic Safety Administration has informed the railroad that additional information concerning that person's driving history may exist in the files of a state agency not previously contacted in accordance with this section, such person shall:

(1) Request in writing that the chief of the state agency which compiled the information provide a copy of the available information to the prospective certifying railroad; and

(2) Take any additional action required by State or Federal law to obtain that additional information.

(g) Any person who has never obtained a motor vehicle driving license is not required to comply with the provisions of paragraph (b) of this section but shall notify the railroad of that fact in accordance with procedures of the railroad that comply with § 240.109(d).

(h) Each certified locomotive engineer or person seeking initial certification shall report motor vehicle incidents described in § 240.115 (b)(1) and (2) to the employing railroad within 48 hours of being convicted for, or completed state action to cancel, revoke, suspend, or deny a motor vehicle drivers license for, such violations. For the purposes of engineer certification, no railroad shall require reporting earlier than 48 hours after the conviction, or completed state action to cancel, revoke, or deny a motor vehicle drivers license.

[56 FR 28254, June 19, 1991, as amended at 64 FR 60990, Nov. 8, 1999]

§ 240.113 Individual's duty to furnish data on prior safety conduct as an employee of a different railroad.

(a) Except for initial certifications under paragraphs (b), (h), or (i) of § 240.201 or for persons covered by § 240.109(h), each person seeking certification under this part shall, within 366 days preceding the date of the railroad's decision on certification or recertification:

(1) Take the actions required by paragraph (b) of this section to make information concerning his or her prior railroad service record available to the railroad that is considering such certification or recertification; and

(2) Take any additional actions, including providing any necessary consent required by State or Federal law to make information concerning his or her service record available to that railroad.

(b) Each person seeking certification or recertification under this part shall request, in writing, that the chief operating officer or other appropriate person of the former employing railroad provide a copy of that railroad's available information concerning his or her service record to the railroad that is considering such certification or recertification.

[56 FR 28254, June 19, 1991, as amended at 64 FR 60990, Nov. 8, 1999]

§ 240.115 Criteria for consideration of prior safety conduct as a motor vehicle operator.

(a) Each railroad's program shall include criteria and procedures for implementing this section.

(b) When evaluating a person's motor vehicle driving record, a railroad shall not consider information concerning motor vehicle driving incidents that occurred more than 36 months before the month in which the railroad is making its certification decision and shall only consider information concerning the following types of motor vehicle incidents:

(1) A conviction for, or completed state action to cancel, revoke, suspend, or deny a motor vehicle drivers license for, operating a motor vehicle while under the influence of or impaired by alcohol or a controlled substance;

(2) A conviction for, or completed state action to cancel, revoke, suspend, or deny a motor vehicle driver's license for, refusal to undergo such testing as is required by State law when a law enforcement official seeks to determine whether a person is operating a vehicle while under the influence of alcohol or a controlled substance.

(c) If such an incident is identified,

(1) The railroad shall provide the data to the railroad's EAP Counselor, together with any information concerning the person's railroad service record, and shall refer the person for evaluation to determine if the person has an active substance abuse disorder;

(2) The person shall cooperate in the evaluation and shall provide any requested records of prior counseling or treatment for review exclusively by the EAP Counselor in the context of such evaluation; and

(3) If the person is evaluated as not currently affected by an active substance abuse disorder, the subject data shall not be considered further with respect to certification. However, the railroad shall, on recommendation of the EAP Counselor, condition certification upon participation in any needed aftercare and/or follow-up testing for alcohol or drugs deemed necessary by the EAP Counselor consistent with the technical standards specified in § 240.119(d)(3) of this part.

(4) If the person is evaluated as currently affected by an active substance abuse disorder, the person shall not be currently certified and the provisions of § 240.119(b) will apply.

§ 240.117 Criteria for consideration of operating rules compliance data.

(a) Each railroad's program shall include criteria and procedures for implementing this section.

(b) A person who has demonstrated a failure to comply, as described in paragraph (e) of this section, with railroad rules and practices for the safe operation of trains shall not be currently certified as a locomotive engineer.

(c)(1) A certified engineer who has demonstrated a failure to comply, as described in paragraph (e) of this section, with railroad rules and practices for the safe operation of trains shall have his or her certification revoked.

(2) A Designated Supervisor of Locomotive Engineers, a certified locomotive engineer pilot or an instructor engineer who is monitoring, piloting or instructing a locomotive engineer and fails to take appropriate action to prevent a violation of paragraph (e) of this section, shall have his or her certification revoked. Appropriate action does not mean that a supervisor, pilot or instructor must prevent a violation from occurring at all costs; the duty may be met by warning an engineer of a potential or foreseeable violation. A Designated Supervisor of Locomotive Engineers will not be held culpable under this section when this monitoring event is conducted as part of the railroad's operational compliance tests as defined in §§ 217.9 and 240.303 of this chapter.

(3) A person who is a certified locomotive engineer but is called by a railroad to perform the duty of a train crew member other than that of locomotive engineer, and is performing such other duty, shall not have his or her certification revoked based on actions taken or not taken while performing that duty.

(d) Limitations on consideration of prior operating rule compliance data. Except as provided for in paragraph (i) of this section, in determining whether a person may be or remain certified as a locomotive engineer, a railroad shall consider as operating rule compliance data only conduct described in paragraphs (e)(1) through (e)(5) of this section that occurred within a period of 36 consecutive months prior to the determination. A review of an existing certification shall be initiated promptly upon the occurrence and documentation of any conduct described in this section.

(e) A railroad shall only consider violations of its operating rules and practices that involve:

(1) Failure to control a locomotive or train in accordance with a signal indication, excluding a hand or a radio signal indication or a switch, that requires a complete stop before passing it;

(2) Failure to adhere to limitations concerning train speed when the speed at which the train was operated exceeds the maximum authorized limit by at least 10 miles per hour. Where restricted speed is in effect, railroads shall consider only those violations of the conditional clause of restricted speed rules (*i.e.*, the clause that requires stopping within one half of the locomotive engineer's range of vision), or the operational equivalent thereof, which cause reportable accidents or incidents under part 225 of this chapter, except for accidents and incidents that are classified as ''covered data'' under § 225.5 of this chapter (*i.e.*, employee injury/illness cases reportable exclusively because a physician or other licensed health care professional either made a one-time topical application of a prescription-strength medication to the employee's injury or made a written recommendation that the employee: Take one or more days away from work when the employee instead reports to work (or would have reported had he or she been scheduled) and takes no days away from work in connection with the injury or illness; work restricted duty for one or more days when the employee instead works unrestricted (or would have worked unrestricted had he or she been scheduled) and takes no other days of restricted work activity in connection with the injury or illness; or take over-the-counter medication at a dosage equal to or greater than the minimum prescription strength, whether or not the employee actually takes the medication, as instances of failure to adhere to this section;

(3) Failure to adhere to procedures for the safe use of train or engine brakes when the procedures are required for compliance with the initial terminal, intermediate terminal, or transfer train and yard test provisions of 49 CFR part 232 or when the procedures are required for compliance with the class 1, class 1A, class II, or running brake test provisions of 49 CFR part 238;

(4) Occupying main track or a segment of main track without proper authority or permission;

(5) Failure to comply with prohibitions against tampering with locomotive mounted safety devices, or knowingly operating or permitting to

be operated a train with an unauthorized disabled safety device in the controlling locomotive. (See 49 CFR part 218, subpart D and Appendix C to part 218);

(6) Incidents of noncompliance with § 219.101 of this chapter; however such incidents shall be considered as a violation only for the purposes of paragraphs (g)(2) and (3) of this section;

(f)(1) If in any single incident the person's conduct contravened more than one operating rule or practice, that event shall be treated as a single violation for the purposes of this section.

(2) A violation of one or more operating rules or practices described in paragraph (e)(1) through (e)(5) of this section that occurs during a properly conducted operational compliance test subject to the provisions of this chapter shall be counted in determining the periods of ineligibility described in paragraph (g) of this section.

(3) An operational test that is not conducted in compliance with this part, a railroad's operating rules, or a railroad's program under § 217.9 of this chapter, will not be considered a legitimate test of operational skill or knowledge, and will not be considered for certification, recertification or revocation purposes.

(g) A period of ineligibility described in this paragraph shall:

(1) Begin, for a person not currently certified, on the date of the railroad's written determination that the most recent incident has occurred; or

(2) Begin, for a person currently certified, on the date of the railroad's notification to the person that recertification has been denied or certification has been revoked; and

(3) Be determined according to the following standards:

(i) In the case of a single incident involving violation of one or more of the operating rules or practices described in paragraphs (e)(1) through (e)(5) of this section, the person shall have his or her certificate revoked for a period of one month.

(ii) In the case of two separate incidents involving a violation of one or more of the operating rules or practices described in paragraphs (e)(1) through (e)(5) of this section, that occurred within 24 months of each other, the person shall have his or her certificate revoked for a period of six months.

(iii) In the case of three separate incidents involving violations of one or more of the operating rules or practices, described in paragraphs (e)(1) through (e)(6) of this section, that occurred within 36 months of each other, the person shall have his or her certificate revoked for a period of one year.

(iv) In the case of four separate incidents involving violations of one or more of the operating rules or practices, described in paragraphs (e)(1) through (e)(6) of this section, that occurred within 36 months of each other, the person shall have his or her certificate revoked for a period of three years.

(v) Where, based on the occurrence of violations described in paragraph (e)(6) of this section, different periods of ineligibility may result under the provisions of this section and § 240.119, the longest period of revocation shall control.

(4) Be reduced to the shorter periods of ineligibility imposed by paragraphs (g)(1) through (3) of this section as amended, and effective January 7, 2000 if the incident:

(i) Occurred prior to January 7, 2000; and

(ii) Involved violations described in paragraphs (e)(1) through (e)(5) of this section; and

(iii) Did not occur within 60 months of a prior violation as described in paragraph (e)(6) of this section.

(h) Future eligibility to hold certificate. A person whose certification has been denied or revoked shall be eligible for grant or reinstatement of the certificate prior to the expiration of the initial period of revocation only if:

(1) The denial or revocation of certification in accordance with the provisions of paragraph (g)(3) of this section is for a period of one year or less;

(2) Certification was denied or revoked for reasons other than noncompliance with § 219.101 of this chapter;

(3) The person has been evaluated by a Designated Supervisor of Locomotive Engineers and determined to have received adequate remedial training;

(4) The person has successfully completed any mandatory program of

training or retraining, if that was determined to be necessary by the railroad prior to return to service; and

(5) At least one half the pertinent period of ineligibility specified in paragraph (g)(3) of this section has elapsed.

(i) In no event shall incidents that meet the criteria of paragraphs (i)(1) through (4) of this section be considered as prior incidents for the purposes of paragraph (g)(3) of this section even though such incidents could have been or were validly determined to be violations at the time they occurred. Incidents that shall not be considered under paragraph (g)(3) of this section are those that:

(1) Occurred prior to May 10, 1993;

(2) Involved violations of one or more of the following operating rules or practices:

(i) Failure to control a locomotive or train in accordance with a signal indication;

(ii) Failure to adhere to limitations concerning train speed;

(iii) Failure to adhere to procedures for the safe use of train or engine brakes; or

(iv) Entering track segment without proper authority;

(3) Were or could have been found to be violations under this section contained in the 49 CFR, parts 200 to 399, edition revised as of October 1, 1992; and

(4) Would not be a violation of paragraph (e) of this section.

(j) In no event shall incidents that meet the criteria of paragraphs (j)(1) through (2) of this section be considered as prior incidents for the purposes of paragraph (g)(3) of this section even though such incidents could have been or were validly determined to be violations at the time they occurred. Incidents that shall not be considered under paragraph (g)(3) of this section are those that:

(1) Occurred prior to January 7, 2000;

(2) Involved violations of one or more of the following operating rules or practices:

(i) Failure to control a locomotive or train in accordance with a signal indication that requires a complete stop before passing it;

(ii) Failure to adhere to limitations concerning train speed when the speed at which the train was operated exceeds the maximum authorized limit by at least 10 miles per hour or by more than one half of the authorized speed, whichever is less;

(3) Were or could have been found to be violations under this section contained in the 49 CFR, parts 200 to 399, edition revised as of October 1, 1999; and

(4) Would not be a violation of paragraph (e) of this section.

[64 FR 60990, Nov. 8, 1999, as amended at 68 FR 10139, Mar. 3, 2003]

§ 240.119 Criteria for consideration of data on substance abuse disorders and alcohol/drug rules compliance.

(a) Each railroad's program shall include criteria and procedures for implementing this section.

(b) *Fitness requirement.* (1) A person who has an active substance abuse disorder shall not be currently certified as a locomotive engineer.

(2) Except as provided in paragraph (e) of this section, a certified engineer who is determined to have an active substance abuse disorder shall be suspended from certification. Consistent with other provisions of this part, certification may be reinstated as provided in paragraph (d) of this section.

(3) In the case of a current employee of the railroad evaluated as having an active substance abuse disorder (including a person identified under the procedures of § 240.115), the employee may, if otherwise eligible, voluntarily self-refer for substance abuse counseling or treatment under the policy required by § 219.403 of this chapter; and the railroad shall then treat the substance abuse evaluation as confidential except with respect to current ineligibility for certification.

(c) *Prior alcohol/drug conduct; Federal rule compliance.* (1) In determining whether a person may be or remain certified as a locomotive engineer, a railroad shall consider conduct described in paragraph (c)(2) of this section that occurred within a period of 60 consecutive months prior to the review. A review of certification shall be initiated promptly upon the occurrence and documentation of any incident of conduct described in this paragraph.

(2) A railroad shall consider any violation of § 219.101 or § 219.102 of this chapter and any refusal or failure to provide a breath or body fluid sample for testing under the requirements of part 219 of this chapter when instructed to do so by a railroad representative.

(3) A period of ineligibility described in this paragraph shall:

(i) Begin, for a person not currently certified, on the date of the railroad's written determination that the most recent incident has occurred; or

(ii) Begin, for a person currently certified, on the date of the railroad's notification to the person that recertification has been denied or certification has been revoked; and

(4) The period of ineligibility described in this paragraph shall be determined in accordance with the following standards:

(i) In the case of a single violation of § 219.102 of this chapter, the person shall be ineligible to hold a certificate during evaluation and any required primary treatment as described in paragraph (d) of this section. In the case of two violations of § 219.102, the person shall be ineligible to hold a certificate for a period of two years. In the case of more than two such violations, the person shall be ineligible to hold a certificate for a period of five years.

(ii) In the case of one violation of § 219.102 of this chapter and one violation of § 219.101 of this chapter, the person shall be ineligible to hold a certificate for a period of three years.

(iii) In the case of one violation of § 219.101 of this chapter, the person shall be ineligible to hold a certificate for a period of 9 months (unless identification of the violation was through a qualifying ''co-worker report'' as described in § 219.405 of this chapter and the engineer waives investigation, in which case the certificate shall be deemed suspended during evaluation and any required primary treatment as described in paragraph (d)). In the case of two or more violations of § 219.101, the person shall be ineligible to hold a certificate for a period of five years.

(iv) In the case of a refusal or failure to provide a breath or body fluid sample for testing under the requirements of part 219 of this chapter when instructed to do so by a railroad representative, the refusal or failure shall be treated for purposes of ineligibility under this paragraph in the same manner as a violation of—

(A) § 219.102, in the case of a refusal or failure to provide a urine specimen for testing; or

(B) § 219.101, in the case of a refusal or failure to provide a breath sample (subpart D), or a blood specimen for mandatory post-accident toxicological testing (subpart C)).

(d) *Future eligibility to hold certificate following alcohol/drug violation*. The following requirements apply to a person who has been denied certification or who has had certification suspended or revoked as a result of conduct described in paragraph (c) of this section:

(1) The person shall not be eligible for grant or reinstatement of the certificate unless and until the person has—

(i) Been evaluated by an EAP Counselor to determine if the person currently has an active substance abuse disorder;

(ii) Successfully completed any program of counseling or treatment determined to be necessary by the EAP Counselor prior to return to service; and

(iii) Presented a urine sample for testing under Subpart H of this part that tested negative for controlled substances assayed and has tested negative for alcohol under paragraph (d)(4) of this section.

(2) An engineer placed in service or returned to service under the above-stated conditions shall continue in any program of counseling or treatment deemed necessary by the EAP Counselor and shall be subject to a reasonable program of follow-up alcohol and drug testing without prior notice for a period of not more than 60 months following return to service. Follow-up tests shall include not fewer than 6 alcohol tests and 6 drug tests during the first 12 months following return to service.

(3) Return-to-service and follow-up alcohol and drug tests shall be performed consistent with the requirements of subpart H of part 219 of this chapter.

(4) This paragraph does not create an entitlement to utilize the services of a railroad EAP Counselor, to be afforded leave from employment for counseling or treatment, or to employment as a locomotive engineer. Nor does it restrict any discretion available to the railroad to take disciplinary action based on conduct described herein.

(e) *Confidentiality protected.* Nothing in this part shall affect the responsibility of the railroad under § 219.403 of this chapter (''Voluntary Referral Policy'') to treat voluntary referrals for substance abuse counseling and treatment as confidential; and the certification status of an engineer who is successfully assisted under the procedures of that section shall not be adversely affected. However, the railroad shall include in its voluntary referral policy required to be issued pursuant to § 219.403 of this chapter a provision that, at least with respect to a certified locomotive engineer or a candidate for certification, the policy of confidentiality is waived (to the extent that the railroad shall receive from the EAP Counselor official notice of the substance abuse disorder and shall suspend or revoke the certification, as appropriate) if the person at any time refuses to cooperate in a recommended course of counseling or treatment.

[56 FR 28254, June 19, 1991, as amended at 60 FR 53136, Oct. 12, 1995; 62 FR 63467, Dec. 1, 1997]

§ 240.121 Criteria for vision and hearing acuity data.

(a) Each railroad's program shall include criteria and procedures implementing this section.

(b) Fitness requirement. In order to be currently certified as a locomotive engineer, except as permitted by paragraph (e) of this section, a person's vision and hearing shall meet or exceed the standards prescribed in this section and appendix F to this part. It is recommended that each test conducted pursuant to this section should be performed according to any directions supplied by the manufacturer of such test and any American National Standards Institute (ANSI) standards that are applicable.

(c) Except as provided in paragraph (e), each person shall have visual acuity that meets or exceeds the following thresholds:

(1) For distant viewing either

(i) Distant visual acuity of at least 20/40 (Snellen) in each eye without corrective lenses or

(ii) Distant visual acuity separately corrected to at least 20/40 (Snellen) with corrective lenses and distant binocular acuity of at least 20/40 (Snellen) in both eyes with or without corrective lenses;

(2) A field of vision of at least 70 degrees in the horizontal meridian in each eye; and

(3) The ability to recognize and distinguish between the colors of railroad signals as demonstrated by successfully completing one of the tests in appendix F to this part.

(d) Except as provided in paragraph (e) of this section, each person shall have hearing acuity that meets or exceeds the following thresholds when tested by use of an audiometric device (calibrated to American National Standard Specification for Audiometers, S3.6–1969): the person does not have an average hearing loss in the better ear greater than 40 decibels at 500Hz, 1,000 Hz, and 2,000 Hz with or without use of a hearing aid.

(e) A person not meeting the thresholds in paragraphs (c) and (d) of this section shall, upon request, be subject to further medical evaluation by a railroad's medical examiner to determine that person's ability to safely operate a locomotive. In accordance with the guidance prescribed in appendix F to this part, a person is entitled to one retest without making any showing and to another retest if the person provides evidence substantiating that circumstances have changed since the last test to the extent that the person could now arguably operate a locomotive or train safely. The railroad shall provide its medical examiner with a copy of this part, including all appendices. If, after consultation with one of the railroad's designated supervisors of locomotive engineers, the medical examiner concludes that, despite not meeting the threshold(s) in paragraphs (c) and (d) of this section, the person has the ability to safely operate a locomotive, the person may be certified as

a locomotive engineer and such certification conditioned on any special restrictions the medical examiner determines in writing to be necessary.

(f) As a condition of maintaining certification, each certified locomotive engineer shall notify his or her employing railroad's medical department or, if no such department exists, an appropriate railroad official if the person's best correctable vision or hearing has deteriorated to the extent that the person no longer meets one or more of the prescribed vision or hearing standards or requirements of this section. This notification is required prior to any subsequent operation of a locomotive or train which would require a certified locomotive engineer.

[56 FR 28254, June 19, 1991, as amended at 64 FR 60992, Nov. 8, 1999]

§ 240.123 Criteria for initial and continuing education.

(a) Each railroad's program shall include criteria and procedures for implementing this section.

(b) A railroad shall provide for the continuing education of certified locomotive engineers to ensure that each engineer maintains the necessary knowledge, skill and ability concerning personal safety, operating rules and practices, mechanical condition of equipment, methods of safe train handling (including familiarity with physical characteristics as determined by a qualified Designated Supervisor of Locomotive Engineers), and relevant Federal safety rules.

(c) A railroad that elects to train a previously untrained person to be a locomotive engineer shall provide initial training which, at a minimum:

(1) Is composed of classroom, skill performance, and familiarization with physical characteristics components;

(2) Includes both knowledge and performance skill testing;

(3) Is conducted under the supervision of a qualified class instructor;

(4) Is subdivided into segments or periods of appropriate duration to effectively cover the following subject matter areas:

(i) Personal safety,

(ii) Railroad operating rules,

(iii) Mechanical condition of equipment,

(iv) Train handling procedures (including use of locomotive and train brake systems),

(v) Familiarization with physical characteristics including train handling, and

(vi) Compliance with Federal regulations;

(5) Is conducted so that the performance skill component shall

(i) Be under the supervision of a qualified instructor engineer located in the same control compartment whenever possible;

(ii) Place the student engineer at the controls of a locomotive for a significant portion of the time; and

(iii) Permit the student to experience whatever variety of types of trains are normally operated by the railroad.

(d) Pursuant to paragraphs (b) and (c) of this section, a person may acquire familiarity with the physical characteristics of a territory through the following methods if the specific conditions included in the description of each method are met. The methods used by a railroad for familiarizing its engineers with new territory while starting up a new railroad, starting operations over newly acquired rail lines, or reopening of a long unused route, shall be described in the railroad's locomotive engineer qualification program required under this part and submitted according to the procedures described in Appendix B to this part.

(1) If ownership of a railroad is being transferred from one company to another, the engineer(s) of the acquiring company may receive familiarization training from the selling company prior to the acquiring railroad commencing operation; or

(2) Failing to obtain familiarization training from the previous owner, opening a new rail line, or reopening an unused route would require that the engineer(s) obtain familiarization through other methods. Acceptable methods of obtaining familiarization include using hyrail trips or initial lite locomotive trips in compliance with what is specified in the railroad's locomotive engineer qualification program required under this part and submitted

according to the procedures described in Appendix B to this part.

[56 FR 28254, June 19, 1991, as amended at 64 FR 60992, Nov. 8, 1999]

§ 240.125 Criteria for testing knowledge.

(a) Each railroad's program shall include criteria and procedures for implementing this section.

(b) A railroad shall have procedures for testing a person being evaluated for qualification as a locomotive engineer in either train or locomotive service to determine that the person has sufficient knowledge of the railroad's rules and practices for the safe operation of trains.

(c) The testing methods selected by the railroad shall be:

(1) Designed to examine a person's knowledge of the railroad's rules and practices for the safe operation of trains;

(2) Objective in nature;

(3) Administered in written form;

(4) Cover the following subjects:

(i) Personal safety practices;

(ii) Operating practices;

(iii) Equipment inspection practices;

(iv) Train handling practices including familiarity with the physical characteristics of the territory; and

(v) Compliance with Federal safety rules;

(5) Sufficient to accurately measure the person's knowledge of the covered subjects; and

(6) Conducted without open reference books or other materials except to the degree the person is being tested on his or her ability to use such reference books or materials.

(d) The conduct of the test shall be documented in writing and the documentation shall contain sufficient information to identify the relevant facts relied on for evaluation purposes.

§ 240.127 Criteria for examining skill performance.

(a) Each railroad's program shall include criteria and procedures for implementing this section.

(b) A railroad shall have procedures for examining the performance skills of a person being evaluated for qualification as a locomotive engineer in either train or locomotive service to determine whether the person has the skills to safely operate locomotives and/or trains, including the proper application of the railroad's rules and practices for the safe operation of locomotives or trains, in the most demanding class or type of service that the person will be permitted to perform.

(c) The testing procedures selected by the railroad shall be:

(1) Designed to examine a person's skills in safely operating locomotives or trains including the proper application of the railroad's rules and practices for the safe operation of locomotives or trains when performing the most demanding class or type of service that the person will be permitted to perform;

(2) Conducted by a Designated Supervisor of Locomotive Engineers, who does not need to be qualified on the physical characteristics of the territory over which the test will be conducted;

(3) Cover the following subjects during the test period

(i) Operating practices;

(ii) Equipment inspection practices;

(iii) Train handling practices; and

(iv) Compliance with Federal safety rules;

(4) Be of sufficient length to effectively evaluate the person's ability to operate trains; and

(5) Conducted when the person either

(i) Is at the controls of the type of train normally operated on that railroad or segment of railroad and which this person might be permitted or required by the railroad to operate in the normal course of events after certification or

(ii) Is at the controls of a Type I or Type II simulator programmed to replicate the responsive behavior of the type of train normally operated on that railroad or segment of railroad and which this person might be permitted or required by the railroad to operate in the normal course of events after certification.

(d) The conduct of the test shall be documented in writing by the designated supervisor and the documentation shall contain:

(1) The relevant facts concerning the train being operated;

(2) The constraints applicable to its operation; and

(3) The factors observed and relied on for evaluation purposes by the designated supervisor.

[56 FR 28254, June 19, 1991, as amended at 64 FR 60992, Nov. 8, 1999]

§ 240.129 Criteria for monitoring operational performance of certified engineers.

(a) Each railroad's program shall include criteria and procedures for implementing this section.

(b) A railroad shall have procedures for monitoring the operational performance of those it has determined as qualified as a locomotive engineer in either train or locomotive service.

(c) The procedures shall:

(1) Be designed to determine that the person possesses and routinely employs the skills to safely operate locomotives and/or trains, including the proper application of the railroad's rules and practices for the safe operation of locomotives and trains;

(2) Be designed so that each engineer shall be annually monitored by a Designated Supervisor of Locomotive Engineers, who does not need to be qualified on the physical characteristics of the territory over which the operational performance monitoring will be conducted;

(3) Be designed so that the locomotive engineer is either accompanied by the designated supervisor for a reasonable length of time or has his or her train handling activities electronically recorded by a train operations event recorder;

(d) The procedures may be designed so that the locomotive engineer being monitored either (i) is at the controls of the type of train normally operated on that railroad or segment of railroad and which this person might be permitted or required by the railroad to operate in the normal course of events after certification or (ii) is at the controls of a Type I or Type II simulator programmed to replicate the responsive behavior of the type of train normally operated on that railroad or segment of railroad and which this person might be permitted or required by the railroad to operate in the normal course of events after certification.

(e) The testing and examination procedures selected by the railroad for the conduct of a monitoring program shall be:

(1) Designed so that each locomotive engineer shall be given at least one unannounced test each calendar year.

(2) Designed to test engineer compliance with provisions of the railroad's operating rules that require response to signals that display less than a ''clear'' aspect, if the railroad operates with a signal system that must comply with part 236 of this chapter;

(3) Designed to test engineer compliance with provisions of the railroad's operating rules, timetable or other mandatory directives that require affirmative response by the locomotive engineer to less favorable conditions than that which existed prior to initiation of the test;

(4) Designed to test engineer compliance with provisions of the railroad's operating rules, timetable or other mandatory directives violation of which by engineers were cited by the railroad as the cause of train accidents or train incidents in accident reports filed in compliance with part 225 of this chapter in the preceding calendar year;

(5) Designed so that the administration of these tests is effectively distributed throughout whatever portion of a 24-hour day that the railroad conducts its operations; and

(6) Designed so that individual tests are administered without prior notice to the engineer being tested.

[56 FR 28254, June 19, 1991, as amended at 64 FR 60992, Nov. 8, 1999]

Subpart C—Implementation of the Certification Process

§ 240.201 Schedule for implementation.

(a) After October 30, 1991, each railroad in operation on that date shall designate in writing any person(s) it deems qualified as a designated supervisor of locomotive engineers. Each person so designated shall have demonstrated to the railroad through training, testing or prior experience that he or she has the knowledge, skills, and ability to be a designated supervisor of locomotive engineers.

(b) No later than November 1, 1991, each railroad shall designate in writing all persons that it will deem to be qualified as certified locomotive engineers for the purpose of initial compliance with paragraph (d) of this section, except as provided for in paragraph (h) of this section.

(1) Each person so designated shall have demonstrated to the railroad through training, testing or prior experience that he or she has the knowledge and skills to be a certified locomotive engineer.

(2) Each railroad shall issue, no later than December 31, 1991, a certificate that complies with § 240.223 to each person that it designates as qualified under the provisions of paragraph (b) of this section.

(c) No railroad shall permit or require a person, designated as qualified for certification under the provisions of paragraph (b) of this section, to perform service as a certified locomotive or train service engineer for more than the 36-month period beginning on the pertinent date for compliance with the mandatory procedures for testing and evaluation set forth in the applicable provisions of paragraph (e), (f) or (g) of this section unless that person has been determined to be qualified in accordance with procedures that comply with subpart C.

(d) After December 31, 1991, no railroad shall permit or require any person to operate a locomotive in any class of locomotive or train service unless that person has been certified as a qualified locomotive engineer and issued a certificate that complies with § 240.223.

(e) After December 31, 1991, no Class I railroad (including the National Railroad Passenger Corporation) or railroad providing commuter service shall designate any person it deems qualified as a designated supervisor of locomotive engineers or initially certify or recertify a person as a locomotive engineer in either locomotive or train service unless that person has been tested, evaluated, and determined to be qualified in accordance with procedures that comply with subpart C.

(f) After May 31, 1992 no Class II railroad shall designate any person it deems qualified as a designated supervisor of locomotive engineers or initially certify or recertify a person as a locomotive engineer in any class of locomotive or train service unless that person has been tested, evaluated and determined to be qualified in accordance with procedures that comply with subpart C.

(g) After November 30, 1992 no Class III railroad (including a switching and terminal or other railroad not otherwise classified) shall designate any person it deems qualified as a designated supervisor of locomotive engineers or initially certify or recertify a person as a locomotive engineer in any class of locomotive or train service unless that person has been tested, evaluated and determined to be qualified in accordance with procedures that comply with subpart C.

(h) A railroad may continue to designate any person it deems qualified as a designated supervisor of locomotive engineers or as a certified engineer, on the basis of paragraph (b) determinations, prior to the pertinent date by which a railroad of its class must comply with the procedures for testing and evaluating persons required under subpart C. Each person designated as a locomotive engineer shall be issued a certificate that complies with § 240.223 prior to being required or permitted to operate a locomotive.

(i) A railroad commencing operations prior to the pertinent date for compliance by a railroad of its class may designate any person it deems qualified as a designated supervisor of locomotive engineers or as a certified locomotive engineer on the basis of paragraph (b) until the pertinent date for compliance with the procedures for testing and evaluating required under subpart C. Each person designated as a locomotive engineer shall be issued a certificate that complies with § 240.223 prior to being required or permitted to operate a locomotive.

§ 240.203 Determinations required as a prerequisite to certification.

(a) Except as provided in paragraph (c), after the pertinent date specified in paragraph (e), (f), or (g) of § 240.201, each railroad, prior to initially certifying or recertifying any person as an engineer for any class of service, shall,

in accordance with its FRA-approved program determine in writing that:

(1) The individual meets the eligibility requirements of §§ 240.115, 240.117 and 240.119; and

(2) The individual meets the vision and hearing acuity standards of § 240.121;

(3) The individual has the necessary knowledge, as demonstrated by successfully completing a test that meets the requirements of § 240.125;

(4) The individual has the necessary applied knowledge and operating performance skills, as demonstrated by successfully completing an operational performance test that meets the requirements of § 240.127; and

(5) Where a person has not previously been certified, that the person has completed a training program that meets the requirements of § 240.123.

(b) A railroad may certify a person as a student engineer after determining that the person meets the vision and hearing acuity standards of § 240.121. A railroad may subsequently certify that student engineer as either a locomotive servicing engineer or a train service engineer without further review of his or her acuity status provided it determines that:

(1) The person successfully completed a training program that complies with § 240.123;

(2) The person meets the eligibility requirements of §§ 240.109 and 240.119; and

(3) A period of not more than twenty-four months has elapsed since the student engineer certification was issued.

[56 FR 28254, June 19, 1991, as amended at 60 FR 53136, Oct. 12, 1995]

§ 240.205 Procedures for determining eligibility based on prior safety conduct.

(a) After the pertinent date specified in paragraph (e), (f), or (g) of § 240.201, each railroad, prior to initially certifying or recertifying any person as an engineer for any class of service, shall determine that the person meets the eligibility requirements of § 240.115 involving prior conduct as a motor vehicle operator, § 240.117 involving prior conduct as a railroad worker, and § 240.119 involving substance abuse disorders and alcohol/drug rules compliance.

(b) In order to make the determination required under paragraph (a) of this section, a railroad shall have on file documents pertinent to the determinations referred to in paragraph (a) of this section, including a written document from its EAP Counselor either a document reflecting his or her professional opinion that the person has been evaluated as not currently affected by a substance abuse disorder or that the person has been evaluated as affected by an active substance abuse disorder and is ineligible for certification.

§ 240.207 Procedures for making the determination on vision and hearing acuity.

(a) After the pertinent date specified in paragraph (e), (f), or (g) of § 240.201, each railroad, prior to initially certifying or recertifying any person as an engineer for any class of service, shall determine that the person meets the standards for visual acuity and hearing acuity prescribed in § 240.121.

(b) In order to make the determination required under paragraph (a), a railroad shall have on file either:

(1) A medical examiner's certificate that the individual has been medically examined and meets these acuity standards; or

(2) A written document from its medical examiner documenting his or her professional opinion that the person does not meet one or both acuity standards and stating the basis for his or her determination that

(i) The person can nevertheless be certified under certain conditions or

(ii) The person's acuity is such that he or she cannot safely operate a locomotive even with conditions attached.

(c) Any examination required for compliance with this section shall be performed by or under the supervision of a medical examiner or a licensed physician's assistant such that:

(1) A licensed optometrist or a technician responsible to that person may perform the portion of the examination that pertains to visual acuity; and

(2) A licensed or certified audiologist or a technician responsible to that person may perform the portion of the examination that pertains to hearing acuity.

(d) If the examination required under this section discloses that the person needs corrective lenses or a hearing aid, or both, either to meet the threshold acuity levels established in § 240.121 or to meet a lower threshold determined by the railroad's medical examiner to be sufficient to safely operate a locomotive or train on that railroad, that fact shall be noted on the certificate issued in accordance with the provisions of this part.

(e) Any person with such a certificate notation shall use the relevant corrective device(s) while operating a locomotive in locomotive or train service unless the railroad's medical examiner subsequently determines in writing that the person can safely operate without using the device.

§ 240.209 Procedures for making the determination on knowledge.

(a) After the pertinent date specified in paragraph (e), (f), or (g) of § 240.201, each railroad, prior to initially certifying or recertifying any person as an engineer for any class of train or locomotive service, shall determine that the person has, in accordance with the requirements of § 240.125 of this part, demonstrated sufficient knowledge of the railroad's rules and practices for the safe operation of trains.

(b) In order to make the determination required by paragraph (a) a railroad shall have written documentation showing that the person either

(i) Exhibited his or her knowledge by achieving a passing grade in testing that complies with this part or

(ii) Did not achieve a passing grade in such testing.

(c) If a person fails to achieve a passing score under the testing procedures required by this part no railroad shall permit or require that person to operate a locomotive as a locomotive or train service engineer prior to that person's achieving a passing score during a reexamination of his or her knowledge.

§ 240.211 Procedures for making the determination on performance skills.

(a) After the pertinent date specified in paragraph (e), (f), or (g) of § 240.201, each railroad, prior to initially certifying or recertifying any person as an engineer for any class of train or locomotive service, shall determine that the person has demonstrated, in accordance with the requirements of § 240.127 of this part, the skills to safely operate locomotives or locomotives and trains, including the proper application of the railroad's rules and practices for the safe operation of locomotives or trains, in the most demanding class or type of service that the person will be permitted to perform.

(b) In order to make this determination, a railroad shall have written documentation showing the person either

(i) Exhibited his or her knowledge by achieving a passing grade in testing that complies with this part or

(ii) Did not achieve a passing grade in such testing.

(c) If a person fails to achieve a passing score under the testing and evaluation procedures required by this part, no railroad shall permit or require that person to operate a locomotive as a locomotive or train service engineer prior to that person's achieving a passing score during a reexamination of his or her performance skills.

(d) No railroad shall permit a designated supervisor of locomotive engineers to test, examine or evaluate his or her own performance skills when complying with this section.

§ 240.213 Procedures for making the determination on completion of training program.

(a) After the pertinent date specified in paragraph (e), (f), or (g) of § 240.201, each railroad, prior to the initial issuance of a certificate to any person as a train or locomotive service engineer, shall determine that the person has, in accordance with the requirements of § 240.123 of this part, the knowledge and skills to safely operate a locomotive or train in the most demanding class or type of service that the person will be permitted to perform.

(b) In making this determination, a railroad shall have written documentation showing that:

(1) The person completed a training program that complies with § 240.123 of this part;

(2) The person demonstrated his or her knowledge and skills by achieving a passing grade under the testing and evaluation procedures of that training program; and

(3) A qualified Designated Supervisor of Locomotive Engineers has determined that the person is familiar with the physical characteristics of the railroad or its pertinent segments.

[56 FR 28254, June 19, 1991, as amended at 64 FR 60992, Nov. 8, 1999]

§ 240.215 Retaining information supporting determinations.

(a) After the pertinent date in paragraphs (e), (f) or (g) of § 240.201, a railroad that issues, denies, or revokes a certificate after making the determinations required under § 240.203 shall maintain a record for each certified engineer or applicant for certification that contains the information the railroad relied on in making the determinations.

(b) The information concerning eligibility that the railroad shall retain includes:

(1) Any relevant data from the railroad's records concerning the person's prior safety conduct;

(2) Any relevant data furnished by another railroad;

(3) Any relevant data furnished by a governmental agency concerning the person's motor vehicle driving record; and

(4) Any relevant data furnished by the person seeking certification concerning his or her eligibility.

(c) The information concerning vision and hearing acuity that the railroad shall retain includes:

(1) The relevant test results data concerning acuity; and,

(2) If applicable, the relevant data concerning the professional opinion of the railroad's medical examiner on the adequacy of the person's acuity.

(d) The information concerning demonstrated knowledge that the railroad shall retain includes:

(1) Any relevant data from the railroad's records concerning the person's success or failure of the passage of knowledge test(s); and

(2) A sample copy of the written knowledge test or tests administered.

(e) The information concerning demonstrated performance skills that the railroad shall retain includes:

(1) The relevant data from the railroad's records concerning the person's success or failure on the performance skills test(s) that documents the relevant operating facts on which the evaluation is based including the observations and evaluation of the designated supervisor of locomotive engineers;

(2) If a railroad relies on the use of a locomotive operations simulator to conduct the performance skills testing required under this part, the relevant data from the railroad's records concerning the person's success or failure on the performance skills test(s) that documents the relevant operating facts on which the determination was based including the observations and evaluation of the designated supervisor of locomotive engineers; and;

(3) The relevant data from the railroad's records concerning the person's success or failure on tests the railroad performed to monitor the engineer's operating performance in accordance with § 240.129.

(f) If a railroad is relying on successful completion of an approved training program conducted by another entity, the relying railroad shall maintain a record for each certified engineer that contains the relevant data furnished by the training entity concerning the person's demonstration of knowledge and performance skills and relied on by the railroad in making its determinations.

(g) If a railroad is relying on a certification decision initially made by another railroad, the relying railroad shall maintain a record for each certified engineer that contains the relevant data furnished by the other railroad which it relied on in making its determinations.

(h) All records required under this section shall be retained for a period of six years from the date of the certification, recertification, denial or revocation decision and shall be made

available to FRA representatives upon request during normal business hours.

(i) It shall be unlawful for any railroad to knowingly or any individual to willfully:

(1) Make, cause to be made, or participate in the making of a false entry on the record(s) required by this section; or

(2) Otherwise falsify such records through material misstatement, omission, or mutilation.

(j) Nothing in this section precludes a railroad from maintaining the information required to be retained under this section in an electronic format provided that:

(1) The railroad adequately limits and controls those who have access to such information;

(2) The railroad employs a system for data storage that permits reasonable access and retrieval of the information in usable format when requested to furnish data by FRA representatives; and

(3) Information retrieved from the system can be easily produced in a printed format which can be readily provided to FRA representatives and authenticated by a designated representative of the railroad as a true and accurate copy of the railroad's records if requested to do so by FRA representatives.

[56 FR 28254, June 19, 1991, as amended at 58 FR 19003, Apr. 9, 1993]

§ 240.217 Time limitations for making determinations.

(a) After the pertinent date in paragraph (e), (f) or (g) of § 240.201, a railroad shall not certify or recertify a person as a qualified locomotive engineer in any class of train or engine service, if the railroad is making:

(1) A determination concerning eligibility and the eligibility data being relied on were furnished more than 366 days before the date of the railroad's certification decision;

(2) A determination concerning visual and hearing acuity and the medical examination being relied on was conducted more than 366 days before the date of the railroad's recertification decision;

(3) A determination concerning demonstrated knowledge and the knowledge examination being relied on was conducted more than 366 days before the date of the railroad's certification decision; or

(4) A determination concerning demonstrated performance skills and the performance skill testing being relied on was conducted more than 366 days before the date of the railroad's certification decision;

(b) The time limitations of paragraph (a) of this section do not apply to a railroad that is making a certification decision in reliance on determinations made by another railroad in accordance with paragraph (c)(2) of this section, § 240.227, or § 240.229.

(c) Except as provided in § 240.201 concerning implementation dates for initial certification decisions and paragraph (b) of this section, no railroad shall:

(1) Certify a person as a qualified locomotive engineer for an interval of more than 36 months; or

(2) Rely on a certification issued by another railroad that is more than 36 months old.

(d) Except as provided for in § 240.201 concerning initial implementation of the program, a railroad shall issue each person designated as a certified locomotive engineer a certificate that complies with § 240.223 no later than 30 days from the date of its decision to certify or recertify that person.

[56 FR 28254, June 19, 1991, as amended at 58 FR 19003, Apr. 9, 1993; 60 FR 53137, Oct. 12, 1995; 64 FR 60992, Nov. 8, 1999]

§ 240.219 Denial of certification.

(a) A railroad shall notify a candidate for certification or recertification of information known to the railroad that forms the basis for denying the person certification and provide the person a reasonable opportunity to explain or rebut that adverse information in writing prior to denying certification.

(b) This section does not require further opportunity to comment if the railroad's denial is based solely on factors addressed by §§ 240.115, 240.117, and 240.119 and the opportunity to comment afforded by those sections has been provided.

(c) If it denies a person certification or recertification, a railroad shall notify the person of the adverse decision

and explain, in writing, the basis for its denial decision. The document explaining the basis for the denial shall be mailed or delivered to the person within 10 days after the railroad's decision and shall give the date of the decision.

§ 240.221 Identification of qualified persons.

(a) After November 1, 1991, a railroad shall maintain a written record identifying each person designated by it as a supervisor of locomotive engineers.

(b) After November 1, 1991, a railroad shall maintain a written record identifying each person designated as a certified locomotive engineer. That listing of certified engineers shall indicate the class of service the railroad determines each person is qualified to perform and date of the railroad's certification decision.

(c) If a railroad is responsible for controlling joint operations territory, the listing shall include person(s) certified in accordance with § 240.229.

(d) The listing required by paragraphs (a), (b), and (c) shall be updated at least annually.

(e) The record required under this section shall be kept at the divisional or regional headquarters of the railroad and shall be available for inspection or copying by FRA during regular business hours.

(f) A railroad may obtain approval from FRA to maintain this record electronically or maintain this record at the railroad's general offices, or both. Requests for such approval shall be filed in writing with the Associate Administrator for Safety and contain sufficient information to explain how FRA will be given access to the data that is fully equivalent to that created by compliance with paragraph (e).

§ 240.223 Criteria for the certificate.

(a) As a minimum, each certificate issued in compliance with this part shall:

(1) Identify the railroad or parent company that is issuing it;

(2) Indicate that the railroad, acting in conformity with this part, has determined that the person to whom it is being issued has been determined to be qualified to operate a locomotive;

(3) Identify the person to whom it is being issued (including the person's name, date of birth and employee identification number, and either a physical description or photograph of the person);

(4) Identify any conditions or limitations, including the class of service or conditions to ameliorate vision or hearing acuity deficiencies, that restrict the person's operational authority;

(5) Show the date of its issuance;

(6) Be signed by a supervisor of locomotive engineers or other individual designated in accordance with paragraph (b) of this section;

(7) Show the date of the person's last operational monitoring event as required by § 240.129(c) and § 240.303(b), unless that information is reflected on supplementary documents which the locomotive engineer has in his or her possession when operating a locomotive; and

(8) Be of sufficiently small size to permit being carried in an ordinary pocket wallet.

(b) Each railroad to which this part applies shall designate in writing any person, other than a supervisor of locomotive engineers, that it authorizes to sign the certificates described in this section. The designation can identify such persons by name or job title.

(c) Nothing in paragraph (a) of this section shall prohibit any railroad from including additional information on the certificate or supplementing the certificate through other documents.

(d) It shall be unlawful for any railroad to knowingly or any individual to willfully:

(1) Make, cause to be made, or participate in the making of a false entry on that certificate; or

(2) Otherwise falsify that certificate through material misstatement, omission, or mutilation.

[56 FR 28254, June 19, 1991, as amended at 58 FR 19003, Apr. 9, 1993; 64 FR 60993, Nov. 8, 1999]

§ 240.225 Reliance on qualification determinations made by other railroads.

(a) After December 31, 1991, a railroad that is considering certification of a person as a qualified engineer may rely

on determinations made by another railroad concerning that person's qualifications. The railroad's certification program shall address how the railroad will administer the training of previously uncertified engineers with extensive operating experience or previously certified engineers who have had their certification expire. If a railroad's certification program fails to specify how to train a previously certified engineer hired from another railroad, then the railroad shall require the newly hired engineer to take the hiring railroad's entire training program. A railroad relying on another's certification shall determine that:

(1) The prior certification is still valid in accordance with the provisions of §§ 240.201, 240.217, and 240.307;

(2) The prior certification was for the same classification of locomotive or train service as the certification being issued under this section;

(3) The person has received training on and visually observed the physical characteristics of the new territory in accordance with § 240.123;

(4) The person has demonstrated the necessary knowledge concerning the railroad's operating rules in accordance with § 240.125;

(5) The person has demonstrated the necessary performance skills concerning the railroad's operating rules in accordance with § 240.127.

(b) [Reserved]

[64 FR 60993, Nov. 8, 1999]

§ 240.227 Reliance on qualification requirements of other countries.

(a) A railroad that conducts joint operations with a Canadian railroad may certify, for the purposes of compliance with this part, that a person is qualified to be a locomotive or train service engineer provided it determines that:

(1) The person is employed by the Canadian railroad; and

(2) The person meets or exceeds the qualifications standards issued by Transport Canada for such service.

(b) Any Canadian railroad that is required to comply with this regulation may certify that a person is qualified to be a locomotive or train service engineer provided it determines that:

(1) The person is employed by the Canadian railroad; and

(2) The person meets or exceeds the qualifications standards issued by Transport Canada for such service.

§ 240.229 Requirements for joint operations territory.

(a) Except for minimal joint operations provided for in paragraph (f) of this section, no railroad that is responsible for controlling the conduct of joint operations with another railroad shall permit or require any person to operate a locomotive in any class of train or engine service unless that person has been certified as a qualified locomotive engineer for the purposes of joint operations and issued a certificate that complies with § 240.223.

(b) Each railroad that is responsible for controlling the conduct of joint operations with another railroad shall certify a person as a qualified locomotive engineer for the purposes of joint operations either by making the determinations required under subpart C of this part or by relying on the certification issued by another railroad under this part.

(c) A railroad that controls joint operations may rely on the certification issued by another railroad under the following conditions:

(1) The controlling railroad shall determine:

(i) That the person has been certified as a qualified engineer under the provisions of this part by the railroad which employs that individual;

(ii) That the person certified as a locomotive engineer by the other railroad has demonstrated the necessary knowledge concerning the controlling railroad's operating rules, if the rules are different;

(iii) That the person certified as a locomotive engineer by the other railroad has the necessary operating skills concerning the joint operations territory; and

(iv) That the person certified as a locomotive engineer by the other railroad has the necessary familiarity with the physical characteristics for the joint operations territory; and,

(2) The railroad which employs the individual shall determine that the person called to operate on the controlling railroad is a certified engineer who

is qualified to operate on that track segment; and

(3) Each locomotive engineer who is called to operate on another railroad shall:

(i) Be qualified on the segment of track upon which he or she will operate in accordance with the requirements set forth by the controlling railroad; and,

(ii) Immediately notify the railroad upon which he or she is employed if he or she is not qualified to perform that service.

(d) A railroad that controls joint operations and certifies locomotive engineers from a different railroad may comply with the requirements of paragraph (a) of this section by noting its supplemental certification decision on the original certificate as provided for in § 240.223(c).

(e) A railroad responsible for controlling the conduct of joint operations with another railroad shall be deemed to be in compliance with paragraph (a) of this section when it provides a qualified person to accompany a locomotive engineer who lacks joint operations certification during that engineer's operations in joint operations territory. As used in this section qualified person means either a designated supervisor of locomotive engineers or a certified train service engineer determined by the controlling railroad to have the necessary knowledge concerning the controlling railroad's operating rules and to have the necessary operating skills including familiarity with its physical characteristics concerning the joint operations territory.

(f) A railroad that is responsible for controlling the conduct of joint operations with another railroad may permit a certified locomotive engineer to operate a locomotive in any class of train or engine service without determining that the person has been certified as a qualified locomotive engineer for the purposes of joint operations when a minimal joint operation is involved. For the purposes of this section a minimal joint operation exists when a locomotive or train belonging to one railroad is being operated on the same track on which operations are conducted by the railroad controlling operations, under the following conditions:

(1) The maximum authorized speed for operations on the track does not exceed 20 miles per hour;

(2) The track is other than a main track;

(3) Operations are conducted under operating rules that require every locomotive and train to proceed at a speed that permits stopping within one half the range of vision of the locomotive engineer; and

(4) The maximum distance for joint operations on the track does not exceed one mile.

[56 FR 28254, June 19, 1991, as amended at 58 FR 19003, Apr. 9, 1993; 64 FR 60993, Nov. 8, 1999]

§ 240.231 Requirements for locomotive engineers unfamiliar with physical characteristics in other than joint operations.

(a) Except as provided in paragraph (b) of this section, no locomotive engineer shall operate a locomotive over a territory unless he or she is qualified on the physical characteristics of the territory pursuant to the railroad's certification program.

(b) Except as provided in paragraph (c) of this section, if a locomotive engineer lacks qualification on the physical characteristics required by paragraph (a) of this section, he or she shall be assisted by a pilot qualified over the territory pursuant to the railroad's certification program.

(1) For a locomotive engineer who has never been qualified on the physical characteristics of the territory over which he or she is to operate a locomotive or train, the pilot shall be a person qualified and certified as a locomotive engineer who is not an assigned crew member.

(2) For a locomotive engineer who was previously qualified on the physical characteristics of the territory over which he or she is to operate a locomotive or train, but whose qualification has expired, the pilot may be any person, who is not an assigned crew member, qualified on the physical characteristics of the territory.

(c) Pilots are not required if the movement is on a section of track with

an average grade of less than 1% over 3 continuous miles, and

(1) The track is other than a main track; or

(2) The maximum distance the locomotive or train will be operated does not exceed one mile; or

(3) The maximum authorized speed for any operation on the track does not exceed 20 miles per hour; or

(4) Operations are conducted under operating rules that require every locomotive and train to proceed at a speed that permits stopping within one half the range of vision of the locomotive engineer.

[64 FR 60993, Nov. 8, 1999]

Subpart D—Administration of the Certification Programs

§ 240.301 Replacement of certificates.

A railroad shall have a system for the prompt replacement of lost, stolen or mutilated certificates and that system shall be reasonably accessible to certified locomotive engineers in need of a replacement certificate.

§ 240.303 Operational monitoring requirements.

(a) After December 31, 1991, each railroad to which this part applies shall, prior to FRA approval of its program in accordance with § 240.201, have a program to monitor the conduct of its certified locomotive engineers by performing both operational monitoring observations and by conducting unannounced operating rules compliance tests.

(b) The program shall be conducted so that each locomotive engineer shall be given at least one operational monitoring observation by a qualified supervisor of locomotive engineers in each calendar year.

(c) The program shall be conducted so that each locomotive engineer shall be given at least one unannounced compliance test each calendar year.

(d) The unannounced test program shall:

(1) Test engineer compliance with one or more provisions of the railroad's operating rules that require response to signals that display less than a ''clear'' aspect, if the railroad operates with a signal system that must comply with part 236 of this chapter;

(2) Test engineer compliance with one or more provisions of the railroad's operating rules, timetable or other mandatory directives that require affirmative response by the locomotive engineer to less favorable conditions than that which existed prior to initiation of the test;

(3) Test engineer compliance with provisions of the railroad's operating rules, timetable or other mandatory directives the violations of which by engineers were cited by the railroad as the cause of train accidents or train incidents in accident reports filed in compliance with part 225 of this chapter for the preceding year;

(4) Be conducted that so that the administration of these tests is effectively distributed throughout whatever portion of a 24-hour day that the railroad conducts its operations;

(5) Be conducted so that individual tests are administered without prior notice to the locomotive engineer being tested; and

(6) Be conducted so that the results of the test are recorded on the certificate and entered on the record established under § 240.215 within 30 days of the day the test is administered.

§ 240.305 Prohibited conduct.

After December 31, 1991,

(a) It shall be unlawful to:

(1) Operate a locomotive or train past a signal indication, excluding a hand or a radio signal indication or a switch, that requires a complete stop before passing it; or

(2) Operate a locomotive or train at a speed which exceeds the maximum authorized limit by at least 10 miles per hour. Where restricted speed is in effect, only those violations of the conditional clause of restricted speed rules (i.e., the clause that requires stopping within one half of the locomotive engineer's range of vision), or the operational equivalent thereof, which cause reportable accidents or incidents under part 225 of this chapter, shall be considered instances of failure to adhere to this section; or

(3) Operate a locomotive or train without adhering to procedures for the safe use of train or engine brakes when

the procedures are required for compliance with the initial terminal, intermediate terminal, or transfer train and yard test provisions of 49 CFR part 232 or when the procedures are required for compliance with the class 1, class 1A, class II, or running brake test provisions of 49 CFR part 238;

(4) Fail to comply with any mandatory directive concerning the movement of a locomotive or train by occupying main track or a segment of main track without proper authority or permission;

(5) Fail to comply with prohibitions against tampering with locomotive mounted safety devices, or knowingly operate or permit to be operated a train with an unauthorized disabled safety device in the controlling locomotive. (See 49 CFR part 218, subpart D, and appendix C to part 218);

(6) Be a Designated Supervisor of Locomotive Engineers, a certified locomotive engineer pilot or an instructor engineer who is monitoring, piloting or instructing a locomotive engineer and fails to take appropriate action to prevent a violation of paragraphs (a)(1) through (a)(5) of this section. Appropriate action does not mean that a supervisor, pilot or instructor must prevent a violation from occurring at all costs; the duty may be met by warning an engineer of a potential or foreseeable violation. A Designated Supervisor of Locomotive Engineers will not be held culpable under this section when this monitoring event is conducted as part of the railroad's operational compliance tests as defined in §§ 217.9 and 240.303 of this chapter.

(b) Each locomotive engineer who has received a certificate required under this part shall:

(1) Have that certificate in his or her possession while on duty as an engineer; and

(2) Display that certificate upon the receipt of a request to do so from

(i) A representative of the Federal Railroad Administration,

(ii) An officer of the issuing railroad, or

(iii) An officer of another railroad when operating a locomotive or train in joint operations territory.

(c) Any locomotive engineer who is notified or called to operate a locomotive or train and such operation would cause the locomotive engineer to exceed certificate limitations, set forth in accordance with subpart B of this part, shall immediately notify the railroad that he or she is not qualified to perform that anticipated service and it shall be unlawful for the railroad to require such service.

(d) During the duration of any certification interval, a locomotive engineer who has a current certificate from more than one railroad shall immediately notify the other certifying railroad(s) if he or she is denied recertification by a railroad or has his or her certification revoked by a railroad.

(e) Nothing in this section shall be deemed to alter a certified locomotive engineer's duty to comply with other provisions of this chapter concerning railroad safety.

[56 FR 28254, June 19, 1991, as amended at 58 FR 19004, Apr. 9, 1993; 64 FR 60993, Nov. 8, 1999]

§ 240.307 Revocation of certification.

(a) Except as provided for in § 240.119(e), a railroad that certifies or recertifies a person as a qualified locomotive engineer and, during the period that certification is valid, acquires information which convinces the railroad that the person no longer meets the qualification requirements of this part, shall revoke the person's certificate as a qualified locomotive engineer.

(b) Pending a revocation determination under this section, the railroad shall:

(1) Upon receipt of reliable information indicating the person's lack of qualification under this part, immediately suspend the person's certificate;

(2) Prior to or upon suspending the person's certificate, provide notice of the reason for the suspension, the pending revocation, and an opportunity for a hearing before a presiding officer other than the investigating officer. The notice may initially be given either orally or in writing. If given orally, it must be confirmed in writing and the written confirmation must be made promptly. Written confirmation which conforms to the notification provisions of an applicable collective bargaining agreement shall be deemed to satisfy

the written confirmation requirements of this section. In the absence of an applicable collective bargaining agreement provision, the written confirmation must be made within 96 hours.

(3) Convene the hearing within the deadline prescribed by either paragraph (c)(1) of this section or the applicable collective bargaining agreement as permitted under paragraph (d) of this section;

(4) Determine, on the record of the hearing, whether the person no longer meets the qualification requirements of this part stating explicitly the basis for the conclusion reached;

(5) When appropriate, impose the pertinent period of revocation provided for in § 240.117 or § 240.119; and

(6) Retain the record of the hearing for 3 years after the date the decision is rendered.

(c) Except as provided for in paragraphs (d), (f), (i) and (j) of this section, a hearing required by this section shall be conducted in accordance with the following procedures:

(1) The hearing shall be convened within 10 days of the date the certificate is suspended unless the locomotive engineer requests or consents to delay in the start of the hearing.

(2) The hearing shall be conducted by a presiding officer, who can be any qualified person authorized by the railroad other than the investigating officer.

(3) The presiding officer will exercise the powers necessary to regulate the conduct of the hearing for the purpose of achieving a prompt and fair determination of all material issues in controversy.

(4) The presiding officer shall convene and preside over the hearing.

(5) Testimony by witnesses at the hearing shall be recorded verbatim.

(6) All relevant and probative evidence shall be received unless the presiding officer determines the evidence to be unduly repetitive or so extensive and lacking in relevancy that its admission would impair the prompt, orderly, and fair resolution of the proceeding.

(7) The presiding officer may:

(i) Adopt any needed procedures for the submission of evidence in written form;

(ii) Examine witnesses at the hearing;

(iii) Convene, recess, adjourn or otherwise regulate the course of the hearing; and

(iv) Take any other action authorized by or consistent with the provisions of this part and permitted by law that may expedite the hearing or aid in the disposition of the proceeding.

(8) Parties may appear and be heard on their own behalf or through designated representatives. Parties may offer relevant evidence including testimony and may conduct such examination of witnesses as may be required for a full disclosure of the relevant facts.

(9) The record in the proceeding shall be closed at conclusion of the hearing unless the presiding officer allows additional time for the submission of information. In such instances the record shall be left open for such time as the presiding officer grants for that purpose.

(10) No later than 10 days after the close of the record, a railroad official, other than the investigating officer, shall prepare and sign a written decision in the proceeding.

(11) The decision shall:

(i) Contain the findings of fact as well as the basis therefor, concerning all material issues of fact presented on the record; and

(ii) Be served on the employee.

(12) The railroad shall have the burden of proving that the locomotive engineer's conduct was not in compliance with the applicable railroad operating rule or practice or part 219 of this chapter.

(d) A hearing required by this section which is conducted in a manner that conforms procedurally to the applicable collective bargaining agreement shall be deemed to satisfy the procedural requirements of this section.

(e) A hearing required under this section may be consolidated with any disciplinary or other hearing arising from the same facts, but in all instances a railroad official, other than the investigating officer, shall make separate findings as to the revocation required under this section.

(f) A person may waive the right to the hearing provided under this section. That waiver shall:

(1) Be made in writing;

(2) Reflect the fact that the person has knowledge and understanding of these rights and voluntarily surrenders them; and

(3) Be signed by the person making the waiver.

(g) A railroad that has relied on the certification by another railroad under the provisions of § 240.227 or § 240.229, shall revoke its certification if, during the period that certification is valid, the railroad acquires information which convinces it that another railroad has revoked its certification after determining, in accordance with the provisions of this section, that the person no longer meets the qualification requirements of this part. The requirement to provide a hearing under this section is satisfied when any single railroad holds a hearing and no additional hearing is required prior to a revocation by more than one railroad arising from the same facts.

(h) The period of certificate suspension prior to the commencement of a hearing required under this section shall be credited towards satisfying any applicable revocation period imposed in accordance with the provisions of § 240.117.

(i) A railroad:

(1) Shall not determine that the person failed to meet the qualification requirements of this part and shall not revoke the person's certification as provided for in paragraph (a) of this section if sufficient evidence exists to establish that an intervening cause prevented or materially impaired the locomotive engineer's ability to comply with the railroad operating rule or practice which constitutes a violation under § 240.117(e)(1) through (e)(5) of this part; or

(2) May determine that the person meets the qualification requirements of this part and decide not to revoke the person's certification as provided for in paragraph (a) of this section if sufficient evidence exists to establish that the violation of § 240.117(e)(1) through (e)(5) of this part was of a minimal nature and had no direct or potential effect on rail safety.

(j) The railroad shall place the relevant information in the records maintained in compliance with § 240.309 for Class I (including the National Railroad Passenger Corporation) and Class II railroads, and § 240.15 for Class III railroads if sufficient evidence meeting the criteria provided in paragraph (i) of this section, becomes available either:

(1) Prior to a railroad's action to suspend the certificate as provided for in paragraph (b)(1) of this section; or

(2) Prior to the convening of the hearing provided for in this section;

(k) Provided that the railroad makes a good faith determination after a reasonable inquiry that the course of conduct provided for in paragraph (i) of this section is appropriate, the railroad which does not suspend a locomotive engineer's certification, as provided for in paragraph (a) of this section, is not in violation of paragraph (a) of this section.

[58 FR 19004, Apr. 9, 1993, as amended at 60 FR 53137, Oct. 12, 1995; 64 FR 60994, Nov. 8, 1999]

§ 240.309 Railroad oversight responsibilities.

(a) No later than March 31 of each year (beginning in calendar year 1993), each Class I railroad (including the National Railroad Passenger Corporation and a railroad providing commuter service) and Class II railroad shall conduct a formal annual review and analysis concerning the administration of its program for responding to detected instances of poor safety conduct by certified locomotive engineers during the prior calendar year.

(b) Each review and analysis shall involve:

(1) The number and nature of the instances of detected poor safety conduct including the nature of the remedial action taken in response thereto;

(2) The number and nature of FRA reported train accidents attributed to poor safety performance by locomotive engineers;

(3) The number and type of operational monitoring test failures and observations of inadequate skill performance recorded by supervisors of locomotive engineers; and

(4) If it conducts joint operations with another railroad, the number of

locomotive engineers employed by such other railroad(s) to which such events were ascribed which the controlling railroad certified for joint operations purposes.

(c) Based on that review and analysis each railroad shall determine what action(s) it will take to improve the safety of train operations to reduce or eliminate future incidents of that nature.

(d) If requested in writing by FRA, the railroad shall provide a report of the findings and conclusions reached during such annual review and analysis effort.

(e) For reporting purposes, information about the nature of detected poor safety conduct shall be capable of segregation for study and evaluation purposes into the following categories:

(1) Incidents involving noncompliance with part 218;

(2) Incidents involving noncompliance with part 219;

(3) Incidents involving noncompliance with the procedures for the safe use of train or engine brakes when the procedures are required for compliance with the initial terminal, intermediate terminal, or transfer train and yard test provisions of 49 CFR part 232 or when the procedures are required for compliance with the class 1, class 1A, class II, or running brake test provisions of 49 CFR part 238;

(4) Incidents involving noncompliance with the railroad's operating rules involving operation of a locomotive or train to operate at a speed that exceeds the maximum authorized limit;

(5) Incidents involving noncompliance with the railroad's operating rules resulting in operation of a locomotive or train past any signal, excluding a hand or a radio signal indication or a switch, that requires a complete stop before passing it;

(6) Incidents involving noncompliance with the provisions of restricted speed, and the operational equivalent thereof, that must be reported under the provisions of part 225 of this chapter;

(7) Incidents involving occupying main track or a segment of main track without proper authority or permission;

(8) Incidents involving the failure to comply with prohibitions against tampering with locomotive mounted safety devices, or knowingly operating or permitting to be operated a train with an unauthorized or disabled safety device in the controlling locomotive;

(9) Incidents involving noncompliance with the railroad's operating practices (including train handling procedures) resulting in excessive in-train force levels; and

(f) For reporting purposes each category of detected poor safety conduct identified in paragraph (d) of this section shall be capable of being annotated to reflect the following:

(1) The nature of the remedial action taken and the number of events subdivided so as to reflect which of the following actions was selected:

(i) Imposition of informal discipline;

(ii) Imposition of formal discipline;

(iii) Provision of informal training; or

(iv) Provision of formal training; and

(2) If the nature of the remedial action taken was formal discipline, the number of events further subdivided so as to reflect which of the following punishments was imposed by the hearing officer:

(i) The person was withheld from service;

(ii) The person was dismissed from employment or

(iii) The person was issued demerits. If more than one form of punishment was imposed only that punishment deemed the most severe shall be shown.

(g) For reporting purposes each category of detected poor safety conduct identified in paragraph (d) of this section which resulted in the imposition of formal or informal discipline shall be annotated to reflect the following:

(1) The number of instances in which the railroad's internal appeals process reduced the punishment initially imposed at the conclusion of its hearing; and

(2) The number of instances in which the punishment imposed by the railroad was reduced by any of the following entities: The National Railroad Adjustment Board, a Public Law Board, a Special Board of Adjustment

or other body for the resolution of disputes duly constituted under the provisions of the Railway Labor Act.

(h) For reporting purposes each category of detected poor safety conduct identified in paragraph (d) of this section shall be capable of being annotated to reflect the following:

(1) The total number of incidents in that category;

(2) The number of incidents within that total which reflect incidents requiring an FRA accident/incident report; and

(3) The number of incidents within that total which were detected as a result of a scheduled operational monitoring effort.

[56 FR 28254, June 19, 1991, as amended at 64 FR 60994, Nov. 8, 1999]

Subpart E—Dispute Resolution Procedures

§ 240.401 Review board established.

(a) Any person who has been denied certification, denied recertification, or has had his or her certification revoked and believes that a railroad incorrectly determined that he or she failed to meet the qualification requirements of this regulation when making the decision to deny or revoke certification, may petition the Federal Railroad Administrator to review the railroad's decision.

(b) The Federal Railroad Administrator has delegated initial responsibility for adjudicating such disputes to the Locomotive Engineer Review Board.

(c) The Locomotive Engineer Review Board shall be composed of at least three employees of the Federal Railroad Administration selected by the Administrator.

[56 FR 28254, June 19, 1991, as amended at 58 FR 19005, Apr. 9, 1993]

§ 240.403 Petition requirements.

(a) To obtain review of a railroad's decision to deny certification, deny recertification, or revoke certification, a person shall file a petition for review that complies with this section.

(b) Each petition shall:

(1) Be in writing;

(2) Be submitted in triplicate to the Docket Clerk, Office of Chief Counsel, Federal Railroad Administration, 1120 Vermont Avenue, NW, Washington, DC 20590;

(3) Contain all available information that the person thinks supports the person's belief that the railroad acted improperly, including:

(i) The petitioner's full name;

(ii) The petitioner's current mailing address;

(iii) The petitioner's daytime telephone number;

(iv) The name and address of the railroad; and

(v) The facts that the petitioner believes constitute the improper action by the railroad, specifying the locations, dates, and identities of all persons who were present or involved in the railroad's actions (to the degree known by the petitioner);

(4) Explain the nature of the remedial action sought;

(5) Be supplemented by a copy of all written documents in the petitioner's possession that document that railroad's decision; and

(6) Be filed in a timely manner.

(c) A petition seeking review of a railroad's decision to deny certification or recertification filed with FRA more than 180 days after the date of the railroad's denial decision will be denied as untimely.

(d) A petition seeking review of a railroad's decision to revoke certification in accordance with the procedures required by § 240.307 filed with FRA more than 120 days after the date of the railroad's revocation decision will be denied as untimely except that the Locomotive Engineer Review Board for cause shown may extend the petition filing period at any time in its discretion:

(1) Provided the request for extension is filed before the expiration of the period provided in this paragraph (d); or

(2) Provided that the failure to timely file was the result of excusable neglect.

(e) A party aggrieved by a Board decision to deny a petition as untimely

may file an appeal with the Administrator in accordance with § 240.411.

[56 FR 28254, June 19, 1991, as amended at 64 FR 60995, Nov. 8, 1999; 64 FR 70196, Dec. 16, 1999]

§ 240.405 Processing qualification review petitions.

(a) Each petition shall be acknowledged in writing by FRA. The acknowledgment shall contain the docket number assigned to the petition and a statement of FRA's intention that the Board will render a decision on this petition within 180 days from the date that the railroad's response is received or from the date upon which the railroad's response period has lapsed pursuant to paragraph (c) of this section.

(b) Upon receipt of the petition, FRA will notify the railroad that it has received the petition and provide the railroad with a copy of the petition.

(c) The railroad will be given a period of not to exceed 60 days to submit to FRA any information that the railroad considers pertinent to the petition. Late filings will only be considered to the extent practicable.

(d) A railroad that submits such information shall:

(1) Identify the petitioner by name and the docket number of the review proceeding;

(2) Provide a copy of the information being submitted to FRA to the petitioner.

(3) Submit the information in triplicate to the Docket Clerk, Federal Railroad Administration, 400 Seventh Street SW., Washington, DC 20590;

(e) Each petition will then be referred to the Locomotive Engineer Review Board for a decision.

(f) The Board will determine whether the denial or revocation of certification or recertification was improper under this regulation (*i.e.*, based on an incorrect determination that the person failed to meet the qualification requirements of this regulation) and grant or deny the petition accordingly. The Board will not otherwise consider the propriety of a railroad's decision, *i.e.*, it will not consider whether the railroad properly applied its own more stringent requirements.

(g) Notice of that decision will be provided in writing to both the petitioner and the railroad. The decision will include findings of fact on which it is based.

[56 FR 28254, June 19, 1991, as amended at 64 FR 60995, Nov. 8, 1999]

§ 240.407 Request for a hearing.

(a) If adversely affected by the Locomotive Engineer Review Board decision, either the petitioner before the Board or the railroad involved shall have a right to an administrative proceeding as prescribed by § 240.409.

(b) To exercise that right, the adversely affected party shall, within 20 days of service of the Board's decision on that party, file a written request with the Docket Clerk, Department of Transportation Central Docket Management System, Nassif Building, Room Pl–401, 400 Seventh Street, S.W., Washington, D.C. 20590. The form of such request may be in written or electronic form consistent with the standards and requirements established by the Central Docket Management System and posted on its web site at *http://dms.dot.gov*.

(c) The result of a failure to request a hearing within the period provided in paragraph (b) of this section is that the Locomotive Engineer Review Board's decision will constitute final agency action.

(d) If a party elects to request a hearing, that person shall submit a written request to the Docket Clerk containing the following:

(1) The name, address, and telephone number of the respondent and the requesting party's designated representative, if any;

(2) The specific factual issues, industry rules, regulations, or laws that the requesting party alleges need to be examined in connection with the certification decision in question; and

(3) The signature of the requesting party or the requesting party's representative, if any.

(e) Upon receipt of a hearing request complying with paragraph (d) of this section, FRA shall arrange for the appointment of a presiding officer who shall schedule the hearing for the earliest practicable date.

[60 FR 53137, Oct. 12, 1995, as amended at 64 FR 70196, Dec. 16, 1999]

§ 240.409 Hearings.

(a) An administrative hearing for a locomotive engineer qualification petition shall be conducted by a presiding officer, who can be any person authorized by the Administrator, including an administrative law judge.

(b) The presiding officer may exercise the powers of the Administrator to regulate the conduct of the hearing for the purpose of achieving a prompt and fair determination of all material issues in controversy.

(c) The presiding officer shall convene and preside over the hearing. The hearing shall be a *de novo* hearing to find the relevant facts and determine the correct application of this part to those facts. The presiding officer may determine that there is no genuine issue covering some or all material facts and limit evidentiary proceedings to any issues of material fact as to which there is a genuine dispute.

(d) The presiding officer may authorize discovery of the types and quantities which in the presiding officer's discretion will contribute to a fair hearing without unduly burdening the parties. The presiding officer may impose appropriate non-monetary sanctions, including limitations as to the presentation of evidence and issues, for any party's willful failure or refusal to comply with approved discovery requests.

(e) Every petition, motion, response, or other authorized or required document shall be signed by the party filing the same, or by a duly authorized officer or representative of record, or by any other person. If signed by such other person, the reason therefor must be stated and the power of attorney or other authority authorizing such other person to subscribe the document must be filed with the document. The signature of the person subscribing any document constitutes a certification that he or she has read the document; that to the best of his or her knowledge, information and belief every statement contained in the document is true and no such statements are misleading; and that it is not interposed for delay or to be vexatious.

(f) After the request for a hearing is filed, all documents filed or served upon one party must be served upon all parties. Each party may designate a person upon whom service is to be made when not specified by law, regulation, or directive of the presiding officer. If a party does not designate a person upon whom service is to be made, then service may be made upon any person having subscribed to a submission of the party being served, unless otherwise specified by law, regulation, or directive of the presiding officer. Proof of service shall accompany all documents when they are tendered for filing.

(g) If any document initiating, filed, or served in, a proceeding is not in substantial compliance with the applicable law, regulation, or directive of the presiding officer, the presiding officer may strike or dismiss all or part of such document, or require its amendment.

(h) Any party to a proceeding may appear and be heard in person or by an authorized representative.

(i) Any person testifying at a hearing or deposition may be accompanied, represented, and advised by an attorney or other representative, and may be examined by that person.

(j) Any party may request to consolidate or separate the hearing of two or more petitions by motion to the presiding officer, when they arise from the same or similar facts or when the matters are for any reason deemed more efficiently heard together.

(k) Except as provided in § 240.407(c) of this part and paragraph (u)(4) of this section, whenever a party has the right or is required to take action within a period prescribed by this part, or by law, regulation, or directive of the presiding officer, the presiding officer may extend such period, with or without notice, for good cause, provided another party is not substantially prejudiced by such extension. A request to extend a period which has already expired may be denied as untimely.

(l) An application to the presiding officer for an order or ruling not otherwise specifically provided for in this part shall be by motion. The motion shall be filed with the presiding officer and, if written, served upon all parties. All motions, unless made during the hearing, shall be written. Motions made during hearings may be made

orally on the record, except that the presiding officer may direct that any oral motion be reduced to writing. Any motion shall state with particularity the grounds therefor and the relief or order sought, and shall be accompanied by any affidavits or other evidence desired to be relied upon which is not already part of the record. Any matter submitted in response to a written motion must be filed and served within fourteen (14) days of the motion, or within such other period as directed by the presiding officer.

(m) Testimony by witnesses at the hearing shall be given under oath and the hearing shall be recorded verbatim. The presiding officer shall give the parties to the proceeding adequate opportunity during the course of the hearing for the presentation of arguments in support of or in opposition to motions, and objections and exceptions to rulings of the presiding officer. The presiding officer may permit oral argument on any issues for which the presiding officer deems it appropriate and beneficial. Any evidence or argument received or proffered orally shall be transcribed and made a part of the record. Any physical evidence or written argument received or proffered shall be made a part of the record, except that the presiding officer may authorize the substitution of copies, photographs, or descriptions, when deemed to be appropriate.

(n) The presiding officer shall employ the Federal Rules of Evidence for United States Courts and Magistrates as general guidelines for the introduction of evidence. Notwithstanding paragraph (m) of this section, all relevant and probative evidence shall be received unless the presiding officer determines the evidence to be unduly repetitive or so extensive and lacking in relevancy that its admission would impair the prompt, orderly, and fair resolution of the proceeding.

(o) The presiding officer may:

(1) Administer oaths and affirmations;

(2) Issue subpoenas as provided for in § 209.7 of part 209 in this chapter;

(3) Adopt any needed procedures for the submission of evidence in written form;

(4) Examine witnesses at the hearing;

(5) Convene, recess, adjourn or otherwise regulate the course of the hearing; and

(6) Take any other action authorized by or consistent with the provisions of this part and permitted by law that may expedite the hearing or aid in the disposition of the proceeding.

(p) The petitioner before the Locomotive Engineer Review Board, the railroad involved in taking the certification action, and FRA shall be parties at the hearing. All parties may participate in the hearing and may appear and be heard on their own behalf or through designated representatives. All parties may offer relevant evidence, including testimony, and may conduct such cross-examination of witnesses as may be required to make a record of the relevant facts.

(q) The party requesting the administrative hearing shall be the ''hearing petitioner.'' The hearing petitioner shall have the burden of proving its case by a preponderance of the evidence. Hence, if the hearing petitioner is the railroad involved in taking the certification action, that railroad will have the burden of proving that its decision to deny certification, deny recertification, or revoke certification was correct. Conversely, if the petitioner before the Locomotive Engineer Review Board is the hearing petitioner, that person will have the burden of proving that the railroad's decision to deny certification, deny recertification, or revoke certification was incorrect. Between the petitioner before the Locomotive Engineer Review Board and the railroad involved in taking the certification action, the party who is not the hearing petitioner will be a respondent.

(r) FRA will be a mandatory party to the administrative hearing. At the start of each proceeding, FRA will be a respondent.

(s) The record in the proceeding shall be closed at the conclusion of the evidentiary hearing unless the presiding officer allows additional time for the submission of additional evidence. In such instances the record shall be left open for such time as the presiding officer grants for that purpose.

(t) At the close of the record, the presiding officer shall prepare a written decision in the proceeding.

(u) The decision:

(1) Shall contain the findings of fact and conclusions of law, as well as the basis for each concerning all material issues of fact or law presented on the record;

(2) Shall be served on the hearing petitioner and all other parties to the proceeding;

(3) Shall not become final for 35 days after issuance;

(4) Constitutes final agency action unless an aggrieved party files an appeal within 35 days after issuance; and

(5) Is not precedential.

[60 FR 53137, Oct. 12, 1995]

§ 240.411 Appeals.

(a) Any party aggrieved by the presiding officer's decision may file an appeal. The appeal must be filed within 35 days of issuance of the decision with the Federal Railroad Administrator, 400 Seventh Street SW., Washington, DC 20590. A copy of the appeal shall be served on each party. The appeal shall set forth objections to the presiding officer's decision, supported by reference to applicable laws and regulations and with specific reference to the record. If no appeal is timely filed, the presiding officer's decision constitutes final agency action.

(b) A party may file a reply to the appeal within 25 days of service of the appeal. The reply shall be supported by reference to applicable laws and regulations and with specific reference to the record, if the party relies on evidence contained in the record.

(c) The Administrator may extend the period for filing an appeal or a response for good cause shown, provided that the written request for extension is served before expiration of the applicable period provided in this section.

(d) The Administrator has sole discretion to permit oral argument on the appeal. On the Administrator's own initiative or written motion by any party, the Administrator may grant the parties an opportunity for oral argument.

(e) The Administrator may remand, vacate, affirm, reverse, alter or modify the decision of the presiding officer and the Administrator's decision constitutes final agency action except where the terms of the Administrator's decision (for example, remanding a case to the presiding officer) show that the parties' administrative remedies have not been exhausted.

(f) Where a party files an appeal from a Locomotive Engineer Review Board decision pursuant to § 240.403(e), the Administrator may affirm or vacate the Board's decision, and may remand the petition to the Board for further proceedings. An Administrator's decision to affirm the Board's decision constitutes final agency action.

[56 FR 28254, June 19, 1991, as amended at 60 FR 53138, Oct. 12, 1995; 64 FR 60995, Nov. 8, 1999]

APPENDIX A TO PART 240—SCHEDULE OF CIVIL PENALTIES [1]

Section	Violation	Willful violation
Subpart B—Component Elements		
240.101—Program Failures		
(a) Failure to have program	$5,000	$10,000
(b) Program that fails to address a subject	2,500	5,000
240.103—Failure to:		
(a) follow Appendix B	1,000	2,000
(d) to resubmit, when directed by FRA	1,000	2,000
240.104—Allowing uncertified person to operate non-traditional locomotives	5,000	10,000
240.105—Failure to have or execute adequate procedure for selection of supervisors	2,500	5,000
240.107—Classes of Service		
(a) Failure to designate classes of service	2,000	4,000
240.109—Limitations on considering prior conduct records		
(a) Failure to have procedure for determining eligibility	2,500	5,000
(e) Considering excluded data	2,000	4,000
(f,g) Failure to provide timely review opportunity	2,000	4,000
240.111—Furnishing Motor Vehicle Records:		
(a) Failure to action required to make information available	1,000	2,000
(b) Failure to request:		

Section	Violation	Willful violation
(1) local record	1,000	2,000
(2) NDR record	1,000	2,000
(f) Failure to request additional record	1,000	2,000
(g) Failure to notify of absence of license	750	1,500
(h) Failure to submit request in timely manner	750	1,500
(i) Failure to report within 48 hours or railroad taking certification action for not reporting earlier than 48 hours	1,000	2,000
240.113—Furnishing prior employment information		
(a) Failure to take action required to make information available	1,000	2,000
(b) Failure to request record	1,000	2,000
240.115—Criteria for considering prior motor vehicle conduct		
(b) Considering excluded data	2,000	4,000
(c) Failure to		
(1) consider data	5,000	7,500
(3,4) properly act in response to data	2,500	5,000
240.117—Consideration of Operational Rules Compliance Records:		
(a) Failure to have program and procedures	5,000	10,000
(b–j) Failure to have adequate program or procedure	2,500	5,000
240.119—Consideration of substance abuse /rules compliance records		
(a) Failure to have program and procedures	5,000	10,000
(b–e) Failure to have adequate program or procedure	2,500	5,000
240.121—Failure to have adequate procedure for determining acuity	2,500	5,000
(f) Failure of engineer to notify	2,500	5,000
240.123—Failure to have:		
(b) Adequate procedures for continuing education	2,500	5,000
(c) adequate procedures for training new engineers	2,500	5,000
240.125—Failure to have		
(a) adequate procedures for testing knowledge	2,500	5,000
(d) adequate procedures for documenting testing	2,500	5,000
240.127—Failure to have		
(a) adequate procedures for evaluating skill performance	2,500	5,000
(c) adequate procedures for documenting skills testing	2,500	5,000
240.129—Failure to have		
(a–b) adequate procedures for monitoring performance	2,500	5,000
Subpart C—Implementation of the Process		
240.201—Schedule for implementation		
(a) Failure to select supervisors by specified date	1,000	2,000
(b) Failure to identify grandfathered engineers	2,000	4,000
(c) Failure to issue certificate to engineer	1,000	2,000
(d) Allowing uncertified person to operate	5,000	10,000
(e–g) Certifying without complying with subpart C	2,500	5,000
(h–i) Failure to issue certificate to engineer	1,000	2,000
240.203 (a) Designating a person as a supervisor without determining that		
(1) person knows and understands this part	2,500	5,000
(2) person can test and evaluate engineers	5,000	7,500
(3) person has experience to prescribe remedies	2,500	5,000
(b) Certifying a person without determining that		
(1) person meets the eligibility criteria	5,000	7,500
(2) person meets the medical criteria	2,500	5,000
(3) person has demonstrated knowledge	2,500	5,000
(4) person has demonstrated skills	2,500	5,000
(c) Certifying a person without determining that		
(1) person has completed training program	2,500	5,000
(2) person meets the eligibility criteria	2,500	5,000
(3) time has elapsed	2,500	5,000
240.205—Procedures for determining eligibility based on prior safety conduct		
(a) Selecting person lacking eligibility	5,000	7,500
(d) Failure to have basis for taking action	2,500	5,000
240.207—Ineligibility based on medical condition		
(a) Selecting person lacking proper acuity	2,000	4,000
(b) Failure to have basis for finding of proper acuity	1,000	2,000
(c) Acuity examinations performed by unauthorized person	1,000	2,000
(d) Failure to note need for device to achieve acuity	1,000	2,000
(e) Failure to use device needed for proper acuity	1,000	2,000
240.209—Demonstrating knowledge		
(b) Failure to properly determine knowledge	2,500	5,000
(c) Improper test procedure	2,000	4,000
(d) Failure to document test results	1,000	2,000
(e) Allowing person to operate despite test failure	2,500	5,000
240.211—Demonstrating skills		
(b) Failure to properly determine knowledge	2,500	5,000
(c) Improper test procedure	2,000	4,000
(d) Failure to document test results	1,000	2,000

Section	Violation	Willful violation
(e) Allowing person to operate despite test failure	2,500	5,000
240.213—Completion of approved training program		
(a) Failure to properly determine	2,500	5,000
(b) Failure to document successful program completion	2,000	4,000
240.215—Supporting information		
(a, f–h) Failure to have a record	1,000	2,000
(b) Failure to have complete record	500	1,000
(i) Falsification of record	(–)	10,000
240.217—Time limits for making determinations		
(a, c) Exceeding time limit	2,000	4,000
240.219—Denial of certification		
(a) Failure to notify or provide opportunity for comment	2,000	4,000
(c) Failure to notify, provide data, or untimely notification	2,000	4,000
240.221—Identification of persons		
(a–c) Failure to have a record	2,000	4,000
(d) Failure to update a record	2,000	4,000
(e–f) Failure to make a record available	1,000	2,000
240.223—Certificate criteria		
(a) Improper certificate	500	1,000
(b) Failure to designate those with signatory authority	500	1,000
(d) Falsification of certificate	(–)	10,000
240.225—Railroad Relying on Determination of Another:		
(a) Failure to address in program or failure to require newly hired engineer to take entire training program	5,000	7,500
(1) Reliance on expired certification	2,500	5,000
(2) Reliance on wrong class of service	2,500	5,000
(3) Failure to familiarize person with new operational territory	2,000	4,000
(4) Failure to determine knowledge	2,000	4,000
(5) Failure to determine performance skills	2,000	4,000
240.227—Railroad Relying on Requirements of a Different Country		
(a) Joint operator reliance		
(1) on person not employed	1,000	2,000
(2) on person who fails to meet Canadian requirements	1,000	2,000
(b) Canadian railroad reliance		
(1) on person not employed	1,000	2,000
(2) on person who fails to meet Canadian requirements	1,000	2,000
240.229—Requirements for Joint Operations Territory:		
(a) Allowing uncertified person to operate	2,000	4,000
(b) Certifying without making determinations or relying on another railroad	2,500	5,000
(c) Failure of.		
(1) controlling railroad certifying without determining certification status, knowledge, skills, or familiarity with physical characteristics	4,000	8,000
(2) employing railroad to determine person's certified and qualified status for controlling railroad	4,000	8,000
(3) person to notify employing railroad of lack of qualifications	4,000	8,000
(d) Failure to provide qualified person	2,000	4,000
240.231—Persons Qualified on Physical Characteristics in Other Than Joint Operations:		
(a) Person unqualified, no exception applies or railroad does not adequately address in program	5,000	10,000
(b) Failure to have a pilot.		
(1) for engineer who has never been qualified	4,000	8,000
(2) for engineer previously qualified	2,500	5,000
Subpart D—Program Administration		
240.301—Failure to have system for certificate replacement	2,000	4,000
240.303—Monitoring operations		
(a) Failure to have program	5,000	10,000
(b) Failure to observe each person annually	1,000	2,000
(c) Failure to test each person annually	1,000	2,000
(d) Failure to test properly	1,000	2,000
240.305—Prohibited Conduct:		
(a) Unlawful:		
(1) passing of stop signal	2,500	5,000
(2) control of speed	2,500	5,000
(3) brake tests	2,500	5,000
(4) occupancy of main track	2,500	5,000
(5) tampering on operation with disabled safety device	2,500	5,000
(6) supervisor, pilot, or instructor fails to take appropriate action	2,500	5,000
(b) Failure of engineer to:		
(1) carry certificate	1,000	2,000
(2) display certificate when requested	1,000	2,000
(c) Failure of engineer to notify railroad of limitations or railroad requiring engineer to exceed limitations	4,000	8,000
(d) Failure of engineer to notify railroad of denial or revocation	4,000	8,000

Section	Violation	Willful violation
240.307—Revocation of Certification:		
(a) Failure to withdraw person from service	2,500	5,000
(b) Failure to notify, provide hearing opportunity, or untimely procedures	2,500	5,000
(c–h) Failure of railroad to comply with hearing or waiver procedures	1,000	2,000
(j) Failure of railroad to make record	2,500	5,000
(k) Failure of railroad to conduct reasonable inquiry or make good faith determination	5,000	10,000
240.309—Oversight Responsibility Report:		
(a) Failure to report or to report on time	1,000	2,000
(b–h) Incomplete or inaccurate report	2,000	4,000

[1] A penalty may be assessed against an individual only for a willful violation. The Administrator reserves the right to assess a penalty of up to $27,000 for any violation where circumstances warrant. See 49 CFR part 209, appendix A.

[56 FR 28254, June 19, 1991, as amended at 60 FR 53138, Oct. 12, 1995; 63 FR 11624, Mar. 10, 1998; 64 FR 60995, Nov. 8, 1999; 69 FR 30595, May 28, 2004]

APPENDIX B TO PART 240—PROCEDURES FOR SUBMISSION AND APPROVAL OF LOCOMOTIVE ENGINEER QUALIFICATION PROGRAMS

This appendix establishes procedures for the submission and approval of a railroad's program concerning the training, testing, and evaluating of persons seeking certification or recertification as a locomotive engineer in accordance with the requirements of this part (see §§ 240.101, 240.103, 240.105, 240.107, 240.123, 240.125, 240.127 and 240.129). It also contains guidance on how FRA will exercise its review and approval responsibilities.

Submission by a Railroad

As provided for in § 240.101, each railroad must have a program for determining the qualifications of each person it permits or requires to operate a locomotive. In designing its program a railroad must take into account the trackage and terrain over which it operates, the system(s) for train control that are employed, the operational design characteristics of the track and equipment being operated including train length, train makeup, and train speeds. Each railroad must submit its individual program to FRA for approval as provided for in § 240.103. Each program must be accompanied by a request for approval organized in accordance with this appendix. Requests for approval must contain appropriate references to the relevant portion of the program being discussed. Requests should be submitted in writing on standard sized paper (8-1/2×11) and can be in letter or narrative format. The railroad's submission shall be sent to the Associate Administrator for Safety, FRA. The mailing address for FRA is 400 Seventh Street, SW., Washington, DC 20590.

Organization of the Submission

Each request should be organized to present the required information in the following standardized manner. Each section must begin by giving the name, title, telephone number, and mailing address of the person to be contacted concerning the matters addressed by that section. If a person is identified in a prior section, it is sufficient to merely repeat the person's name in a subsequent section.

Section 1 of the Submission: General Information and Elections

The first section of the request must contain the name of the railroad, the person to be contacted concerning the request (including the person's name, title, telephone number, and mailing address) and a statement electing either to accept responsibility for educating previously untrained persons to be qualified locomotive engineers or recertify only engineers previously certified by other railroads (see § 240.103(b)).

If a railroad elects not to conduct the training of persons not previously trained to be a locomotive engineer, the railroad is not obligated to submit information on how the previously untrained will be trained. A railroad that makes this election will be limited to recertifying persons initially certified by another railroad. A railroad that initially elects not to accept responsibility for training its own locomotive engineers can rescind its initial election by obtaining FRA approval of a modification of its program (see § 240.103(e)).

If a railroad elects to accept responsibility for conducting the education of persons not previously trained to be locomotive engineers, the railroad is obligated to submit information on how such persons will be trained but has no duty to actually conduct such training. A railroad that elects to accept the responsibility for the training of such persons may authorize another railroad or a non-railroad entity to perform the actual training effort. The electing railroad remains responsible for assuring that such other training providers adhere to the training program the railroad submits.

This section must also state which class or classes of service the railroad will employ. (See §240.107).

Section 2 of the Submission: Selection of Supervisors of Locomotive Engineers

The second section of the request must contain information concerning the railroad's procedure for selecting the person or persons it will rely on to evaluate the knowledge, skill, and ability of persons seeking certification or recertification. As provided for in §240.105 each railroad must have a procedure for selecting supervisors of locomotive engineers which assures that persons so designated can appropriately test and evaluate the knowledge, skill, and ability of individuals seeking certification or recertification.

Section 240.105 provides a railroad latitude to select the criteria and evaluation methodology it will rely on to determine which person or persons have the required capacity to perform as a supervisor of locomotive engineers. The railroad must describe in this section how it will use that latitude and evaluate those it designates as supervisors of locomotive engineers so as to comply with the performance standard set forth in §240.105(b). The railroad must identify, in sufficient detail to permit effective review by FRA, the criteria for evaluation it has selected. For example, if a railroad intends to rely on one or more of the following, a minimum level of prior experience as an engineer, successful completion of a course of study, or successful passage of a standardized testing program, the submission must state which criteria it will employ.

Section 3 of the Submission: Training Persons Previously Certified

The third section of the request must contain information concerning the railroad's program for training previously certified locomotive engineers. As provided for in §240.123(b) each railroad must have a program for the ongoing education of its locomotive engineers to assure that they maintain the necessary knowledge concerning personal safety, operating rules and practices, mechanical condition of equipment, methods of safe train handling (including familiarity with physical characteristics), and relevant Federal safety rules.

Section 240.123(b) provides a railroad latitude to select the specific subject matter to be covered, duration of the training, method of presenting the information, and the frequency with which the training will be provided. The railroad must describe in this section how it will use that latitude to assure that its engineers remain knowledgeable concerning the safe discharge of their train operation responsibilities so as to comply with the performance standard set forth in §240.123(b). This section must contain sufficient detail to permit effective evaluation of the railroad's training program in terms of the subject matter covered, the frequency and duration of the training sessions, the training environment employed (for example, and use of classroom, use of computer based training, use of simulators, use of film or slide presentations, use of on-job-training) and which aspects of the program are voluntary or mandatory.

Safe train handling involves both abstract knowledge about the appropriate use of engine controls and the application of that knowledge to trains of differing composition traversing varying terrain. Time and circumstances have the capacity to diminish both abstract knowledge and the proper application of that knowledge to discrete events. Time and circumstances also have the capacity to alter the value of previously obtained knowledge and the application of that knowledge. In formulating how it will use the discretion being afforded, each railroad must design its program to address both loss of retention of knowledge and changed circumstances, and this section of the submission to FRA must address these matters.

For example, locomotive engineers need to have their fundamental knowledge of train operations refreshed periodically. Each railroad needs to advise FRA how that need is satisfied in terms of the interval between attendance at such training, the nature of the training being provided, and methods for conducting the training. A matter of particular concern to FRA is how each railroad acts to assure that engineers remain knowledgeable about safe train handling procedures if the territory over which a locomotive engineer is authorized to operate is territory from which the engineer has been absent. The railroad must have a plan for the familiarization training that addresses the question of how long a person can be absent before needing more education and, once that threshold is reached, how the person will acquire the needed education. Similarly, the program must address how the railroad responds to changes such as the introduction of new technology, new operating rule books, or significant changes in operations including alteration in the territory engineers are authorized to operate over.

Section 4 of the Submission: Testing and Evaluating Persons Previously Certified

The fourth section of the request must contain information concerning the railroad's program for testing and evaluating previously certified locomotive engineers. As provided for in §240.125 and §240.127, each railroad must have a program for the ongoing testing and evaluating of its locomotive

engineers to assure that they have the necessary knowledge and skills concerning personal safety, operating rules and practices, mechanical condition of equipment, methods of safe train handling (including familiarity with physical characteristics), and relevant Federal safety rules. Similarly, each railroad must have a program for ongoing testing and evaluating to assure that its locomotive engineers have the necessary vision and hearing acuity as provided for in §240.121.

Sections 240.125 and 240.127 require that a railroad rely on written procedures for determining that each person can demonstrate his or her knowledge of the railroad's rules and practices and skill at applying those rules and practices for the safe operation of a locomotive or train. Section 240.125 directs that, when seeking a demonstration of the person's knowledge, a railroad must employ a written test that contains objective questions and answers and covers the following subject matters: (i) Personal safety practices; (ii) operating practices; (iii) equipment inspection practices; (iv) train handling practices (including familiarity with the physical characteristics of the territory); and (v) compliance with relevant Federal safety rules. The test must accurately measure the person's knowledge of all of these areas.

Section 240.125 provides a railroad latitude in selecting the design of its own testing policies (including the number of questions each test will contain, how each required subject matter will be covered, weighting (if any) to be given to particular subject matter responses, selection of passing scores, and the manner of presenting the test information). The railroad must describe in this section how it will use that latitude to assure that its engineers will demonstrate their knowledge concerning the safe discharge of their train operation responsibilities so as to comply with the performance standard set forth in §240.125.

Section 240.127 directs that, when seeking a demonstration of the person's skill, a railroad must employ a test and evaluation procedure conducted by a designated supervisor of locomotive engineers that contains an objective evaluation of the person's skills at applying the railroad's rules and practices for the safe operation of trains. The test and evaluation procedure must examine the person's skills in terms of all of the following subject matters: (i) Operating practices; (ii) equipment inspection practices; (iii) train handling practices (including familiarity with the physical characteristics of the territory); and (iv) compliance with relevant Federal safety rules. The test must be sufficient to effectively examine the person's skills while operating a train in the most demanding type of service which the person is likely to encounter in the normal course of events once he or she is deemed qualified.

Section 240.127 provides a railroad latitude in selecting the design of its own testing and evaluation procedures (including the duration of the evaluation process, how each required subject matter will be covered, weighing (if any) to be given to particular subject matter response, selection of passing scores, and the manner of presenting the test information). The section should provide information concerning the procedures which the railroad will follow that achieve the objectives described in FRA's recommended practices (see appendix E) for conducting skill performance testing. The section also gives a railroad the latitude to employ either a Type 1 or a Type 2 simulator (properly programmed) to conduct the test and evaluation procedure. A railroad must describe in this section how it will use that latitude to assure that its engineers will demonstrate their skills concerning the safe discharge of their train operation responsibilities so as to comply with the performance standard set forth in §240.127.

Section 240.121 provides a railroad latitude to rely on the professional medical opinion of the railroad's medical examiner concerning the ability of a person with substandard acuity to safely operate a locomotive. The railroad must describe in this section how it will assure that its medical examiner has sufficient information concerning the railroad's operations to effectively form appropriate conclusions about the ability of a particular individual to safely operate a train.

Section 5 of the Submission: Training, Testing, and Evaluating Persons Not Previously Certified

Unless a railroad has made an election not to accept responsibility for conducting the initial training of persons to be locomotive engineers, the fifth section of the request must contain information concerning the railroad's program for educating, testing, and evaluating persons not previously trained as locomotive engineers. As provided for in §240.123(c), a railroad that is issuing an initial certification to a person to be a locomotive engineer must have a program for the training, testing, and evaluating of its locomotive engineers to assure that they acquire the necessary knowledge and skills concerning personal safety, operating rules and practices, mechanical condition of equipment, methods of safe train handling (including familiarity with physical characteristics), and relevant Federal safety rules.

Section 240.123 establishes a performance standard and gives a railroad latitude in selecting how it will meet that standard. A railroad must describe in this section how it will use that latitude to assure that its engineers will acquire sufficient knowledge and skill and demonstrate their knowledge and

skills concerning the safe discharge of their train operation responsibilities. This section must contain the same level of detail concerning initial training programs as that described for each of the components of the overall program contained in sections 2 through 4 of this appendix. A railroad that plans to accept responsibility for the initial training of locomotive engineers may authorize another railroad or a non-railroad entity to perform the actual training effort. The authorizing railroad may submit a training program developed by that authorized trainer but the authorizing railroad remains responsible for assuring that such other training providers adhere to the training program submitted. Railroads that elect to rely on other entities, to conduct training away from the railroad's own trackage, must indicate how the student will be provided with the required familiarization with the physical characteristics for its trackage.

Section 6 of the Submission: Monitoring Operational Performance by Certified Engineers

The final section of the request must contain information concerning the railroad's program for monitoring the operation of its certified locomotive engineers. As provided for in §240.129, each railroad must have a program for the ongoing monitoring of its locomotive engineers to assure that they operate their locomotives in conformity with the railroad's operating rules and practices including methods of safe train handling and relevant Federal safety rules.

Section 240.129 requires that a railroad annually observe each locomotive engineer demonstrating his or her knowledge of the railroad's rules and practices and skill at applying those rules and practices for the safe operation of a locomotive or train. Section 240.129 directs that the observation be conducted by a designated supervisor of locomotive engineers but provides a railroad latitude in selecting the design of its own observation procedures (including the duration of the observation process, reliance on tapes that record the specifics of train operation, and the specific aspects of the engineer's performance to be covered). The section also gives a railroad the latitude to employ either a Type 1 or a Type 2 simulator (properly programmed) to conduct monitoring observations. A railroad must describe in this section how it will use that latitude to assure that the railroad is monitoring that its engineers demonstrate their skills concerning the safe discharge of their train operation responsibilities. A railroad that intends to employ train operation event recorder tapes to comply with this monitoring requirement shall indicate in this section how it anticipates determining what person was at the controls and what signal indications or other operational constraints, if any, were applicable to the train's movement.

Section 7 of the Submission: Procedures for Routine Administration of the Engineer Certification Program

The final section of the request must contain a summary of how the railroad's program and procedures will implement the various specific aspects of the regulatory provisions that relate to routine administration of its certification program for locomotive engineers. At a minimum this section needs to address the procedural aspects of the rule's provisions identified in the following paragraph.

Section 240.109 provides that each railroad must have procedures for review and comment on adverse prior safety conduct, but allows the railroad to devise its own system within generalized parameters. Sections 240.115, 240.117 and 240.119 require a railroad to have procedures for evaluating data concerning prior safety conduct as a motor vehicle operator and as railroad workers, yet leave selection of many details to the railroad. Sections 240.203, 240.217, and 240.219 place a duty on the railroad to make a series of determinations but allow the railroad to select what procedures it will employ to assure that all of the necessary determinations have been made in a timely fashion; who will be authorized to conclude that person is or is not qualified; and how it will communicate adverse decisions. Documentation of the factual basis the railroad relied on in making determinations under §§240.205, 240.207, 240.209, 240.211, and 240.213 is required, but these sections permit the railroad to select the procedures it will employ to accomplish compliance with these provisions. Sections 240.225 and 240.227 permit reliance on qualification determinations made by other entities and permit a railroad latitude in selecting the procedures it will employ to assure compliance with these provisions. Similarly, §240.229 permits use of railroad selected procedures to meet the requirements for certification of engineers performing service in joint operations territory. Sections 240.301 and 240.307 allow a railroad a certain degree of discretion in complying with the requirements for replacing lost certificates or the conduct of certification revocation proceedings.

This section of the request should outline in summary fashion the manner in which the railroad will implement its program so as to comply with the specific aspects of each of the rule's provisions described in preceding paragraph.

FRA Review

The submissions made in conformity with this appendix will be deemed approved within 30 days after the required filing date or

the actual filing date whichever is later. No formal approval document will be issued by FRA. The brief interval for review reflects FRA's judgment that railroads generally already have existing programs that will meet the requirements of this part. FRA has taken the responsibility for notifying a railroad when it detects problems with the railroad's program. FRA retains the right to disapprove a program that has obtained approval due to the passage of time as provided for in section § 240.103.

FRA initially proposed specifying the details for most aspects of the programs being submitted under this appendix. The proposed rule contained a distillation of the essential elements of pre-existing training, testing, evaluating, and monitoring programs that appear to result in railroads having locomotive engineers who operate locomotives and trains safely. The proposal contained very specific details for each aspect of the program that appeared to contribute to that result. Those details included such things as the duration of classes intended to teach operating rules as well as the interval and methodology for acquiring familiarization with physical characteristics of an engineer's operational territory. Railroads commenting on the proposed rule did not question the validity of the FRA's views concerning the essential elements of an effective program but did convince FRA that they should be given more discretion to formulate the design of their individual programs.

Rather than establish rigid requirements for each element of the program as initially proposed, FRA has given railroads discretion to select the design of their individual programs within a specified context for each element. The proposed rule, however, provides a good guide to the considerations that should be addressed in designing a program that will meet the performance standards of this final rule. In reviewing program submissions, FRA will focus on the degree to which a particular program deviates from the norms identified in its proposed rule. To the degree that a particular program submission materially deviates from the norms set out in its proposed rule which was published in the FEDERAL REGISTER on December 11, 1989 (54 FR 50890), FRA's review and approval process will be focused on determining the validity of the reasoning relied on by a railroad for selecting its alternative approach and the degree to which the alternative approach is likely to be effective in producing locomotive engineers who have the knowledge, skill, and ability to safely operate trains.

APPENDIX C TO PART 240—PROCEDURES FOR OBTAINING AND EVALUATING MOTOR VEHICLE DRIVING RECORD DATA

The purpose of this appendix is to outline the procedures available to individuals and railroads for complying with the requirements of section 4(a) of the Railroad Safety Improvement Act of 1988 and §§ 240.109, 240.111 and 240.205 of this part. Those provisions require that railroads consider the motor vehicle driving record of each person prior to issuing him or her certification or recertification as a qualified locomotive engineer.

To fulfill that obligation, a railroad must review a certification candidate's recent motor vehicle driving record. Generally, that will be a single record on file with the state agency that issued the candidate's current license. However, it can include multiple records if the candidate has been issued a motor vehicle driving license by more than one state agency. In addition, the railroad must determine whether the certification candidate is listed in the National Driver Register and, if so listed, to review the data that caused the candidate to be so listed.

Access to State Motor Vehicle Driving Record Data

The right of railroad workers, their employers, or prospective employers to have access to a state motor vehicle licensing agency's data concerning an individual's driving record is controlled by state law. Although many states have mechanisms through which employers and prospective employers such as railroads can obtain such data, there are some states in which privacy concerns make such access very difficult or impossible. Since individuals generally are entitled to obtain access to driving record data that will be relied on by a state motor vehicle licensing agency when that agency is taking action concerning their driving privileges, FRA places responsibility on individuals, who want to serve as locomotive engineers to request that their current state drivers licensing agency or agencies furnish such data directly to the railroad considering certifying them as a locomotive operator. Depending on the procedures adopted by a particular state agency, this will involve the candidate's either sending the state agency a brief letter requesting such action or executing a state agency form that accomplishes the same effect. It will normally involve payment of a nominal fee established by the state agency for such a records check. In rare instances, when a certification candidate has been issued multiple licenses, it may require more than a single request.

The National Driver Register

In addition to seeking an individual state's data, each engineer candidate is required to request that a search and retrieval be performed of any relevant information concerning his or her driving record contained in the National Driver Register. The National Driver Register (NDR) is a system of information created by Congress in 1960. In essence it is a nationwide repository of information on problem drivers that was created in an effort to protect motorists. It is a voluntary State/Federal cooperative program that assists motor vehicle driver licensing agencies in gaining access to data about actions taken by other state agencies concerning an individual's motor vehicle driving record. The NDR is designed to address the problem that occurs when chronic traffic law violators, after losing their license in one State travel to and receive licenses in another State. Currently the NDR is maintained by the National Highway Traffic Safety Administration (NHTSA) of the Department of Transportation under the provisions of the National Driver Register Act (23 U.S.C. 401 note). Under that statute, state motor vehicle licensing authorities voluntarily notify NHTSA when they take action to deny, suspend, revoke or cancel a person's motor vehicle driver's license and, under the provisions of a 1982 change to the statute, states are also authorized to notify NHTSA concerning convictions for operation of a motor vehicle while under the influence of, or impaired by, alcohol or a controlled substance, and for traffic violations arising in connection with a fatal traffic accident, reckless driving or racing on the highway even if these convictions do not result in an immediate loss of driving privileges.

The information submitted to NHTSA contains, at a minimum, three specific pieces of data: the identification of the state authority providing the information, the name of the person whose license is being affected, and the date of birth of that person. It may be supplemented by data concerning the person's height, weight, color of eyes, and social security account number, if a State collects such data.

Access to NDR Data

Essentially only individuals and state licensing agencies can obtain access to the NDR data. Since railroads have no direct access to the NDR data, FRA requires that individuals seeking certification as a locomotive engineer request that an NDR search be performed and direct that the results be furnished to the railroad. FRA requires that each person request the NDR information directly from NHTSA unless the prospective operator has a motor vehicle driver license issued by a state motor vehicle licensing agency that is ''participating'' under the provisions of the National Driver Register Act of 1982. Participating states can directly access the NDR data on behalf of the prospective engineer. The state agencies that currently are authorized to access NDR data in that manner are identified in appendix D of this regulation.

Requesting NHTSA To Perform the NDR Check

The procedures for requesting NHTSA performance of an NDR check are as follows:

1. Each person shall submit a written request to National Highway Traffic Safety Administration at the following address: Chief, National Driver Register, National Highway Traffic Safety Administration, 400 Seventh Street, SW., Washington, DC 20590.

2. The request must contain:

(a) The full legal name;

(b) Any other names used by the person (*e.g.*, nickname or professional name);

(c) The date of birth;

(d) Sex;

(e) Height;

(f) Weight;

(g) Color of eyes;

(h) Driver's license number (unless that is not available).

3. The request must authorize NHTSA to perform the NDR check and to furnish the results of the search directly to the railroad.

4. The request must identify the railroad to which the results are to be furnished, including the proper name of the railroad, and the proper mailing address of the railroad.

5. The person seeking to become a certified locomotive engineer shall sign the request, and that signature must be notarized.

FRA requires that the request be in writing and contain as much detail as is available to improve the reliability of the data search. Any person may supply additional information to that being mandated by FRA. Furnishing additional information, such as the person's Social Security account number, will help to more positively identify any records that may exist concerning the requester. Although no fee is charged for such NDR checks, a minimal cost may be incurred in having the request notarized. The requirement for notarization is designed to ensure that each person's right to privacy is being respected and that records are only being disclosed to legally authorized parties.

Requesting a State Agency To Perform the NDR Check

As discussed earlier in connection with obtaining data compiled by the state agency itself, a person can either write a letter to that agency asking for the NDR check or can use the agency's forms for making such a request. If a request is made by letter the individual must follow the same procedures required when directly seeking the data from NHTSA. At present there are only a limited

number of state licensing agencies that have the capacity to make a direct NDR inquiry of this nature. It is anticipated that the number of states with such capability will increase in the near future; therefore, FRA will continue to update the identification of such states by revising appendix D to this regulation to identify such state agencies. Since it would be more efficient for a prospective locomotive engineer to make a single request for both aspects of the information required under this rule, FRA anticipates that state agency inquiry will eventually become the predominant method for making these NDR checks. Requests to state agencies may involve payment of a nominal fee established by the state agency for such a records check.

State agencies normally will respond in approximately 30 days or less and advise whether there is or is not a listing for a person with that name and date of birth. If there is a potential match and the inquiry state was not responsible for causing that entry, the agency normally will indicate in writing the existence of a probable match and will identify the state licensing agency that suspended, revoked or canceled the relevant license or convicted the person of one of the violations referenced earlier in this appendix.

Actions When a Probable NDR Match Occurs

The response provided after performance of an NDR check is limited to either a notification that no potential record match was identified or a notification that a potential record match was identified. If the latter event occurs, the notification will include the identification of the state motor vehicle licensing authority which possesses the relevant record. If the NDR check results indicate a potential match and that the state with the relevant data is the same state which furnished detailed data (because it had issued the person a driving license), no further action is required to obtain additional data. If the NDR check results indicate a potential match and the state with the relevant data is different from the state which furnished detailed data, it then is necessary to contact the individual state motor vehicle licensing authority that furnished the NDR information to obtain the relevant record. FRA places responsibility on the railroad to notify the engineer candidate and on the candidate to contact the state with the relevant information. FRA requires the certification candidate to write to the state licensing agency and request that the agency inform the railroad concerning the person's driving record. If required by the state agency, the person may have to pay a nominal fee for providing such data and may have to furnish written evidence that the prospective operator consents to the release of the data to the railroad. FRA does not require that a railroad or a certification candidate go beyond these efforts to obtain the information in the control of such a state agency, and a railroad may act upon the pending certification without the data if an individual state agency fails or refuses to supply the records.

If the non-issuing state licensing agency does provide the railroad with the available records, the railroad must verify that the record pertains to the person being considered for certification. It is necessary to perform this verification because in some instances only limited identification information is furnished for use in the NDR and this might result in data about a different person being supplied to the railroad. Among the available means for verifying that the additional state record pertains to the certification candidate are physical description, photographs and handwriting comparisons.

Once the railroad has obtained the motor vehicle driving record which, depending on the circumstance, may consist of more than two documents, the railroad must afford the prospective engineer an opportunity to review that record and respond in writing to its contents in accordance with the provisions of §240.219. The review opportunity must occur before the railroad evaluates that record. The railroad's required evaluation and subsequent decision making must be done in compliance with the provisions of this part.

APPENDIX D TO PART 240—IDENTIFICATION OF STATE AGENCIES THAT PERFORM NATIONAL DRIVER REGISTER CHECKS

Under the provisions of §240.111 of this part, each person seeking certification or recertification as a locomotive operator must request that a check of the National Driver Register (NDR) be conducted and that the resulting information be furnished to his or her employer or prospective employer. Under the provisions of paragraphs (d) and (e) of §240.111, each person seeking certification or recertification as a locomotive engineer must request that National Highway Traffic Safety Administration conduct the NDR check, unless he or she was issued a motor vehicle driver license by one of the state agencies identified in this appendix. If the certification candidate received a license from one of the designated state agencies, he or she must request the state agency to perform the NDR check. The state motor vehicle licensing agencies listed in this appendix participate in a program that authorizes these state agencies, in accordance with the National Driver Register Act of 1982, to obtain information from the NDR on behalf of individuals seeking data about themselves.

Since these state agencies can more efficiently supply the desired data and, in some instances, can provide a higher quality of information, FRA requires that certification candidates make use of this method in preference to directly contacting NHTSA.

Although the number of state agencies that participate in this manner is limited, FRA anticipates that an increasing number of states will do so in the future. This appendix will be revised periodically to reflect current participation in the program. As of December 31, 1989, the motor vehicle licensing agencies of the following states participate under the provisions of the 1982 changes to the NDR Act: North Dakota, Ohio, Virginia, and Washington.

APPENDIX E TO PART 240—RECOMMENDED PROCEDURES FOR CONDUCTING SKILL PERFORMANCE TESTS

FRA requires (see §240.127 and §240.211) that locomotive engineers be given a skill performance test prior to certification or recertification and establishes certain criteria for the conduct of that test. Railroads are given discretion concerning the manner in which to administer the required testing. FRA has afforded railroads this discretion to allow individual railroad companies latitude to tailor their testing procedures to the specific operational realities. This appendix contains FRA's recommendations for the administration of skill performance testing that occurs during operation of an actual train. It can be modified to serve in instances where a locomotive simulator is employed for testing purposes. These recommended practices, if followed, will ensure a more thorough and systematic assessment of locomotive engineer performance.

The Need for a Systematic Approach

There are numerous criteria that should be monitored when a designated supervisor of locomotive engineers is observing a person to determine whether that individual should be certified or recertified as a qualified locomotive engineer. The details of those criteria will vary for the different classes of service, types of railroads, and terrain over which trains are being operated. At a minimum, the attention of a designated supervisor of locomotive engineers should concentrate on several general areas during any appraisal. Compliance with the railroad's operating rules, including its safety directives and train handling rules, and compliance with Federal regulations should be carefully monitored. But, in order to effectively evaluate employees, it is necessary to have something against which to compare their performance. In order to hold a locomotive engineer accountable for compliance, a railroad must have adequate operating, safety and train handling rules. Any railroad that fails to have adequate operating, safety, or train handling rules will experience difficulty in establishing an objective method of measuring an individual's skill level. Any railroad that requires the evaluation of an individual's performance relative to its train handling rules needs to have established preferred operating ranges for throttle use, brake application, and train speed. The absence of such criteria results in the lack of a meaningful yardstick for the designated supervisor of locomotive engineers to use in measuring the performance of locomotive engineers. It also is essential to have a definite standard so that the engineer and any reviewing body can know what the certification candidate is being measured against.

Evaluating the performance of certain train operation skills will tend to occur in all situations. For example, it would be rare for a designated supervisor of locomotive engineers to observe any operator for a reasonable period of time and not have some opportunity to review that engineer's compliance with some basic safety rules, compliance with basic operating rules, and performance of a brake test. As the complexity of the operation increases, so does the number of items that the operator must comply with. Higher speeds, mountainous terrain, and various signal systems place increased emphasis on the need for operator compliance with more safety, operating, and train handling rules. Accounting for such variables in any universal monitoring scheme immediately results in a fairly complex system.

FRA therefore recommends that designated supervisors of locomotive engineers employ a written aid to help record events and procedures that as a minimum should be observed for when conducting a skills performance test. FRA is providing the following information to assist railroads in developing such a written aid so as to ensure meaningful testing. When conducting a skills performance test, a designated supervisor of locomotive engineers should be alert to the following:

—Does the employee have the necessary books (Operating Rules, Safety Rules, Timetable, etc.)?
—Are predeparture inspections properly conducted (Radio, Air Brake Tests, Locomotive, etc.)?
—Does the employee comply with applicable safety rules?
—Does the employee read the bulletins, general orders, etc.?
—Enroute, does the employee:
  —Comply with applicable Federal Rules?
  —Monitor gauges?
  —Properly use the horn, whistle, headlight?
  —Couple to cars at a safe speed?

—Properly control in train slack and buff forces?
—Properly use the train braking systems?
—Comply with speed restrictions?
—Display familiarity with the physical characteristics?
—Comply with signal indications?
—Respond properly to unusual conditions?
—At the conclusion of the trip, does the employee:
—Apply a hand brake to the locomotives?
—Properly report locomotive defects?

Obviously, the less sophisticated the railroad's operations are, the fewer the number of identified practices that would be relevant. Hence, this list should modified accordingly.

The Need for Objectivity, Use of Observation Form

It is essential that railroads conduct the performance skills testing in the most objective manner possible, whether this testing is the locomotive engineer's initial qualification testing or periodic retesting. There will always be some potential for the subjective views, held by the designated supervisor of locomotive engineers conducting the testing, to enter into evaluations concerning the competency of a particular individual to handle the position of locomotive engineer. Steps can be taken, and need to be taken, to minimize the risk that personality factors adversely influence the testing procedure.

One way to reduce the entry of subjective matters into the qualification procedures is through the use of a document that specifies those criteria that the designated supervisor of locomotive engineers is to place emphasis on. The use of an observation form will reduce but not eliminate subjectivity. Any skill performance test will contain some amount of subjectivity. While compliance with the operating rules or the safety rules is clear in most cases, with few opportunities for deviation, train handling offers many options with few absolute right answers. The fact that an engineer applies the train air brakes at one location rather than a few yards away does not necessarily indicate a failure but a question of judgment. The use of dynamic braking versus air brakes at a particular location may be a question of judgment unless the carrier has previously specified the use of a preferred braking method. In any case the engineer's judgment, to apply or not apply a braking system at a given location, is subject to the opinion of the designated supervisor of locomotive engineers.

A railroad should attempt to reduce or eliminate such subjectivity through use of some type of observation or evaluation. For railroads developing any evaluation form, the areas of concern identified earlier will not be relevant in all instances. Railroads that do not have sophisticated operations would only need a short list of subjects. For example, most smaller railroads would not require line items pertaining to compliance with signal rule compliance or the use of dynamic brakes. Conversely, in all instances the observation forms should include the time and location that the observer started and ended the observation. FRA believes that there should be a minimum duration for all performance skills examinations. FRA allows railroads to select a duration appropriate for their individual circumstances, requiring only that the period be ''of sufficient length to effectively evaluate the person.'' In exercising its discretion FRA suggests that the minimums selected by a railroad be stated in terms of a distance since the examination has to be of a sufficient duration to adequately monitor the operator's skills in a variety of situations. FRA also suggests that the format for the observation form include a space for recording the observer's comments. Provision for comments ideally would allow for the inclusion of ''constructive criticism'' without altering the import of the evaluation and would permit subjective comments where merited.

APPENDIX F TO PART 240—MEDICAL STANDARDS GUIDELINES

(1) The purpose of this appendix is to provide greater guidance on the procedures that should be employed in administering the vision and hearing requirements of §§240.121 and 240,207.

(2) In determining whether a person has the visual acuity that meets or exceeds the requirements of this part, the following testing protocols are deemed acceptable testing methods for determining whether a person has the ability to recognize and distinguish among the colors used as signals in the railroad industry. The acceptable test methods are shown in the left hand column and the criteria that should be employed to determine whether a person has failed the particular testing protocol are shown in the right hand column.

Accepted tests	Failure criteria
PSEUDOISOCHROMATIC PLATE TESTS	
American Optical Company 1965	5 or more errors on plates 1–15.
AOC—Hardy-Rand-Ritter plates—second edition	Any error on plates 1–6 (plates 1–4 are for demonstration—test plate 1 is actually plate 5 in book)
Dvorine—Second edition	3 or more errors on plates 1–15

Accepted tests	Failure criteria
Ishihara (14 plate)	2 or more errors on plates 1–11.
Ishihara (16 plate)	2 or more errors on plates 1–8.
Ishihara (24 plate)	3 or more errors on plates 1–15.
Ishihara (38 plate)	4 or more errors on plates 1–21.
Richmond Plates 1983	5 or more errors on plates 1–15.
MULTIFUNCTION VISION TESTER	
Keystone Orthoscope	Any error.
OPTEC 2000	Any error.
Titmus Vision Tester	Any error.
Titmus II Vision Tester	Any error.

(3) In administering any of these protocols, the person conducting the examination should be aware that railroad signals do not always occur in the same sequence and that ''yellow signals'' do not always appear to be the same. It is not acceptable to use ''yarn'' or other materials to conduct a simple test to determine whether the certification candidate has the requisite vision. No person shall be allowed to wear chromatic lenses during an initial test of the person's color vision; the initial test is one conducted in accordance with one of the accepted tests in the chart and §240.121(c)(3).

(4) An examinee who fails to meet the criteria in the chart, may be further evaluated as determined by the railroad's medical examiner. Ophthalmologic referral, field testing, or other practical color testing may be utilized depending on the experience of the examinee. The railroad's medical examiner will review all pertinent information and, under some circumstances, may restrict an examinee who does not meet the criteria from operating the train at night, during adverse weather conditions or under other circumstances. The intent of §240.121(e) is not to provide an examinee with the right to make an infinite number of requests for further evaluation, but to provide an examinee with at least one opportunity to prove that a hearing or vision test failure does not mean the examinee cannot safely operate a locomotive or train. Appropriate further medical evaluation could include providing another approved scientific screening test or a field test. All railroads should retain the discretion to limit the number of retests that an examinee can request but any cap placed on the number of retests should not limit retesting when changed circumstances would make such retesting appropriate. Changed circumstances would most likely occur if the examinee's medical condition has improved in some way or if technology has advanced to the extent that it arguably could compensate for a hearing or vision deficiency.

(5) Engineers who wear contact lenses should have good tolerance to the lenses and should be instructed to have a pair of corrective glasses available when on duty.

[64 FR 60996, Nov. 8, 1999]

PART 241—UNITED STATES LOCATIONAL REQUIREMENT FOR DISPATCHING OF UNITED STATES RAIL OPERATIONS

Sec.
241.1 Purpose and scope.
241.3 Application and responsibility for compliance.
241.5 Definitions.
241.7 Waivers.
241.9 Prohibition against extraterritorial dispatching; exceptions.
241.11 Prohibition against conducting a railroad operation dispatched by an extraterritorial dispatcher; exceptions.
241.13 Prohibition against track owner's requiring or permitting use of its line for a railroad operation dispatched by an extraterritorial dispatcher; exceptions.
241.15 Penalties and other consequences for noncompliance.
241.17 Preemptive effect.
241.19 Information collection.
APPENDIX A TO PART 241—LIST OF LINES BEING EXTRATERRITORIALLY DISPATCHED IN ACCORDANCE WITH THE REGULATIONS CONTAINED IN 49 CFR PART 241, REVISED AS OF OCTOBER 1, 2002
APPENDIX B TO PART 241—SCHEDULE OF CIVIL PENALTIES
APPENDIX C TO PART 241—GEOGRAPHICAL BOUNDARIES OF FRA'S REGIONS AND ADDRESSES OF FRA'S REGIONAL HEADQUARTERS

AUTHORITY: 49 U.S.C. 20103, 20107, 21301, 21304, 21311; 28 U.S.C. 2461, note; 49 CFR 1.49.

SOURCE: 67 FR 75960, Dec. 10, 2002, unless otherwise noted.

§241.1 Purpose and scope.

(a) The purpose of this part is to prevent railroad accidents and incidents, and consequent injuries, deaths, and

property damage, that would result from improper dispatching of railroad operations in the United States by individuals located outside of the United States.

(b) This part prohibits extraterritorial dispatching of railroad operations, conducting railroad operations that are extraterritorially dispatched, and allowing track to be used for such operations, subject to certain stated exceptions. This part does not restrict a railroad from adopting and enforcing additional or more stringent requirements not inconsistent with this part.

§ 241.3 Application and responsibility for compliance.

(a) Except as provided in paragraph (b) of this section, this part applies to all railroads.

(b) This part does not apply to—

(1) A railroad that operates only on track inside an installation that is not part of the general railroad system of transportation; or

(2) Rapid transit operations in an urban area that are not connected to the general railroad system of transportation.

(c) Although the duties imposed by this part are generally stated in terms of a duty of a railroad, each person, including a contractor for a railroad, who performs a function covered by this part, shall perform that function in accordance with this part.

§ 241.5 Definitions.

As used in this part:

Administrator means the Administrator of the Federal Railroad Administration or the Administrator's delegate.

Dispatch means—

(1) To perform a function that would be classified as a duty of a ''dispatching service employee,'' as that term is defined by the hours of service laws at 49 U.S.C. 21101(2), if the function were to be performed in the United States. For example, to *dispatch* means, by the use of an electrical or mechanical device—

(i) To control the movement of a train or other on-track equipment by the issuance of a written or verbal authority or permission affecting a railroad operation, or by establishing a route through the use of a railroad signal or train control system but not merely by aligning or realigning a switch; or

(ii) To control the occupancy of a track by a roadway worker or stationary on-track equipment, or both; or

(iii) To issue an authority for working limits to a roadway worker.

(2) The term *dispatch* does not include the action of personnel in the field—

(i) Effecting implementation of a written or verbal authority or permission affecting a railroad operation or an authority or permission affecting a railroad operation or an authority for working limits to a roadway worker (*e.g.*, initiating an interlocking timing device, authorizing a train to enter working limits); or

(ii) Operating a function of a signal system designed for use by those personnel.

Dispatcher means any individual who dispatches.

Emergency means an unexpected and unforeseeable event or situation that affects a railroad's ability to use a dispatcher in the United States to dispatch a railroad operation in the United States and that, absent the railroad's use of an extraterritorial dispatcher to dispatch the railroad operation, would either materially disrupt rail service or pose a substantial safety hazard.

Employee means an individual who is engaged or compensated by a railroad or by a contractor to a railroad to perform any of the duties defined in this part.

Extraterritorial dispatcher means a dispatcher who, while located outside of the United States, dispatches a railroad operation that occurs in the United States.

Extraterritorial dispatching means the act of dispatching a railroad operation that occurs on trackage in the United States by a dispatcher located outside of the United States.

Fringe border dispatching means the act of extraterritorial dispatching a railroad operation that occurs on trackage in the United States immediately adjacent to the border between the United States and Canada or the

border between the United States and Mexico by a dispatcher who is a railroad employee located in Canada or Mexico.

FRA means the Federal Railroad Administration, United States Department of Transportation.

Movement of a train means the movement of one or more locomotives coupled with or without cars, requiring an air brake test in accordance with part 232 or part 238 of this chapter, except during switching operations or where the operation is that of classifying and assembling rail cars within a railroad yard for the purpose of making or breaking up trains.

Occupancy of a track by a roadway worker or stationary on-track equipment or both refers to the physical presence of a roadway worker or stationary on-track equipment, or both, on a track for the purpose of making an inspection, repair, or another activity not associated with the movement of a train or other on-track equipment.

Person means an entity of a type covered under 1 U.S.C. 1, including but not limited to the following: a railroad; a manager, supervisor, official, or other employee or agent of a railroad; an owner, manufacturer, lessor, or lessee of railroad equipment, track, or facilities; an independent contractor providing goods or services to a railroad; and an employee of such owner, manufacturer, lessor, lessee, or independent contractor.

Railroad means any form of non-highway ground transportation that runs on rails or electromagnetic guideways and any person providing such transportation, including—

(1) Commuter or other short-haul railroad passenger service in a metropolitan or suburban area and commuter railroad service that was operated by the Consolidated Rail Corporation on January 1, 1979; and

(2) High speed ground transportation systems that connect metropolitan areas, without regard to whether those systems use new technologies not associated with traditional railroads; but does not include rapid transit operations in an urban area that are not connected to the general railroad system of transportation.

Railroad contractor means a contractor to a railroad or a subcontractor to a contractor to a railroad.

Railroad operation means the movement of a train or other on-track equipment (other than on-track equipment used in a switching operation or where the operation is that of classifying and assembling rail cars within a railroad yard for the purpose of making or breaking up a train), or the activity that is the subject of an authority issued to a roadway worker for working limits.

Roadway worker means any employee of a railroad, or of a contractor to a railroad, whose duties include inspection, construction, maintenance, or repair of railroad track, bridges, roadway, signal and communication systems, electric traction systems, roadway facilities, or roadway maintenance machinery on or near track or with the potential of fouling a track, and flagmen and watchmen/lookouts.

State means a State of the United States of America or the District of Columbia.

United States means all of the States.

Working limits means a segment of track with definite boundaries established in accordance with part 214 of this chapter upon which trains and engines may move only as authorized by the roadway worker having control over that defined segment of track. Working limits may be established through ''exclusive track occupancy,'' ''inaccessible track,'' ''foul time,'' or ''train coordination'' as defined in part 214 of this chapter.

§ 241.7 Waivers.

(a) *General.* (1) A person subject to a requirement of this part may petition the Administrator for a waiver of compliance with such requirement. Except as provided in paragraph (b) of this section, the filing of such a petition does not affect that person's responsibility for compliance with that requirement while the petition is being considered.

(2) (i) Each petition for waiver under this section shall be filed in the manner and contain the information required by part 211 of this chapter.

(ii) Petitions seeking approval to conduct fringe border operations shall

also comply with the requirements of paragraph (c) of this section.

(iii) Petitioners not filing under paragraph (c) of this section should review the guidelines at 66 FR 63942 (Dec. 11, 2001), and frame their petitions to address the safety and security concerns articulated in the preamble, or contact the Office of the Chief Counsel, RCC–12, FRA, 1120 Vermont Avenue, NW., Stop 10, Washington, DC 20590, for a copy of the guidelines.

(3) If the Administrator finds that a waiver of compliance is in the public interest and is consistent with railroad safety, the Administrator may grant the waiver subject to any conditions that the Administrator deems necessary.

(b) *Special dispensation for existing extraterritorial dispatching.* (1) A railroad that files a waiver request seeking to continue extraterritorial dispatch of an operation that it has dispatched from Canada or Mexico pursuant to regulations contained in 49 CFR part 241, revised as of October 1, 2002, may continue extraterritorial dispatching of that operation until the railroad's waiver request is acted upon by FRA if the petition is filed no later than April 11, 2003.

(2) If the waiver request is for an operation not listed in appendix A to this part, the waiver request must describe when the extraterritorial dispatching of the operation commenced and how the dispatching was authorized by regulations contained in 49 CFR part 241, revised as of October 1, 2002. FRA will notify the railroad if FRA determines that the operation was not permitted by the terms of those regulations.

(c) *Fringe border dispatching.* (1) A waiver request to have a railroad employee located in Canada or in Mexico dispatch a railroad operation in the United States immediately adjacent to the border of the country in which the dispatcher conducts the dispatching will generally be approved by FRA, subject to any conditions imposed by FRA, if the waiver request meets all of the terms of paragraphs (c)(2) and (3) of this section. A proponent of a waiver request may seek relief from the terms of paragraphs (c)(2) and (3) of this section.

(2) The railroad proposing to conduct the fringe border dispatching shall supply the following documents as part of the waiver request:

(i) A description, by railroad division, applicable subdivision(s), and mileposts, of the line proposed to be dispatched;

(ii) A copy of the operating rules of the railroad that would apply to the proposed fringe border dispatching, including hours of service limitations, and the railroad's program for testing the dispatchers in accordance with these operating rules and for ensuring that the dispatchers do not work in excess of the hours of service restrictions;

(iii) A copy of the railroad's drug and alcohol abuse prevention program that applies to the fringe border dispatchers. The program shall, to the extent permitted by the laws of the country where the dispatching occurs, contain the following:

(A) Preemployment drug testing;

(B) A general prohibition on possession and use of alcohol and drugs while on duty;

(C) Reasonable cause alcohol and drug testing;

(D) A policy dealing with co-worker and self-reporting of alcohol and drug abuse problems;

(E) Post-accident testing; and

(F) Random drug testing;

(iv) The steps the railroad has taken to ensure the security of the dispatch center where the fringe border dispatching will take place;

(v) The railroad's plans for complying with the requirements of paragraph (c)(3) of this section; and

(vi) A verification from a government agency in the country where the dispatching will occur that the agency has safety jurisdiction over the railroad and the proposed dispatching, and that the railroad's safety programs referenced in paragraphs (c)(2)(ii) and (iii) of this section meet the safety requirements established by the agency or, in the absence of established safety requirements, that the programs are satisfactory to the agency.

(3) Except as otherwise approved by FRA, fringe border dispatching must comply with the following requirements:

(i) The trackage in the United States being extraterritorially dispatched shall not exceed the following route miles, measured from the point that the trackage crosses the United States border:

(A) For operations conducted pursuant to the regulations contained in 49 CFR part 241, revised as of October 1, 2002, the route miles shall be the miles normally operated by the railroad in conducting the operation; and

(B) For all other operations, the route miles shall not exceed five miles.

(ii) Except for unforeseen circumstances such as equipment failure, accident, casualty, or incapacitation of a crew member, each extraterritorially dispatched train shall be under the control of the same assigned crew for the entire trip over the extraterritorially dispatched trackage.

(iii) The fringe border dispatcher shall communicate instructions to the train crew and maintenance of way employees working on the line in the English language and, when referencing units of measurement, shall use English units of measurement.

(iv) The rail line shall be under the exclusive control of a single dispatching district or desk; and

(v) The dispatching of the train shall be transferred from the fringe border dispatcher to a dispatcher located in the United States at one of the following locations within the mileage limits mandated in paragraph (c)(3)(i) of this section:

(A) Interchange point;

(B) Signal control point;

(C) Junction of two rail lines;

(D) Established crew change point;

(E) Yard or yard limits location;

(F) Inspection point for U.S. Customs, Immigration and Naturalization Service, Department of Agriculture, or other governmental inspection; or

(G) Location where there is a change in the method of train operations.

§ 241.9 Prohibition against extraterritorial dispatching; exceptions.

(a) *General*. Except as provided in § 241.7(d) and paragraphs (b) and (c) of this section, a railroad subject to this part shall not require or permit a dispatcher located outside the United States to dispatch a railroad operation that occurs in the United States if the dispatcher is employed by the railroad or by a contractor to the railroad.

(b) *Transitional period to continue existing extraterritorial dispatching*. A railroad that has normally extraterritorially dispatched railroad track in the United States from Canada or Mexico pursuant to the regulations contained in 49 CFR part 241, revised as of October 1, 2002, may continue extraterritorial dispatching of that railroad track until April 10, 2003, to permit the railroad an opportunity to file a waiver request pursuant to § 241.7.

(c) *Emergencies*. (1) In an emergency situation, a railroad may require or permit one of its dispatchers located outside the United States to dispatch a railroad operation that occurs in the United States, provided that:

(i) The dispatching railroad notifies the FRA Regional Administrator of each FRA region where the railroad operation was conducted, in writing as soon as practicable, of the emergency; and

(ii) The extraterritorial dispatching is limited to the duration of the emergency.

(2) Written notification may be made either on paper or by electronic mail.

(3) A list of the States that make up the FRA regions and the street and e-mail addresses and fax numbers of the FRA Regional Administrators appears in appendix C to this part.

(d) *Liability*. The Administrator may hold either the railroad that employs the dispatcher or the railroad contractor that employs the dispatcher, or both, responsible for compliance with this section and subject to civil penalties under § 241.15.

§ 241.11 Prohibition against conducting a railroad operation dispatched by an extraterritorial dispatcher; exceptions.

(a) *General*. Except as provided in § 241.5(d) or paragraphs (b) and (c) of this section, a railroad subject to this part shall not conduct, or contract for the conduct of, a railroad operation in the United States that is dispatched from a location outside of the United States.

(b) *Transitional period to continue existing extraterritorial dispatching*. A railroad that has normally conducted, or contracted for the conduct of, a railroad operation in the United States that is extraterritorially dispatched pursuant to the regulations contained in 49 CFR part 241, revised as of October 1, 2002, may continue to conduct or contract for the conduct of the operation until April 10, 2003, to permit the railroad an opportunity to file a waiver request pursuant to § 241.7.

(c) *Emergencies*. (1) In an emergency situation, a railroad may conduct, or contract for the conduct of, a railroad operation in the United States that is dispatched from a location outside the United States, provided that:

(i) The dispatching railroad notifies the FRA Regional Administrator of each FRA region where the railroad operation was conducted, in writing as soon as practicable, of the emergency; and

(ii) The extraterritorial dispatching is limited to the duration of the emergency.

(2) Written notification may be made either on paper or by electronic mail.

(3) A list of the States that make up the FRA regions and the street and e-mail addresses and fax numbers of the FRA Regional Administrators appears in appendix C to this part.

(d) *Liability*. The Administrator may hold either the railroad that conducts the railroad operation or the railroad contractor that conducts the operation, or both, responsible for compliance with this section and subject to civil penalties under § 241.15.

§ 241.13 Prohibition against track owner's requiring or permitting use of its line for a railroad operation dispatched by an extraterritorial dispatcher; exceptions.

(a) *General*. Except as provided in paragraphs (b) and (c) of this section, an owner of railroad track located in the United States shall not require or permit the track to be used for a railroad operation that is dispatched from outside the United States.

(b) *Transitional period to continue existing extraterritorial dispatching*. An owner of a track segment located in the United States that is extraterritorially dispatched pursuant to the regulations contained in 49 CFR 241, revised as of October 1, 2002, may require or permit the track segment to be continued to be used for a railroad operation that is extraterritorially dispatched until April 10, 2003, to permit the railroad an opportunity to file a waiver request pursuant to § 241.7.

(c) *Emergencies*. In an emergency situation, an owner of railroad track located in the United States may require or permit the track to be used for a railroad operation that is dispatched from outside the United States, provided that:

(1) The dispatching railroad notifies the FRA Regional Administrator of each FRA region where the operation was conducted, in writing as soon as practicable, of the emergency and

(2) The extraterritorial dispatching is limited to the duration of the emergency. Written notification may be made either on paper or by electronic mail.

(d) *Liability*. The Administrator may hold either the track owner or the assignee under § 213.5(c) of this chapter (if any), or both, responsible for compliance with this section and subject to civil penalties under § 241.15. A common carrier by railroad that is directed by the Surface Transportation Board to provide service over the track in the United States of another railroad under 49 U.S.C. 11123 is considered the owner of that track for the purposes of the application of this section during the period that the directed service order remains in effect.

§ 241.15 Penalties and other consequences for noncompliance.

(a) Any person who violates any requirement of this part or causes the violation of any such requirement is subject to a civil penalty of at least $550 and not more than $16,000 per violation, except that: Penalties may be assessed against individuals only for willful violations, and, where a grossly negligent violation or a pattern of repeated violations has created an imminent hazard of death or injury to persons, or has caused death or injury, a penalty not to exceed $27,000 per violation may be assessed. Each day a violation continues shall constitute a separate offense.

(b) An individual who violates any requirement of this part or causes the violation of any such requirement may be subject to disqualification from safety-sensitive service in accordance with part 209 of this chapter.

(c) A person who knowingly and willfully falsifies a record or report required by this part may be subject to criminal penalties under 49 U.S.C. 21311.

[67 FR 75960, Dec. 10, 2002, as amended at 69 FR 30595, May 28, 2004; 72 FR 51198, Sept. 6, 2007]

§ 241.17 Preemptive effect.

Under 49 U.S.C. 20106, the regulations in this part preempt any State law, regulation, or order covering the same subject matter, except an additional or more stringent law, regulation, or order that is necessary to eliminate or reduce an essentially local safety hazard; is not incompatible with a law, regulation, or order of the United States Government; and does not impose an unreasonable burden on interstate commerce.

§ 241.19 Information collection.

(a) The information collection requirements of this part are being reviewed by the Office of Management and Budget pursuant to the Paperwork Reduction Act of 1995 (44 U.S.C. 3501 *et seq.*).

(b) The information collection requirements are found in the following sections: § 241.7(a), (b), (c); 241.9(c); 241.11(c); 241.13(c); and 214.15. When an effective date for these sections is established, FRA will publish notice of that date in the FEDERAL REGISTER.

APPENDIX A TO PART 241—LIST OF LINES BEING EXTRATERRITORIALLY DISPATCHED IN ACCORDANCE WITH THE REGULATIONS CONTAINED IN 49 CFR PART 241, REVISED AS OF OCTOBER 1, 2002

Description of United States track segment being extraterritorially dispatched	Length of United States' track segment	Railroad conducting the dispatching
Maine: Between Vanceboro, Maine and Brownville Junction, Maine.	99 miles	Eastern Maine Ry. Co.
Michigan:		
U.S. trackage between Windsor, Ontario, and Detroit, Michigan.	1.8 miles	Canadian Pacific Railway Company.
U.S. trackage between Sarnia, Ontario, and Port Huron, Michigan.	3.1 miles	Canadian National Railway Company (CN).
Minnesota: Sprague Subdivision, between Baudette, Minnesota, and International Boundary, Minnesota.	43.8 miles	CN.

APPENDIX B TO PART 241—SCHEDULE OF CIVIL PENALTIES [1]

Section [2]	Violation	Willful violation
241.9(a) Requiring or permitting extraterritorial dispatching of a railroad operation	$7,500	$11,000
(b) Failing to notify FRA about extraterritorial dispatching of a railroad operation in an emergency situation	5,000	7,500
241.11 Conducting a railroad operation that is extraterritorially dispatched:		
(a)(1) Generally	7,500	11,000
(a)(2) In an emergency situation-where dispatching railroad fails to notify FRA of the extraterritorial dispatching	2,500	5,000
241.13 Requiring or permitting track to be used for the conduct of a railroad operation that is extraterritorially dispatched:		
(a)(1) Generally	7,500	11,000
(a)(2) In an emergency situation-where dispatching railroad fails to notify FRA of the extraterritorial dispatching	2,500	5,000

[1] A penalty may be assessed against an individual only for a willful violation. The Administrator reserves the right to assess a penalty of up to $27,000 for any violation where circumstances warrant. See 49 U.S.C. 21301, 21304 and 49 CFR part 209, appendix A.

[2] Further designations for certain provisions, not found in the CFR citation for those provisions, and not found in this Appendix, are FRA Office of Chief Counsel computer codes added as a suffix to the CFR citation and used to expedite imposition of civil penalties for violations. FRA reserves the right, should litigation become necessary, to substitute in its complaint the CFR citation in place of the combined designation cited in the civil penalty demand letter.

APPENDIX C TO PART 241—GEOGRAPHICAL BOUNDARIES OF FRA'S REGIONS AND ADDRESSES OF FRA'S REGIONAL HEADQUARTERS

The geographical boundaries of FRA's eight regions and the addresses for the regional headquarters of those regions are as follows:

(1) *Region 1* consists of Maine, Vermont, New Hampshire, New York, Massachusetts, Rhode Island, Connecticut, and New Jersey. The mailing address of the Regional Headquarters is: 55 Broadway, Room 1077, Cambridge, Massachusetts 02142. The fax number is 617–494–2967. The electronic mail (E-mail) address of the Regional Administrator for Region 1 is: *Mark.McKeon@fra.dot.gov*.

(2) *Region 2* consists of Pennsylvania, Delaware, Maryland, Ohio, West Virginia, Virginia, and Washington, DC. The mailing address of the Regional Headquarters is: Two International Plaza, Suite 550, Philadelphia, Pennsylvania 19113. The fax number is 610–521–8225. The E-mail address of the Regional Administrator for Region 2 is: *David.Myers@fra.dot.gov*.

(3) *Region 3* consists of Kentucky, Tennessee, North Carolina, South Carolina, Georgia, Alabama, Mississippi, and Florida. The mailing address of the Regional Headquarters is: Atlanta Federal Center, 61 Forsythe Street, SW., Suite 16T20, Atlanta, Georgia 30303. The fax number is 404–562–3830. The E-mail address of the Regional Administrator for Region 3 is: *Fred.Dennin@fra.dot.gov*.

(4) *Region 4* consists of Minnesota, Wisconsin, Michigan, Illinois, and Indiana. The mailing address of the Regional Headquarters is: 300 West Adams Street, Rm 310, Chicago, Illinois 60606. The fax number is 312–886–9634. The E-mail address of the Regional Administrator for Region 4 is: *Laurence.Hasvold@fra.dot.gov*.

(5) *Region 5* consists of New Mexico, Oklahoma, Arkansas, Louisiana and Texas. The mailing address of the Regional Headquarters is: 4100 International Plaza, Suite 450, Fort Worth, Texas, 76109–4820. The fax number is 817–284–3804. The E-mail address of the Regional Administrator for Region 5 is: *John.Megary@fra.dot.gov*.

(6) *Region 6* consists of Nebraska, Iowa, Colorado, Kansas, and Missouri. The mailing address of the Regional Headquarters is: 911 Locust Street, Suite 464, Kansas City, Missouri 64106. The fax number is 816–329–3867. The E-mail address of the Regional Administrator for Region 6 is: *Darrell.Tisor@fra.dot.gov*.

(7) *Region 7* consists of California, Nevada, Utah, Arizona, and Hawaii. The mailing address of the Regional Headquarters is: 801 I Street, Suite 466, Sacramento, California 95814. The fax number is 916–498–6546. The E-mail address of the Regional Administrator for Region 7 is: *Alvin.Settje@fra.dot.gov*.

(8) *Region 8* consists of Washington, Idaho, Montana, North Dakota, Oregon, Wyoming, South Dakota, and Alaska. The mailing address of the Regional Headquarters is: Murdock Executive Plaza, 703 Broadway, Suite 650, Vancouver, Washington 98660. The fax number is 360–696–7548. The E-mail address of the Regional Administrator for Region 8 is: *Dick.Clairmont@fra.dot.gov*.

[67 FR 75960, Dec. 10, 2002, as amended at 69 FR 30595, May 28, 2004]

PART 244—REGULATIONS ON SAFETY INTEGRATION PLANS GOVERNING RAILROAD CONSOLIDATIONS, MERGERS, AND ACQUISITIONS OF CONTROL

Subpart A—General

Sec.
244.1 Scope, application, and purpose.
244.3 Preemptive effect.
244.5 Penalties.
244.7 Waivers.
244.9 Definitions.

Subpart B—Safety Integration Plans

244.11 Contents of a Safety Integration Plan.
244.13 Subjects to be addressed in a Safety Integration Plan involving an amalgamation of operations.
244.15 Subjects to be addressed in a Safety Integration Plan not involving an amalgamation of operations.
244.17 Procedures.
244.19 Disposition.
244.21 Compliance and Enforcement.
APPENDIX A TO PART 244—SCHEDULE OF CIVIL PENALTIES [RESERVED]

AUTHORITY: 49 U.S.C. 20103, 20107, 21301; 5 U.S.C. 553 and 559; 28 U.S.C. 2461, note; and 49 CFR 1.49.

SOURCE: 67 FR 11604, Mar. 15, 2002, unless otherwise noted.

Subpart A—General

§ 244.1 Scope, application, and purpose.

(a) This part prescribes requirements for filing and implementing a Safety Integration Plan with FRA whenever a Class I railroad proposes to consolidate with, merge with, or acquire control of another Class I railroad, or with a Class II railroad where there is a proposed amalgamation of operations.

(b) The purpose of this part is to achieve a reasonable level of railroad safety during the implementation of transactions described in paragraph (a) of this section. This part does not preclude a railroad from taking additional measures not inconsistent with this part to provide for safety in connection with a transaction.

(c) The requirements prescribed under this part apply only to FRA's disposition of a regulated transaction filed by an applicant. The transactions covered by this part also require separate filing with and approval by the Surface Transportation Board. *See* 49 CFR part 1106.

§ 244.3 Preemptive effect.

Under 49 U.S.C. 20106, issuance of these regulations preempts any State law, regulation, or order covering the same subject matter, except an additional or more stringent law, regulation, or order that:

(a) Is necessary to eliminate or reduce an essentially local safety hazard;

(b) Is not incompatible with a law, regulation, or order of the United States Government; and

(c) Does not unreasonably burden interstate commerce.

§ 244.5 Penalties.

(a) Any person who violates any requirement of this part or causes the violation of any such requirement is subject to a civil penalty of at least $550, but not more than $16,000 per day, except that: Penalties may be assessed against individuals only for willful violations, and, where a grossly negligent violation or a pattern of repeated violations has created an imminent hazard of death or injury to persons, or has caused death or injury, a penalty not to exceed $27,000 per violation may be assessed. Each day a violation continues shall constitute a separate offense.

(b) As specified in § 244.21, FRA may also exercise any of its other enforcement remedies if a railroad fails to comply with § 244.21.

(c) Any person who knowingly and willfully makes a false entry in a record or report required by this part shall be subject to criminal penalties under 49 U.S.C. 21311.

[67 FR 11604, Mar. 15, 2002, as amended at 69 FR 30595, May 28, 2004; 72 FR 51198, Sept. 6, 2007]

§ 244.7 Waivers.

(a) A person subject to a requirement of this part may petition the Administrator for a waiver of compliance with any requirement of this part. The filing of such a petition does not affect that person's responsibility for compliance with that requirement pending action on such a petition.

(b) Each petition for a waiver under this section must be filed in the manner and contain the information required by part 211 of this chapter.

(c) If the Administrator finds that a waiver of compliance is in the public interest and is consistent with railroad safety, the Administrator may grant the waiver subject to any conditions the Administrator deems necessary.

(d) The procedures governing a petition for a waiver that are prescribed under this part apply only to FRA's disposition of such a petition. A person seeking a waiver of a Surface Transportation Board regulation would need to file a petition for a waiver with the Board. (*See* 49 CFR 1106.5.)

§ 244.9 Definitions.

As used in this part—

Administrator means the Administrator of the Federal Railroad Administration or the Administrator's delegate.

Amalgamation of operations means the migration, combination, or unification of one set of railroad operations with another set of railroad operations, including, but not limited to, the allocation of resources affecting railroad operations (*e.g.*, changes in personnel, track, bridges, or communication or signal systems; or use or deployment of maintenance-of-way equipment, locomotives, or freight or passenger cars).

Applicant means a Class I railroad or a Class II railroad engaging in a transaction subject to this part.

Best practices means measures that are tried, tested, and proven to be the safest and most efficient rules or instructions governing railroad operations.

Class I or Class II railroad has the meaning assigned by regulations of the Surface Transportation Board (49 CFR Part 1201; General Instructions 1–1), as those regulations may be revised by the Board (including modifications in class thresholds based on the revenue deflator formula) from time to time.

Corporate culture means the totality of the commitments, written and oral directives, and practices that make up the way a railroad's management and its employees operate their railroad.

Control means actual control, legal control, or the power to exercise control through:

(1) Common directors, officers, stockholders, a voting trust, or a holding or investment company, or

(2) Any other means. *See* 49 U.S.C. 10102.

Consolidation means the creation of a new Class I railroad by combining existing Class I railroads or a Class I railroad and a Class II railroad where there is an amalgamation of operations, or by a railroad or a corporate parent of a Class I railroad taking over the assets or assuming the liabilities, or both, of another Class I railroad such that the resulting unified entity has the combined capital, powers, and subsidiaries and affiliates, if applicable, of all of its constituents.

Environmental documentation means either an Environmental Assessment or Environmental Impact Statement prepared in accordance with the Surface Transportation Board's environmental rules at 49 CFR part 1105.

Merger means the acquisition of one Class I railroad or Class II railroad where there is amalgamation of operations by a Class I railroad such that the acquiring railroad or a corporate parent of that railroad acquires the stock, assets, liabilities, powers, subsidiaries and affiliates of the railroad acquired.

Person means an entity of any type covered under 1 U.S.C. 1, including the following: A railroad; a manager, supervisor, official, or other employee or agent of a railroad; any owner, manufacturer, lessor, or lessee of railroad equipment, track, or facilities; any independent contractor providing goods or services to a railroad; and any employee of such owner, manufacturer, lessor, lessee, or independent contractor.

Railroad means any form of non-highway ground transportation that runs on rails or electromagnetic guideways, including:

(1) Commuter or other short-haul rail passenger service in a metropolitan or suburban area; and

(2) High speed ground transportation systems that connect metropolitan areas, without regard to whether those systems use new technologies not associated with traditional railroads. The term does not include rapid transit operations in an urban area that are not connected to the general railroad system of transportation.

Safety Integration Plan means a comprehensive written plan submitted to and approved by FRA in compliance with this part that demonstrates in required detail how an applicant will provide for safe railroad operations during and after any transaction covered by this part, and otherwise assure compliance with the Federal railroad safety laws.

Section of Environmental Analysis or ''SEA'' means the Section of the Surface Transportation Board that prepares its environmental documentation and analyses.

Transaction means a consolidation, merger, or acquisition of control subject to the requirements of this part.

Subpart B—Safety Integration Plans

§ 244.11 Contents of a Safety Integration Plan.

Each Safety Integration Plan shall contain the following information for each subject matter identified in § 244.13 or § 244.15:

(a) A detailed description of how the applicant differs from each railroad it proposes to acquire or with which the applicant proposes to consolidate or merge, including the rules or instructions governing railroad operations of these railroads;

(b) A detailed description of the proposed manner of operations of the resulting railroad, including a reconciliation of the differing rules or instructions governing railroad operations of

the railroads involved in the transaction;

(c) The measures to be taken to comply with applicable Federal railroad safety laws and regulations;

(d) The proposed specific measures, expressed step-by-step, for each relevant subject matter that the applicant believes will result in safe implementation of the proposed transaction consistent with the requirements of this part;

(e) The allocation of resources, expressed as human and capital resources within designated operating budgets, directed to complete safety-relevant operations subject to the transaction; and

(f) The timetable, targeted in specific terms from commencement to completion, for implementing paragraphs (c), (d) and (e) of this section.

§ 244.13 Subjects to be addressed in a Safety Integration Plan involving an amalgamation of operations.

Each Safety Integration Plan involving an amalgamation of operations shall address the following subjects for railroad operations conducted on property subject to the transaction:

(a) *Corporate culture*. Each applicant shall:

(1) Identify and describe differences for each safety-related area between the corporate cultures of the railroads involved in the transaction;

(2) Describe how these cultures lead to different practices governing rail operations; and

(3) Describe, in step-by-step measures, the integration of these corporate cultures and the manner in which it will produce a system of ''best practices'' when the transaction is implemented.

(b) *Training*. Each applicant shall identify classroom and field courses, lectures, tests, and other educational or instructional forums designed to ensure the proficiency, qualification, and familiarity with the operating rules and operating tasks of territory assigned of the following employees, either when these employees are assigned to a new territory or the operating rules on a given territory are changed:

(1) Employees who perform train and engine service;

(2) Employees who inspect and maintain track and bridges;

(3) Employees who inspect, maintain and repair any type of on-track equipment, including locomotives, passenger cars, and freight cars of all types;

(4) Dispatchers or operators;

(5) Employees who inspect and maintain signal and train control devices and systems;

(6) Hazardous materials personnel, including information technology personnel who affect the transportation of hazardous materials;

(7) Employees who maintain or upgrade communication systems affecting rail operations; and

(8) Supervisors of employees enumerated in paragraphs (b)(1) through (7) of this section.

(c) *Operating practices*—(1) *Operating rules*. Each applicant shall identify the operating rules, timetables, and timetable special instructions to govern railroad operations, including yard or terminal operations and freight or passenger service.

(2) *Alcohol and drug*. Each applicant shall identify the post-accident toxicological testing, reasonable cause testing, and random alcohol and drug testing programs as required under 49 CFR part 219.

(3) *Qualification and certification of locomotive engineers*. Each applicant shall identify the program for qualifying and certifying locomotive engineers under 49 CFR part 240.

(4) *Hours of service laws*. Each applicant shall identify the procedures for complying with the Federal hours of service laws and related measures to minimize fatigue of employees covered by 49 U.S.C. chapter 211.

(d) *Motive power and equipment*. Each applicant shall identify the qualification standards for employees who inspect, maintain, or repair railroad freight or passenger cars and locomotives, and the designated facilities used, or to be used, to repair such equipment.

(e) *Signal and train control*. Each applicant shall identify the signal and train control systems governing railroad operations and maintenance, and

any planned amendments or modifications to capital improvement and research and development projects for signal and train control operations.

(f) *Track Safety Standards and bridge structures.* Each applicant shall identify the maintenance and inspection programs for track and bridges, and the qualification standards for roadway workers.

(g) *Hazardous Materials.* Each applicant shall identify an inspection program covering the following areas:

(1) Field inspection practices;

(2) Hazardous materials communication standards;

(3) Emergency response procedures; and

(4) Information technology systems and personnel employed for transmitting or receiving information accompanying hazardous materials shipments. The inspection program should identify preventive measures that will be employed to respond to potential information technology integration and hazardous materials documentation deficiencies.

(h) *Dispatching operations.* Each applicant shall identify:

(1) The railroad dispatching system to be adopted;

(2) The migration of the existing dispatching systems to the adopted system, if applicable; and

(3) The criteria used to determine workload and duties performed by operators or dispatchers employed to execute operations.

(i) *Highway-rail grade crossing systems.* Each applicant shall identify a program, including its development and implementation, covering the following:

(1) Identification of the highway-rail grade crossings at which there will be an increase in rail traffic resulting from the transaction;

(2) An applicant's existing grade-crossing programs as they apply to grade crossings identified in paragraph (i)(1) of this section;

(3) Integration of the grade crossing programs of the railroads subject to the transaction to the extent the programs may be different;

(4) Emergency response actions;

(5) Avoidance of blocked or obstructed highway-rail crossing systems by trains, locomotives, railroad cars, or other pieces of rolling equipment; and

(6) Signs employed for changes in rail traffic patterns.

(j) *Personnel staffing.* Each applicant shall identify the number of employees by job category, currently and proposed, to perform the following types of functions when there is a projected change of operations that will impact workforce duties or responsibilities for employees of that job category:

(1) Train and engine service;

(2) Yard and terminal service;

(3) Dispatching operations;

(4) Roadway maintenance;

(5) Freight car and locomotive maintenance;

(6) Maintenance of signal and train control systems, devices, and appliances;

(7) Hazardous materials operations; and

(8) Managers responsible for oversight of safety programs.

(k) *Capital investment.* Each applicant shall identify the capital investment program, clearly displaying planned investments in track and structures, signals and train control, and locomotives and equipment. The program shall describe any differences from the program currently in place on each of the railroads involved in the transaction.

(l) *Information systems compatibility.* Each applicant shall identify measures providing for a seamless interchange of information relating to the following subject matters:

(1) Train consists;

(2) Movements and movement history of locomotives and railroad freight cars;

(3) Dispatching operations;

(4) Emergency termination of operations; and

(5) Transportation of hazardous materials.

[67 FR 11604, Mar. 15, 2002, as amended at 67 FR 68045, Nov. 8, 2002]

§ 244.15 Subjects to be addressed in a Safety Integration Plan not involving an amalgamation of operations.

If an applicant does not propose an amalgamation of operations conducted

on properties subject to the transaction, the applicant shall not be required to file a Safety Integration Plan unless directed to do so by FRA.

§ 244.17 Procedures.

(a) Each applicant shall file one original of a proposed Safety Integration Plan with the Associate Administrator for Safety, FRA, 1120 Vermont Avenue, NW., Mail Stop 25, Washington, DC, 20590, no later than 60 days after the date it files its application with the Surface Transportation Board.

(b) The applicant shall submit such additional information necessary to support its proposed Safety Integration Plan as FRA may require to satisfy the requirements of this part.

(c) The applicant shall coordinate with FRA to resolve FRA's comments on the proposed Safety Integration Plan until such plan is approved.

(d) FRA will file its findings and conclusions on the proposed Safety Integration Plan with the Board's Section of Environmental Analysis at a date sufficiently in advance of the Board's issuance of its draft environmental documentation in the case to permit incorporation in the draft environmental document.

(e) Assuming FRA approves the proposed Safety Integration Plan and the Surface Transportation Board approves the transaction and adopts the Plan, each applicant involved in the transaction shall coordinate with FRA in implementing the approved Safety Integration Plan.

(f) During implementation of an approved Safety Integration Plan, FRA expects that an applicant may change and refine its Safety Integration Plan in response to unforeseen developments. An applicant shall communicate with FRA about such developments and submit amendments to its Safety Integration Plan to FRA for approval.

(g) During implementation of an approved Safety Integration Plan, FRA will inform the Surface Transportation Board about implementation of the plan at times and in a manner designed to aid the Board's exercise of its continuing jurisdiction over the approved transaction in accordance with an agreement that FRA and the Board will enter into and execute. Pursuant to such agreement, FRA will consult with the Board at all appropriate stages of implementation, and will advise the Board on the status of the implementation process:

(1) For a period of no more than five years after the Board approves the transaction,

(2) For an oversight period for the transaction established by the Board, or

(3) Until FRA advises the Board in writing that the integration of operations subject to the transaction is complete, whichever is shorter.

(h) *Request for Confidential Treatment*. Each applicant requesting that advanced drafts of the proposed Safety Integration Plan and information in support of the proposed and approved plan that are filed with FRA receive confidential treatment shall comply with the procedures enumerated at 49 CFR 209.11.

§ 244.19 Disposition.

(a) *Standard of review*. FRA reviews an applicant's Safety Integration Plan, and any amendments thereto, to determine whether it provides a reasonable assurance of safety at every step of the transaction. In making this determination, FRA will consider whether the plan:

(1) Is thorough, complete, and clear; and

(2) Describes in adequate detail a logical and workable transition from conditions existing before the transaction to conditions intended to exist after consummation of the transaction.

(b) *Approval of the Safety Integration Plan and Amendments Thereto*. FRA approves a Safety Integration Plan, and any amendments thereto, that meets the standard set forth in paragraph (a) of this section. The approval will be conditioned on an applicant's execution of all of the elements contained in the plan, including any amendments to the plan approved by FRA.

(c) *Amendment*.—(1) *By the applicant*. The applicant may amend its Safety Integration Plan, from time to time, provided it explains the need for the proposed amendment in writing to FRA. Any amendment shall take effect

no earlier than 30 days after its submission to FRA, unless it is either approved or disapproved by FRA within that period. Any disapproval of an amendment shall be in accordance with the requirements prescribed in paragraph (b) of this section.

(2) *By FRA.* FRA may request an applicant to amend its approved Safety Integration Plan from time to time should circumstances warrant.

[67 FR 11604, Mar. 15, 2002, as amended at 67 FR 68045, Nov. 8, 2002]

§ 244.21 Compliance and Enforcement.

(a) After the Surface Transportation Board has approved a transaction subject to this part, a railroad implementing a transaction subject to this part shall operate in accordance with the Safety Implementation Plan approved by FRA until the properties involved in the transaction are completely integrated into the form contemplated in the Surface Transportation Board's approval of the transaction.

(b) FRA may exercise any or all of its enforcement remedies authorized by the Federal railroad safety laws if a railroad fails to comply with paragraph (a) of this section or to execute any measure contained in a Safety Implementation Plan approved by FRA.

APPENDIX A TO PART 244—SCHEDULE OF CIVIL PENALTIES [RESERVED]

PART 245—RAILROAD USER FEES

Subpart A—General

Sec.
245.1 Purpose and scope.
245.3 Application.
245.5 Definitions.
245.7 Penalties.

Subpart B—Reporting and Recordkeeping

245.101 Reporting requirements.
245.103 Recordkeeping.
245.105 Retention of records.

Subpart C—User Fee Calculation

245.201 User fee calculation.

Subpart D—Collection Procedures and Duty To Pay

245.301 Collection procedures.
245.303 Duty to pay.

AUTHORITY: 45 U.S.C. 431, 437, 438, 446; 49 CFR 1.49(m).

SOURCE: 57 FR 30602, July 9, 1992, unless otherwise noted.

Subpart A—General

§ 245.1 Purpose and scope.

(a) The purpose of this part is to implement section 216 of the Federal Railroad Safety Act of 1970 (45 U.S.C. 446) (the ''Safety Act'') which requires the Secretary of Transportation to establish a schedule of fees to be assessed equitably to railroads to cover the costs incurred by the Federal Railroad Administration (''FRA'') in administering the Safety Act (not including activities described in section 202(a)(2) thereof).

(b) Beginning in the fiscal year ending September 30, 1991, each railroad subject to this part shall pay an annual user fee to the FRA. For fiscal years 1992 through 1995, the user shall be calculated by FRA in accordance with § 245.101. The Secretary's authority to collect user fees shall expire on September 30, 1995, as provided for in section 216(f) of the Safety Act.

§ 245.3 Application.

This part applies to all railroads except those railroads whose entire operations are confined within an industrial installation.

§ 245.5 Definitions.

As used in this part—

(a) *Employee hours* means the number of hours worked by all employees of the railroad during the previous calendar year.

(b) *FRA* means the Federal Railroad Administration.

(c) *Industrial track* means a switching track serving industries, such as mines, mills smelters, and factories.

(d) *Light density railroad* means railroads with 1200 or less train-miles per road mile.

(e) *Main track* means a track, other than an auxiliary track, extending through yards or between stations, upon which trains are operated by timetable or train order or both, or the use of which is governed by a signal system.

(f) *Passenger service* means both intercity rail passenger service and commuter rail passenger service.

(g) *Railroad* means all forms of nonhighway ground transportation that run on rails or electro-magnetic guideways, including (1) commuter or other short-haul rail passenger service in a metropolitan or suburban area, as well as any commuter rail service which was operated by the Consolidated Rail Corporation as of January 1, 1979, and (2) high speed ground transportation systems that connect metropolitan areas, without regard to whether they use new technologies not associated with traditional railroads. Such term does not include rapid transit operations within an urban area that are not connected to the general railroad system of transportation (*See*, 45 U.S.C. 431(e)).

(h) *Responsible entity* means the railroad subject to this part as of December 31 of the applicable fiscal year (October 1 to September 30), i.e December 31, 1991, for fiscal year 1992, December 31, 1992, for fiscal year 1993, etc.

(i) *Road miles* means the length in miles of the single or first main track, measured by the distance between terminals or stations, or both. Road miles does not include industrial and yard tracks, sidings, and all other tracks not regularly used by road trains operated in such specific service, and lines operated under a trackage rights agreement.

(j) *Safety Act* means the Federal Railroad Safety Act of 1970 (45 U.S.C. 421 *et seq.*)

(k) *Sliding Scale* means the adjustment made to the mile of road of light density railroads. The sliding scale is as follows:

Train miles per road mile	Scaling factor
Up to 500	.0
501 to 750	.25
751 to 1000	.50
1001 to 1200	.75
1201 and above	1.00

The scaling factor is multiplied by the preliminary rate per road mile for each railroad for the year.

(l) *Trackage rights agreement* means an agreement through which a railroad obtains access and provides service over tracks owned by another railroad where the owning railroad retains the responsibility for operating and maintaining the tracks.

(m) *Train* means a unit of equipment, or a combination of units of equipment (including light locomotives) in condition for movement over tracks by self-contained motor equipment.

(n) *Train mile* means the movement of a train a distance of one mile measured by the distance between terminals and/or stations and includes yard switching miles, train switching miles, and work train miles. Yard switching miles may be computed on any reasonable, supportable, and verifiable basis. In the event actual mileage is not computable by other means, yard switching miles may be computed at the rate of 6 mph for the time actually engaged in yard switching service.

(o) *Yard track* means a system of tracks within defined limits used for the making up or breaking up of trains, for the storing of cars, and for other related purposes, over which movements not authorized by timetable, or by train order may be made subject to prescribed signals, rules or other special instructions. Sidings used exclusively as passing track and main line track within yard limits are not included in the term yard track.

§ 245.7 Penalties.

Any person (including a railroad and any manager, supervisor, official, or other employee or agent of a railroad) who violates any requirement of this part or causes the violation of any such requirement is subject to a civil penalty of at least $250 and not more than $10,000 per violation. Civil penalties may be assessed against individuals only for willful violations. Each day a violation continues shall constitute a separate offense. A person may also be subject to the criminal penalties provided for in 45 U.S.C. 438(e) for knowingly and willfully falsifying records or reports required by this part.

Subpart B—Reporting and Recordkeeping

§ 245.101 Reporting requirements.

(a) Each railroad subject to this part shall submit to FRA, not later than March 1st of each year (August 1st, for

the fiscal year ending September 30, 1992) a report identifying the railroad's total train miles for the prior calendar year, the total road miles owned, operated under lease, or controlled (but not including trackage rights) by the railroad as of December 31 of the previous calendar year, and the railroad's total number of employee hours for the prior calendar year. An entity shall be considered a railroad subject to this part if it conforms to the definitions found in § 245.5(g) and (h) above. Each railroad shall report all of the data for the entire relevant calendar year whether or not its present operations generated all of the reportable data. This report shall be made on FRA Form 6180.91—Annual Report of Railroads Subject to User Fees and shall be filed by the Responsible Entity (see § 245.5(h)). The report shall include an explanation for an entry of zero for train miles, road miles, or employee hours. Each railroad shall also identify all subsidiary railroads for which it is reporting and provide a breakdown of train miles, road miles, and employee hours for each subsidiary. Finally, each railroad shall enter its corporate billing address for the user fees, and the name, title, telephone number, date, and a signature of the person submitting the form to FRA.

(b) FRA anticipates mailing blank copies of FRA Form 6180.91—Annual Report of Railroads Subject to User Fees to each railroad during the month of January (the month of July for the fiscal year ending September 30, 1992) for the railroad's use in preparing the report. This action by FRA is for the convenience of the railroads only and in no way affects the obligation of railroads subject to this part to obtain and submit FRA Form 6180.91 to FRA in a timely fashion in the event a blank form is not received from FRA. Blank copies of FRA Form 6180.91 may be obtained from the Office of Safety, FRA, 400 Seventh Street, SW., Washington, DC 20590.

(c) Train miles, as defined in § 245.5(n), shall be calculated by the railroad in accordance with the following considerations:

(1) Each railroad subject to this part is to report the train miles for the freight and passenger service it operates without regard to track or facility ownership.

(2) Train miles are to be reported by both freight and passenger railroads and shall include miles run between terminals or stations, or both, miles run by trains consisting of empty freight cars or without cars, locomotive train miles run, miles run by trains consisting of deadhead passenger equipment, motor train miles run, yard-switching miles run, work train miles, and train switching miles.

(d) Road miles, as defined in § 245.5(i), shall be calculated by the railroad in accordance with the following considerations:

(1) Road miles to be reported shall include all track owned, operated under lease, or controlled by the railroad but shall not include track used under trackage rights agreements. (Note: road miles consisting of leased track are to be reported by the lessee railroad). Road miles consisting of jointly-owned track or track jointly operated under lease shall be reported by the railroad controlling operations over the track. Road miles for a given section of railroad should be reported by only one railroad.

(2) Road miles to be reported shall not include industrial track, yard tracks, sidings, and other tracks not regularly used by road trains operated in such specific service. The determination that a particular track segment qualifies as industrial track or yard track must be made on a reasonable and supportable basis. Road miles do not include track which was out of service for the entire calendar year that is the subject of the user fee report.

(e) Employee hours, as defined in § 245.5(a), shall be calculated by the railroad in accordance with the following considerations: Employees hours to be reported include the number of hours worked by all railroad employees, regardless of occupation, during the previous calendar year. Include all employees in the occupational categories shown in appendix D of the FRA Guide for Preparing Accident/Incident Reports. Employee hours do not include time paid but not actually worked, such as holidays, vacations, etc. Employee hours do not include

hours worked by volunteers. Employee hours do not include hours worked by individuals not employed directly by the reporting railroad (i.e. contractor employees).

(f) In computing both train miles and road miles, fractions representing less than one-half mile shall be disregarded and other fractions considered as one mile.

(g) Each railroad subject to this part has a continuing obligation to assure that the information provided to FRA on Form 6180.91—Annual Report of Railroads Subject to User Fees is accurate. Should a railroad learn at a later date that the information provided was not correct, it shall submit a revised Form 6180.91 along with a letter explaining in detail the discrepancy.

(h) Each railroad subject to this part has an obligation to assure that the information provided to FRA under this part is consistent with information provided to FRA under other reporting requirements, in particular reports submitted under 49 CFR part 225—Railroad Accidents/Incidents: Reports Classification, and Investigations. The railroad shall fully explain and resolve any discrepancies.

(i) The FRA has prepared a questionnaire entitled ''Written Questionnaire on Whether Your Company Is a 'Railroad' Subject to FRA User Fee Regulations'' (FRA Form 6180.90) in order to assist in determining whether certain entities meet the definition of ''railroad'' included in § 245.5 or constitute railroads whose entire operations are confined within an industrial installation (''plant railroads'') excluded from this part under § 245.3. Copies of FRA Form 6180.90 are available from the Office of Safety, FRA, 400 Seventh Street, SW., Washington, DC 20590.

§ 245.103 Recordkeeping.

Each railroad subject to this part shall maintain adequate records supporting its calculation of the railroad's total train miles for the prior calendar year, total road miles as of December 31 of the previous calendar year, and the total employee hours for the previous calendar year. Such records shall be sufficient to enable the FRA to verify the information provided by the railroad on FRA Form 6180.91—Annual Report of Railroads Subject to User Fees. Such records shall also be available for inspection and copying by the Administrator or the Administrator's designee during normal business hours.

§ 245.105 Retention of records.

Each railroad subject to this part shall retain records required by § 245.103 for at least three years after the end of the calendar year to which they relate.

Subpart C—User Fee Calculation

§ 245.201 User fee calculation.

(a) The fee to be paid by each railroad shall be determined as follows:

(1) After March 15th of each year (August 1st for the fiscal year ending September 30, 1992), FRA will tabulate the total train miles, total employee hours, and total road miles for railroads subject to this part for the preceding calendar year. FRA's calculations will be based on the information supplied by railroads under § 245.101 hereof, and other reports and submissions which railroads are required to make to FRA under applicable regulations (i.e. 49 CFR parts 225 and 228). At the same time, FRA will calculate the total cost of administering the Safety Act for the current fiscal year (other than activities described in section 202(a)(2) thereof) which will represent the total amount of user fees to be collected.

(2) Using tabulations of total train miles, total employee hours, total road miles, and the total cost of administering the Safety Act, FRA will calculate a railroad's user fee assessment as follows:

(i) The assessment rate per train mile will be calculated by multiplying the total costs of administering the Safety Act by 0.55 and then dividing this amount (i.e., fifty-five percent of the total amount to be collected) by the total number of train miles reported to the FRA for the previous calendar year. The result will be the railroad user fee assessment rate per train mile for the current fiscal year.

(ii) The assessment rate per employee hour will be calculated by multiplying the total costs of administering the Safety Act by 0.1 and then dividing this amount (i.e., 10 percent of

the total amount to be collected) by the total number of employee hours reported to the FRA for the previous calendar year. The result will be the railroad user fee rate per employee hour for the fiscal year.

(iii) The assessment rate per road mile will be calculated in three steps. First, FRA will determine a preliminary assessment rate per road mile by multiplying the total costs of administering the Safety Act by 0.35 and dividing this amount (i.e., thirty-five percent of the total amount to be collected) by the total road miles reported to FRA for the previous calendar year. Second, FRA will adjust this preliminary rate per road mile for each light density railroad by multiplying the preliminary rate by the appropriate scaling factor identified in § 245.5(h). The result will be a reduced assessment rate per road mile for light density railroads. Third, FRA will adjust the preliminary assessment rate per road mile for all railroads except light density railroads by adding to their preliminary rate an incremental amount reflecting the reallocation of the relief provided to light density railroads under step 2 using the sliding scale. The incremental amount is calculated by subtracting (A) the total amount to be collected from light density railroads after application of the sliding scale from (B) the total amount that would have been collected from light density railroads using the preliminary assessment rate and developed under step 1 and (C) dividing the resulting amount by the total road miles reported to FRA by all railroads except light density railroads. The incremental amount is then added to the preliminary assessment rate for all railroads except light density railroads to derive the assessment rate per road mile for all railroads except light density railroads. The results will be a modified assessment rate per road mile for light density railroads qualifying under step 2 and a general assessment rate applicable to all other railroads. In those cases where the computed fee is less than the defined minimum, the net increase attributable to the application of the minimum standard is not included in the reallocation process under step 3 and is instead added to total collections.

(b) The user fee to be paid by each covered railroad is the greater of $500.00 or the sum of the railroad's train miles times the assessment rate per train mile, the railroad's employee hours times the assessment rate per employee hour, and the railroad's road miles times the applicable assessment rate per road mile.

Subpart D—Collection Procedures and Duty To Pay

§ 245.301 Collection procedures.

(a) After March 15th of each year (August 15th for the fiscal year ending September 30, 1992), FRA will publish in the FEDERAL REGISTER a notice containing FRA's preliminary estimates of the total user fee to be collected, the assessment rate per train mile, the assessment rate per employee hour, and the assessment rate per road mile (as adjusted by the sliding scale). The information published by FRA will be sufficient to enable each railroad to calculate its estimated user fee bill for the fiscal year on the basis of the train mile, employee hour, and road mile information provided by the railroad to FRA.

(b) After June 1st of each year, (August 15th for the fiscal year ending September 30, 1992), FRA will provide to each covered railroad a notice (the ''Assessment Notice'') containing FRA's final calculations of the total user fee to be collected, the assessment rate per train mile, the assessment rate per employee hour, the assessment rate per road mile (as adjusted by the sliding scale), the train miles, employee hours, and road miles for the railroad for the prior calendar year, the user fee to be paid by the railroad, and a statement and payment record form. FRA will mail the Assessment Notice sufficiently in advance of the end of the fiscal year in order to allow all collections to be completed prior to the end of the fiscal year. FRA will mail the Assessment Notice to the billing address designated by the railroad on FRA Form 6180.91—Annual Report of Railroads Subject to User Fees.

§ 245.303 Duty to pay.

(a) Beginning in the fiscal year ending September 30, 1991, each railroad subject to this part shall pay an annual railroad user fee to the FRA. Payment in full shall be received by FRA no later than thirty days after the Assessment Notice is mailed. Payment is made only when received by FRA. Payments in excess of ten thousand dollars ($10,000.00) shall be made by wire transfer through the Federal Reserve communications, commonly known as Fedwire, to the account of the U.S. Treasury in accordance with the instructions provided in the Assessment Notice. Payments of ten thousand dollars or less shall be by check or money order payable to the Federal Railroad Administration. The payment shall be identified as the railroad's user fee by noting it with the User Fee Bill Number as assigned by FRA and by returning the payment record received with the Assessment Notice. Payment shall be sent to the address stated in the assessment notice. Any railroad making an aggregate payment for one r more subsidiaries or affiliates should return the payment records for each and list all applicable Bill Numbers with the payment.

(b) The responsibility for paying the user fee rests with the responsible entity (see § 245.5(h)). Parties involved in purchase and sale transactions of railroad(s) or portions of a railroad shall be responsible for allocating the user fee amongst the interested entities in an appropriate fashion. FRA will not prorate user fee bills.

(c) No user fee will be collected from railroads that properly report zero train miles and zero road miles on FRA Form 6180.91—Annual Report of Railroads Subject to User Fees.

(d) Payments not received by the due date will be subject to allowable interest charges, penalties, and administrative charges (31 U.S.C. 3717). Follow-up demands for payment and other actions intended to assure timely collection, including referral to local collection agencies or court action, will be conducted in accordance with Federal Claims Collection Standards (4 CFR chapter II) and Departmental procedures (49 CFR 89).

PART 250—GUARANTEE OF CERTIFICATES OF TRUSTEES OF RAILROADS IN REORGANIZATION

Sec.
250.1 Form and content of application.
250.2 Required exhibits.
250.3 Fees.
250.4 Execution and filing of application.
250.5 General instructions.

AUTHORITY: Sec. 3(f) of the Emergency Rail Services Act of 1970, Pub. L. 91–663; sec. 1.49(m), regulations of the Office of the Secretary of Transportation, 49 CFR 1.49(m).

SOURCE: 36 FR 770, Jan. 16, 1971, unless otherwise noted.

§ 250.1 Form and content of application.

The application shall include, in the order indicated and by section numbers and letters corresponding to those used in this part, the following:

(a) *As to the Trustee:*

(1) Full and correct name and principal business address.

(2) The name and address of the reorganization court under the direction of which the Trustee is acting and the docket number of the proceeding.

(3) Name, title, and address of the person to whom correspondence regarding the application should be addressed.

(4) Brief description of the loan and its purpose or purposes, including statements of

(i) The total amount of the loan and the amount of the guarantee being sought,

(ii) The purpose or purposes for which the loan proceeds will be used,

(iii) The maturity date or dates,

(iv) The date or dates on which the Trustee desires the funds to be made available, and

(v) The rate of interest.

(5) Statement, in summary form, showing financial obligations to or claims against the United States or obligations for which the United States is guarantor, if any, by applicant or any applicant's parent as to the date of the application, including:

(i) Status of any claims under litigation; and

(ii) Any other debts or credits existing between the applicant and the United States, showing the department

or agency involved in such loans, claims and other debts;

(6)(i) Statement on behalf of the Trustee that the Trustee has endeavored to obtain a loan or loans for the purpose or purposes proposed without a guarantee by the Secretary, but has not been able to obtain a loan therefor upon reasonable terms, or if only upon terms considered unreasonable, a statement setting forth such terms and describing any facts relevant thereto.

(ii) Information as to the Trustee's efforts to obtain the needed financing without a guarantee thereof by the Secretary, and as to the results of such efforts. (See § 250.2(b)(1) as to exhibits on this subject.)

(7) Full and complete statement, together with independent supporting evidence, where feasible, concerning the effect that cessation of essential transportation services of carrier would have on the public welfare.

(8) Full and complete statement, together with supporting evidence, where possible, demonstrating that cessation of essential transportation services by applicant carrier is imminent.

(9) Full and complete statement, together with supporting evidence, if possible, that there is no other practicable means of obtaining funds to meet payroll and other expenses necessary to provide essential transportation services other than the issuance of Trustee certificates. Such statements shall include in detail a complete listing of all nontransportation assets of the carrier and corporate affiliates, or subsidiaries having a fair market value of not less than $50,000, together with the amount of encumbrances thereon, if any, and a statement or plan for the disposition or sale of such assets as a means of obtaining funds necessary for essential transportation services.

(10) Full and complete statement, together with supporting evidence, if possible, demonstrating, with particularity, that the carrier can reasonably be expected to become self sustaining within a reasonable period of time.

(11) Full and complete statement, together with supporting evidence, that the probable value of the assets of the carrier in the event of liquidation provides reasonable protection to the United States.

(b) *As to the holder or holders:*

(1) Full and correct name and principal business address.

(2) Names and addresses of principal executive officers and directors, or partners.

(3) Reference to applicable provisions of law and the charter or other governing instruments conferring authority to the lender to make the loan and to accept the proposed obligation.

(4) Brief statement of the circumstances and negotiations leading to the agreement by the lender to make the proposed loan, including the name and address of any person or persons, or employees of the carrier, representing or purporting to represent the Trustee in connection with such negotiations.

(5) Brief statement of the nature and extent of any affiliation or business relationship between the lender and any of its directors, partners, or principal executive officers, on the one hand, and, on the other, the carrier and any of its directors, partners, or principal executive officers, or any person or persons whose names are required to be furnished under paragraph (b)(4) of this section.

(6) Full and complete statement of all sums paid or to be paid and of any other consideration given or to be given by lender in connection with the proposed loan, including with respect thereto:

(i) Name and address of each person to whom the payment is made or to be made,

(ii) The amount of the cash payment, or the nature and value of other consideration,

(iii) The exact nature of the services rendered or to be rendered,

(iv) Any condition upon the obligation of the lender to make such payment, and

(v) The nature of any affiliation, association, or prior business relationship between any person named in answer to paragraph (6)(i) of this section and the lender or any of its directors, partners, or officers.

(c) *As to the impact of the financing on the environment.* (1) Summary statement of the use to which funds will be put and any anticipated impact on the

environment. After reviewing this submission, the Administrator retains the right to require the Trustee to submit a detailed assessment of the financing's impact on the environment in a general format to be supplied by the Administrator.

(2) [Reserved]

[44 FR 23851, Apr. 23, 1979]

§ 250.2 Required exhibits.

There shall be filed with and made a part of each application and copy thereof the following exhibits, except that exhibits filed with the Administrator pursuant to some other statutory provision or regulation which are in the same format as the following exhibits may be incorporated in and made part of the application filed under this part by reference. While the application is pending, when actual data become available in place of the estimated or forecasted data required in the exhibits under this part, such actual data must be reported promptly to the Administrator in the form required in the appropriate exhibit.

(a) The following exhibits are required concerning the Trustee and the carrier:

(1) As Exhibit 1, copy of duly certified order of the court, or instrument of appointment, appointing trustees of the carrier.

(2) As Exhibit 2, a certified copy of the order(s) of the reorganization court having jurisdiction of applicant authorizing (i) the filing of the application with the Administrator for a guarantee of the Trustee's certificate; (ii) filing of the application with the Interstate Commerce Commission for authority to issue a Trustee's certificate; (iii) such pledge of security for the loan and the guarantee as the applicant proposes in connection with Exhibit 3; and (iv) compliance by the Trustee with conditions to the guarantee imposed by law and the Administrator.

(3) As Exhibit 3, full and complete statement, together with supporting evidence, that the probable value of the assets of the railroad in the event of liquidation provides reasonable protection to the United States.

(4) As Exhibit 4, a map of the carrier's existing railroad.

(5) As Exhibit 5, statement showing miles of line owned; miles operated; number of units of locomotives, freight cars, and passenger cars owned and leased; principal commodities carried; and identification of the ten most important industries served.

(6) As Exhibit 6, statement as to whether any railroad affiliated with the carrier has applied for or received any Federal assistance since 1970.

(7) As Exhibit 7, statement showing total dividends, if any, declared and total dividends paid for each of the last 5 calendar years and for each month of the current year to latest available date.

(8) As Exhibit 8, a copy of applicant's most recent year-end general balance sheet certified by applicant's independent public accountants, if available, and a copy of applicant's most recent unaudited general balance sheet as of a date no less recent than the end of the third month preceding the date of the filing of the application. The unaudited balance sheet shall be presented in account form and detail as required in Schedule 200 of the Commission's annual report R–1 or R–2, as appropriate, together with the following schedules (where changes in accounts from the end of the prior year to date of the application have not been significant, copies of the appropriate schedules in the prior year's R–1 or R–2 with marginal notations listing the changes may be substituted):

(i) Particulars of Account 704, Loans and Notes Receivable, in form and detail as required in Schedule 201 of annual report R–1 for the Class I railroads, and in similar form for the Class II railroads except that for Class II railroads, loans and notes receivable that are each less than $25,000 may be combined into a single amount;

(ii) Particulars of investment in affiliated companies and other investment in form and detail required in Schedules 205 and 206 of annual report R–1, or Schedules 1001 and 1002 of annual report R–2, as appropriate;

(iii) Particulars of balances in Accounts 741, Other Assets, and 743, Other Deferred Changes, in form and detail required in Schedule 216 of annual report R–1 or Schedule 1703 of annual report R–2, as appropriate;

(iv) Particulars of loans and notes payable in form and detail required in Schedule 223 of annual report R–1, or Schedule 1701 of annual report R–2, as appropriate, as well as information as to bank loans, including the name of the bank, date and amount of the original loan, current balance, maturities, rate of interest, and security, if any;

(v) Particulars of long-term debt in form and detail required in Schedules 218 and 219 of annual report R–1 or Schedules 670, 695, 901, 902 and 1702 of annual report R–2, as appropriate, together with a brief statement concerning each mortgage, pledge, and other lien, indicating the property or securities encumbered, the mortgage limit per mile, if any, and particulars as to priority;

(vi) Particulars of balance in Account 784. Other Deferred Credits, in form and detail required in Schedule 225 of annual report R–1 or Schedule 1704 of annual report R–2, as appropriate; and

(vii) Particulars as to capital stock in form and detail required in Schedules 228, 229, and 230 of annual report R–1 or Schedule 690 in annual report R–2, as appropriate.

(9) As Exhibit 9, a copy of carrier applicant's report to its stockholders or report of the trustee for each of the 3 years preceding the year in which the application is filed.

(10) As Exhibit 10, applicant's most recent annual income statement certified by applicant's independent public accounts if available, and a spread sheet showing unaudited monthly and year-to-date income statement data for the calendar year in which the application is filed in account form similar to that required in column (a) of Schedule 300 of annual report R–1 or R–2 as appropriate. For those months preceding and ending upon the date of the unaudited balance sheet presented in Exhibit 8, the income statement shall be reported on an actual basis and so noted. For those months between the dates of the unaudited balance sheet and the filing of the application, the income statement data shall be reported on an estimated basis and so noted and shall be submitted in conjunction with corresponding estimated month-end balance sheets. For those months between the date of the application and the end of the year income statement data shall be presented on a forecasted basis and so noted and shall be submitted in conjunction with a forecasted balance sheet as at the year end.

(11) As Exhibit 11, spread sheets showing for each of the four years subsequent to the year in which the application is filed, both before and after giving effect to the proceeds of the assistance required in the application:

(i) Forecasted annual income statement data in account form and detail similar to that required in column (a) of Schedule 300 of annual report R–1 or R–2 as appropriate, including the subaccounts comprising line 2 (railway operating expenses), as specified by lines 64, 92, 105, 159, 166, and 180 of Schedule 320; and

(ii) Forecasted year-end balance sheets in account form and detail similar to that required in Schedule 200 of annual report R–1 or R–2, as appropriate. These spread sheets shall be accompanied by a statement setting forth the bases for such forecasts.

(12) As Exhibit 12, a spread sheet showing changes in financial position for the year in which the application is filed in account form and detail as required in Schedule 309 of annual report R–1 and R–2 as appropriate as follows:

(i) For that period ending on the date of the unaudited balance sheet in Exhibit C, based upon actual data; and

(ii) For that period from the balance sheet date to the end of the year, based upon estimated and forecasted data.

(13) As Exhibit 13, a spread sheet showing forecasted changes in financial position for each of the four calendar years subsequent to the year in which the application is filed, both before and after giving effect to any funds requested in the application and including a statement showing the bases for such estimates, in account form and detail as required in Schedule 309 of the annual Report R–1 for Class I railroads in similar form and detail for Class II railroads.

(14) As Exhibit 14, a statement showing actual cash balance at the beginning of each month and the actual cash receipts and disbursements during each month of the current year to the date of the latest balance sheet furnished as

Exhibit 8, together with a monthly forecast (both before and after giving effect to use of proceeds from the proposed loan) for the balance of the current year and the year subsequent thereto.

(15) As Exhibit 15, a general statement setting forth the facts as to estimated prospective earnings and other funds upon which applicant relies to repay the loan.

(b) The following exhibits are required as to the transaction.

(1) As Exhibit 16, copies of correspondence from all, and not less than three, lending institutions or security underwriters to which application for the financing has been made, evidencing that they have declined the financing unless guaranteed by the Secretary or specifying the terms upon which they will undertake the financing without such guarantee.

(2) As Exhibit 17, specimens, or forms where specimens are not available, of all securities to be pledged or otherwise issued in connection with the proposed loan; and in case of mortgage, a copy of the mortgage or indenture.

(3) As Exhibit 18, copies of the loan agreement entered into, or to be entered into, between the Trustee and lender, and of any agreements or instruments executed or be executed in connection with the proposed loan.

[44 FR 23852, Apr. 23, 1979]

§ 250.3 Fees.

On date of final payment of the loan guaranteed by the Secretary pursuant to application filed under this part, the applicant carrier or the trustee, if still in existence, shall pay, or cause to be paid, to the Administrator as a guarantee fee such amount as the Administrator hereafter may determine and prescribe as necessary to cover the administrative costs of carrying out the provisions of the Emergency Rail Services Act of 1970.

§ 250.4 Execution and filing of application.

The following procedure shall govern the execution and filing of the application:

(a) The original application shall bear the date of execution and be signed with ink by or on behalf of the trustee and the lender. Execution on behalf of the trustee shall be by the trustee or trustees having knowledge of the matters therein set forth. Persons signing the application on behalf of the trustee and lender, respectively, shall also sign a certificate in form as follows:

(Name of official) _____ certifies that he is the _____ (title of official) of the _____ (name of carrier or lender); that he is authorized on the part of said applicant to sign and file with the Administrator this application and exhibits attached thereto; that he has carefully examined all of the statements contained in such application and the exhibits attached thereto and made a part thereof relating to the aforesaid _____ (name of carrier or lender); that he has knowledge of the matters set forth therein and that all such statements made and matters set forth therein are true and correct to the best of his knowledge, information, and belief.

(Date)

(b) There shall be made a part of the original application the following certificate by the Chief Accounting Officer of the carrier:

(Name of officer) _____, certifies that he is _____ (title of officer) of _____ (name of carrier applicant); that he has supervision over the books of account and other financial records of the carrier and has control over the manner in which they are kept; that such accounts are maintained in good faith in accordance with the effective accounting and other orders of the Interstate Commerce Commission; that he has examined the financial statements and supporting schedules included in this application and to the best of his knowledge and belief said statements accurately reflect the accounts as stated in the books of account; and that, other than the matters set forth in the exceptions attached to such statements, said financial statements and supporting schedules represent a true and complete statement of the financial position of the carrier applicant and that there are no undisclosed assets, liabilities, commitments to purchase property or securities, other commitments, litigation in the courts, contingent rental agreements, or other contingent transactions which might materially affect the financial position of the carrier applicant.

(Date)

(c) The original application and supporting papers, and six copies thereof for the use of the Administrator shall

be filed with the Administrator, Federal Railroad Administration, Department of Transportation, Washington, DC. Simultaneously, one copy of the application and supporting papers shall be filed with the Secretary of the Interstate Commerce Commission, Washington, DC. Each copy shall bear the dates and signatures that appear in the original and shall be complete in itself, but the signatures in the copies may be stamped or typed. If unusual difficulties arise in the furnishing of any of the exhibits required in § 250.2, the carrier applicant or the lender, upon appropriate showing and with the consent of the Administrator, may file a lesser number.

(d) In the event the furnishing of exhibits in the detail required by § 250.2 is shown by the applicant or applicants to be unduly burdensome in relation to the nature and amount of the loan, the Administrator may modify the requirements of said section. In addition, the Administrator may waive or modify any requirement of this part upon good cause shown, or make any additional requirements he deems necessary.

§ 250.5 General instructions.

(a) If the application is approved by the Administrator and the Secretary of Transportation and the latter agrees to make the guarantee, the following documents will be required for deposit with the Administrator before the transaction is closed:

(1) Final opinion by counsel for the Trustee to the effect that he is familiar with the corporate powers of the carrier applicant and the orders of the reorganization court; that the Trustees of the carrier applicant are authorized to execute and deliver the certificate or other obligations evidencing the same, and to pledge and hypothecate any securities pledged as collateral; that the certificate or other obligations so executed and so delivered constitute the valid and binding obligations of the Trustees of the carrier that the certificate or other obligations of the Trustee will be treated as an expense of administration and receive the highest lien on the railroads property and priority in payment under the Bankruptcy Act, and that the lender and the Secretary will obtain a lien on any security involved of the rank and priority represented by the Trustee. Such opinion shall also cover the priority and lien of each item of the collateral offered.

(2) Certified copies of the reorganization court orders and decrees authorizing the Trustee to execute and deliver the certificates or other obligations and to give the security under and according to the terms of the loan and guarantee as prescribed by the Administrator. Such order or orders of the reorganization court shall specify that trustee certificates, guaranteed by the Secretary as to payment of principal and interest, shall be treated as an expense of administration and receive the highest lien on the railroad's property and priority in payment under the Bankruptcy Act.

(3) Unexecuted copies of the foregoing documents will be delivered to the Administrator 3 business days prior to closing.

(b) The guarantee by the Secretary of a loan pursuant to an application filed as provided in this part should not be construed as relieving a carrier from complying with applicable provisions of section 20a of the Interstate Commerce Act (49 U.S.C. 20a) in relation to the issuance of Trustee certificates.

PART 256—FINANCIAL ASSISTANCE FOR RAILROAD PASSENGER TERMINALS

REGULATIONS GOVERNING APPLICATIONS FOR AND DISBURSEMENT OF FINANCIAL ASSISTANCE

Sec.
256.1 Purpose.
256.3 Definitions.
256.5 Eligibility.
256.7 Financial assistance.
256.9 [Reserved]
256.11 Applications.
256.13 Review and approval of applications.
256.15 Disbursement of financial assistance.
APPENDIX A TO PART 256—CERTIFICATE

AUTHORITY: Sec. 4(i) of the Department of Transportation Act, 49 U.S.C. 1653(i), as amended by (1) sec. 15 of the Amtrak Improvement Act of 1974, Pub. L. 93–496, 88 Stat. 1528; (2) sec. 13 of the Amtrak Improvement Act of 1975, Pub. L. 94–25, 89 Stat. 93; (3) sec. 706 of the Railroad Revitalization and Regulatory Reform Act of 1976, Pub. L. 94–210, 90 Stat. 125; and (4) sec. 219(a) of the Rail Transportation Improvement Act, Pub. L.

94–555, 90 Stat. 2629; and regulations of the Office of the Secretary of Transportation, 49 CFR 1.49(r).

REGULATIONS GOVERNING APPLICATIONS FOR AND DISBURSEMENT OF FINANCIAL ASSISTANCE

§ 256.1 Purpose.

The purpose of this part is to establish procedures for implementing subsection 4(i) of the Department of Transportation Act as amended (49 U.S.C. 1653(i)) with respect to all financial assistance provided under that subsection.

[40 FR 29080, July 10, 1975]

§ 256.3 Definitions.

As used in this part—

(a) *Act* means the Department of Transportation Act, as amended.

(b) *Administrator* means the Federal Railroad Administrator, or his delegate.

(c) *Allowable project costs* means those project costs for which Federal financial assistance may be expended under § 256.7.

(d) *Applicant* means a governmental entity, a non-profit public-purpose organization, or any responsible person having the legal, financial, and technical capacity to implement an intermodal passenger terminal project under this part. The applicant must have legal authority to receive and expend Federal funds.

(e) *Chairman* means the Chairman of the National Endowment for the Arts.

(f) *Civic and cultural activities* includes, but is not limited to, museums, libraries, musical and dramatic presentations, art exhibitions, adult education programs, public meetings of community groups, convention visitors and others, and other public activities supported in whole or in part under Federal law.

(g) *Council* means the Advisory Council on Historic Preservation.

(h) *Demonstration funds* means funds authorized for the purpose set forth in paragraph (1)(A) of subsection 4(i) of the Act.

(i) *Intermodal passenger terminal* means an existing railroad passenger terminal which has been or may be modified as necessary to accommodate several modes of transportation, including intercity rail service and some or all of the following: Intercity bus, commuter rail, intra-city rail transit and bus transportation, airport limousine service and airline ticket offices, rent-a-car facilities, taxis, private parking, and other transportation services.

(j) *National Register* means the National Register of Historic Places maintained by the Secretary of the Interior.

(k) *Planning funds* means funds authorized for the purpose set forth in paragraph (1)(D) of subsection 4(i) of the Act.

(l) *Preservation funds* means funds authorized for the purpose set forth in paragraph (1)(B) of subsection 4(i) of the Act.

(m) *Project* means a locally sponsored, coordinated, and administered program, or any part thereof, to plan, finance, construct, maintain, or improve an intermodal passenger terminal, which may incorporate civic or cultural activities where feasible in an architecturally or historically distinctive railroad passenger terminal.

(n) *4R Act* means the Railroad Revitalization and Regulatory Reform Act of 1976, as amended, Public Law 94–210, 90 Stat. 125, 49 U.S.C. 1653.

(o) *Sufficient commitments* means commitments of a binding nature adequate to ensure the successful operation of a project. Such commitments may be conditional, requiring, for example, the participation of other entities in the project, or action by a date certain.

[40 FR 29080, July 10, 1975, as amended at 43 FR 21887, May 22, 1978; 44 FR 21647, Apr. 11, 1979]

§ 256.5 Eligibility.

(a) *General*. A project is eligible for financial assistance under subsection 4(i) of the Act if:

(1) The applicant provides satisfactory assurance that such fiscal control and fund accounting procedures will be adopted as may be necessary to assure proper disbursement of and accounting for Federal financial assistance granted to the applicant under the Act;

(2) The applicant complies with the regulations of the Administrator prescribed in this part, and with such

other terms and conditions as may be included in the grant of assistance; and

(3) The Council is given a reasonable opportunity to review and comment upon the project as it affects property listed or eligible for listing on the National Register.

(b) *Demonstration funds.* A project is eligible for financial assistance in accordance with subsection 4(i) of the Act if the Administrator determines that:

(1) The railroad passenger terminal can be converted to an intermodal passenger terminal;

(2) There exist sufficient commitments by Amtrak or other rail passenger carriers, and by intercity bus carriers, the local public transportation authority, or other public or private transportation operators, to provide co-ordinated service for convenient intermodal interchange to meet the goals enumerated in paragraph (b) of § 256.13;

(3) The railroad passenger terminal is listed on the National Register;

(4) The architectural integrity of the railroad passenger terminal will be preserved, and this determination is concurred in by the consultants recommended by the Chairman and Council and retained by the Administrator for this purpose;

(5) To the extent practicable, the use of station facilities for transportation purposes may be combined with use for other civic and cultural activities, especially when such use is recommended by the Council or the Chairman, or the consultants retained by the Administrator upon their recommendation;

(6) The applicant has provided the information and documentation required under § 256.11(c).

(7) The railroad passenger terminal and the conversion project meet such other criteria as the Administrator may develop and promulgate in consultation with the Chairman and the Council.

(c) *Preservation funds.* A project is eligible for financial assistance in accordance with subsection 4(i) of the Act if the Administrator determines that:

(1) The applicant is empowered by applicable law, and is qualified, prepared, and committed, on an interim basis pending the formulation of plans for reuse, to maintain and prevent the demolition, dismantling, or further deterioration of, a railroad passenger terminal;

(2) The railroad passenger terminal is threatened with demolition, dismantling, or further deterioration;

(3) There is a reasonable likelihood that the railroad passenger terminal will be converted to or conditioned for reuse as an intermodal passenger terminal. The primary use of the terminal shall be for intermodal purposes, but facilities for the provision of civic and cultural activities may be incorporated to the extent feasible. Such dual use of the terminal is particularly encouraged when it is recommended by the Council or the Chairman.

(4) Planning activity aimed at conversion or reuse has commenced and is proceeding in a competent manner;

(5) The expenditure of funds on such project would be in the manner most likely to maximize the preservation of railroad passenger terminals which are:

(i) Reasonably capable of conversion to intermodal passenger terminals;

(ii) Listed in the National Register; or

(iii) Recommended on the basis of architectural integrity and quality by the Chairman or the Council; and

(6) The applicant has provided the information and documentation required by § 256.11(d).

(d) *Planning funds.* A project is eligible for financial assistance in accordance with subsection 4(i)(5) of the Act if the Administrator determines that:

(1) The applicant is prepared to develop practicable plans meeting the zoning, land use, and other requirements of the applicable State and local jurisdictions in which the rail passenger terminal is located;

(2) The applicant incorporates into its plans for the conversion of an historic terminal into an intermodal passenger terminal, features which appear reasonably likely to attract private investors willing to finance the planned conversion and/or its subsequent maintenance and operation. The primary use of the terminal shall be for intermodal purposes, but facilities for the provision of civic or cultural activities may be incorporated to the extent feasible.

(3) The applicant will be able to complete the designs and plans for such conversion within two years following the approval of the application for Federal financial assistance;

(4) The expenditure of funds on such project would be in the manner most likely to maximize the preservation of railroad passenger terminals which are listed in the National Register or recommended on the basis of architectural integrity and quality by the Chairman or the Council; and

(5) The applicant has provided the information and documentation required under § 256.11(e).

[40 FR 29080, July 10, 1975, as amended at 43 FR 21887, May 22, 1978; 44 FR 21647, Apr. 11, 1979]

§ 256.7 Financial assistance.

(a) *Demonstration funds.* Federal financial assistance for the conversion of a railroad passenger terminal into an intermodal passenger terminal, under subsection 4(i)(2) of the Act, may be expended for the following project costs incurred after the date of final project approval:

(1) Acquisition or long-term lease of real property or other property interests, including air rights, subterranean rights, or easements, where necessary for project implementation;

(2) Final architectural and engineering construction documentation, including all necessary plans, specifications, detailed cost estimates, and implementation schedules; and

(3) Construction, which may include, but is not limited to:

(i) Complete rehabilitation and refurbishment of the interior and exterior of the structure;

(ii) Provision of necessary public service facilities;

(iii) Structural modifications and minor additions necessary to permit the development of (A) improved rail passenger facilities, (B) intercity bus terminal and docking facilities, (C) adequate facilities for local mass transit, and (D) parking and access for automobiles and bicycles; and

(iv) Provisions for accommodating major tenants and concessionaires such as airline ticket offices, rent-a-car offices, and other transportation service facilities.

(b) *Preservation funds.* Federal financial assistance under subsection 4(i)(3) of the Act, for the preservation of a railroad passenger terminal which has a reasonable likelihood of being converted or otherwise maintained, may be expended for costs incurred after the date of project approval which are necessary to maintain (and prevent the demolition, dismantling, or further deterioration of) a railroad passenger terminal pending the completion of project planning, for a period not to exceed five years.

(c) *Planning funds.* Federal financial assistance granted under subsection 4(i)(5) of the Act for the development of plans for the conversion of a railroad passenger terminal into an intermodal passenger terminal, which may incorporate civic and cultural activities where feasible, may be expended for the following project costs if incurred within two years after project approval:

(1) Cost of a study or studies to:

(i) Assess the need for and the feasibility of converting an existing railroad passenger terminal into an intermodal passenger terminal which may incorporate civic and cultural activities where feasible;

(ii) Develop a fiscal plan and agreements for the plan's implementation; and

(iii)(A) Relate the project to other transportation priorities in the area; and

(B) Evaluate alternate means of providing needed intermodal passenger services within the community.

(2) Costs of preparation of preliminary architectural and engineering design documents for the project, including:

(i) Plans, sections, and sketches illustrating the functional as well as preservation aspects of the recommended development;

(ii) Assessment of the condition of existing structural and utilities systems and requirements for their improvement;

(iii) Outline specifications and preliminary estimates of project costs; and

(iv) Required environmental impact reviews and analyses.

(d) *Federal share.* The Federal share of any project under this part shall not exceed 80 percent of the total allowable project costs. The non-Federal share may not be augmented by any Federal funds, directly or indirectly, unless the funds are provided through a Federal program which specifically authorizes the augmentation of a non-Federal share of a federally-assisted program with such funds.

[40 FR 29080, July 10, 1975, as amended at 43 FR 21887, May 22, 1978; 44 FR 21647, Apr. 11, 1979]

§ 256.9 [Reserved]

§ 256.11 Applications.

(a) *Incorporation by reference in application of previously submitted information or material.* Any information or material of any kind which has been submitted by an applicant need not be resubmitted if the prior submission is identified and incorporated by reference in the application. Where the prior submission is in need of any changes of any kind, the changes may be submitted provided the prior submission is identified and incorporated by reference with the changes. Any assurance, certification, or affirmation previously made by the applicant, in connection with a prior submission, must be reaffirmed by the applicant when any identification and incorporation by reference of previously submitted materials is made.

(b) *Pre-applications for demonstration funds.* In accordance with appendix M of Office of Management and Budget Circular A–102, applicants shall use the pre-application form directed for use for construction, land acquisition, and land development projects when applying for demonstration funds under this program. Applicants shall include under Part IV (Program Narrative) of the pre-application form:

(1) A statement of whether the railroad passenger terminal is listed in the National Register;

(2) A statement as to the interest and anticipated cooperation of the terminal owner and the relevant transportation companies;

(3) Where the applicant contemplates using funds it has received or will receive from other Federal programs for the planning or preservation stage of the projects, a brief description of the sources, and total anticipated amount of such funds; and

(4) A breakdown of the total allowable project costs.

(c) *Applications for demonstration funds.* Upon notification of the approval of the pre-application, applicants shall submit a final application for demonstration funds using the Federal Assistance Application for Construction Programs in accordance with appendix M of Office of Management and Budget Circular A–102. Applicants shall include under Part IV (Program Narrative) of the form:

(1) A list of all organizations which will participate in the planning, implementation, or operation of each project, along with a discussion of the role of each organization;

(2) A full discussion of the desirability and feasibility of the project and a summary of the benefits to be derived;

(3) A summary of each proposed use of the intermodal passenger terminal for a civic or cultural activity;

(4) A description and documentation of existing or potential markets for interline intermodal service making use of the project facility, and of any changes in existing services which must be provided to achieve this potential;

(5) The proposed period during which the project will be evaluated to determine whether it has achieved the goals set forth in § 256.13(b);

(6) A detailed description of the rail passenger terminal (including where applicable the description on file with the National Register), the available transportation facilities, and the proposed intermodal passenger transportation improvements;

(7) Evidence that the architectural integrity of the railroad passenger terminal will be preserved;

(8) A detailed estimate of the total allowable project costs, listing and identifying each cost to the maximum possible extent;

(9) Evidence of the applicant's ability and intent to furnish its share of the total allowable costs;

(10) Evidence that the applicant has established, in accordance with Attachment G of Office of Management and Budget Circular A–102, adequate procedures for financial control, accounting, and performance evaluation, in order to assure proper use of the Federal funds;

(11) An assurance by the applicant that it will use Federal funds provided under the Act solely for the purpose for which assistance is sought and in conformance with the limitations on the expenditures allowed under the Act and applicable regulations;

(12) A description of the proposed methods of monitoring and evaluating the demonstration;

(13) Copies of the following: Preliminary architectual and engineering design documents, plans, sections, sketches, and outline specifications;

(14) A proposed draft of an environmental impact statement, including documentation that the project includes all possible planning to minimize harm to the historic nature of the facility as required by section 4(f) of the Act (49 U.S.C. 1653(f)), to be reviewed, analyzed and used by the Administrator in preparation of a final Environmental Impact Statement under Department of Transportation Order 5610.IB (39 FR 35234, September 30, 1974);

(15) Two copies of an affirmative action program prepared in accordance with section 905 of the 4R Act (45 U.S.C. 803) and 49 CFR part 265;

(16) Assurances that the applicant will comply with the following Federal laws, policies, regulations and pertinent directives:

(i) Title VI of the Civil Rights Act of 1964 42 U.S.C. 2000d *et seq.*, and 49 CFR part 21;

(ii) Section 905 of the 4R Act (45 U.S.C. 803), and 49 CFR part 265;

(iii) Executive Order 11246, as amended (30 FR 12319, 32 FR 14303) and 41 CFR 60–4, as amended (43 FR 14888, Apr. 7, 1978) which require equal employment opportunity in federally-assisted construction programs.

(iv) Titles II and III of the Uniform Relocation Assistance and Real Property Acquisition Policies Act of 1970, 42 U.S.C. 4601 *et seq.*, and 49 CFR part 25;

(v) 42 U.S.C. 4151 *et seq.*, with regard to Federal policies ensuring that physically handicapped persons will have ready access to, and use of, public buildings;

(vi) The Rehabilitation Act of 1973, 29 U.S.C. 794, with regard to nondiscrimination under Federal grants;

(vii) The Hatch Act, 5 U.S.C. 1501 *et seq.*, which limits the political activities of employees; and

(viii) Where applicable, the State and Local Fiscal Assistance Act of 1972, 31 U.S.C. 1221 *et seq.*, and 31 CFR part 51.

(17) Evidence of all legal commitments including, but not limited to, operating agreements and right-of-way leases which have been obtained from private carriers, public transportation operating agencies, and other entities as appropriate, to assure continued operation of the transportation services during the evaluation period;

(18) Evidence (including, but not limited to, copies of leases, deeds, easements, certificates of title, and mortgage agreements) that the applicant's property interest in the railroad passenger terminal is or will be, at the commencement of the project, sufficient for the applicant to implement the project;

(19) A summary of each proposed agreement permitting the use of any portion of the imtermodal passenger terminal for commercial purposes other than the provision of transportation services (if a standard form contract is to be used, applicant may submit a copy of the standard contract, a list of parties with whom it has contracted, and a list of any terms not common to the standard contract);

(20) An opinion of the applicant's legal counsel advising that (i) counsel is familiar with (A) the applicant's corporate or other organization powers; (B) section 4(i) of the Act, as amended (49 U.S.C. 1653(i)); (C) the other Acts referred to in these regulations; and (D) any regulations issued to implement those Acts; (ii) the applicant is authorized to make the application including all certifications, assurances, and affirmations required; (iii) the applicant has the requisite authority to carry out the actions proposed in the application and to fulfill the obligations created thereby, including the obligation

to pay a share of the costs of the proposed project; (iv) the applicant has the authority to enter into all of the legal commitments referred to in paragraph (c)(16) of this section and that these commitments are legal and binding by their terms; and (v) the applicant's property interest in the railroad passenger terminal is sufficient for the applicant to implement the project;

(21) For projects located in urbanized areas, as defined by the Bureau of the Census, a statement that the application has been coordinated with the metropolitan planning organization, designated by the Governor of the State in which the project is located pursuant to 23 U.S.C. 104(f)(3);

(22) A certification by the applicant that, in accordance with Office of Management and Budget Circular A–95 (41 FR 2052, Jan. 13, 1976), section 204 of the Demonstration Cities and Metropolitan Development Act of 1966 (42 U.S.C. 3334), and section 401 of the Intergovernmental Cooperation Act of 1968 (42 U.S.C. 4231), notification of the project has been submitted to, and comments thereon have been solicited from, the appropriate State and regional agencies and clearinghouses; and

(23) Any other information that the Administrator may require.

(d) *Applications for preservation funds.* Each application for preservation assistance shall include:

(1) The complete name and principal business address of the applicant;

(2) The complete name, title, and address of the person to whom correspondence regarding the application should be addressed;

(3) A list of all organizations which will participate in the planning, implementation, or operation of each project, and a discussion of each organization's role;

(4) A full discussion of the desirability and feasibility of the project and a summary of the benefits to be derived;

(5) A detailed description of the rail passenger terminal (including where applicable the description on file with the National Register), the available transportation facilities, and the proposed intermodal passenger transportation improvements;

(6) Documentation of the threat to the existing terminal, involving demolition, dismantling, or further deterioration of the terminal and the causes thereof;

(7) Evidence that the planning for conversion or reuse of the terminal has commenced and that it is proceeding in a timely manner, including a copy of the projected planning schedule;

(8) A proposed draft of an environmental impact statement or a negative declaration, including documentation that the project includes all possible planning to minimize harm to the historic nature of the facility as required by section 4(f) of the Act, 49 U.S.C. 1653(f), to be reviewed, analyzed, and used by the Administrator in preparation of a final Environmental Impact Statement or Negative Declaration as required by Department of Transportation Order 5610.1B (39 FR 35234, Sept. 30, 1974);

(9) A detailed estimate of the total allowable project costs, listing and identifying all anticipated preservation costs to the maximum extent possible;

(10) The total amount of Federal assistance requested;

(11) Evidence of the applicant's ability and intent to furnish its share of the total allowable project costs;

(12) Where the applicant contemplates using funds which it has received or will receive from other Federal programs for the planning or demonstration stage of the project, a brief description of the sources, use and total anticipated amount of such funds;

(13) Evidence that the applicant has established in accordance with Attachment G of Office of Management and Budget Circular A–102, adequate procedures for financial control, accounting, and performance evaluation in order to assure proper use of the Federal funds;

(14) An assurance by the applicant that it will use Federal funds provided under the Act solely for the purpose for which assistance is sought and in conformance with the limitations on the expenditures allowed under the Act and applicable regulations;

(15) Evidence of substantial local public and/or private interest in organizing a project to convert the existing railroad passenger terminal to an intermodal passenger terminal, which

may include use for civic or cultural activities;

(16) An opinion of the applicant's legal counsel stating that:

(i) Counsel is familiar with (A) the applicant's corporate or other organizational powers; (B) section 4(i) of the Act, as amended (49 U.S.C. 1653(i)), (C) the other Acts referred to in these regulations; (D) and any regulation issued to implement those Acts;

(ii) The applicant is authorized to make this application including all certifications, assurances, and affirmations required;

(iii) The applicant has the requisite authority to carry out the actions proposed in its application and to fulfill the obligations created thereby, including the obligation to pay a share of the cost of the proposed project, and

(iv) The applicant is empowered, for an interim period pending the formulation of plans for the conversion of the existing railroad passenger terminal, to maintain the terminal building and prevent its demolition, dismantling, or further deterioration;

(17) For projects located in urbanized areas, as defined by the Bureau of the Census, a statement that the application has been coordinated with the metropolitan planning organization, designated by the Governor of the State in which the project is located, pursuant to 23 U.S.C. 104(f)(3);

(18) A certification by the applicant that, in accordance with Office of Management and Budget Circular A–95 (41 FR 2052, Jan. 13, 1976), section 204 of the Demonstration Cities and Metropolitan Development Act of 1966 (42 U.S.C. 3334), and section 401 of the Intergovernmental Cooperation Act of 1968 (42 U.S.C. 4231), notification of the project has been submitted to, and comments thereon have been solicited from, the appropriate State and regional agencies and clearinghouses;

(19) Two copies of an affirmative action program prepared in accordance with section 905 of the 4R Act (45 U.S.C. 803) and 49 CFR part 265;

(20) Assurances that the applicant will comply with the following Federal laws, policies, regulations and pertinent directives:

(i) Title VI of the Civil Rights Act of 1964, 42 U.S.C. 2000d *et seq.*, and 49 CFR part 21;

(ii) Section 905 of the 4R Act (45 U.S.C. 803) and 49 CFR part 265;

(iii) Executive Order 11246, as amended (30 FR 12319, 32 FR 14303) and 41 CFR 60–4, as amended (43 FR 14888, Apr. 7, 1978), which requires equal employment opportunity in federally-assisted construction programs.

(iv) Titles II and III of the Uniform Relocation Assistance and Real Property Acquisition Policies Act of 1970, 42 U.S.C. 4601 *et seq.*, and 49 CFR part 25;

(v) 42 U.S.C. 4151 *et seq.*, with regard to Federal policies ensuring that physically handicapped persons will have ready access to, and use of, public buildings;

(vi) The Rehabilitation Act of 1973, 29 U.S.C. 794, with regard to nondiscrimination under Federal grants;

(vii) The Hatch Act, 5 U.S.C. 1501 *et seq.*, which limits the political activities of employees; and

(viii) Where applicable, the State and Local Fiscal Assistance Act of 1972, 31 U.S.C. 1221 *et seq.*, and 31 CFR part 51; and

(21) Any other information that the Administrator may require.

(e) *Applications for planning funds.* Each application for planning assistance shall include:

(1) The complete name and principal business address of the applicant;

(2) The name, title, and address of the person to whom correspondence regarding the application should be addressed;

(3) A list of all organizations which will participate in the planning, implementation, or operation of each project, and a discussion of each organization's role;

(4) A preliminary statement of work, and a detailed estimate of all planning costs broken down by project task;

(5) A proposed schedule for the planning process;

(6) A full discussion of the desirability and feasibility of the project and a summary of the benefits to be derived;

(7) A detailed description of the rail passenger terminal (including, where applicable, the description on file with the National Register), the available

transportation facilities, and the proposed intermodal passenger transportation improvements;

(8) The total amount of Federal assistance requested;

(9) Evidence of the applicant's ability and intent to furnish its share of the total allowable project costs;

(10) Where the applicant contemplates using funds which it has received or will receive from other Federal programs for the preservation or demonstration stages of the project, a brief description of the sources, use, and anticipated amount of such funds;

(11) Evidence that the applicant has established, in accordance with Attachment G of Office of Management and Budget Circular A–102, adequate procedures for financial control, accounting, and performance evaluation, in order to assure proper use of the Federal funds;

(12) An assurance by the applicant that it will use Federal funds provided under the Act solely for the purpose for which assistance is sought and in conformance with the limitations on the expenditures allowed under the Act and applicable regulations;

(13) An opinion of the applicant's legal counsel stating that:

(i) Counsel is familiar with (A) the applicant's corporate or other organization powers; (B) section 4(i) of the Act, as amended, 49 U.S.C. 1653(i); (C) the other Acts referred to in these regulations; and (D) any regulations issued to implement those Acts;

(ii) The applicant is authorized to make this application including all certifications, assurances, and affirmations required; and

(iii) The applicant has the requisite authority to carry out the actions proposed in its applications and to fulfill the obligations created thereby, including the obligation to pay a share of the costs of the proposed project;

(14) A proposed schedule for the implementation of the applicant's completed designs and plans;

(15) For projects located in urbanized areas, as defined by the Bureau of the Census, a statement that the application has been coordinated with the metropolitan planning organization, designated by the Governor of the State in which the project is located, pursuant to 23 U.S.C. 104(f)(3);

(16) A certification by the applicant that, in accordance with Office of Management and Budget Circular A–95 (41 FR 2052, Jan. 13, 1976), section 204 of the Demonstration Cities and Metropolitan Development Act of 1966 (42 U.S.C. 3334), and section 401 of the Intergovernmental Cooperation Act of 1968 (42 U.S.C. 4231), notification of the project has been submitted to, and comments thereon have been solicited from, the appropriate State and regional agencies and clearinghouses;

(17) Two copies of an affirmative action program prepared in accordance with section 905 of the 4R Act (45 U.S.C. 803) and 49 CFR part 265;

(18) Assurances that the applicant will comply with the following Federal laws, policies, regulations, and pertinent directives:

(i) Title VI of the Civil Rights Act of 1964, 42 U.S.C. 2000d et seq. and 49 CFR part 21;

(ii) Section 905 of the 4R Act (45 U.S.C. 803) and 49 CFR part 265;

(iii) Title II and title III of the Uniform Relocation Assistance and Real Property Acquisition Policies Act of 1970, 42 U.S.C. 4601 *et seq.* and 49 CFR part 25;

(iv) 42 U.S.C. 4151 *et seq.*, with regard to Federal policies ensuring that physically handicapped persons will have ready access to, and use of, public buildings;

(v) The Rehabilitation Act of 1973, 29 U.S.C. 794, with regard to nondiscrimination under Federal grants;

(vi) The Hatch Act, 5 U.S.C. 1501, *et seq.*, which limits the political activities of employees; and

(vii) Where applicable, the State and Local Fiscal Assistance Act of 1972, 31 U.S.C. 1221 *et seq.*, and 31 CFR part 51;

(19) A statement that the applicant is prepared to develop practicable plans meeting the zoning, land use, and other requirements of the applicable State and local jurisdictions in which the rail passenger terminal is located.

(20) An assurance by the applicant that the designs and plans for the conversion to an intermodal passenger terminal, including any use for civic or cultural activities, will be completed

within two years following the approval of the application for Federal financial assistance;

(21) A description of how the applicant can incorporate features which appear reasonably likely to attract private investors willing to share in the implementation of the planned conversion and its subsequent maintenance and operation;

(22) An environmental assessment using an interdisciplinary approach in identifying the type, degree, effect, and probability of occurrence of potential environmental impacts due to the conversion to an intermodal passenger terminal; and

(23) Any other information that the Administrator may require.

(f) *Execution and filing of applications.* (1) The original application shall bear the date of execution and be signed by the Chief Executive Officer of the applicant or by the applicant, where the applicant is an individual. Each person required to execute an application shall execute a certificate in the form of appendix A hereto.

(2) The original application and two (2) copies shall be filed with the Federal Railroad Administrator, Department of Transportation, 400 7th Street SW., Washington, DC 20590. Each copy shall show the dates and signatures that appear in the original and shall be complete in itself.

(3) Pre-applications for demonstration funds must be submitted to the Administrator no later than August 21, 1978. Applications for planning, preservation and demonstration funds must be submitted to the Administrator no later than September 19, 1978. Applications received after these deadlines will not be considered for funding, unless all funds are not granted to applicants who have met the application deadline.

[43 FR 21887, May 22, 1978]

§ 256.13 Review and approval of applications.

(a) *Pre-applications.* Pre-applications for demonstration funds shall be reviewed by the Administrator in consultation with the Chairman and the Council.

(b) *Applications.* The Administrator shall review applications in consultation with the Chairman and the Council and select and monitor projects most likely to accomplish the following goals:

(1) Demonstrate the capabilities of intermodal terminals to provide a more effective means of passenger interchange between various modes of transportation;

(2) Demonstrate the advantages of joint use terminal facilities to carriers;

(3) Demonstrate a more comprehensive and effective network of energy efficient surface common carrier transportation services through improving coordinated interline intermodal exchange at selected intermodal passenger terminals distinguished by coordinated information systems, schedules, and through ticketing and baggage handling;

(4) Evaluate user response to such coordinated interline intermodal transportation services, and to joint carrier use of terminal facilities;

(5) Demonstrate the potential of underutilized railroad passenger terminals of historical and architectural distinction for improving intermodal passenger transportation services and for providing an appropriate focal point for civic and cultural activities;

(6) Stimulate local public and private investment, by transportation carriers and others, in improved intercity and local public transportation facilities and services;

(7) Encourage the preservation of railroad passenger terminals pending the formulation of plans for reuse; and

(8) Encourage the development of plans for the conversion of railroad passenger terminals into intermodal passenger terminals, which may incorporate civic and cultural activities where feasible.

(c) *Preferential consideration.* In reviewing applications for planning funds, the Administrator shall give preferential consideration to applicants whose completed designs and plans will be implemented and effectuated within three years after the date of completion.

(d) *Approval within 90 days.* The Administrator will approve or deny each application within 90 days of the submission dates set forth in § 256.11(f)(3) and the Administrator will promptly

notify in writing each applicant whose application has been approved.

[40 FR 29080, July 10, 1975, as amended at 43 FR 21890, May 22, 1978; 44 FR 21647, Apr. 11, 1979]

§ 256.15 Disbursement of financial assistance.

(a) *Grant agreement.* After receipt, review, and approval of an application, the Administrator will enter into a grant agreement with an applicant for the Federal share of the total allowable project costs. The terms and conditions of payment of the Federal share shall be set forth in the grant agreement.

(b) *Record retention.* Each recipient of financial assistance under this part shall keep such records as the Administrator shall prescribe, including records which fully disclose the amount and disposition by such recipient of the proceeds of such assistance, the total cost of the project or undertaking in connection with which such assistance was given or used, the amount of that portion of the cost of the project or undertaking supplied by other sources, and such other records as will facilitate an effective audit.

(c) *Audit and examination.* Until the expiration of three years after the completion of the project or undertaking referred to in paragraph (b) of this section, the Administrator and the Comptroller General of the United States, or any of their duly authorized representatives, shall have access for the purpose of aduit and examination to any books, documents, papers, and records of such receipts which, in the opinion of the Administrator or the Comptroller General, may be related or pertinent to such financial assistance.

[40 FR 29080, July 10, 1975, as amended at 43 FR 21890, May 22, 1978]

APPENDIX A TO PART 256—CERTIFICATE

The following is the form of the certificate to be executed by each person signing a pre-application or application:

_____ (Name of Person) certifies that he is the Chief Executive Officer of _____ (Name of Agency or Organization); that he is authorized to sign and file with the Federal Railroad Administrator this (pre-application or application); that he has carefully examined all of the statements contained in the (pre-application or application) relating to _____; that he has knowledge of the matters set forth therein and that all statements made and matters set forth therein are true and correct to the best of his knowledge, information and belief.

[43 FR 21890, May 22, 1978]

PART 260—REGULATIONS GOVERNING LOANS AND LOAN GUARANTEES UNDER THE RAILROAD REHABILITATION AND IMPROVEMENT FINANCING PROGRAM

Subpart A—Overview

Sec.
260.1 Program authority.
260.3 Definitions.
260.5 Eligible purposes.
260.7 Priority consideration.
260.9 Loan terms.
260.11 Investigation charge.
260.13 Credit reform.
260.15 Credit risk premium.

Subpart B—FRA Policies and Procedures for Evaluating Applications for Financial Assistance

260.17 Credit risk premium analysis.
260.19 Preapplication meeting.

Subpart C—Applications for Financial Assistance

260.21 Eligibility.
260.23 Form and content of application generally.
260.25 Additional information for Applicants not having a credit rating.
260.27 Additional information for loan guarantees.
260.29 Third party consultants.
260.31 Execution and filing of the application.
260.33 Information requests.
260.35 Environmental assessment.

Subpart D—Standards for Maintenance of Facilities Involved in the Project

260.37 Applicability.
260.39 Maintenance standards.
260.41 Inspection and reporting.
260.43 Impact on other laws.

Subpart E—Procedures To Be Followed in the Event of Default

260.45 Events of default for guaranteed loans.
260.47 Events of default for direct loans.
260.49 Avoiding defaults.

Subpart F—Loan Guarantees—Lenders

260.51 Conditions of guarantee.
260.53 Lenders' functions and responsibilities.
260.55 Lender's loan servicing.

AUTHORITY: 45 U.S.C. 821, 822, 823; 49 CFR 1.49.

SOURCE: 65 FR 41841, July 6, 2000, unless otherwise noted.

Subpart A—Overview

§ 260.1 Program authority.

Section 502 of the Railroad Revitalization and Regulatory Reform Act of 1976, as amended, 45 U.S.C. 821 *et seq.*, authorizes the Secretary of Transportation to provide direct loans and loan guarantees to State and local governments, government sponsored authorities and corporations, railroads, and joint ventures that include at least one railroad. The Secretary's authority has been delegated to the Administrator of the Federal Railroad Administration, an agency of the Department of Transportation.

§ 260.3 Definitions.

As used in this part—

(a) *Act* means the Railroad Revitalization and Regulatory Reform Act of 1976, as amended, 45 U.S.C. 821 *et seq*.

(b) *Administrator* means the Federal Railroad Administrator, or his or her representative.

(c) *Applicant* means any State or local government, government sponsored authority or corporation, railroad, or group of two or more entities, at least one of which is a railroad, participating in a joint venture, that submits an application to the Administrator for a direct loan or the guarantee of an existing obligation under which it is an obligor or for a commitment to guarantee a new obligation.

(d) *Borrower* means an Applicant that has been approved for, and has received, financial assistance under this part.

(e) *Credit risk premium* means that portion of the total subsidy cost to the Government of a direct loan or loan guarantee that is not covered by Federal appropriations and which must be paid by Applicant or its non-Federal infrastructure partner before that direct loan can be disbursed or loan guarantee can be issued.

(f) *Direct loan* means a disbursement of funds by the Government to a non-federal borrower under a contract that requires the repayment of such funds.

(g) *FRA* means the Federal Railroad Administration.

(h) *Financial assistance* means a direct loan, or a guarantee of a new loan issued under this part.

(i) *Holder* means the current owner of an obligation or the entity retained by the owner to service and collect an obligation which is guaranteed under the provisions of this part.

(j) *Including* means including but not limited to.

(k) *Infrastructure partner* means any non-Federal source of the Credit Risk Premium which must be paid to the Administrator in lieu of, or in combination with, an appropriation in connection with financial assistance provided under this part.

(l) *Intermodal* means of or relating to the connection between rail service and other modes of transportation, including all parts of facilities at which such connection is made.

(m) *Lender* means the non-Federal entity making a loan to an Applicant for which a loan guarantee under this part is sought.

(n) *Loan guarantee* means any guarantee, insurance, or other pledge with respect to the payment of all or a part of the principal or interest on any debt obligation of a non-Federal borrower to a non-Federal Lender, but does not include the insurance of deposits, shares, or other withdrawable accounts in financial institutions.

(o) *Obligation* means a bond, note, conditional sale agreement, equipment trust certificate, security agreement, or other obligation.

(p) *Obligor* means the debtor under an obligation, including the original obligor and any successor or assignee of such obligor.

(q) *Project* means the purpose for which financial assistance is requested.

(r) *Railroad* means a rail carrier subject to part A of subtitle IV of title 49, United States Code.

(s) *Subsidy cost of a direct loan* means the net present value, at the time when

the direct loan is disbursed, of the following estimated cash flows:

(1) Loan disbursements;

(2) Repayments of principal; and

(3) Payments of interest and other payments by or to the Government over the life of the loan after adjusting for estimated defaults, prepayments, fees, penalties, and other recoveries; including the effects of changes in loan terms resulting from the exercise by the borrower of an option included in the loan contract.

(t) *Subsidy cost of a loan guarantee* means the net present value, at the time when the guaranteed loan is disbursed, of the following estimated cash flows:

(1) Payments by the Government to cover defaults, delinquencies, interest subsidies, or other payments; and

(2) The payments to the Government including origination and other fees, penalties and recoveries.

§ 260.5 Eligible purposes.

(a) Financial assistance under this part is available solely to:

(1) Acquire, improve, or rehabilitate intermodal or rail freight or passenger equipment or facilities, including track, components of track, bridges, yards, buildings, and shops;

(2) Refinance outstanding debt incurred for purposes described in paragraph (a)(1) of this section; or

(3) Develop or establish new intermodal or railroad facilities.

(b) Financial assistance under this part cannot be used for railroad operating expenses.

§ 260.7 Priority consideration.

When evaluating applications, the Administrator will give priority consideration (but not necessarily in the following order) to projects that:

(a) Enhance public safety;

(b) Enhance the environment;

(c) Promote economic development;

(d) Enable United States companies to be more competitive in international markets;

(e) Are endorsed by the plans prepared under section 135 of title 23, United States Code, by the State or States in which they are located; or

(f) Preserve or enhance rail or intermodal service to small communities or rural areas.

§ 260.9 Loan terms.

The maximum repayment period for direct loans and guaranteed loans under this part is 25 years from the date of execution. The interest rate on direct loans will be equal to the rate on Treasury securities of a similar term. In general, the financial assistance provided will be required to be repaid prior to the end of the useful life of the project it is used to fund.

§ 260.11 Investigation charge.

(a) Applicants for financial assistance under this part may be required to pay an investigation charge of up to one-half of one percent of the principal amount of the direct loan or portion of the loan to be guaranteed.

(b) When an investigation charge is assessed, one-half of the investigation charge shall be paid by Applicant at the time a formal application is submitted to FRA.

(c) Within 60 days after the date of filing of the application, Applicant shall pay to the Administrator the balance of the investigation charge.

§ 260.13 Credit reform.

The Federal Credit Reform Act of 1990, 2 U.S.C. 661, requires Federal agencies to set aside the subsidy cost of new credit assistance provided in the form of direct loans or loan guarantees. The subsidy cost will be the estimated long term cost to the Government of the loan or loan guarantee. The subsidy cost associated with each direct loan or loan guarantee, which the Administrator must set aside, may be funded by Federal appropriations, direct payment of a Credit Risk Premium by the Applicant or a non-Federal infrastructure partner on behalf of the Applicant, or any combination thereof.

§ 260.15 Credit risk premium.

(a) Where available Federal appropriations are inadequate to cover the subsidy cost, a non-Federal infrastructure partner may pay to the Administrator a Credit Risk Premium adequate to cover that portion of the subsidy

cost not covered by Federal appropriations. Where there is no Federal appropriation, the Credit Risk Premium must cover the entire subsidy cost.

(b) The amount of the Credit Risk Premium required for each direct loan or loan guarantee, if any, shall be established by the Administrator. The Credit Risk Premium shall be determined based on the credit risk and anticipated recovery in the event of default, including the recovery of collateral.

(c) The Credit Risk Premium must be paid before the disbursement of a direct or guaranteed loan. Where the borrower draws down the direct or guaranteed loan in several increments, the borrower may pay a portion of the total Credit Risk Premium for each increment equal to the proportion of that increment to the total amount of the direct or guaranteed loan.

(d) Each direct loan and loan guarantee made by the Administrator will be included in one cohort of direct loans or one cohort of loan guarantees, respectively, made during that same fiscal year, or longer period, as may be determined by the Administrator. When all obligations in a cohort have been satisfied or liquidated, the amount of Credit Risk Premiums, paid by applicants or infrastructure partners, remaining in the cohort, after deductions made to mitigate losses from any loan or loan guarantee in the cohort, together with interest accrued thereon, will be repaid on a pro rata basis to each original payor of a Credit Risk Premium for any obligation which was fully satisfied. If the Administrator's estimate of the default risk cost of each loan is accurate, the aggregate of Credit Risk Premiums associated with each cohort of loans will fully offset all losses in the cohort and none will remain to be returned to the payees.

Subpart B—FRA Policies and Procedures for Evaluating Applications for Financial Assistance

§ 260.17 Credit risk premium analysis.

(a) When Federal appropriations are not available to cover the total subsidy cost, the Administrator will determine the Credit Risk Premium necessary for each direct loan or loan guarantee by estimating the credit risk and the potential recovery in the event of a default of each project evaluating the factors described in paragraphs (b) and (c) of this section.

(b) Establishing the credit risk.

(1) Where an Applicant has received a recent credit rating from one or more nationally recognized rating agencies, that rating will be used to estimate the credit risk.

(2) Where an Applicant has not received a credit rating from a credit rating agency, the Administrator will determine the credit risk based on an evaluation of the following factors:

(i) Business risk, based on Applicant's:

(A) Industry outlook;

(B) Market position;

(C) Management and financial policies;

(D) Capital expenditures; and

(E) Operating efficiency.

(ii) Financial risk, based on Applicant?s past and projected:

(A) Profitability;

(B) Liquidity;

(C) Financial strength;

(D) Size; and

(E) Level of capital expenditures; and

(iii) Project risk, based on the proposed project's:

(A) Potential for improving revenues, profitability and cash flow from operations; and

(B) Reliance on third parties for success.

(c) The potential recovery in the event of a default will be based on:

(1) The nature of the Applicant's assets; and

(2) Liquidation value of the collateral offered, including the terms and conditions of the lien securing the collateral.

§ 260.19 Preapplication meeting.

Potential Applicants may request a meeting with the FRA Associate Administrator for Railroad Development to discuss the nature of the project being considered. Applicants must be prepared to provide at least the following information:

(a) Applicant's name, address, and contact person;

(b) Name of the proposed infrastructure partner(s), if any, including the identification of potential amounts of funding from each;

(c) Amount of the direct loan or loan guarantee request, and a description of the technical aspects of the project including a map of the existing railroad lines with the location of the project indicated;

(d) Brief description and estimate of the economic impact, including future demand for service, improvements that can be achieved, the project's relation to the priorities listed in § 260.7, along with any feasibility, market or other studies that may have been done as attachments;

(e) Amount of Applicant's equity and a description of collateral offered, with estimated values, including the basis of such, to be offered as security for the loan;

(f) If applicable, the names and addresses of the Applicant's parent, affiliates, and subsidiary corporations, if any, and a description of the ownership relationship and the level of guarantee, if any, to be offered;

(g) For existing companies, a current balance sheet and an income statement not more than 90 days old and financial statements for the borrower and any parent, affiliates, and subsidiaries for at least the four most recent years; and

(h) Information relevant to the potential environmental impacts of the project in the context of applicable Federal law.

Subpart C—Applications for Financial Assistance

§ 260.21 Eligibility.

The Administrator may make a direct loan to an Applicant, or guarantee the payment of the principal balance and any interest of an obligation of an Applicant prior to, on, or after the date of execution or the date of disbursement of such obligation, if the proceeds of such direct loan or obligation shall be, or have been, used by the Applicant for the eligible purposes listed in § 260.5(a)(1), (2), and (3).

§ 260.23 Form and content of application generally.

Each application shall include, in the order indicated and identified by applicable paragraph numbers and letters corresponding to those used in this section, the following information:

(a) Full and correct name and principal business address of the Applicant;

(b) Date of Applicant's incorporation, or organization if not a corporation, and name of the government, State or territory under the laws of which it was incorporated or organized. If Applicant is a partnership, association, or other form of organization other than a corporation, a full description of the organization should be furnished;

(c) Name, title, and address of the person to whom correspondence regarding the application should be addressed.

(d) A statement of whether the project involves another railroad or other participant, through joint execution, coordination, or otherwise; if so, description of the relative participation of Applicant and such other railroad or participant, including financial statements (if applicable) and financing arrangements of each participant, portion of the work to be performed by each participant, and anticipated level of usage of the equipment or facility of each participant when the work is completed, along with a statement by a responsible officer or official of the other railroad or participant that the information provided reflects their agreement on these matters;

(e) A detailed description of the amount and timing of the financial assistance that is being requested and its purpose or purposes, including:

(1) Detailed description of the project and its purpose or purposes;

(2) A description of all facilities or equipment and the physical condition of such facilities or equipment included in or directly affected by the proposed project;

(3) Each part or sub-part into which the project may reasonably be divided and the priority and schedule of expenditure for each part or sub-part; and

(4) Proposed dates of commencement and completion of the project and estimated timing of the expenditure of the proceeds of the obligation;

(5) A map of Applicant's existing railroad with location of project indicated, if appropriate.

(f) A listing and description of the collateral to be offered the Administrator in connection with any financial assistance provided; Applicant's opinion of the value of this security and the basis for such opinion; in the case of leased equipment to be rehabilitated or improved with the proceeds of the obligation proposed to be guaranteed, Applicant shall state, in addition to the above, whether the lease provides for, or the lessor will permit, encumbrance of the leasehold or subordination of the lessor's interest in the equipment to the Administrator;

(g) A statement, in summary form, showing financial obligations to or claims against the United States or obligations for which the United States is guarantor, if any, by Applicant or any affiliated corporate entity of the Applicant or the Applicant's parent as of the date of the application, including:

(1) Status of any claims under litigation; and

(2) Any other debits or credits existing between the Applicant and the United States, showing the department or agency involved in such loans, claims and other debts;

(h) To the extent such information is available, an analysis that includes:

(1) A statement, together with supporting evidence including copies of all market analyses and studies that have been performed to determine present and future demand for rail services or facilities, that the financing is justified by present and future probable demand for rail services or facilities, will meet existing needs for such services or facilities, and will provide shippers or passengers with improved service;

(2) Description of the impact of the project upon the projected freight or passenger traffic to be originated, terminated, or carried by the Applicant for at least the five years immediately following completion of the project;

(3) Explanation of the manner in which the project will increase the economical and efficient utilization of equipment and facilities; and

(4) Description of cost savings or any other benefit which would accrue to the Applicant from the project;

(i) A statement as to how the project will contribute to, or enhance, the safe operation of the railroad, considering such factors as the occupational safety and health of the employees and the improvement of the physical and other conditions that have caused or may cause serious injury or loss of life to the public or significant property damage;

(j) A statement of the Applicant's maintenance program for its entire rail system and planned maintenance program for the equipment or facilities financed by the proceeds of the financial assistance;

(k) A certified statement in the form contained in § 260.31(d) that Applicant will pay to the Administrator, in accordance with § 260.11, the investigation charge with respect to the application.

(l) Information relevant to the potential environmental impacts of the project in the context of applicable Federal laws;

(m) Any additional information that the Applicant deems appropriate to convey a full and complete understanding of the project, the project's relations to the priorities listed in § 260.7, and its impact, or to assist the Administrator in making the statutorily prescribed findings; and

(n) Any other information which the Administrator may deem necessary concerning an application filed under this part.

(o) Railroad applicants must also submit a copy of application for financing for the project in the private sector, including terms requested, from at least one commercial lender, and its response refusing to provide such financing.

§ 260.25 Additional information for Applicants not having a credit rating.

Each application submitted by Applicants not having a recent credit rating from one or more nationally recognized rating agencies shall include, in the order indicated and identified by applicable numbers and letters corresponding to those used in this section, the following information:

(a) A narrative statement detailing management's business plan to enhance Applicant's ability to provide

rail services including a discussion of the following:

(1) Applicant's current and prospective traffic base, including by commodity and geographic region, major markets served, major interchange points, and market development plans;

(2) Applicant's current operating patterns, and plans, if any, to enhance its ability to serve its current and prospective traffic base;

(3) System-wide plans to maintain equipment and rights-of-way at current or improved levels; and

(4) Specific plans for rationalization of marginal or uneconomic services;

(b) Detailed financial information, including:

(1) Financial statements prepared by a Certified Public Accountant (audited, if available), for the four calendar years immediately preceding the date of filing of the application, including:

(i) A copy of Applicant's most recent year-end general balance sheet and a copy of Applicant's most recent unaudited general balance sheet; and

(ii) Applicant's most recent annual income statement and a spread sheet showing unaudited monthly and year-to-date income statement data up to the date the application is filed;

(2) Projected financial statements, including spread sheets showing for each of the four years subsequent to the year in which the application is filed, both before and after giving effect to the proceeds of the assistance requested in the application:

(i) Forecasted annual income statement;

(ii) Forecasted year-end balance sheets. These spread sheets shall be accompanied by a statement setting forth the bases for such forecasts; and

(iii) A spread sheet showing changes in financial position for the year in which the application is filed, including the period ending on the date of the application based upon actual data and the period from the date of the application to the end of the year, based upon estimated and forecasted data;

(c) Capital spending plans for the next five years;

(d) Cash flow projections;

(e) Contingency plans for termination of the project before completion, if necessary; and

(f) A narrative description of Applicant's management team, including:

(1) Rail experience of top management;

(2) Management's plans for achieving growth and its long-term capital spending plan; and

(3) A narrative description of Applicant's workforce and the historical rate of employee turnover.

§ 260.27 Additional information for loan guarantees.

Applications for a loan guarantee shall also include in the order indicated and identified by applicable numbers and letters corresponding to those used in this section, the following information:

(a) With respect to each existing obligation to be refinanced or proposed obligation:

(1) A certified copy of proposed or executed obligation agreements;

(2) A detailed description of the obligation, and a description of the series or issue of which the obligation is, or will be, a part, including:

(i) Effective date, or anticipated effective date;

(ii) Where a guarantee is sought for an outstanding obligation being refinanced, actual effective rate of interest; or where the obligation is new, the terms of the proposed obligation including the proposed effective rate of interest; and

(iii) All related documents, whether executed or proposed;

(3) For an existing obligation, the Applicant's payment history on that obligation; and

(b) With respect to each existing Lender, Holder, or prospective Lender, a statement as to:

(1) Full and correct name and principal business address;

(2) Reference to applicable provisions of law and the charter or other governing instruments conferring authority to do business on the Lender, Holder, or prospective Lender;

(3) Brief statement of the circumstances and negotiations leading to the agreement by the Lender, Holder, or prospective Lender to make the loan;

(4) Brief statement of the nature and extent of any affiliation or business relationship between the Lender, Holder, or prospective Lender and the Applicant or any of Applicant's directors, partners, or principal executive officers; and.

(5) Full and complete statement of all sums to be provided by the Lender or Holder, or to be provided by the prospective Lender in connection with the proposed obligation including:

(i) Name and address of each person to whom the payment has been made or will be made and nature of any affiliation, association, or prior business relationship between any person named in this paragraph and the Lender, Holder or prospective Lender or any of its directors, partners, or officers; and

(ii) Amount of the cash payment, or the nature and value of other consideration.

§ 260.29 Third party consultants.

Applicants may utilize independent third-party consultants to prepare a financial evaluation of the proposed project and the applicant, if approved by FRA. Providing such an evaluation would greatly assist FRA in the evaluation of the application and would significantly reduce the time necessary for FRA to process the application. We encourage the use of third party consultants.

§ 260.31 Execution and filing of the application.

(a) The original application shall bear the date of execution, be signed in ink by or on behalf of the Applicant, and shall bear the corporate seal in the case of an Applicant which is a corporation. Execution shall be by all partners if a partnership, unless satisfactory evidence is furnished of the authority of a partner to bind the partnership, or if a corporation, an association or other similar form of organization, by its president or other executive officer having knowledge of the matters therein set forth. Persons signing the application on behalf of the Applicant shall also sign a certificate in form as follows:

(Name of official) certifies that he or she is the (Title of official) of the (Name of Applicant); that he or she is authorized on the part of the Applicant to sign and file with the Administrator this application and exhibits attached thereto; that the consent of all parties whose consent is required, by law or by binding commitment of the Applicant, in order to make this application has been given; that he or she has carefully examined all of the statements contained in such application and the exhibits attached thereto and made a part thereof relating to the aforesaid (Name of Applicant); that he or she has knowledge of the matters set forth therein and that all such statements made and matters set forth therein are true and correct to the best of his or her knowledge, information, and belief; and that Applicant will pay the balance of the investigation charge in accordance with § 260.11.

(Signature of official)

(Date)

(b) There shall be made a part of the original application the following certificate by the Chief Financial Officer or equivalent officer of the Applicant:

(Name of officer) certifies that he or she is (Title of officer) of (Name of Applicant); that he or she has supervision over the books of accounts and other financial records of the affected Applicant and has control over the manner in which they are kept; that such accounts are maintained in good faith in accordance with the effective accounting practices; that such accounts are adequate to assure that proceeds from the financing being requested will be used solely and specifically for the purposes authorized; that he or she has examined the financial statements and supporting schedules included in this application and to the best of his or her knowledge and belief those statements accurately reflect the accounts as stated in the books of account; and that, other than the matters set forth in the exceptions attached to such statements, those financial statements and supporting schedules represent a true and complete statement of the financial position of the Applicant and that there are no undisclosed assets, liabilities, commitments to purchase property or securities, other commitments, litigation in the courts, contingent rental agreements, or other contingent transactions which might materially affect the financial position of the Applicant.

(Signature of official)

(Date)

(c) The Applicant shall pay the investigation charge in accordance with § 260.11.

(d) The application shall be accompanied by a transmittal letter in form as follows:

Federal Railroad Administrator, c/o Associate Administrator for Railroad Development, Federal Railroad Administration, Washington, D.C. 20590

Re: Application for financial assistance under the Railroad Rehabilitation and Improvement Financing Program.

Dear Sir or Madam: Being duly authorized by (jointly and severally/if more than one) (the ''Applicant'') to convey the understandings hereinafter set forth, I respectfully submit this application and remit its investigation fee in the amount equal to one-half the total investigation fee established by the Administrator. By this filing, Applicant requests the Administrator to investigate the application and make the necessary findings upon which Applicant's eligibility for a direct loan or loan guarantee may be determined. Applicant understands that neither the acceptance of this filing, the deposit of the investigation charge, nor the commencement of an investigation acknowledges the sufficiency of the application's form, content or merit. Furthermore, Applicant understands that the Administrator will incur numerous expenses by this filing with respect to the investigation of the application, the appraisal of security being offered, and the making of the necessary determinations and findings, and promises to pay, within 60 days, the remainder of the investigation fee required by the Administrator. Applicant understands that the Administrator will establish the amount of Credit Risk Premium due from Applicant, if any, as provided in § 260.15. Applicant agrees to pay such Credit Risk Premium prior to the disbursement of direct or guaranteed loan, as appropriate. Such Credit Risk Premium may be refunded as provided in § 260.15.

Respectfully submitted.

Applicant(s)
Seal(s) by Its(Their).

(e) The original application and supporting papers, and two copies thereof for the use of the Administrator, shall be filed with the Associate Administrator for Railroad Development of the Federal Railroad Administration, 1120 Vermont Ave., NW., MailStop 20, Washington, DC 20590. Each copy shall bear the dates and signatures that appear in the original and shall be complete in itself, but the signatures in the copies may be stamped or typed.

§ 260.33 Information requests.

If an Applicant desires that any information submitted in its application or any supplement thereto not be released by the Administrator upon request from a member of the public, the Applicant must so state and must set forth any reasons why such information should not be released, including particulars as to any competitive harm which would probably result from release of such information. The Administrator will keep such information confidential to the extent permitted by law.

§ 260.35 Environmental assessment.

(a) The provision of financial assistance by the Administrator under this Part is subject to a variety of environmental and historic preservation statutes and implementing regulations including the National Environmental Policy Act (''NEPA'') (42 U.S.C. 4332 *et seq.*), Section 4(f) of the Department of Transportation Act (49 U.S.C. 303(c)), the National Historic Preservation Act (16 U.S.C. 470(f)), the Coastal Zone Management Act (16 U.S.C. 1451), and the Endangered Species Act (16 U.S.C. 1531). Appropriate environmental/historic preservation documentation must be completed and approved by the Administrator prior to a decision by the Administrator on the applicant's financial assistance request. FRA's ''Procedures for Considering Environmental Impacts'' (''FRA's Environmental Procedures'') (65 FR 28545 (May 26, 1999)) or any replacement environmental review procedures that the FRA may later issue and the NEPA regulation of the Council on Environmental Quality (''CEQ Regulation'') (40 CFR Part 1500) will govern the FRA's compliance with applicable environmental/historic preservation review requirements.

(b) The Administrator, in cooperation with the applicant, has the responsibility to manage the preparation of the appropriate environmental document. The role of the applicant will be determined by the Administrator in accordance with the CEQ Regulation and Environmental Procedures.

(c) Depending on the type, size and potential environmental impact of the project for which the applicant is seeking financial assistance, FRA will need to determine whether the project is categorically excluded from detailed environmental review under FRA's Environmental Procedures and, if not, to

prepare or have prepared an Environmental Assessment leading to an Environmental Impact Statement (EIS) or a Finding of No Significant Impact. At the discretion of the Administrator, Applicants may be required to prepare and submit an environmental assessment of the proposed project or to submit adequate documentation to support a finding that the project is categorically excluded from detailed environmental review. If the applicant is a public agency that has statewide jurisdiction or is a local unit of government acting through a statewide agency, and meets the requirements of section 102(2)(D) of NEPA, the applicant may be requested to prepare the EIS and other environmental documents under the Administrator's guidance.

(d) Applicants are strongly urged to consult with the Associate Administrator for Railroad Development at the earliest possible stage in project development in order to assure that the environmental/historic preservation review process can be completed in a timely manner.

(e) Applicants may not initiate any activities that would have an adverse environmental impact or limit the choice of reasonable alternatives in advance of the completion of the environmental review process. This does not preclude development by applicants of plans or designs or performance of other work necessary to support the application for financial assistance.

Subpart D—Standards for Maintenance of Facilities Involved in the Project

§ 260.37 Applicability.

This subpart prescribes standards governing the maintenance of facilities that are being, or have been, acquired, rehabilitated, improved, or constructed with the proceeds of a direct loan or a guaranteed loan issued under this part for the period during which any portion of the principal or interest of such obligation remains unpaid.

§ 260.39 Maintenance standards.

(a) When the proceeds of a direct loan or an obligation guaranteed by the Administrator under this part are, or were, used to acquire, rehabilitate, improve or construct track, roadbed, and related structures, Borrower shall, as long as any portion of the principal or interest of such obligation remains unpaid, maintain such facilities in at least the highest track class, as defined by FRA Track Safety Standards in part 213 of this chapter, specified in the Application at which the rehabilitated, improved, acquired, or constructed track is to be operated upon completion of the project.

(b) When the proceeds of a direct loan or an obligation guaranteed by the Administrator under this part are, or were, used for equipment or facilities, the Borrower shall, during the period in which any portion of the principal or interest in such obligation remains unpaid, maintain such equipment or facilities in a manner consistent with sound engineering and maintenance practices and in a condition that will permit the level of use that existed upon completion of the acquisition, rehabilitation, improvement or construction of such equipment or facilities.

§ 260.41 Inspection and reporting.

(a) Equipment or facilities subject to the provisions of this subpart may be inspected at such times as the Administrator deems necessary to assure compliance with the standards set forth in § 260.39. Each Borrower shall permit representatives of the FRA to enter upon its property to inspect and examine such facilities at reasonable times and in a reasonable manner. Such representatives shall be permitted to use such testing devices as the Administrator deems necessary to insure that the maintenance standards imposed by this subpart are being followed.

(b) Each Borrower shall submit annually to the Administrator financial records and other documents detailing the maintenance and inspections performed which demonstrate that the Borrower has complied with the standards in § 260.39.

§ 260.43 Impact on other laws.

Standards issued under this subpart shall not be construed to relieve the Borrower of any obligation to comply with any other Federal, State, or local law or regulation.

Subpart E—Procedures To Be Followed in the Event of Default

§ 260.45 Events of default for guaranteed loans.

(a) If the Borrower is more than 30 days past due on a payment or is in violation of any covenant or condition of the loan documents and such violation constitutes a default under the provisions of the loan documents, Lender must notify the Administrator in writing and must continue to submit this information to the Administrator each month until such time as the loan is no longer in default; and the Administrator will pay the Lender of the obligation, or the Lenders's agent, an amount equal to the past due interest on the guaranteed portion of the defaulted loan. This payment will in no way reduce the Borrower's obligation to the Lender to make all payments of principal and interest in accordance with the note. If the loan is brought current, the Lender will repay to the Agency any interest payments made by the Agency, plus accrued interest at the note rate.

(b) If the default has continued for more than 90 days, the Administrator will pay to the Lender, or the Lender's agent, 90 percent of the unpaid guaranteed principal. If, subsequent to this payment being made, the default is cured and liquidation is no longer appropriate, the Lender will repay such funds to the Administrator, plus interest at the note rate.

(c) After the default has continued for more than 90 days, the Lender shall expeditiously submit to the Administrator, in writing, its proposed detailed plan to resolve the default by liquidating the collateral or by any other means. If the resolution will require the liquidation of the collateral, then the Lender's plan shall include:

(1) Proof adequate to establish that the Lender is legally in possession of the obligation, or is the agent for a Holder who is legally in possession of the obligation, and a statement of the current loan balance and accrued interest to date and the method of computing the interest;

(2) A full and complete list of all collateral, including any personal and corporate guarantees;

(3) The recommended liquidation methods for making the maximum collection possible and the justification for such methods, including recommended action for acquiring and disposing of all collateral and collecting from any guarantors;

(4) Necessary steps for preservation of the collateral;

(5) Copies of the Borrower's latest available financial statements;

(6) Copies of any guarantor's latest available financial statements;

(7) An itemized list of estimated liquidation expenses expected to be incurred along with justification for each expense;

(8) A schedule to periodically report to the FRA on the progress of liquidation;

(9) Proposed protective bid amounts on collateral to be sold at auction and a breakdown to show how the amounts were determined;

(10) If a voluntary conveyance is considered, the proposed amount to be credited to the guaranteed debt;

(11) Legal opinions, as appropriate;

(12) The Lender will obtain an independent appraisal on all collateral securing the loan which will reflect the fair market value and potential liquidation value. In order to formulate a liquidation plan that maximizes recovery, the appraisal shall consider the presence of hazardous substances, petroleum products, or other environmental hazards, which may adversely impact the market value of the collateral; and

(13) The anticipated expenses associated with the liquidation will be considered a cost of liquidation.

(d) The Administrator will inform the Lender in writing whether the Administrator concurs in the Lender's liquidation plan. Should the Administrator and the Lender not agree on the liquidation plan, negotiations will take place between the Administrator and the Lender to resolve the disagreement. When the liquidation plan is approved by the Administrator, the Lender will proceed expeditiously with liquidation. The liquidation plan may be modified when conditions warrant. All modifications must be approved in writing by the Administrator prior to implementation.

(e) Lender will account for funds during the period of liquidation and will provide the Administrator with reports at least quarterly on the progress of liquidation including disposition of collateral, resulting costs, and additional procedures necessary for successful completion of the liquidation.

(f) Within 30 days after final liquidation of all collateral, the Lender will prepare and submit to the Administrator a final report in which the Lender must account for all funds during the period of liquidation, disposition of the collateral, all costs incurred, and any other information necessary for the successful completion of liquidation. Upon receipt of the final accounting and report of loss, the Administrator may audit all applicable documentation to confirm the final loss. The Lender will make its records available and otherwise assist the Administrator in making any investigation.

(g) The Administrator shall be subrogated to all the rights of the Lender, or if Lender is agent for a Holder then to all of the rights of the Holder, with respect to the Borrower to the extent of the Administrator's payment to the Lender under this section.

(h) When the Administrator finds the final report to be proper in all respects:

(1) All amounts recovered in liquidation shall be paid to the Administrator; and

(2) The remaining obligation of the Administrator to the Lender under the guarantee, if any, will be paid directly to Lender by the Administrator.

(i) The Administrator shall not be required to make any payment under paragraphs (a) and (b) of this section if the Administrator finds, before the expiration of the periods described in such subsections, that the default has been remedied.

(j) The Administrator shall have the right to charge Borrower interest, penalties and administrative costs, including all of the United States' legally assessed or reasonably incurred expenses of its counsel and court costs in connection with any proceeding brought or threatened to enforce payment or performance under applicable loan documents, in accordance with OMB Circular A–129 (*www.whitehouse.gov/omb*), as it may be revised from time to time.

§ 260.47 Events of default for direct loans.

(a) Upon the Borrower's failure to make a scheduled payment, or upon the Borrower's violation of any covenant or condition of the loan documents which constitutes a default under the provisions of the loan documents, the Administrator, at the Administrator's discretion may:

(1) Exercise any and all remedies available under the provisions of the loan agreement and other loan documents, including any guarantees, or inherent in law or equity;

(2) Terminate further borrowing of funds;

(3) Take possession of assets pledged as collateral; and

(4) Liquidate pledged collateral.

(b) The Administrator shall have the right to charge Borrower interest, penalties and administrative costs, including all of the United States' legally assessed or reasonably incurred expenses of its counsel and court costs in connection with any proceeding brought or threatened to enforce payment or performance under applicable loan documents, in accordance with OMB Circular A–129, as it may be revised from time to time.

§ 260.49 Avoiding defaults.

Borrowers are encouraged to contact the Administrator prior to the occurrence of an event of default to explore possible avenues for avoiding such an occurrence.

Subpart F—Loan Guarantees—Lenders

§ 260.51 Conditions of guarantee.

(a) The percentage of the obligation for which Applicant seeks a guarantee is a matter of negotiation between the Lender and the Applicant, subject to the Administrator's approval. The maximum percentage of the total obligation that the Administrator will guarantee is 80 percent. The amount of guarantee allowed will depend on the total credit quality of the transaction and the level of risk believed to be assumed by the Administrator.

(b) A guarantee under this part constitutes an obligation supported by the

full faith and credit of the United States and is incontestable except for fraud or misrepresentation of which a Lender or Holder has actual knowledge at the time it becomes such Lender or Holder or which a Lender or Holder participates in or condones. In addition, the guarantee will be unenforceable by the Lender or the Holder to the extent any loss is occasioned by the violation of usury laws, negligent servicing, or failure to obtain the required security regardless of the time at which the Administrator acquires knowledge thereof. Any losses occasioned will be unenforceable to the extent that loan funds are used for purposes other than those specifically approved by FRA in its guarantee.

(c) The Administrator may guarantee an Applicant's obligation to any Lender provided such Lender can establish to the satisfaction of the Administrator that it has the legal authority and sufficient expertise and financial strength to operate a successful lending program. Loan guarantees will only be approved for Lenders with adequate experience and expertise to make, secure, service, and collect the loans.

(d) The Lender may sell all of the guaranteed portion of the loan on the secondary market, provided the loan is not in default, or retain the entire loan.

(e) When a guaranteed portion of a loan is sold to a Holder, the Holder shall succeed to all rights of the Lender under the loan guarantee to the extent of the portion purchased. The Lender will remain bound to all obligations under the loan guarantee and the provisions of this part. In the event of material fraud, negligence or misrepresentation by the Lender or the Lender's participation in or condoning of such material fraud, negligence or misrepresentation, the Lender will be liable for payments made by the Agency to any Holder.

§ 260.53 Lenders' functions and responsibilities.

Lenders have the primary responsibility for the successful delivery of the program consistent with the policies and procedures outlined in this part. All Lenders obtaining or requesting a loan guarantee from the Administrator are responsible for:

(a) *Loan processing*. Lender shall be responsible for all aspects of loan processing, including:

(1) Processing applications for the loan to be guaranteed;

(2) Developing and maintaining adequately documented loan files;

(3) Recommending only loan proposals that are eligible and financially feasible;

(4) Obtaining valid evidence of debt and collateral in accordance with sound lending practices;

(5) Supervising construction, where appropriate;

(6) Distributing loan funds;

(7) Servicing guaranteed loans in a prudent manner, including liquidation if necessary; and

(8) Obtaining the Administrator's approval or concurrence as required in the loan guarantee documentation;

(b) *Credit evaluation*. Lender must analyze all credit factors associated with each proposed loan and apply its professional judgment to determine that the credit factors, considered in combination, ensure loan repayment. The Lender must have an adequate underwriting process to ensure that loans are reviewed by other than the originating officer. There must be good credit documentation procedures;

(c) *Environmental responsibilities*. Lender has a responsibility to become familiar with Federal environmental requirements; to consider, in consultation with the prospective borrower, the potential environmental impacts of their proposals at the earliest planning stages; and to develop proposals that minimize the potential to adversely impact the environment. Lender must alert the Administrator to any controversial environmental issues related to a proposed project or items that may require extensive environmental review. Lender must assist borrowers as necessary to comply with the environmental requirements outlined in this part. Additionally, Lender will assist in the collection of additional data when the Agency needs such data to complete its environmental review of the proposal; and assist in the resolution of environmental problems;

(d) *Loan closing*. The Lender will conduct or arrange for loan closings; and

(e) *Fees and Charges*. The Lender may establish charges and fees for the loan provided they are similar to those normally charged other Applicants for the same type of loan in the ordinary course of business.

§ 260.55 Lender's loan servicing.

(a) The lender is responsible for servicing the entire loan and for taking all servicing actions that are prudent. This responsibility includes but is not limited to the collection of payments, obtaining compliance with the covenants and provisions in the loan documents, obtaining and analyzing financial statements, verification of tax payments, and insurance premiums, and maintaining liens on collateral.

(b) The lender must report the outstanding principal and interest balance on each guaranteed loan semiannually.

(c) At the Administrator's request, the Lender will periodically meet with the Administrator to ascertain how the guaranteed loan is being serviced and that the conditions and covenants of the loan documents are being enforced.

(d) The Lender must obtain and forward to the Administrator the Borrower's annual financial statements within 120 days after the end of the Borrower's fiscal year and the due date of other reports as required by the loan documents. The Lender must analyze the financial statements and provide the Agency with a written summary of the Lender's analysis and conclusions, including trends, strengths, weaknesses, extraordinary transactions, and other indications of the financial condition of the Borrower.

(e) Neither the Lender nor the Holder shall alter, nor approve any amendments of, any loan instrument without the prior written approval of the Administrator.

PART 261—CREDIT ASSISTANCE FOR SURFACE TRANSPORTATION PROJECTS

AUTHORITY: Secs. 1501 *et seq.*, Pub. L. 105–178, 112 Stat. 107, 241, as amended; 23 U.S.C. 181–189 and 315; 49 CFR 1.49.

SOURCE: 64 FR 29753, June 2, 1999, unless otherwise noted.

§ 261.1 Cross-reference to credit assistance.

The regulations in 49 CFR Part 80 shall be followed in complying with the requirements of this part. Title 49, CFR, Part 80 implements the Transportation Infrastructure Finance and Innovation Act of 1998, secs. 1501 *et seq.*, Pub. L. 105–178, 112 Stat. 107, 241.

PART 262—IMPLEMENTATION OF PROGRAM FOR CAPITAL GRANTS FOR RAIL LINE RELOCATION AND IMPROVEMENT PROJECTS

Sec.

262.1 Purpose.
262.3 Definitions.
262.5 Allocation requirements.
262.7 Eligibility.
262.9 Criteria for selection of projects.
262.11 Application process.
262.13 Matching requirements.
262.15 Environmental assessment.
262.17 Combining grant awards.
262.19 Close-out procedures.

AUTHORITY: 49 U.S.C. 20154 and 49 CFR 1.49.

SOURCE: 73 FR 39886, July 11, 2008, unless otherwise note.

§ 262.1 Purpose.

The purpose of this part is to carry out the statutory mandate set forth in 49 U.S.C. 20154 requiring the Secretary of Transportation to promulgate regulations implementing a capital grants program to provide financial assistance for local rail line relocation and improvement projects.

§ 262.3 Definitions.

Administrator means the Federal Railroad Administrator, or his or her delegate.

Allowable costs means those project costs for which Federal funding may be expended under this part. Only construction and construction-related costs will be allowable.

Construction means supervising, inspecting, demolition, actually building, and incurring all costs incidental to building a project described in § 262.9 of this part, including bond costs and other costs related to the issuance of

bonds or other debt financing instruments and costs incurred by the Grantee in performing project related audits, and includes:

(1) Locating, surveying, and mapping;

(2) Track and related structure installation, restoration, and rehabilitation;

(3) Acquisition of rights-of-way;

(4) Relocation assistance, acquisition of replacement housing sites, and acquisition and rehabilitation, relocation, and construction of replacement housing;

(5) Elimination of obstacles and relocation of utilities; and

(6) Any other activities as defined by FRA, including architectural and engineering costs, and costs associated with compliance with the National Environmental Policy Act, National Historic Preservation Act, and related statutes, regulations, and orders.

FRA means the Federal Railroad Administration.

Improvement means repair or enhancement to existing rail infrastructure, or construction of new rail infrastructure, that results in improvements to the efficiency of the rail system and the safety of those affected by the system.

Non-federal share means the portion of the allowable cost of the local rail line relocation or improvement project that is being paid for through cash or in-kind contributions by a State or other non-Federal entity or any combination thereof.

Private entity means any domestic or foreign nongovernmental for-profit or not-for-profit organization.

Project means the local rail line relocation or improvement for which a grant is requested under this section.

Quality of life means the level of social, environmental and economic satisfaction and well being a community experiences, and includes factors such as first responders' emergency response time, impact on emergency services, accessibility to the disabled as required under the Americans with Disabilities Act and section 504 of the Rehabilitation Act of 1973 (as amended), school access, safety, traffic delay and congestion, the environment, grade crossing safety, and noise levels.

Real property means land, including land improvements, structures and appurtenances thereto, excluding movable machinery and equipment.

Relocation means moving a rail line vertically or laterally to a new location. Vertical relocation refers to raising above the current ground level or sinking below the current ground level a rail line. Lateral relocation refers to moving a rail line horizontally to a new location.

Secretary means the Secretary of Transportation.

State except as used in § 262.17, means any of the fifty United States, a political subdivision of a State, and the District of Columbia. In § 262.17, *State* means any of the fifty United States and the District of Columbia.

Tangible personal property means property, other than real property, that has a physical existence and an intrinsic value, including machinery, equipment and vehicles.

§ 262.5 Allocation requirements.

At least fifty percent of all grant funds awarded under this section out of funds appropriated for a fiscal year shall be provided as grant awards of not more than $20,000,000 each. Designated, high-priority projects will be excluded from this allocation formula. FRA will adjust the $20,000,000 amount to reflect inflation for fiscal years beginning after fiscal year 2006 based on the materials and supplies component from the all-inclusive index of the *AAR Railroad Cost Indexes*.

§ 262.7 Eligibility.

(a) A State is eligible for a grant from FRA under this section for any construction project for the improvement of the route or structure of a rail line that either:

(1) Is carried out for the purpose of mitigating the adverse effects of rail traffic on safety, motor vehicle traffic flow, community quality of life, or economic development; or

(2) Involves a lateral or vertical relocation of any portion of the rail line.

(b) Only costs associated with construction as defined in § 262.3 will be considered allowable costs.

§ 262.9 Criteria for selection of projects.

Applicants must submit evidence sufficient for the FRA to determine whether projects proposed for Federal investment are cost-effective in terms of the benefits achieved in relation to the funds expended. To that end, the FRA will consider the anticipated public and private benefits associated with each rail line relocation or improvement project. In evaluating applications, FRA will consider the following factors in determining whether to grant an award to a State under this part.

(a) The capability of the State to fund the rail line relocation project without Federal grant funding;

(b) The requirement and limitation relating to allocation of grant funds provided in § 262.5;

(c) Equitable treatment of various regions of the United States;

(d) The effects of the rail line, relocated or improved as proposed, on motor vehicle and pedestrian traffic, safety, community quality of life, and area commerce;

(e) The effects of the rail line, relocated as proposed, on the freight rail and passenger rail operations on the line;

(f) Any other factors FRA determines to be relevant to assessing the effectiveness and/or efficiency of the grant application in achieving the goals of the national program, including the level of commitment of non-Federal and/or private funds to a project and the anticipated public and private benefits.

§ 262.11 Application process.

(a) All grant applications for opportunities funded under this subsection must be submitted to FRA through *www.grants.gov*. Opportunities to apply will be posted by FRA on *www.grants.gov* only after funds have been appropriated for Capital Grants for Rail Line Relocation Projects. The electronic posting will contain all of the information needed to apply for the grant, including required supporting documentation.

(b) In addition to the information required with an individual application, a State must submit a description of the anticipated public and private benefits associated with each rail line relocation or improvement project described in § 262.7(a)(1) and (2) and the State's assessment of how those benefits outweigh the costs of the proposed project. The determination of such benefits shall be developed in consultation with the owner and user of the rail line being relocated or improved or other private entity involved in the project. The State should also identify any financial contributions or commitments it has secured from private entities that are expected to benefit from the proposed project.

(c) Potential applicants may request a meeting with the FRA Associate Administrator for Railroad Development or his designee to discuss the nature of the project being considered.

§ 262.13 Matching requirements.

(a) A State or other non-Federal entity shall pay at least ten percent of the construction costs of a project that is funded in part by the grant awarded under this section.

(b) The non-Federal share required by paragraph (a) of this section may be paid in cash or in-kind. In-kind contributions that are permitted to be counted under this section are as follows:

(1) A contribution of real property or tangible personal property (whether provided by the State or a person for the state) needed for the project;

(2) A contribution of the services of employees of the State or other non-Federal entity or allowable costs, calculated on the basis of costs incurred by the State or other non-Federal entity for the pay and benefits of the employees, but excluding overhead and general administrative costs;

(3) A payment of any allowable costs that were incurred for the project before the filing of an application for a grant for the project under this part, and any in-kind contributions that were made for the project before the filing of the application; if and to the extent that the costs were incurred or in-kind contributions were made, as the case may be, to comply with a provision of a statute required to be satisfied in order to carry out the project.

(c) In determining whether to approve an application, FRA will consider the feasibility of seeking financial contributions or commitments from private entities involved with the project in proportion to the expected benefits determined under § 262.11(b) that accrue to such entities from the project.

§ 262.15 Environmental assessment.

(a) The provision of grant funds by FRA under this Part is subject to a variety of environmental and historic preservation statutes and implementing regulations including, but not limited to, the National Environmental Policy Act (NEPA) (42 U.S.C. 4332 *et seq.*), Section 4(f) of the Department of Transportation Act (49 U.S.C. 303(c)), the National Historic Preservation Act (16 U.S.C. 470(f)), and the Endangered Species Act (16 U.S.C. 1531). Appropriate environmental and historic documentation must be completed and approved by the Administrator prior to a decision by FRA to approve a project for physical construction. FRA's ''Procedures for Considering Environmental Impacts,'' as posted at *http://www.fra.dot.gov/us/content/252*, the NEPA regulation of the Council on Environmental Quality (40 CFR part 1500) and the Advisory Council on Historic Preservation Protection of Historic Properties regulation (36 CFR part 800) will govern FRA's compliance with applicable environmental and historic preservation review requirements.

(b) States have two options for proceeding with environmental/historic preservation reviews. A State may file an application under subsection § 262.11 seeking funds for preliminary design and environmental/historic preservation compliance for a potentially eligible project and FRA will review and decide on the application as outlined in this Part. Alternatively, a State may proceed with and fund any costs associated with environmental/historic preservation reviews (including environmental assessments and categorical excisions, but not environmental impact statements since there are restrictions on what types of entities can manage an environmental impact statement) and seek reimbursement from FRA for these costs to the extent they otherwise qualify as allowable costs if FRA later approves the project for physical construction and enters into a grant agreement with the State. If a State pays for the compliance work itself, it may apply this cost to the 10% matching requirement if a grant is awarded. Applicants should consult with FRA before beginning any environmental or historic preservation analysis.

§ 262.17 Combining grant awards.

Two or more States, but not political subdivisions of States, may, pursuant to an agreement entered into by the States, combine any part of the amounts provided through grants for a project under this section provided:

(1) The project will benefit each of the States entering into the agreement; and

(2) The agreement is not a violation of the law of any such State.

§ 262.19 Close-out procedures.

(a) Thirty days before the end of the grant period, FRA will notify the State that the period of performance for the grant is about to expire and that close-out procedures will be initiated.

(b) Within 90 days after the expiration or termination of the grant, the State must submit to FRA any or all of the following information, depending on the terms of the grant:

(1) Final performance or progress report;

(2) Financial Status Report (SF–269) or Outlay Report and Request for Reimbursement for Construction Programs (SF–271);

(3) Final Request for Payment (SF–270);

(4) Patent disclosure (if applicable);

(5) Federally-owned Property Report (if applicable)

(c) If the project is completed, within 90 days after the expiration or termination of the grant, the State shall complete a full inspection of all construction work completed under the grant and submit a report to FRA. If the project is not completed, the State shall submit a report detailing why the project was not completed.

(d) FRA will review all close-out information submitted, and adjust payments as necessary. If FRA determines that the State is owed additional

funds, FRA will promptly make payment to the State for any unreimbursed allowable costs. If the State has received more funds than the total allowable costs, the State must immediately refund to the FRA any balance of unencumbered cash advanced that is not authorized to be retained for use on other grants.

(e) FRA will notify the State in writing that the grant has been closed out.

PART 265—NONDISCRIMINATION IN FEDERALLY ASSISTED RAILROAD PROGRAMS

Subpart A—General

Sec.
265.1 Purpose.
265.3 Applicability.
265.5 Definitions.

Subpart B—Requirements

265.7 Nondiscrimination clauses.
265.9 Affirmative action program—General.
265.11 Submission of affirmative action program.
265.13 Contents of affirmative action program.
265.14 Determining the MBE status of a business.
265.14–1 Appeals of determination of MBE status.
265.15 Implementation and maintenance of affirmative action program.
265.17 Review of affirmative action program.

Subpart C—Compliance

265.19 Compliance information.
265.21 Conduct of investigations.
265.23 Procedures for effecting compliance.
265.25 Other information.
APPENDIX A TO PART 265

AUTHORITY: Sec. 905 of the Railroad Revitalization and Regulatory Reform Act of 1976, Pub. L. 94–210, 90 Stat. 31; regulations of the Office of the Secretary of Transportation, 49 CFR 1.49(u).

SOURCE: 42 FR 4286, Jan. 24, 1977, unless otherwise noted.

Subpart A—General

§ 265.1 Purpose.

The purpose of this part is to effectuate the provisions of section 905 of the Railroad Revitalization and Regulatory Reform Act of 1976 (hereinafter referred to as the ''Act'') to ensure that no person in the United States shall on the grounds of race, color, national origin, or sex be excluded from participation in, or denied the benefits of, or be subjected to discrimination under, any project, program or activity funded in whole or in part through financial assistance under the Act, or any provision of law amended by the Act. Nothing contained in these regulations is intended todiminish or supersede the obligations made applicable by either title VI of the Civil Rights Act of 1964, (42 U.S.C. 2000d), or Executive Order No. 11246, (42 U.S.C. 2000e (note)). Subsection (d) of section 905 of the Act authorizes the Secretary to prescribe such regulations and take such actions as are necessary to monitor, enforce, and affirmatively carry out the purposes of that section. This authority coupled with the provisions of section 906 of the Act, which requires the establishment of a Minority Resource Center which is authorized to encourage, promote and assist in the participation by MBE enterprises in the restructuring, improvement, revitalization and maintenance of our Nation's railroads, provides the basis for requirements for the development of affirmative action programs by recipients of Federal financial assistance and certain of their contractors to insure that minorities and MBEs are afforded ample consideration with respect to employment and contractual opportunities produced as a result of the implementation of the Act and other provisions of law amended by the Act.

§ 265.3 Applicability.

This part applies to any project, program, or activity funded in whole or in part through financial assistance provided under the Act, and to any activity funded under any provision of the Regional Rail Reorganization Act of 1973, as amended (45 U.S.C. 701 *et seq.*) or the Rail Passenger Service Act, as amended (45 U.S.C. 501 *et seq.*) amended by the Act including the financial assistance programs listed in appendix A. It applies to contracts awarded to implement the Northeast Corridor Project and to financial assistance programs administered by the United States Railway Association.

§ 265.5 Definitions.

As used in this part, unless the context indicates otherwise:

(a) *Act* means the Railroad Revitalization and Regulatory Reform Act of 1976 (Pub. L. No. 94–210).

(b) *Administrator* means the Federal Railroad Administrator or his delegate.

(c) *Affirmative action program* means the program described in § 265.9 through § 265.15 of this part.

(d) *Agency* means the Federal Railroad Administration.

(e) *Applicant* means persons applying for financial assistance under any of the Rail Acts.

(f) *Contractor* means a prime contractor or a subcontractor who will be paid in whole or in part directly or indirectly from financial assistance provided under the Rail Acts.

(g) [Reserved]

(h) *Includes* means includes but not limited to.

(i) *Minority* means women, Blacks, Hispanic Americans, American Indians, American Eskimos, American Orientals and American Aleuts.

(j) *MBE* means a business concern which is owned and controlled by a minority. For the purpose of this part, *owned and controlled* means a business:

(1) Which is at least 51 per centum owned by one or more minority individuals; or, in the case of a publicly owned business, at least 51 per centum of the stock of which is owned by one or more minority individuals; and

(2) Whose management and daily operations are controlled by one or more such individuals.

(k) *MBE Resource Center* means the Minority Resource Center established in the Department of Transportation pursuant to section 906 of the Act.

(l) *Rail Acts* means the Railroad Revitalization and Regulatory Reform Act of 1976, the Regional Rail Reorganization Act of 1973, as amended (45 U.S.C. 701 *et seq.*) and the Rail Passenger Service Act, as amended (45 U.S.C. 501 *et seq.*).

(m) *Recipient* means a person who receives financial assistance under any of the Rail Acts except under section 602 of the Rail Passenger Service Act, as amended (45 U.S.C. 501 *et seq.*).

(n) *Underutilization* means the condition of having fewer minority employees in a particular job group or fewer awards of contracts to MBEs than would reasonably be expected by their availability for such jobs or awards.

[42 FR 4286, Jan. 24, 1977, as amended at 44 FR 36339, June 21, 1979]

Subpart B—Requirements

§ 265.7 Nondiscrimination clauses.

(a) Each agreement for financial assistance made under any provision of the Rail Acts shall include, or in the case of agreements made prior to the effective date of this part, shall be amended to include, the following clauses:

(1) As a condition to receiving Federal financial assistance under the Railroad Revitalization and Regulatory Reform Act of 1976 (''Act''), or the provisions of the Regional Rail Reorganization Act of 1973, as amended (45 U.S.C. 701 *et seq.*), or the Rail Passenger Service Act of 1970, as amended (45 U.S.C. 501 *et seq.*) amended by the Act (collectively called, together with the Act, the ''Rail Acts''), the recipient hereby agrees to observe and comply with the following:

(i) No person in the United States shall on the ground of race, color, national origin or sex be excluded from participation in, or denied the benefits of, or be subjected to discrimination under, any project, program, or activity funded in whole or in part through such assistance.

(2) The following specific discriminatory actions are prohibited:

(i) A recipient under any project, program or activity to which these clauses apply shall not, directly or through contractual or other arrangements, on the ground of race, color, national origin, or sex:

(A) Deny a person any service, financial aid, or other benefit provided under such project, program or activity;

(B) Provide any service, financial aid, or other benefit to a person which is different, or is provided in a different manner, from that provided to others under such project, program or activity;

(C) Subject a person to segregation or separate treatment in any matter related to his receipt of any service, financial aid or other benefit under such project, program or activity;

(D) Restrict a person in any way in the enjoyment of any advantage or privilege enjoyed by others receiving any service, financial aid or other benefit under such project, program or activity; or

(E) Deny a person an opportunity to participate in such project, program or activity through the provision of services or otherwise or afford him an opportunity to do so which is different from that afforded others under such project, program or activity.

(ii) A recipient, in determining the types of services, financial aid, or other benefits, or facilities which will be provided under any such project, program or activity or the class of persons to whom, or the situations in which such services, financial aid, other benefits, or facilities will be provided under any such project, program or activity, or the class of persons to be afforded an opportunity to participate in any such project, program or activity shall not, directly or through contractual or other arrangements, utilize criteria or methods of administration which have the effect of subjecting persons to discrimination because of their race, color, national origin, or sex, or have the effect of defeating or substantially impairing accomplishment of the objectives of the project, program or activity, with respect to individuals of a particular race, color, national origin or sex.

(iii) In determining the site or location of facilities, a recipient shall not make selections with the purpose or effect of excluding persons from, denying them the benefits of, or subjecting them to discrimination under any project, program or activity to which these clauses apply on the grounds of race, color, national origin or sex, or with the purpose or effect of defeating or substantially impairing the accomplishment of the objectives of these clauses.

(iv) The recipient shall not discriminate against any employee or applicant for employment because of race, color, national origin or sex. Except as otherwise required by the regulations or orders of the Administrator, the recipient shall take affirmative action to insure that applicants for employment are employed, and that employees are treated during employment, without regard to their race, color, national origin or sex. Such action shall include but not be limited to the following: Employment, promotion, demotion, transfer, recruitment or recruitment advertising, layoff or termination, rates of pay or other forms of compensation, and selection for training, including apprenticeship. The recipient agrees to post in conspicuous places, available to employees and applicants for employment, notices to be provided by the agency's representative setting forth the provisions of these nondiscrimination clauses. The recipient understands and agrees that it shall not be an excuse for the recipient's failure to provide affirmative actionthat the labor organizations with which the recipient has a collective bargaining agreement failed or refused to admit or qualify minorities for admission to the union, or that the provisions of such agreements otherwise prevent recipient from implementing its affirmative action program.

(v) The recipient shall not discriminate against any business organization in the award of any contract because of race, color, national origin or sex of its employees, managers or owners. Except as otherwise required by the regulations or orders of the Administrator, the recipient shall take affirmative action to insure that business organizations are permitted to compete and are considered for awards of contracts without regard to race, color, national origin or sex.

(3) As used in these clauses, the services, financial aid, or other benefits provided under a project, program, or activity receiving financial assistance under the Rail Acts include any service, financial aid, or other benefit provided in or through a facility funded through financial assistance provided under the Rail Acts.

(4) The enumeration of specific forms of prohibited discrimination does not limit the generality of the prohibition in paragraph (a)(1)(i) of this section.

(5) These clauses do not prohibit the consideration of race, color, national origin or sex if the purpose and effect are to remove or overcome the consequences of practices or impediments which have restricted the availability of, or participation in, recipient's operations or activities on the grounds of race, color, national origin or sex. Where prior discriminatory or other practice or usage tends, on the grounds of race, color, national origin or sex, to exclude individuals or businesses from participation in, to deny them the benefits of, or to subject them to discrimination under any project, program or activity to which these clauses apply, the recipient must take affirmative action to remove or overcome the effects of the prior discriminatory practice or usage. Even in the absence of prior discriminatory practice or usage to which this partapplies, the recipient is expected to take affirmative action to insure that no person is excluded from participation in or denied the benefits of the project, program or activity on the grounds of race, color, national origin or sex, and that minorities and MBEs are afforded a reasonable opportunity to participate in employment and procurement opportunities that will result from financial assistance provided under the Rail Acts.

(6) The recipient agrees to take such actions as are necessary to monitor its activities and those of its contractors who will be paid in whole or in part with funds provided by the Rail Acts, or from obligations guaranteed by the Administrator pursuant to the Rail Acts, except obligations guaranteed under section 602 of the Rail Passenger Service Act, in order to carry out affirmatively the purposes of paragraph (a)(1) of this section, and to implement the affirmative action program developed and implemented pursuant to 49 CFR part 265.

(7) The recipient shall, in all advertisements for employees, or solicitations for services or materials from business organizations placed by or on behalf of the recipient, in connection with any project, program or activity funded in whole or in part with financial assistance under the Rail Acts, state that all applicants for employment will receive consideration for employment, and all business organizations will receive consideration for an award of a contract, without regard to race, color, national origin or sex.

(8) The recipient shall send to each labor organization or representative of workers with which it has a collective bargaining agreement or other contract or understanding a notice to be provided by the agency's representative, advising the labor organization or workers' representative of the recipient's commitments under section 905 of the Act, and shall post copies of the notice in conspicuous places available to employees and applicants for employment.

(9) The recipient shall comply with all provisions of section 905 of the Act, the Civil Rights Act of 1964, any other Federal civil rights act, and with the rules, regulations, and orders issued under such acts.

(10) The recipient shall furnish all information and reports required by the rules, regulations, and orders of the Administrator, and will permit access to its books, records, and accounts by the Administrator for purposes of investigation to ascertain compliance with rules, regulations, and orders referred to in paragraph (a)(9) of this section.

(11) Recipient shall furnish such relevant procurement information, not included in its affirmative action program as may be requested by the MBE Resource Center. Upon the request of the recipient, the Center shall keep such information confidential to the extent necessary to protect commercial or financial information or trade secrets to the extent permitted by law.

(12) In the event of the recipient's noncompliance with the nondiscrimination clauses of this agreement, or with the provisions of section 905 of the Act, the Civil Rights Act of 1964, or with any other Federal civil rights act, or with any rules, regulations, or orders issued under such acts, this contract will, after notice of such noncompliance, and after affording a reasonable opportunity for compliance, be canceled, terminated, or suspended in whole or in part and the recipient may be declared ineligible for further

Federal financial assistance in accordance with procedures authorized in section 905 of the Act, or as otherwise provided by law.

(13) The recipient shall not enter into any contract or contract modification whether for the furnishing of supplies or services or for the use of real or personal property, including lease arrangements, or for construction, in connection with a project, program or activity which receives financial assistance under the Rail Acts with a contractor debarred from or who has not demonstrated eligibility for Federal or federally assisted contracts, and will carry out such sanctions and penalties for violation of this part as may be imposed upon contractors and subcontractors by the Administrator or any other authorized Federal official. The recipient shall insure that the clauses required by 41 CFR 60–1.46 implementing Executive Order 11246 will be placed in each non-exempt federally assisted construction contract.

(14) The recipient agrees to comply with and implement the written affirmative action program as approved by the Administrator pursuant to § 265.17 of title 49 CFR.

(15) The recipient agrees to notify the Administrator promptly of any law suit or complaint filed against the recipient alleging discrimination on the basis of race, color, national origin or sex.

(16) The recipient shall include the preceding provisions of paragraphs (a) (1) through (15) of this section in every contract or purchase order, whether for the furnishing of supplies or services or for the use of real or personal property, including lease arrangements, or for construction relating to projects, programs or activities financed in whole or in part under the Rail Acts. The recipient shall cause each such contractor or vendor to include the provisions of paragraphs (a) (1) through (15) of this section in every subcontract. The recipient will take such action with respect to any such contract or purchase order as the Administrator may direct as a means of enforcing such provisions including sanctions for noncompliance; provided, however, that in the event the recipient becomes involved in, or is threatened with, litigation with a contractor or vendor as a result of such direction by the Administrator, the recipient may request the United States to enter into such litigation.

§ 265.9 Affirmative action program—General.

Recipients of financial assistance under the Rail Acts and their contractors, as specified herein, shall develop and maintain an affirmative action program to insure that persons and businesses are not discriminated against because of race, color, national origin or sex in programs, projects and activities financed in whole or in part through financial assistance provided under the Rail Acts, and that minorities and MBEs receive a fair proportion of employment and contractual opportunities which will result from such programs, projects and activities.

§ 265.11 Submission of affirmative action program.

(a) Each application for financial assistance under any of the Rail Acts shall, as a condition to its approval and the extension of any financial assistance pursuant to the application, contain or be accompanied by two copies of a written affirmative action program for review by and approval of the Administrator. Recipients that have already entered into an agreement or other arrangement providing for such assistance shall, within 60 days after the effective date of this part, develop and submit to the Administrator two copies of a written affirmative action program for review by and approval of the Administrator and thereafter maintain such program.

(b)(1) Beginning 30 days after the effective date of this part, and until 120 days after such date, each recipient shall require any contractor, as a condition to an award of a contract, for $50,000 or more for services or products on a project receiving federal financial assistance under a program covered by section 905 of the Act:

(i) To furnish to the recipient a written assurance that it will, within 90 days after the date of the award, develop and maintain a written affirmative action program meeting the requirements of this part for the project,

program or activity covered by the contract,

(ii) To require each of its subcontractors receiving an award of a subcontract for $50,000 or more within 120 days after the effective date of this part, to furnish to the contractor as a condition to such an award the written assurance described in paragraph (b)(1)(i) of this section.

(2) Beginning 120 days after the effective date of this part, each recipient shall require as a condition to the award of a contract or subcontract of $50,000 or more that the contractor or subcontractor furnish a certificate to the recipient or contractor as appropriate that a written affirmative action program meeting the requirements of this part has been developed and is being maintained.

(3) Notwithstanding paragraphs (b)(1) and (2) of this section, each contractor or subcontractor having a contract or $50,000 or more but less than 50 employees shall be required to develop and maintain a written affirmative action program only for contracts in accordance with § 265.13(c) of this part.

(4) A recipient or contractor shall not procure supplies or services in less than usual quantities or in a manner which is intended to have the effect of avoiding the applicability of this paragraph.

§ 265.13 Contents of affirmative action program.

(a) *General.* A prerequisite to the development of a satisfactory affirmative action program is the identification and analysis of problem areas inherent in minority employment and utilization of MBEs, and an evaluation of opportunities for utilization of minority group personnel and MBEs. Therefore, an affirmative action program to guarantee employment and contractual opportunities shall provide for specific actions keyed to the problems and needs of minority persons and MBEs including, where there are deficiencies based on past practices, and with respect to future plans for hiring and promoting employees or awarding contracts, the development of specific goals and timetables for the prompt achievement and maintenance of full opportunities for minority persons and MBEs with respect to programs, projects and activities subject to this part.

(b) *Employment practices.* (1) The affirmative action program for employment showing the level of utilization of minority employees, and establishing a plan to insure representative opportunities for employment for minority persons shall be developed in accordance with the regulations of the Department of Labor at 41 CFR 60–2.

(2) Railroad applicants or recipients shall develop their program for each establishment in their organization and by job categories in accordance with the requirements of the Joint Reporting Committee of the Equal Employment Opportunity Commission and the Department of Labor. Other applicants, recipients or contractors may use any program format or organization which has been approved for use by other Federal agencies enforcing equal opportunity laws.

(3) The affirmative action program shall show the source of statistical data used.

(4) The affirmative action program shall include a listing by job category of all jobs which may be established or filled by the applicant, recipient or contractor as a result of the project, program or activity funded by federal financial assistance under the Rail Acts for the first five years of such project, program or activity or the period during which such project, program or activity will be undertaken, whichever is the lesser (''program period'').

(5) The affirmative action program shall set forth in detail a plan to insure that with respect to the project, program or activity financed in whole or in part through financial assistance under the Rail Acts, minority persons have an opportunity to participate in employment in proportion to the percentage of the minority work force in the area where the applicant's, recipient's or contractor's operations are located as compared to the total work force, and that such minority persons have an equal opportunity for promotion or upgrading. Where appropriate because of prior underutilization of minority employees, the program

shall establish specific goals and timetables to utilize minority employees in such projects, programs or activities in the above-mentioned proportion.

(c) *Contracts.* (1) The affirmative action program shall include details of proposed contracts in excess of $10,000 to be awarded in connection with projects, programs and activities funded in whole or in part through financial assistance under the Rail Acts, including contracts for professional and financial services, for the program period. The details shall include a description of the services or products which will be sought including estimated quantities, the location where the services are to be provided, the manner in which proposals will be solicited (e.g., cost plus fixed fee, fixed price), the manner in which contracts will be awarded (e.g., competitive or sole source). The plan shall also give details as to bidding procedures, and information as to other qualifications for doing business with the applicant, recipient or contractor. Upon request by the applicant, recipient or contractor, any information submitted to the Administrator shall be kept confidential to the extent permitted by law.

(2) The affirmative action program shall review the procurement practices of the applicant, recipient or contractor for the full year preceding the date of the submission of the affirmative action program and evaluate the utilization of MBE in its procurement activities. Such evaluation of utilization of MBEs shall include the following:

(i) An analysis of awards of contracts to MBEs during such year describing the nature of goods and services purchased and the dollar amount involved; and

(ii) A comparison of the percentage of awards of contracts to MBEs (by number of contracts and by total dollar amount involved) to the total procurement activity of the applicant, recipient or contractor for said year.

(3) The affirmative action program shall set forth in detail applicant's, recipient's or contractor's plan to insure that MBEs are afforded a fair and representative opportunity to do business with applicant, recipient or contractor (both in terms of number of contracts and dollar amount involved) for the program period. Such plan shall identify specific actions to be taken to:

(i) Designate a liaison officer who will administer the MBE program;

(ii) Provide for adequate and timely consideration of the availability and potential of MBEs in all procurement decisions;

(iii) Assure that MBEs will have an equitable opportunity to compete for contracts, by arranging solicitation time for the preparation of bids, quantities, specifications, and delivery schedules so as to facilitate the participation of MBEs and by assisting MBEs who are potential contractors in preparing bid materials and in obtaining and maintaining suitable bonding coverage in those instances where bonds are required;

(iv) Maintain records showing that the policies set forth in this part are being complied with;

(v) Submit quarterly reports of the records referred to in paragraph (c)(3)(iv) of this section in such form and manner as the Administrator may prescribe; and

(vi) Where appropriate because of prior underutilization of MBEs, establish specific goals and timetables to utilize MBEs in the performance of contracts awarded.

(d) *Successor organizations.* Where applicant, recipient or contractor is a successor organization, its affirmative action program shall review the hiring and procurement practices of its predecessor organization or organizations.

§ 265.14 Determining the MBE status of a business.

FRA or a recipient may, on the basis of available information, determine that a business is not an MBE within the meaning of this part. This determination shall be final, except as provided in § 265.14–1, for that contract and other contracts being let by that contracting agency at the time of the determination. Businesses may correct deficiencies in their ownership and control and apply as MBEs only for future contracts.

[44 FR 36339, June 21, 1979]

§ 265.14–1 Appeals of determination of MBE status.

(a) *Filing*. Any firm who believes that it has been wrongly determined not to be an MBE under § 265.14 by the FRA or a recipient may file an appeal in writing with the Administrator. The appeal shall be filed no later than 30 days after the date of the determination. The Administrator may extend the time for filing or waive the time limit in the interest of justice, specifying in writing the reasons for so doing. Third parties who have reason to believe that a business has been wrongly denied or granted status as an MBE may advise the Administrator. This information is not considered an appeal pursuant to this section.

(b) *Decision to investigate*. The Administrator ensures that a prompt investigation is made of those cases with investigative merit (except those being reviewed on the merits by the Comptroller General), pursuant to prescribed DOT Title VI (49 CFR part 21) investigation procedures.

(c) *Status during the investigation*. The Administrator may deny the business in question eligibility to participate as an MBE in direct or FRA-assisted contracts let during the pendancy of the investigation, after providing the business in question an opportunity to show cause by written statement to the Administrator why this should not occur.

(d) *Cooperation in investigation*. All parties shall cooperate fully with the investigation. Failure or refusal to furnish relevant information or other failure to cooperate is a violation of this part.

(e) *Determinations*. The Administrator will make one of the following determinations and so inform the business in writing of the reasons for the determination:

(1) The business is considered to be an MBE within the meaning of this part; or

(2) The business is not considered to be an MBE within the meaning of this part and is denied eligibility to participate as an MBE in any direct or FRA-assisted contract until a further determination is made by FRA that the business is an MBE within the meaning of this part.

[44 FR 36339, June 21, 1979]

§ 265.15 Implementation and maintenance of affirmative action program.

The affirmative action program with respect to employment and procurement practices shall set forth in detail applicant's recipient's or contractor's program to implement and maintain its recommended action program to insure that persons and businesses are not discriminated against because of race, color, national origin or sex, and that minorities and MBEs have equal employment and contractual opportunities with applicant, recipient or contractor. In developing its maintenance program for employment, applicants, recipients and contractors shall follow the applicable regulations of the Department of Labor implementing Executive Order 11246 at 41 CFR 60–2, subpart C, which provisions may also be helpful in implementing and maintaining applicant's recipient's or contractor's procurement program.

§ 265.17 Review of affirmative action program.

(a) Except as provided for contractors and subcontractors in § 265.11(b), each affirmative action program to be acceptable must have the written approval of the Administrator.

(b) The Administrator recognizes that there may be some exceptional situations where the requirements of § 265.13 through § 265.15 may not fulfill the affirmative action objectives sought or that those objectives may be better achieved through modified or different requirements. Accordingly, the applicant, recipient or contractor may request approval for modified or different requirements that embody the objectives of §§ 265.13 through 265.15. Such a request must include detailed showings that the particular situation is exceptional and that the modified or different proposals substantially comply with the objectives of this part. If the Administrator determines that the requirements for a detailed justification have been met, he

may waive or modify these requirements or impose different requirements as he deems necessary to further the objectives sought herein.

Subpart C—Compliance

§ 265.19 Compliance information.

(a) Each recipient and contractor shall keep such records and submit to the Administrator complete and accurate reports, at such times, and in such form, and containing such information as the Administrator may determine to be necessary to enable him to ascertain whether the recipient or contractor has complied or is complying with this part. These records shall show in connection with the project, program or activity funded in whole or in part through financial assistance under the Rail Acts:

(1) Procedures which have been adopted to comply with the policies set forth in this part, including the establishment of a source list of MBEs;

(2) Specific efforts to identify and award contracts to MBEs; and

(3) Awards to MBEs on the source list required in paragraph (a)(1) of this section.

(b) Each recipient and contractor shall permit access by the Administrator during normal business hours to such of its books, records, accounts and other sources of information and its facilities as may in the opinion of the Administrator be necessary to ascertain compliance with this part.

(c) Each recipient and contractor shall make available to participants, beneficiaries and other interested persons, such information regarding the provisions of this part and the applicability to the program, project or activity under which the recipient received financial assistance from the Rail Acts or under which the contractor is awarded a contract and make such information available to them in such manner as the Administrator finds necessary to apprise such persons of the protections against discrimination assured them by the Act and this part.

§ 265.21 Conduct of investigations.

(a) The Administrator shall from time to time review the practices of recipients and contractors to determine whether they are complying with this part. The Administrator shall to the fullest extent practicable seek the cooperation of recipients and contractors in obtaining compliance with this part and shall provide assistance and guidance to recipients and contractors to help them comply voluntarily with this part. As required by § 265.7(a)(6) of this part recipients and contractors shall from time to time review the practices of their contractors and subcontractors to determine whether they are complying with this part.

(b) Any person who believes himself or herself or any other person to be subjected to discrimination prohibited by this part, may file with the Administrator a written complaint. A complaint must be filed not later than sixty (60) days after the date complainant discovers the alleged discrimination, unless the time for filing is extended by the Administrator.

(c) The Administrator will make a prompt investigation in cases where a compliance review, report, complaint or other information indicates a possible failure to comply with this part.

(d)(1) If an investigation pursuant to paragraph (c) of this section indicates a failure to comply with this part, the Administrator shall within ten (10) days after such determination so inform the recipient or contractor in writing of the specific grounds for alleging noncompliance and the matter shall be resolved by informal means whenever possible. The notice shall provide that, if it has been determined that the matter is not resolved by informal means within thirty (30) days after the delivery of the notice, action will be taken as provided for in § 265.23.

(2) If an investigation does not warrant action pursuant to paragraph (d)(1) of this section, the Administrator shall within ten (10) days after such determination so inform the recipient, or contractor and the complainant, if any, in writing.

(e) No recipient, contractor or other person shall intimidate, threaten, coerce or discriminate against any individual for the purpose of interfering with any right or privilege secured by section 905 of the Act or this part, or because he or she made a complaint, testified, assisted or participated in

any manner in an investigation, proceeding or hearing under this part. The identity of complainants shall be kept confidential at their election during the conduct of any investigation, proceeding or hearing under this part. But when such confidentiality is likely to hinder the investigation the complainant will be advised for the purpose of waiving the privilege.

§ 265.23 Procedures for effecting compliance.

(a) Whenever the Administrator determines that any recipient, or contractor has failed to comply with the provisions of this part, or with any Federal civil rights statute, or with any order or regulation issued under such a statute, and such failure has not been resolved by informal means pursuant to § 265.21 of this part, the Administrator shall within ten (10) days after such determination notify such recipient or contractor, and the appropriate labor organization if the matter may appear to affect a person who is covered by a collective bargaining agreement, in writing of the specific grounds for alleging noncompliance, and the right of such persons to respond to such determination in writing or to request an informal hearing. Where the Administrator determines that substantial noncompliance exists and it is unlikely that compliance will be obtained, or that lack of good faithexists, or that other good cause exists, he may order that further financial assistance be suspended in whole or in part pending a final decision in the matter. Subject to the provisions of paragraphs (b) through (e) of this section, the recipient or contractor shall have sixty (60) days from the date of delivery of the notice within which to comply. The recipient or contractor may be entitled to additional time if it is demonstrated that compliance is not possible within the sixty day period and that the necessary initial curative actions were undertaken promptly and have been diligently prosecuted toward completion. The Administrator shall specify the last day upon which curative action must be completed to his satisfaction. Unless the Administrator determines that compliance cannot be reasonably attained, failure to take curative action shall be grounds for the Administrator to:

(1) Direct that no further Federal financial assistance be provided to the recipient;

(2) Refer the matter to the Attorney General with a recommendation that an appropriate civil action be instituted;

(3) Exercise the powers and functions provided by title VI of the Civil Rights Act of 1964 (42 U.S.C. 2000d *et seq.);* or

(4) Take such other actions as may be provided by law or this part.

(b) Persons receiving notification and a directive pursuant to paragraph (a) of this section may within thirty (30) days after receipt respond to the notice in writing in lieu of requesting an informal hearing as specified in paragraph (c) of this section. The Administrator will make a determination as to compliance within thirty (30) days after receipt of such written response, and advise the person in writing of his determination. If the Administrator determines that compliance is reasonably attainable and that such person has failed to comply with the provisions of this part or with his determination within 30 days after receipt of his determination, the Administrator shall pursue the remedies set forth in the last sentence of paragraph (a) of this section.

(c) Persons receiving notification and a directive pursuant to paragraph (a) of this section may within ten (10) days after receipt request an informal hearing in lieu of filing a written response as specified in paragraph (b) of this section. The Administrator may, in his discretion, grant a request for an informal hearing for the purpose of inquiring into the status of compliance of such person. The Administrator will advise persons subject to his directive in writing as to the time and place of the informal hearings and may direct such persons to bring specific documents and records, or furnish other relevant information concerning their compliance status. When so requested, such person shall attend and bring the requested information. The time and place so fixed shall be reasonable and shall be subject to change for cause.

The complainant, if any, shall be advised of the time and place of the hearing. The failure of such person to request a hearing or to appear at a hearing for which a date has been set shall be deemed to be a consent to the applicability of the procedures set forth in paragraph (a) of this section.

(d) The hearing shall be conducted by a hearing officer appointed by the Administrator. Such hearings shall commence within twenty (20) days from the date the hearing is granted and shall be concluded no later than thirty (30) days from the commencement date. Parties to informal hearings may be represented by counsel or other authorized representative and shall have a fair opportunity to present any relevant material. Formal rules of evidence will not apply to such proceedings.

(e) *Decisions and notices.* (1) Within ten (10) days after the conclusion of such hearings, the hearing officer will advise the Administrator, in writing, of his views and recommendations as to compliance with this part and a copy of such decision shall be sent by registered mail, return receipt requested, to the recipient or contractor and participating labor organization. If the hearing officer in his decision determines that the recipient or contractor is in noncompliance with this part, he may, if he determines that it is unlikely that compliance will be obtained, or that a lack of good faith exists, or for other good cause, order that further financial assistance be suspended in whole or in part, pending a decision by the Administrator in the matter.

(2) The recipient, contractor or labor organization may file exceptions to the hearing officer's decision, with his reasons therefor, with the Administrator within thirty (30) days of receipt of the initial decision. Within twenty (20) days, after the time for filing exceptions, the Administrator shall determine, in writing, whether or not the parties involved are in compliance with this part. A copy of the Administrator's decision will be given to the recipient, contractor, labor organization, if appropriate, and to the complainant, if any.

(3) If the Administrator determines that compliance can reasonably be attained, his decision shall provide that if such person fails or refuses to comply with the decision of the Administrator within thirty (30) days after receipt of the decision, the Administrator shall:

(i) Direct that no further Federal assistance be provided to such a person;

(ii) Refer the matter to the Attorney General with a recommendation that an appropriate civil action be instituted;

(iii) Exercise the powers and functions provided by title VI of the Civil Rights Act of 1964; and/or

(iv) Take such other actions as may be provided by law or this part.

(4) A recipient or contractor adversely affected by a decision of the Administrator issued under paragraph (a) or (b) of this section shall be restored to full eligibility to receive Federal assistance or award of a federally assisted contract if the recipient or contractor takes complete curative action to eliminate the noncompliance with this part and if the recipient or contractor provides reasonable assurance that the recipient or contractor will fully comply with this part.

§ 265.25 Other information.

(a) Each person required to submit a written affirmative action program pursuant to this part shall include as an appendix thereto, the following information except to the extent such information is already provided as part of the application for financial assistance;

(1) A brief description of other pending applications to other federal agencies for financial assistance, and of federal assistance being provided at the time of submission of the affirmative action program;

(2) A statement of any civil rights compliance reviews regarding applicant or recipient conducted in the two year period before the application, or affirmative action program; the name of the agency or organization performing the review, and the findings of the review;

(3) Where the project, program or activity receiving financial assistance will require the relocation of persons and businesses, a description of the requirements and steps used or proposed

to guard against unnecessary impact on persons on the basis of race, color, or national origin;

(4) Where the project, program or activity receiving financial assistance will result in the construction of new facilities or expansion of existing facilities, a description of the requirements and steps used or proposed to guard against unnecessary impact on persons on the basis of race, color or national origin;

(5) Where paragraphs (a) (3) and (4) of this section are applicable, additional data such as demographic maps, racial composition of affected neighborhoods, or census data should be provided where necessary or appropriate to evaluate the impact of projects, programs and activities referred to in paragraphs (a) (3) and (4) of this section.

APPENDIX A TO PART 265

The following are the financial assistance programs to which this part applies:

(a) *Railroad Revitalization and Regulatory Reform Act of 1976*, (1) purchase of redeemable preference shares or trustee certificates pursuant to section 505;

(2) Guarantee of obligations, the proceeds of which will be used to acquire, or rehabilitate or improve rail facilities, or equipment, pursuant to section 511; and

(3) Grants and contracts made to implement the Northeast Corridor project under section 704.

(b) *Regional Rail Reorganization Act of 1973, as amended*, (1) loans made by the United States Railway Association (USRA) pursuant to section 211;

(2) Purchase of securities of the Consolidated Rail Corporation pursuant to section 216; and

(3) Grants to States, or local or regional authorities for rail continuation assistance under section 402.

(c) *Department of Transportation Act*, (1) grants to States for rail freight assistance programs under section 5 (sec. 803 of the Railroad Revitalization and Regulatory Reform Act of 1976); and

(2) Grants under section 4(i) for the planning, preservation and conversion of rail passenger terminals of historical or architectural significance.

(d) *Rail Passenger Service Act*, (1) grants to Amtrak under section 601.

PART 266—ASSISTANCE TO STATES FOR LOCAL RAIL SERVICE UNDER SECTION 5 OF THE DEPARTMENT OF TRANSPORTATION ACT

Sec.

266.1 Definitions.
266.3 Rail Service Assistance Program.
266.5 State eligibility.
266.7 Project eligibility.
266.9 Federal/State share.
266.11 Allowable costs.
266.13 Distribution of funds.
266.15 Requirements for State Rail Plan.
266.17 Applications.
266.19 Environmental impact.
266.21 Grant agreement and disbursement.
266.23 Record, audit, and examination.
266.25 Waivers and modifications.

AUTHORITY: Sec. 5 of the Department of Transportation Act (49 U.S.C. 1654), as amended by the Local Rail Service Assistance Act of 1978, Pub. L. 95–607, 92 Stat. 3059.

SOURCE: 44 FR 51129, Aug. 30, 1979, unless otherwise noted.

§ 266.1 Definitions.

As used in this part:

Acquisition assistance means funds granted to a State under section 5(f)(2) of the Department of Transportation Act (49 U.S.C. 1654(f)(2)) to cover the cost of acquiring by purchase, lease, or in such other manner as the State considers appropriate, a line of railroad or other rail properties, or any interest therein for existing or future rail freight service.

Act means the Department of Transportation Act (49 U.S.C. 1650 *et seq.*).

Administrator means the Administrator of the Federal Railroad Administration or the Administrator's delegate.

Cash means an outlay of funds.

Commission means the Interstate Commerce Commission or any successor Federal agency to the relevant activity.

Common carrier means a person providing railroad transportation for compensation who is subject to the jurisdiction of the Commission under subchapter I of chapter 105 of title 49 of the U.S.C.

Designated State Agency means the State agency designated under section 5(j)(2) of the Act (49 U.S.C. 1654(j)(2)).

Entitlement means the amount of assistance which a State is eligible to receive annually under section 5(h) of the Act (49 U.S.C. 1654(h)).

Equipment means rolling stock of the kind generally used by American railroads in revenue freight service.

Facilities means track, ties, roadbed and related structures including terminals, team tracks and appurtenances, bridges and tunnels, and other structures used or usable for rail service operations.

FRA means the Federal Railroad Administration.

Federal Share means the contribution by the Administrator under section 5(g) of the Act (49 U.S.C. 1654(g)) to a State's rail service assistance program.

Final System Plan means the plan approved by the Congress under section 208 of the Regional Rail Reorganization Act of 1973 (45 U.S.C. 718).

Gross ton miles per mile means the combined weight of locomotives and all trailing cars and their contents used in revenue freight trains multiplied by the number of route miles traveled and divided by the number of route miles of the line.

Line means a line of railroad.

Maintenance means inspection and light repairs, emergency repairs and a planned program of periodic maintenance which is necessary to keep a line at its existing condition or to comply with FRA Class 1 Safety Standards.

Planning assistance means funds granted to a State under section 5(i) of the Act (49 U.S.C. 1654(i)) to meet the cost of establishing (including developing a planning application), implementing, revising, and updating the State Rail Plan required by section 5(j) of the Act (49 U.S.C. 1654(j)).

Planning Work Program means that portion of a State's planning application which outlines the State's plan for establishing, implementing, revising, or updating a State Rail Plan which meets the requirements of section 5(i) of the Act, (49 U.S.C. 1654(i)).

Program operation assistance means funds granted to a State to cover those administrative costs allowable under Federal Management Circular 74–4.

Rail Act means the Regional Rail Reorganization Act of 1973 (45 U.S.C. 701 *et seq.*).

Rail banking means the acquisition of an interest in a rail right-of-way sufficient to ensure its preservation for future rail freight service.

Rail facility construction assistance means funds granted to a State under section 5(f)(5) of the Act (49 U.S.C. 1654(f)(5)) to cover the cost of constructing rail or rail related facilities (including new connections between two or more existing lines, intermodal freight terminals, sidings, and relocation of existing lines) for the purpose of improving the quality and efficiency of rail freight service.

Rail service continuation assistance means funds granted to a State under section 5(f)(1) of the Act (49 U.S.C. 1654(f)(1)) to cover rail service continuation payments for the difference between the revenue attributable to a line of railroad and the avoidable costs of providing rail service on that line, together with a reasonable return on the value of the line and other rail properties related to that line, all as determined in accordance with 49 CFR part 1121 with the following exceptions:

(1) Where service was eligible to be subsidized under section 402(c)(2) (A) and (B) of the Rail Act, rail service continuation assistance means funds for payments determined in accordance with 49 CFR part 1125; and

(2) Where service was eligible to be subsidized under section 402(c)(2)(C) of the Rail Act, rail service continuation assistance means funds for payments calculated, to the greatest extent possible, in a manner consistent with 49 CFR part 1121.

Rehabilitation or improvement assistance means funds granted to a State under section 5(f)(3) of the Act (49 U.S.C. 1654(f)(3)) to cover the cost of replacing or upgrading, to the extent necessary to permit adequate and efficient rail freight service, facilities needed to provide service on a line.

Relocation costs means actual expenses directly incurred in moving shippers from a line to a new location.

State means any State or the District of Columbia in which a common carrier maintains any line.

State Rail Plan means the current plan, including all updates, revisions, and amendments required by section 5(j)(1) of the Act (49 U.S.C. 1654(j)(1)).

Substitute service assistance means funds granted to a State under section 5(f)(4) of the Act (49 U.S.C. 1654(f)(4)) to cover the cost of reducing the costs of lost rail service in a manner less expensive than continuing rail service and includes (but is not limited to) the acquisition, construction, or improvement of facilities for the provision of substitute freight transportation services and relocation costs.

§ 266.3 Rail Service Assistance Program.

(a) *Scope of the program.* The Rail Service Assistance Program includes:

(1) Rail service continuation assistance;

(2) Acquisition assistance;

(3) Rehabilitation or improvement assistance;

(4) Substitute service assistance;

(5) Rail facility construction assistance;

(6) Planning assistance; and

(7) Program operations assistance.

(b) *Special limitations on planning assistance and program operation assistance.* (1) A State is eligible to receive up to $100,000, or 5 percent of its entitlement, whichever is greater, as planning assistance; and

(2) A State is eligible to receive up to 5 percent of the total amount of funds granted to it each fiscal year under paragraphs (a)(1) to (5) of this section as program operation assistance.

§ 266.5 State eligibility.

(a) *General eligibility requirements under the rail service assistance program.* A State is eligible for assistance if:

(1) The State has certified pursuant to section 5(j)(4) of the Act that it has or will adopt and maintain adequate procedures for financial control, accounting and performance evaluation in order to assure proper use of Federal funds;

(2) For purpose of establishing a State Rail Plan, the State has submitted, in accordance with § 266.17(e) of this part, a planning application; and

(3) For any other assistance,

(i) The State has established an adequate plan for rail services in the State which (A) meets the requirements of § 266.15 of this part; (B) is part of an overall planning process for all transportation services in the State; (C) includes a suitable procedure for updating, revising, and amending such plan; and (D) as updated, revised, or amended has been approved by the Administrator;

(ii) Such State Rail Plan (A) is administered or coordinated by a designated State agency; (B) provides for the equitable distribution of resources; and (C) includes a methodology for determining the ratio of benefits to costs of projects for which acquisition assistance, rehabilitation or improvement assistance, substitute service assistance, and rail facility construction assistance is sought;

(iii) The State agency:

(A) Has authority and administrative jurisdiction to develop, promote, supervise, and support safe, adequate, and efficient rail transportation services;

(B) Employs or will employ, directly or indirectly, sufficient trained and qualified personnel;

(C) Maintains or will maintain adequate programs of investigation, research, promotion, and development with provision for public participation; and

(D) Is designated and directed solely or in cooperation with other State agencies to take all practicable steps to improve transportation safety and to reduce transportation-related energy utilization and pollution; and

(iv) The State undertakes to immediately notify the Administrator of any changes in conditions which might affect its compliance with this section.

§ 266.7 Project eligibility.

(a) *Rail service continuation assistance, acquisition assistance and substitute service assistance.* A project is eligible for assistance under § 266.3(a) (1), (2), and (4) of this part, respectively, if:

(1) The Commission pursuant to 49 U.S.C. 10903 has found since February 5, 1976, that the public convenience and necessity permit the abandonment and discontinuance of rail service on the line related to the project, except that any such line or related project eligible prior to October 1, 1978, is eligible only until September 30, 1981 and any such

line eligible for rail service continuation assistance shall receive such assistance for no more than 36 months after October 1, 1978;

(2) The line related to the project was eligible for assistance under section 402 of the Rail Act (45 U.S.C. 762), except that any such line or related project is eligible only until September 30, 1981; or

(3) For purposes of acquisition assistance, the line related to the project is listed for possible inclusion in a rail bank in Part III, Section C of the Final System Plan.

(b) *Rehabilitation and improvement assistance and rail facility construction assistance.* A project is eligible for assistance under §266.3(a) (3) and (5) of this part, respectively, if:

(1)(i) The Commission has not made a finding that the public convenience and necessity would require or permit abandonment or discontinuance of rail service on the line related to the project;

(ii) Any pending application for a certificate of abandonment or discontinuance of rail service on the line related to the project is withdrawn within a reasonable period (as determined by the Administrator) following the execution of the grant agreement and before Federal funds are disbursed for the project; and

(iii)(A) The line related to the project is certified by the railroad as having carried three million gross ton miles per mile or less during the prior year; or

(B) The line related to the project is certified by the railroad in a written statement which identifies the name of the line, the State or States in which it is located, its length, termini, and termini mile posts as having carried between three and five million gross ton miles per mile during the prior year, and the Administrator has determined that the project is consistent with proposals made under the authority of subsections 5 (a) through (e) of the Act (49 U.S.C. 1654 (a)–(e));

(2)(i) An application for a certificate of abandonment or discontinuance of rail service on the line related to the project has been filed with the Commission during the period February 5, 1976 through December 31, 1978, whether or not such application has been granted; or

(ii) During the period February 5, 1976, through December 31, 1978, the Commission has found that the public convenience and necessity would require or permit abandonment or discontinuance of rail service on the line related to the project irrespective of when the application was filed;

(3) The line related to the project is listed for possible inclusion in a rail bank in Part III, Section C of the Final System Plan; or

(4) The line related to the project was eligible to be acquired under section 402(c)(3) of the Rail Act (45 U.S.C. 762(c)(3)).

(c) Projects eligible under paragraphs (b)(2), (b)(3), and (b)(4), of this section are eligible only until September 30, 1981. Projects initially eligible under paragraph (b)(2) of this section, may subsequently become eligible under paragraph (b)(1) of this section, if the Commission issues a new certificate of public convenience and necessity with respect to the line related to the project.

§266.9 Federal/State share.

(a) *Federal share.* The Federal share of allowable costs under the Rail Service Assistance Program is 80 percent, with the exception that the Federal share of payments to be covered by rail service continuation assistance shall be 70 percent for any third twelve month period which begins on or after October 1, 1980 that such assistance is provided.

(b) *State share-general.* The State share of allowable costs under the Rail Service Assistance Program shall be provided either in cash or through eligible in-kind benefits which would not otherwise have been provided. When more than the required State share is provided during the Federal fiscal year beginning October 1, 1978, or thereafter, the amount in excess of the required State share may be carried forward to subsequent fiscal years. The State share of allowable costs under the Rail Service Assistance Program may not be satisfied directly or indirectly by any Federal funds unless the funds are provided through a Federal program which specifically authorizes the use of

such funds to satisfy the non-Federal share of a Federally subsidized program.

(c) *In-kind benefits*—(1) *Eligible types of benefits and their valuation.* The following types of in-kind benefits are eligible when they are provided for projects eligible under § 266.7 of this part (whether or not Federal assistance is requested for the projects) or they are activities which would be eligible for planning and program operation assistance. Eligible in-kind benefits are valued as follows:

(i) The value of forgiven taxes, such as those portions of gross receipts or revenue taxes which are applicable to an approved project or property taxes on project related property, shall be the amount which would otherwise have been levied by the taxing authority. Forgiveness may be through exemption or remission;

(ii) The value of trackage rights secured by a State for a common carrier shall be the amount paid by railroads for comparable rights on comparable rail freight properties;

(iii) The value of State salaries for State public employees working in the State Rail Service Assistance Program, shall be consistent with rates paid for similar work by state public employees working in comparable state programs but shall not include overhead or general administrative costs;

(iv) The value of donations by the State or by a third party on behalf of the State of real property or tangible personal property of the kind necessary for safe and efficient operation of rail freight service, such as State or locally owned or leased buildings used in rail freight operations or equipment or materials, shall be determined as follows:

(A) The value of State tangible personal property shall be established at the State's actual cost in accordance with Federal Management Circular 74–4;

(B) The value of donated tangible personal property shall be determined in accordance with Attachment F of Office of Management and Budget Circular (OMB) A–102;

(C) The value of State real property shall be established at the State's actual cost in accordance with Federal Management Circular 74–4, if at least one independent appraisal based on the results of a title search was performed when the property was purchased by the State, otherwise it shall be valued at the fair market value as established by at least one independent appraisal based on the results of a title search at the time the state proposes to make the property available as in-kind benefit; and

(D) The value of donated real property shall be its fair market value, at the time of donation to the State, as established by at least one independent appraisal based on the results of a title search;

(2) *Eligibility criteria.* To be applied toward the State share, in-kind benefits must:

(i) Be verifiable from the State's records;

(ii) Be necessary and reasonable for proper and efficient accomplishment of the objectives of the Rail Service Assistance Program;

(iii) Be provided for in the approved grant budget; and

(iv) Be approved under paragraph (3) of this paragraph (c).

(v) The State shall submit such information as the Administrator may request to verify the value of in-kind benefits.

(3) *Request for approval.* A request for approval of the in-kind benefits are to be applied and shall include the following:

(i) Full name and principal business address of the contributor if other than grantee;

(ii) Detailed documentation of the in-kind benefits including identification of the kind of in-kind benefits to be provided as well as their estimated value. When in-kind benefits are to be provided by a third party, a copy of the executed agreement between the State and the third party; and

(iii) Certification by the State that the contribution will be used solely for the purposes documented.

§ 266.11 Allowable costs.

Allowable costs include only the following costs which are properly allocable to the work performed: Planning and program operation costs which are allowed under Federal Management

Circular 74–4; and costs of projects eligible under § 266.7 of this part. All allowable costs shall be authorized by a fully executed grant agreement. A State may incur costs prior to the execution of a grant agreement only if the Administrator, based on the State's demonstration of a compelling need to incur costs prior to the execution of a grant agreement, has authorized the costs in writing prior to their incurrence by the State.

§ 266.13 Distribution of funds.

(a) *Formula.* Funds appropriated for or reallocated in any fiscal year (in this section refered to jointly as ''funds'') are to be distributed to each State as follows:

(1) Two-thirds of the funds will be allocated in the ratio which a State's rail mileage that, in accordance with 49 U.S.C. 10904(d), is either potentially subject to abandonment or is to become the subject of an application for a certificate of abandonment or discontinuance which a carrier plans to submit, but has not yet submitted, bears to the total such rail mileage in all the States;

(2) One-third of the funds will be allocated in the ratio which a State's rail mileage for which the Commission has found within three years prior to the first day of the fiscal year for which the funds are being allocated that the public convenience and necessity permits the abandonment, or the discontinuance, of rail service on such rail mileage, bears to the total such rail mileage in all the States. Until September 30, 1981, such rail mileage includes the rail mileage which was eligible under the Rail Service Assistance Program pursuant to section 402 of the Rail Act, and all rail mileage which, prior to October 1, 1978, had been included for formula allocation purposes. The Administrator will calculate rail mileage under this paragraph as of October 1 of each year; and

(3) The above calculations will be adjusted if necessary so that no State receives less than 1 percent of the funds appropriated for a fiscal year.

(b) *Reallocation.* The Administrator will reallocate among the States funds which have not been granted under an executed grant agreement by the end of the fiscal year for which the funds were appropriated and funds determined by a Federal audit to be in excess of allowable costs when they have not been granted under an executed grant agreement by the end of the fiscal year in which the Federal audit is made. Reallocated funds are distributed in accordance with the allocation formula described in paragraph (a) of this section.

(c) *Interstate sharing of allocated funds.* Where not in violation of State law, two or more States, which are eligible to receive assistance under the Rail Service Assistance Program pursuant to § 266.5 of this part may combine any portion of their entitlements for purposes of conducting any eligible project of mutual benefit provided that they enter into an agreement for this purpose.

§ 266.15 Requirements for State Rail Plan.

(a) *State planning process.* The State Rail Plan shall be based on a comprehensive, coordinated and continuing planning process for all transportation services within the State and shall be developed with an opportunity for participation by persons interested in rail activity in the State and adjacent States where appropriate. At a minimum, the State shall hold a public hearing if, on the basis of reasonable public notice appearing in the press, there is sufficient public interest to justify a hearing. Public notice shall be given, in accordance with applicable State law and practice concerning comparable matters, that a draft of the State Rail Plan is available for public inspection at a reasonable time in advance of the hearing. The State shall enable local and regional governmental bodies to review and comment on appropriate elements of the State Rail Plan. Provisions shall also be made for updating, revising, and amending the State Rail Plan.

(b) *Format of the State Rail Plan.* Each item submitted in response to a requirement of this section shall reference that requirement by subsection, paragraph, and subparagraph.

(c) *Contents of the State Rail Plan.* Each State Rail Plan shall:

(1) Specify the objectives of the State's Rail Service Assistance Program and explain how the implementation of the State Rail Plan will accomplish these objectives and explain relevant data sources, assumptions, analytical methodology, other legal constraints and special problems or conditions which will aid the public in understanding the State Rail Plan;

(2) Contain an illustration of the State's entire rail system on suitable scale maps of the State highway system (such as a reduction of the County Highway Planning Series of maps), designating with respect to each line listed under subparagraph (3) of this subsection, including all lines connecting to them:

(i) The operating carrier or carriers;

(ii) Freight traffic density, and

(iii) Location of passenger service.

These maps shall be accompanied by a written description of the service provided on each line;

(3) Identify the following classes of rail service within the State:

(i) Lines in the State which are eligible for assistance under § 266.7 of this part other than those included in paragraph (c)(3)(ii) of this section;

(ii) Lines in the State which a common carrier has identified on its system diagram map submitted under 49 CFR 1121.20(b) (1) and (2) as potentially subject to abandonment and lines which are anticipated to be the subject of an abandonment or discontinuance application within three years following the date of submission;

(iii) [Reserved]

(iv) Lines in the State for which abandonment or discontinuance applications are pending;

(v) Lines in the State which are involved in the following kinds of proposals that have been submitted to the Commission for approval or are in the process of negotiation, to the extent that this information is publicly available:

(A) Mergers;

(B) Consolidations;

(C) Reorganizations;

(D) Purchases by other common carriers; or

(E) Other unification and coordination projects.

(vi) Rail projects for which the State plans to request Federal assistance or approval as in-kind benefits; and

(vii) Rail projects for which a State provides or plans to provide assistance from sources other than the Rail Service Assistance Program, including the estimated cost of the projects;

(4) Establish and describe screening criteria to be used in selecting the eligible lines which the State analyzes in detail, identify these lines, and explain how the application of the screening criteria resulted in their selection;

(5) Describe the State's methodology for determining the ratio of benefits to the costs of proposed projects eligible under § 266.7 of this part (except projects to be funded with rail service continuation assistance);

(6) Include, to the extent that the information is available to the State, the following data for each line the State has selected to analyze in detail:

(i) Annual freight tonnage and carloads segregated by commodity type and indicating any seasonal traffic fluctuations and the number of shippers and receivers on the line aggregated by type (e.g., grain elevator, power plant, heavy manufacturing), including identification of information which a shipper wishes the Administrator to consider confidential to the extent permitted by law;

(ii) Revenues and costs of providing rail freight service on the line;

(iii) Condition of the related rail facilities and equipment, and for a line eligible under § 266.7(b) of this part, a description of the particular rail facilities involved in any project a State may be considering on the line;

(iv) When the State is considering a line for rail service continuation assistance, projections of freight traffic needs on the line for at least the three succeeding calendar years and estimates of the amount and type of equipment, the condition of the rail facilities, and the level of service necessary to satisfy the projected traffic needs as well as estimates of the revenue and costs of providing this service; and

(v) When the State is considering a project eligible under § 266.7(b) of this part, the amount of funds expended for the maintenance of the line and the kinds of work performed during the

five year period preceding its eligibility.

(vi) When the State is considering a line for rail banking, a description of the line's future economic potential, such as the existence of fossil fuel reserves or agricultural production likely to be served;

(7) Describe the alternatives which the State will analyze in applying the methodology described in paragraph (c)(5) of this section, such as: Rail service continuation payments, rehabilitation or improvement, acquisition, rail facility construction, potential for moving freight by alternate modes, or abandonment or discontinuance of rail freight service;

(8) Apply the methodology described in paragraph (c)(5) of this section to each line the State has selected to analyze in detail;

(9) Specify the State's decision regarding the alternative selected for each line the State has analyzed in detail and include the following:

(i) An indication of whether Federal assistance will be requested or other funds will be used to implement the alternative selected;

(ii) An identification of lines which may be affected by the alternative selected;

(iii) An explanation of how the alternative selected contributes to the accomplishment of the State's objectives as stated in paragraph (c)(1) of this section; and

(iv) A statement of the projected future of the line after the alternative selected is implemented and the line is no longer eligible for rail service continuation assistance under § 266.7(a) of this part or after the payback period used in the State's benefit-cost analysis, whichever is appropriate;

(10) Describe the planning process participation of local and regional governmental bodies, the railroads, railroad labor, rail service users, and the public in general;

(11) Describe the overall planning process for all transportation services in the State; and

(11A) Indicate how the overall planning process in the State addresses the need to improve national energy efficiency, reduce the national use of petroleum and natural gas, and increase the national use of coal.

(12) Include a program of projects which identifies the projects for which the State expects to submit applications and the anticipated submission date. The program shall group the proposed projects in the order they comply with the State's criteria and goals for assistance, and shall:

(i) Identify the type of project (i.e., rail service continuation payments, acquisition, rehabilitation or improvement, rail facility construction, or substitute service), its location, and duration; and

(ii) Include the anticipated amount of funds to be requested for each project:

(d) *Updates, revisions, and amendments of the State Rail Plan*—(1) *General.* As provided for in paragraph (e) of this section, State Rail Plans shall be updated at least on an annual basis but may be revised more frequently at the discretion of the State in accordance with its program needs. Such updates shall be subject to the same review, public participation and approval procedures by the State and FRA as the original State Rail Plan.

(2) *Contents.* Annual updates shall include the following:

(i) A response to unanswered FRA comments on previously submitted updates, revisions, amendments, or the original State Rail Plan;

(ii) An update of information in previous submittals which is no longer accurate as a result of plan implementation, action by a governmental entity or railroad, or changed conditions;

(iii) For lines receiving rail service continuation assistance, inclusion of revenue and cost information from the past year's operating experience and a reevaluation of service based on these new data;

(iv) Updating of the maps and descriptions required under paragraph (c)(2) of this section;

(v) Analysis of any new projects developed by the State in accordance with paragraphs (c)(4), (5) and (6) of this section;

(vi) Changes in agency responsibilities and authority including ability to provide the non-Federal share; and

(vii) Revisions in the State's policies, objectives or long-range expectations.

(e) *Adoption and submission of State Rail Plan and annual updates*. An original and five copies of the State Rail Plan, and any amendments, revisions, or updates shall be submitted to FRA for review and approval with a certification by the Governor, or by the Governor's delegate, that the submission constitutes the State Rail Plan established by the State as provided in section 5(j) of the Act. The State Rail plan, and all amendments, revisions, and updates shall be submitted to the FRA through the appropriate Federal Highway Division Office. A current list of mailing addresses of the above offices will be provided by FRA to each State.

(f) *Review of the State Rail Plan and Updates*. The State Rail Plan and all amendments, revisions, and updates shall analyze in accordance with this section all projects for which the State anticipates requesting rail service assistance, other than planning assistance, during the fiscal year. In accordance with § 266.17(b) of this part, a project for which funds are requested must have been addressed in a previously approved State Rail Plan or update. If the Administrator determines that the State Rail Plan or update is not in accordance with this part, the Administrator will notify the State in writing setting forth the Administrator's reasons for such a determination.

[44 FR 51129, Aug. 30, 1979, as amended at 45 FR 58038, Aug. 29, 1980; 48 FR 29274, June 24, 1983]

§ 266.17 Applications.

(a) *General*. (1) Applications for planning assistance shall comply with paragraphs (b), (c) and (e) of this section.

(2) Applications for rail service continuation assistance shall comply with paragraphs (b), (c), (d) and (f) of this section.

(3) Applications for acquisition assistance shall comply with paragraphs (b), (c), (d) and (g) of this section.

(4) Applications for rehabilitation or improvement assistance and rail facility construction assistance shall comply with paragraphs (b), (c), (d) and (h) of this section.

(5) Applications for substitute service assistance shall comply with paragraphs (b), (c), (d) and (i) of this section.

(b) *Submission*. (1) Applications shall be submitted by the designated State agency using the standard forms contained in Attachment M of Office of Management and Budget Circular No. A–102 (''OMB Circular A–102''). Each item submitted in response to a requirement of this section shall reference that requirement by subsection, paragraph, and subparagraph. Each application shall be consistent with the current State Rail Plan and analyzed in it.

(2) A State may apply for planning assistance to cover prospective costs at any time during the planning process.

(3) Exhibits previously filed with the Administrator need not be refiled unless the prior filing has been rendered obsolete by changed circumstances. Such prior filing shall be appropriately referenced by source, location of data and date of submittal.

(c) *Contents*. Each application shall include:

(1) Full name and principal business address of the applicant;

(2) Name, title, address and phone number of the person to whom correspondence regarding the application should be addressed;

(3) Budget estimates for the total amount of assistance required for projects or planning;

(4) Applicant's proposed means of furnishing its share of the total costs of the projects, as well as copies of executed agreements between the agency and any third party which may be providing the non-Federal share or a portion thereof;

(5) Assurance by the chief executive officer of the applicant that the Federal funds provided under the Act will be used solely for the purpose for which the assistance will be provided and in conformity with limitations on expenditures under the Act and applicable regulations;

(6) Evidence that the applicant has established in accordance with Attachment G of OMB Circular A–102, adequate procedures for financial control,

accounting and performance evaluation in order to assure proper use of the Federal funds;

(7) Assurance by applicant's chief executive officer that the timing of all advances by the applicant will comply with the Department of Treasury advance financing regulations (31 CFR part 205);

(8) Statement as to whether the applicant prefers to receive disbursement of Federal funds by advance payment or reimbursement;

(9) Opinion of applicant's legal counsel showing that counsel is familiar with the corporate or other organizational powers of the applicant, that the applicant is authorized to make the application, that the applicant is eligible to participate in the Rail Service Assistance Program in accordance with the provisions of the Act and this part, and that the applicant has the requisite authority to carry out actions proposed in the application and to assume the responsibilities and obligations created thereby;

(10) Assurances that the applicant will comply with and that the program will be conducted in accordance with the following Federal laws, policies, regulations and pertinent directives:

(i) Title VI of the Civil Rights Act of 1964, 42 U.S.C. 2000d *et seq.*, and 49 CFR part 21;

(ii) Section 905 of the Railroad Revitalization and Regulatory Reform Act of 1976, 45 U.S.C. 803, and 49 CFR part 265;

(iii) The Rehabilitation Act of 1973, 29 U.S.C. 794 and 49 CFR part 27 (44 FR 31442, May 31, 1979) relating to non-discrimination on the basis of handicap; and

(iv) The State and Local Fiscal Assistance Act of 1972, 31 U.S.C. 1221 *et seq.* and 31 CFR part 51; and

(11) When two or more States desire to combine their entitlements or any portion of them for the purpose of funding a project, certification of the Governor or the Governor's delegate of each State involved that it is a party to an interstate agreement as required under section 5(h)(4) of the Act (49 U.S.C. 1654(h)(4)). Such certification shall include the amount of money to be used from each State's entitlement and which State is to enter into a grant for the project.

(d) *Additional contents.* In addition to meeting the requirements of paragraphs (b) and (c) of this section each application except when planning assistance is requested, shall include evidence that the agency submitting the application has the statutory authority and administrative jurisdiction to develop, promote, supervise and support safe, adequate, and efficient rail services; that it employs or will employ, directly or indirectly, sufficient trained and qualified personnel; that it maintains or will maintain adequate programs of investigation, research, promotion, and development with provision for public participation; and that it is designated and directed solely, or in cooperation with other State agencies, to take all practicable steps to improve transportation safety and to reduce transportation related energy utilization and pollution.

(e) *Planning assistance.* In addition to meeting the requirements of paragraphs (b) and (c) of this section, each application for planning assistance shall include a Planning Work Program which, together with such other information the State may choose to submit, demonstrates to the satisfaction of the Administrator that the State's proposed use of planning assistance will produce a State Rail Plan, or an update, amendment or revision which meets the requirements of § 266.15 of this part. The Planning Work Program shall include the following information:

(1) An explanation of how the State Rail Plan will be related to the overall planning process for transportation within the State. This explanation shall concentrate on the expectations of the State for the future of local rail freight services and consider such factors as likelihood of profitability of existing rail lines, necessity of rail service continuation payments, State acquisition of rail lines, use of alternate modes of transportaion in lieu of rail freight service, and other long-term alternatives;

(2) A description of the methods by which the State will involve local and regional governmental bodies and the public generally in its rail planning

process, including its methods of providing for equitable distribution of resources;

(3) An identification of the data to be obtained on the rail network and rail services in the State, the sources of this data, and the methodology to be employed in the collection of the data;

(4) A description of the method by which the State will develop the State Rail Plan, including a brief description of discrete tasks or activities to be accomplished; and

(5) A list of the individuals responsible for the planning, a work schedule and a budget.

(f) *Rail service continuation assistance.* In addition to meeting the requirements of paragraphs (b), (c), and (d) of this section, each application for rail service continuation assistance shall include the following:

(1) The amount of the estimated rail service continuation payment for each line; and

(2) A description of the arrangements which the applicant has made for operation of the rail services to be subsidized including copies of the proposed operating agreements, leases, or other compensation agreements under which service is to be provided, and the results of the application's preaward audit of proposed operators and equipment leasing companies if the equipment to be used in providing the rail service is to be leased by the proposed operator.

(g) *Acquisition assistance.* In addition to meeting the requirements of paragraphs (b), (c), and (d) of this section, each application for acquisition assistance shall include the following:

(1) Copies of the results of a title search, and the basis for the proposed acquisition price including two independent valuation appraisals by qualified appraisers. Such appraisals shall be performed in accordance with the ''Uniform Appraisal Standards for Federal Land Acquisition'' proposed by the Interagency Land Acquisition Conference and shall be based on the results of a title search and comparable sales and shall take cognizance of all easements, encumbrances and restrictions that may affect the value of the property. Such appraisals shall be reviewed by a State Review appraiser to establish just compensation;

(2) Written assurance that the acquisition is being undertaken in accordance with 49 CFR 25.253, 25.255, 25.257, and 25.259 to the greatest extent practicable under State law and fully in compliance with 49 CFR 25.261(a) and 25.263;

(3) Written assurance that the owner of the property to be acquired has been advised of the requirements of 49 CFR 25.259 or will be advised of such requirements prior to the consummation of the acquisition;

(4) A description of the necessary steps, and timing for completion of the acquisition;

(5) When rail service is to be immediately provided over the line, a description of the arrangements which the applicant has made for operation of the rail service, including copies of the proposed operating agreements, leases, and other compensation agreements under which the service is to be provided, and a description of the means by which the State will continue rail service on the property to be acquired once assistance under the Act is terminated;

(6) For applications regarding rail banking, evidence that the properties for which assistance is requested have potential for rail freight service such as plans for agricultural development or existence of fossil fuel reserves, the State's anticipated timetable for returning the line to service, and its proposed use of the property while it is out of service including its maintenance plans; and

(7) Evidence that the anticipated benefits and costs of the proposed acquisition have been analyzed in accordance with the methodology established by the State under § 266.15(c)(5) of this part.

(h) *Rehabilitation or improvement assistance and rail facility construction assistance.* (1) In addition to meeting the requirements of paragraphs (b), (c), and (d) of this section, each application for rehabilitation or improvement assistance and rail facility construction assistance shall include the following:

(i) A detailed estimate of the materials and labor required to complete the work, the total estimated costs of

the work, the estimated numbers and kinds of ties and other material, the milepost termini involved, and a schedule for completion of the work;

(ii) Evidence that the anticipated benefits and costs of the proposed acquisition have been analyzed in accordance with the methodology established by the State under § 266.15(c)(5) of this part;

(iii) When rehabilitation assistance is requested—

(A) A copy of the document by which funds will be granted or loaned (at an interest rate determined by the State) to the owner of the rail properties or the operator of the rail service related to the project; and

(B) An assurance by the chief executive officer of the applicant that:

(*1*) Repaid loan funds and interest accumulated with respect to such funds will not be loaned or granted without the prior written approval of the Administrator;

(*2*) The Federal share of repaid loan funds will be placed in an interest-bearing account or with the prior written approval of the Administrator will be deposited by the borrower, for the benefit and use of the State, in a bank which has been designated by the Secretary of Treasury in accordance with 12 U.S.C. 265; and

(*3*) If the rehabilitated or improved facilities are not used for rail freight service during the useful life of the improvement the Federal share of the fair market value of the improvement or facility will be placed in an interest-bearing account or with the prior written approval of the Administrator will be deposited by the owner of the rail properties, for the benefit and use of the State, in a bank which has been designated by the Secretary of the Treasury in accordance with 12 U.S.C. 265;

(iv) An assurance by chief executive officer of the applicant that rehabilitated or improved facilities or newly constructed facilities will be maintained to prevent deterioration below the speed at which the line could be operated upon completion of the project during the period of time established as the payback period in the benefit-cost analysis of the project;

(2) In addition to meeting the requirements of paragraphs (b), (c), and (d) and (h)(1) of this section, each application for a project eligible under § 266.7(b)(2)(i) (if the Commission has made a finding granting the application for abandonment and discontinuance) (ii), (3) or (4) shall also include the following:

(i) An indication of which of the following methods will be used to complete the work, including proposed contracts unless the work will be performed under method (A):

(A) On an actual cost basis by the operator or the applicant;

(B) By contracting for the work in accordance with Attachment O to OMB Circular A–102; or

(C) Under an existing continuing contract between the operator and another firm provided that the applicant can demonstrate the costs are comparable to those under paragraph (h)(2)(i) (A) or (B) of this section; and

(ii) A description of the plans for inspection of the work including identification and qualifications of the staff to be responsible for the inspection and a proposed schedule of inspections; and

(iii) A description of the arrangements made for the operation of rail service over the property including copies of the proposed operating agreements, leases or other compensation agreements under which service is to be provided, and the proposed method of financing the operation of such rail service;

(3) In addition to meeting the requirements of paragraphs (b), (c), (d), and (h)(1) of this section, each application for a project eligible under § 266.7 (b)(1) or (2)(i) (if the Commission has not made a finding granting the application for abandonment discontinuance) shall include an assurance by the common carrier which operates service on or owns the line related to the project that if an application for a certificate of abandonment or discontinuance has been filed with the Commission the application will be withdrawn within a reasonable period following execution of a grant agreement and before Federal funds are disbursed for the project; and

(4) When rail facility construction assistance is requested an assurance by

the chief executive officer of the applicant that if the facility is abandoned, sold, or converted to non-rail freight use during its useful life, FRA will be compensated an amount computed by applying FRA's participation in the cost of constructing the facility to the fair market value of the facility at the time it is abandoned, sold, or converted to non-rail use.

(i) *Substitute service assistance.* In addition to meeting the requirements of paragraphs (b), (c), and (d) of this section, each application for substitute service assistance shall include:

(1) A detailed description of the substitute service project, including evidence that the cost and scope of the project are limited to that necessary to replace the rail service being discontinued;

(2) Evidence that the anticipated benefits and costs of the proposed acquistion have been analyzed in accordance with the methodology established by the State under § 266.15(c)(5) of this part;

(3) For construction or improvement of fixed facilities, a description of the proposed work, including:

(i) The cost and timing of the work; and

(ii) An assurance by the chief executive officer of the applicant that the Federal share of the project will be repaid in accordance with Attachment N of OMB Circular A–102, if the properties are not used for rail freight service during the useful life of the project properties;

(4) For relocation costs, the following assurances by the chief executive officer of the applicant:

(i) When the rail line related to the project is eligible under section 5(k)(4)(A) of the Act (49 U.S.C. 1654(k)(4)(A)), an assurance that the applicant is requesting only such assistance as is needed to relocate the shippers which were receiving rail service on the line at the time the Commission found that the public convenience and necessity would permit discontinuance or abandonment of the rail service;

(ii) When the rail line related to the project is eligible under section 5(k)(4)(B) of the Act (49 U.S.C. 1654(k)(4)(B)), an assurance that assistance is being requested to relocate only the shippers who received rail service on the line as of April 1, 1976; and

(iii) An assurance, and the basis therefor, that the shippers will not be relocated to a line with respect to which an application for a certificate of abandonment or discontinuance has been filed with the Commission or that if an application has been filed it will be withdrawn within a reasonable period following execution of a grant agreement and before Federal funds are disbursed for the project;

(5) An assurance by the chief executive officer of the applicant that after completion of the substitute service project, additional Federal assistance will not be requested for the continuation of the rail freight service that the substitute service is designed to replace, unless the Administrator determines that circumstances have changed so that continuation of rail freight service is more cost-effective than continued use of the substitute service project;

(6) A description of the arrangements made for operation of service where rail service is to be provided in conjunction with a substitute service project, including copies of proposed operating agreements, leases, or other compensation agreements under which service is to be provided; and

(7) An assurance by the chief executive officer of the applicant that assistance provided will not be used to pay the non-Federal share under any Federal program.

(j) *Execution and filing of applications.* (1) Each original application shall bear the date of execution and be signed by the chief executive officer of the agency submitting the application;

(2) Each application for planning assistance, and two (2) copies thereof, shall be filed with the Administrator through the appropriate Federal Highway Administration Division Office;

(3) Each application (excluding requests for planning assistance), and two (2) copies thereof, shall be filed with the Administrator through the appropriate Regional Director of Federal Assistance. A current list of the appropriate mailing addresses of the above officials will be provided by FRA to each State.

§ 266.19 Environmental impact.

(a) *General.* The Administrator has determined that providing assistance to cover the following costs is not a major action significantly affecting the quality of the human environment: Rehabilitation or improvement consisting of work normally performed on a periodic basis which does not change the existing character of the facility (including work to overcome normal periodic maintenance that had been deferred) rail service continuation, acquisition, and planning.

(b) *Substitute service assistance, rail facility construction assistance, and non-exempt rehabilitation or improvement assistance*—(1) *Environmental assessment.* (i) When an applicant requests substitute service assistance, rail facility construction assistance, or rehabilitation or improvement assistance (except for rehabilitation or improvement assistance which is exempt under paragraph (a) of this section), the applicant shall:

(A) Prepare an environmental assessment to determine whether the future use of the property will significantly affect the quality of the human environment; or

(B) Provide sufficient documentation to enable the Administrator to determine that the project satisfies the following criteria:

(*1*) The action is not likely to be environmentally controversial from the point of view of people living within the environment affected by the action or controversial with respect to the availability of adequate relocation housing;

(*2*) The action is not inconsistent with any Federal, State, or local law, regulation, ordinance, or judicial or administrative determination relating to environmental protection;

(*3*) The action will not have any significant adverse impact in any natural, cultural, recreational, or scenic environment(s) in which the action takes place, or on the air or water quality or ambient noise levels of such environment(s);

(*4*) The action will not: use 4(f)-protected properties; adversely affect properties under section 106 of the National Historic Preservation Act; involve new construction location in a wetlands area; or affect a base floodplain;

(*5*) The action will not cause a significant short- or long-term increase in traffic congestion, or other significant adverse environmental impact on any mode of transportation;

(*6*) The action is not an integral part of a program of actions which, when considered separately, would not be classified as major FRA actions, but when considered together would be so classified; and

(*7*) Environmental assessment or documentation is not required by any Federal law, regulation, guideline, order, or judicial or administrative determination other than this part.

(ii) Prior to submitting an application, FRA recommends that the applicant seek the Administrator's advice as to form and substance of the assessment for the project under consideration. The environmental assessment shall utilize an interdisciplinary approach in identifying the type, degree of effect, and probability of occurrence of primary, secondary and cumulative potential environmental impacts (positive and negative) of the proposed action and of alternative courses of action. The depth of coverage shall be consistent with the magnitude of the project and its expected environmental effects. The environmental assessment and all documents used as a basis for the assessment shall be submitted together with the application for assistance.

(2) *Environmental impact statement.* A draft environmental impact statement (EIS) shall be submitted with each application when the environmental assessment concludes that the future use significantly affects the quality of human environment. FRA recommends that prior to submitting the application, the applicant seek the Administrator's advice as to form and substance of the EIS for the project under consideration.

(3) *Finding of no significant impact.* A draft finding of no significant impact declaration shall be submitted with each application when the applicant's environmental assessment concludes that the figure use does not significantly affect the quality of the human

environment. The finding of no significant impact shall include a description of the project, and sufficient data and environmental findings to support the conclusions as to the impact upon the quality of the human environment. FRA recommends that prior to submitting the application, the applicant seek the Administrator's advice as to the form and substance of this finding for the project under consideration.

(4) *Section 4(f) determination.* For projects involving the use of any land from a public park, recreation area, wildlife and waterfowl refuge, or historic site of national, State or local significance as determined by the Federal, State, or local officials having jurisdiction thereon, information to support a determination pursuant to section 4(f) of the Act shall be submitted together with the application. The section 4(f) determination shall document that:

(i) There is no feasible and prudent alternative to the use of such land; and

(ii) The project includes all planning to minimize harm resulting from such use.

(5) *Historic preservation.* For projects involving the use of historic, cultural or archeological resources listed or eligible for listing in the National Register of Historic Places, information which documents that the Advisory Council on Historic Preservation has been afforded an opportunity for review and comment on the proposed project in accordance with 16 U.S.C. 470 and 36 CFR part 800 shall be submitted with the application.

(c) *Highway or highway-related facilities.* Substitute service projects involving highway or highway-related facilities are subject to the applicable substantive Federal Highway Administration regulations on environmental considerations (23 CFR part 771).

§ 266.21 Grant agreement and disbursement.

(a) *Grant agreement.* (1) Upon the approval of an application meeting the requirements of § 266.17 of this part, a grant agreement for the Federal share of the approved amount of estimated program costs will be executed by the Administrator and the grantee.

(2) The grant agreement will identify the amount of the grantee's share of program costs to be furnished in cash and through approved in-kind benefits. The grantee shall expend a pro-rata share of its cash contribution at the same time payments of the Federal share are made available to the grantee.

(b) *Disbursement.* (1) Federal funds are provided either in advance by a letter-of-credit or a Treasury check or by reimbursement in accordance with Attachment J of OMB Circular A–102.

(2) Prior to receipt of advance payments, the grantee must have demonstrated to the satisfaction of the Administrator that it has established procedures to comply with OMB Circular A–102, Attachment J, including procedures that will minimize the time elapsing between the receipt of funds by the grantee and their disbursement. Evidence of such compliance shall be provided to the Administrator at least 30 days prior to the anticipated date of receipt of advance payments. An advance by letter-of-credit is used when the rail service assistance is expected to be provided for a minimum of one (1) year, and is expected to involve annual payments aggregating at least $120,000. Otherwise, advance payments are made by Treasury check.

(3) If the grantee is not eligible for advance payments or does not desire them, the grantee will be reimbursed for eligible expenditures at the end of each fiscal quarter upon submission of a request for reimbursement.

(4) Before disbursement of Federal funds can be made to a grantee for payment to third parties under this subsection, the grantee must have executed an agreement with the third party.

(5) Acquisition assistance will be disbursed only after the following have been approved by the Administrator:

(i) A title opinion of the chief legal officer of the grantee that describe the type of title being acquired, and if a general warranty deed is not being given, it must explain why it could not be given. The opinion shall also advise of any need for use of the State's eminent domain powers to assure adequate title. In addition, the opinion shall explain how the defects disclosed by the

title search might affect the marketability of the property;

(ii) A written determination that the property acquired is limited to the land and facilities that are needed for the rail freight services which would have been curtailed or abandoned but for the acquistion has been accepted by the Administrator; and

(iii) A written determination that the purchase price is consistent with the value of the property interest being acquired, and the evidence upon which the determination is based.

(c) *Settlement.* (1) Settlement under the grant agreement is made on the basis of a Federal audit which has determined the allowable costs over the entire term of the grant agreement. If the Federal audit determines that the allowable costs under the grant agreement are less than the amount of the grant, the difference shall be refunded to FRA at the end of the fiscal year in which the audit was made unless it has become the subject of another executed grant agreement. Upon termination of a State's participation in the Rail Service Assistance Program, the State shall repay FRA the Federal share of any unused rehabilitation and improvement assistance and any accumulated interest.

§ 266.23 Record, audit, and examination.

(a) Retention and custodial requirements for financial records, supporting documents, statistical records, and all other records pertinent to a grant provided under this part shall be governed by Attachment C of OMB Circular A–102.

(b) The Administrator and the Comptroller General of the United States or any of their duly authorized representatives shall, until the expiration of three years after submission to the Administrator of the grantee's final accounting of all program funds, and for any longer period necessary to resolve audit findings, have access for the purpose of audit and examination to any books, documents, papers, and records which in the opinion of the Administrator or the Comptroller General of the United States may be related or pertinent to the grants, contracts, or other arrangements arising out of, or in any way connected with, the rail service assistance program.

§ 266.25 Waivers and modifications.

The Administrator may, with respect to individual requests, upon good cause shown, waive or modify any requirement of this part not required by law or make any additional requirements the Administrator deems necessary. Procedures for submission and consideration of petitions for waiver or modification are governed by 49 CFR part 211.

PART 268—MAGNETIC LEVITATION TRANSPORTATION TECHNOLOGY DEPLOYMENT PROGRAM

Subpart A—Overview

Sec.
268.1 Definitions.
268.3 Different phases of the Maglev Deployment Program.
268.5 Federal funding sources for the Maglev Deployment Program.
268.7 Federal/State share and restrictions on the uses of Federal Maglev Funds.

Subpart B—Procedures For Financial Assistance

268.9 Eligible participants.
268.11 Project eligibility standards.
268.13 Deadline for submission of applications for preconstruction planning assistance.
268.15 Form and contents of applications for preconstruction planning assistance.
268.17 Project selection criteria.
268.19 Evaluation of applications for preconstruction planning assistance.
268.21 Down-selection of one or more Maglev projects for further study and selection of one project for final design, engineering, and construction funding.

AUTHORITY: 49 U.S.C. 322; 23 U.S.C. 322; 49 CFR 1.49.

SOURCE: 65 FR 2344, Jan. 14, 2000, unless otherwise noted.

Subpart A—Overview

§ 268.1 Definitions.

As used in this part—

CMAQ means Congestion Mitigation and Air Quality Improvement Program (23 U.S.C. 149).

Environmental assessment (''EA'') means the environmental assessment

in support of the project description and containing the information listed in § 268.11(b)(6)(i).

Environmental impact statement (''EIS'') means the environmental impact statement which is required pursuant to §§ 268.3.

Eligible project costs means the costs of preconstruction planning activities and the capital cost of the fixed guideway infrastructure of a Maglev project, including land, piers, guideways, propulsion equipment and other components attached to guideways, power distribution facilities (including substations), control and communications facilities, access roads, and storage, repair, and maintenance facilities, but eligible project costs do not include the cost of stations, vehicles, and equipment.

Federal Maglev funds means such funds as are provided under the authority of 23 U.S.C. 322 to pay for Eligible Project Costs.

Full project costs means the total capital costs of a Maglev project, including Eligible Project Costs and the costs of stations, vehicles, and equipment.

Phase means one of the five different phases of the Maglev Deployment Program; these phases are described in § 268.3.

Maglev means transportation systems employing magnetic levitation that would be capable of safe use by the public at a speed in excess of 240 miles per hour.

Maglev Deployment Program means the program authorized by 23 U.S.C. 322.

Partnership potential means the usage of the term in the commercial feasibility study of high-speed ground transportation (*High Speed Ground Transportation for America*) mandated under section 1036 of the Intermodal Surface Transportation Efficiency Act of 1991 (105 Stat. 1978). Under that usage any corridor exhibiting Partnership Potential must at least meet the following two conditions:

(1) Private enterprise must be able to run on the corridor—once built and paid for—as a completely self-sustaining entity; and

(2) The total benefits of a Maglev corridor must equal or exceed its total costs.

STP means the Surface Transportation Program (23 U.S.C. 133).

TEA 21 means the Transportation Equity Act for the 21st Century (Public Law No. 105–178, 112 Stat. 107).

§ 268.3 Different phases of the Maglev Deployment Program.

(a) The Maglev Deployment Program includes five phases, as described in paragraphs (b) through (f) of this section. The current projected timing for implementing these phases is indicated to assist applicants in planning their projects. All dates beyond the first date (the deadline for the submission of preconstruction planning applications) are for planning purposes only and are subject to change—including possible acceleration of deadlines—based on the progress of the Maglev Deployment Program; grantees will be notified accordingly.

(b) *Phase I—Competition for Planning Grants (Early October 1998—September 15, 1999)*—(1) *Description*. In Phase I, States will apply for funds for preconstruction planning activities. As required by § 268.13, applications must be filed with FRA by February 15, 1999. FRA will select one or more projects to receive preconstruction planning financial assistance awarded under this part to perform Phase II of the Maglev Deployment Program.

(2) *Timing of Major Milestones*. (i) February 15, 1999—Planning grant applications due.

(ii) May 24, 1999—FRA announces grantees for planning grants.

(iii) August 31, 1999—FRA awards planning grants for the conduct of activities listed in Phase II.

(c) *Phase II—Project Description Development (July 1, 1999—June 30, 2000)*—(1) *Description*. In Phase II, each grant recipient will prepare and submit to FRA a project description, supporting preconstruction planning reports, and an EA. Supporting reports may include demand and revenue analyses, project specification, cost estimates, scheduling, financial studies, a system safety plan (including supporting analysis), and other information in support of the project description. FRA will use this information in reaching a decision on which projects to down-select for completion of site-specific environmental

studies, investment grade revenue forecasts, and other studies and analyses necessary prior to initiation of construction. FRA will initiate documentation of environmental factors considered in the project selection process.

(2) *Timing of Major Milestones.* (i) February 29, 2000—Deadline for submission of appropriate EA's needed by FRA for the down-selection of one or more projects under Phase III.

(ii) June 30, 2000—Deadline for submission of project descriptions and any related supporting reports needed by FRA for down-selection of one or more projects.

(d) *Phase III—Project Selection Process (July 1, 2000—September 30, 2000)*—(1) *Description.* FRA will evaluate the information provided by the grant recipients under Phase II and will down-select one or more projects for completion of additional environmental studies, investment grade revenue forecasts, and other studies and analyses necessary prior to initiation of construction.

(2) *Timing of Major Milestones.* September 30, 2000—FRA down-selects one or more project(s).

(e) *Phase IV—Project Development and Completion of Site-specific EIS (October 1, 2000—November 30, 2001)*—(1) *Description.* The financial assistance recipient(s) down-selected in Phase III will complete additional environmental studies, investment grade revenue forecasts, and other studies and analyses necessary prior to initiation of construction, and address issues raised by FRA's review of system safety plans (including supporting analysis). They will also initiate final design and engineering work for the down-selected project(s). If more than one project is down-selected in Phase III, FRA will select one of them for final design, engineering, and construction funding. Detailed agreements for the construction and operation of the selected project will be negotiated.

(2) *Timing of Major Milestones.* (i) March 31, 2001—If more than one project is down-selected in Phase III, FRA will select one project.

(ii) December 31, 2001—FRA will issue a Final Record of Decision on the site-specific EIS for the one selected project, confirming the project design.

(f) *Phase V—Completion of Detailed Engineering and Construction January 1, 2002 and beyond).* In Phase V, the sponsoring State or State-designated authority will oversee the efforts of the public/private partnership formed to progress the selected project, to complete the detailed engineering designs, and finance, construct, equip, and operate the project in revenue service. Construction will be contingent upon the appropriation of Federal funds. In no event will construction be authorized until FRA is fully satisfied that the system will meet appropriate safety standards.

§ 268.5 Federal funding sources for the Maglev Deployment Program.

(a) *Federal Maglev Funds.* Section 322 of Title 23 provides for the following funds for the Maglev Deployment Program:

(1) *Contract authority.* Fifty-five million has been made available for the Maglev Deployment Program as contract authority from the Highway Trust Fund for Fiscal Years 1999 through 2001; this would be used to fund the competition in all its phases and could also be used for final design, engineering, and construction activities of the selected project. Of the $55 million, the Congress has made available up to $15 million for Fiscal Year 1999, up to $15 million for Fiscal Year 2000, and $25 million for Fiscal Year 2001.

(2) *Authorization for appropriations.* Nine hundred fifty million, also from the Highway Trust Fund, has been authorized to be appropriated for the Maglev Deployment Program for Fiscal Years 2000 through 2003. Of the $950 million, $200 million is authorized to be appropriated for each of Fiscal Years 2000 and 2001, $250 million for Fiscal Year 2002, and $300 million for Fiscal Year 2003. Any decision to proceed with possible Federal funding of the construction of a Maglev system will be contingent upon the receipt of appropriations, and upon completion of appropriate environmental documentation.

(b) *Other Federal funds.* Section 322 of Title 23 provides that the portion of

the Maglev project not covered by Federal Maglev Funds may be covered by any non-Federal funding sources—including private (debt and/or equity), State, local, regional, and other public or public/private entities—as well as by Federally-provided STP and CMAQ funds, and by other forms of financial assistance made available under title 23 and TEA 21, such as loans and loan guarantees.

(c) *Costs Incurred in Advance of Cooperative Agreement*. Certain costs incurred in advance of the execution of a cooperative agreement between FRA and the grantee for pre-construction planning but after enactment of TEA 21 (June 9, 1998) will be eligible for reimbursement, but such costs are allowable only to the extent that they are otherwise allowable under the terms of a fully executed cooperative agreement.

§ 268.7 Federal/State share and restrictions on the uses of Federal Maglev Funds.

(a) *Federal share*. The Federal share of Full Projects Costs shall be not more than ⅔, with the remaining ⅓ paid by the grant recipient using non-Federal funds. Funds made available under STP and CMAQ are considered non-Federal funds for purposes of the matching requirement.

(b) *Restrictions on the uses of Federal Maglev Funds*. (1) Federal Maglev Funds may be applied only to Eligible Project Costs;

(2) Federal Maglev Funds provided under a preconstruction planning grant may be used only for Phase II activities, and for completion of site-specific draft EIS's; see § 268.3;

(3) Federal Maglev Funds may be used to pay for only ⅔ of preconstruction planning costs; grant recipients are required to pay the remaining ⅓ of the costs with non-Federal funds; and

(4) The ''prevailing wages'' requirement of the Davis Bacon Act (40 U.S.C. 276a–276a–5) applies to any construction contracts under the Maglev Deployment Program.

Subpart B—Procedures For Financial Assistance

§ 268.9 Eligible participants.

Any State, or any authority designated by one or more State(s) to carry out the preconstruction planning activities under the Maglev Deployment Program is eligible to participate in the Maglev Deployment Program.

§ 268.11 Project eligibility standards.

(a) *Project eligibility standards for preconstruction planning financing*. (1) As required by 23 U.S.C. 322(d)(4), in order to be eligible to receive financial assistance, a Maglev project shall:

(i) Involve a segment or segments of a high-speed ground transportation corridor that exhibit Partnership Potential;

(ii) Require an amount of Federal funds for project financing that will not exceed the sum of Federal Maglev Funds, and the amounts made available by States under STP and CMAQ;

(iii) Result in an operating transportation facility that provides a revenue producing service;

(iv) Be undertaken through a public and private partnership, with at least ⅓ of Full Project Costs paid using non-Federal funds;

(v) Satisfy applicable statewide and metropolitan planning requirements;

(vi) Be approved by FRA based on an application submitted by a State or authority designated by one or more States;

(vii) To the extent that non-United States Maglev technology is used within the United States, be carried out as a technology transfer project; and

(viii) Be carried out using materials at least 70 percent of which are manufactured in the United States.

(2) FRA recognizes that applicants for preconstruction planning grants will not have detailed information with respect to some of the requirements of paragraph (a)(1) of this section, and that the purpose of a preconstruction planning grant is to develop much of this information with respect to a particular Maglev project. As required by § 268.15, an applicant will need to provide whatever information it has with respect to each of the requirements of

paragraph (a)(1) of this section, together with a certification that the applicant fully intends to comply with the requirements of this paragraph (a) should its project be selected by FRA for final design, engineering and construction financing.

(b) *Project eligibility standards for final design, engineering, and construction financing.* FRA will select the most promising Maglev project for final design, engineering, and construction financing. To be eligible to be considered, the project must meet each of the following requirements; these requirements restate the requirements in paragraph (a)(1) of this section, but with more detail and in a different order:

(1) *Purpose and significance of the project.* (i) The project description shall point to a Maglev facility and daily operation the primary purpose of which is the conduct of a revenue-producing passenger transportation service between distinct points, rather than a service solely for the passengers' riding pleasure.

(ii) The project description shall incorporate scheduled operation at a top speed of not less than 240 mph.

(2) *Benefits for the American economy.* The project description shall include a certification as to paragraphs (b)(2) (i) and (ii) of this section and, as appropriate, a technology acquisition/transfer plan which describes the strategy for their accomplishment.

(i) Processes will be established that will enable an American-owned and -sited firm (or firms) to gain, in the course of the project, the capability to participate in the design, manufacture, and installation of the facilities and vehicles needed for a Maglev operation, if the owner of the selected version of Maglev technology is not an American-owned and -sited firm (thus meeting the technology transfer requirement of 23 U.S.C. 322).

(ii) The 70 percent U.S. content requirement content of 23 U.S.C. 322 will be carried out.

(3) *Partnership potential.* The project shall exhibit Partnership potential by satisfying the following:

(i) A private/public partnership must be in place that is ready, willing, and able to finance, construct, operate, and maintain the project;

(ii) The private/public partnership either owns the version of Maglev technology proposed to be implemented in the project, or has an agreement with the owner which affords full cooperation to the partnership in progressing the project, including implementation of the technology acquisition/transfer plan if applicable; and

(iii) The recipient of a preconstruction planning grant or the FRA has developed and endorsed a projection of system capital costs, demand, revenues, operating expenses, and total costs and benefits, that:

(A) Covers either the entire corridor in which the Maglev project is involved (''Corridor''), or the project considered independently;

(B) Demonstrates that private enterprise would be able to run the Corridor or the project—once built and paid for—as a completely self-sustaining entity, in which revenues will cover operating expenses and continuing investment needs; and

(C) Shows total benefits equal to or exceeding total costs.

(4) *Funding Limits and Sources.* The project description shall include a financing plan that demonstrates project completion with the $950 million in Federal Maglev Funds, funds remaining unobligated from the $55 million in contract authority, and the funds made available under STP and CMAQ. The project that is selected will be eligible for other forms of financial assistance provided under title 23 and TEA 21, including loans, loan guarantees, and lines of credit. However, at least ⅓ of Full Project Costs must come from non-Federal Funds.

(5) *Project Management.* The State, the technology owner, and all other relevant project partners must include in the project description, an agreed upon—

(i) *Management plan* that defines the partnership, responsibilities, and procedures for accomplishing the project;

(ii) *Project schedule* that shows how timely implementation of the project will be accomplished, including, to the extent possible, a construction plan and schedule; and

(iii) *Financial plan* that shows how funds will flow, in accordance with the other requirements of this subsection.

(6) *Planning/environmental process*—(i) *Assessment of environmental consequences of the proposed project.* Recipients of preconstruction planning grants shall conduct an EA in support of the project description; and will prepare additional environmental studies for the project. The EA shall include information to support the grantee's decision to pursue the proposed project. The grantee shall develop the information and discuss the environmental consequences of the proposed technology and route in sufficient detail for the preparation of appropriate documentation by FRA to support selection of one project. This shall include: the identification of potential positive and negative environmental effects resulting from the technology (e.g. energy consumption compared to other transportation options); generic noise emissions at various distances from the centerline of the guideway; changes in electromagnetic field levels at various distances from the centerline of the guideway; and environmental screening of the proposed route (e.g., identification of land use; identification of endangered species possibly present and location of their critical habitat; identification of navigable waterways, wetlands and other sensitive water resources; and identification of the location of parks, wildlife refuges, historic and archaeological sites of National, State or local significance and other sites protected by section 4(f) of the Department of Transportation Act). The latter information and analysis shall be submitted four months in advance of the remainder of the project description. The above list is illustrative only. Grantees will be expected to review proposed work statements with FRA at pre-application meetings or through some other means to develop the final scope of this environmental review.

(ii) The project description must also include letters of endorsement of project implementation from all the State departments of transportation involved, and from all Metropolitan Planning Organizations for metropolitan areas that would be served by the project.

§ 268.13 Deadline for submission of applications for preconstruction planning assistance.

Completed application packages shall be returned to FRA by December 31, 1998. Applications shall be submitted to: Honorable Jolene M. Molitoris, Administrator, Federal Railroad Administration, ATTN: Maglev Project, RDV–11, 400 Seventh Street, SW, Stop 20,Washington, DC 20590.

§ 268.15 Form and contents of applications for preconstruction planning assistance.

States, groups of States, or designated authorities that have Maglev projects are invited to submit applications in Phase I of the Maglev Deployment Program, the competition for preconstruction planning grants. The applications shall contain:

(a)(1) If submitted by a State: name, address, responsible party, telephone, fax number, and e-mail address of the State agency submitting the application; or

(2) If submitted by a designated authority: name, address, responsible party, telephone, fax number, and e-mail address of the designated authority and of the State agency or agencies on whose behalf the designated authority is submitting the application, together with letters from the State(s) evidencing all such designations;

(b) A description of the project concept, identifying its likely location, market area, length, and the transportation service that it would perform, and a preliminary estimate of the time that would be required—if funds are made available—to bring the project to the start of construction and then to the initiation of full revenue service. At its option, the applicant may include any reports already completed on the project as well as any additional descriptive material that would assist the FRA in evaluating the application;

(c) Whatever information the applicant has to demonstrate that the project meets the project eligibility standards in § 269.11(a), and the project selection criteria in § 268.17. together with a certification that the applicant

fully intends to comply with the requirements in § 269.11 should its project be selected by FRA for final design, engineering and construction financing.

(d) A statement of work for the preconstruction planning activities to be accomplished under the planning grant. The statement shall describe the work to be performed, including but not necessarily limited to:

(1) Preconstruction planning work as is needed to develop a Maglev project, and project description that will satisfy the project eligibility standards in § 268.11(b), and the project selection criteria in § 268.17; and

(2) Preparation of EAs, as described in § 268.11(b)(6)(i);

(e) Management plan, schedule, and financial plan for accomplishing the preconstruction planning work under the planning grant;

(f) Letters supporting the application from the heads of all State departments of transportation involved, as well as from responsible officials of the Metropolitan Planning Organizations of all metropolitan areas to be served by the proposed project;

(g) A certification from the State, or from the authority designated by one or more States, that the ⅓ matching funds required for work under the planning grant are, or will be, available by the time the grants are announced. The source(s) of the matching must be shown in the financial plan under paragraph (e); and

(h) If the applicant has made a definitive choice of the particular Maglev technology proposed to be included, a description of that technology and the degree to which it has been produced and tested should be submitted. Further, if the applicant has identified organizations that would form members of the team that would implement the project, the names of those organizations and the persons representing them should also be submitted.

§ 268.17 Project selection criteria.

Except as qualified by § 268.19, the following criteria will govern FRA's selection of projects to receive funding under the Maglev Deployment Program.

(a) *Purpose and significance of the project.* (1) The degree to which the project description demonstrates attractiveness to travelers, as measured in passengers and passenger-miles.

(2) The extent to which implementation of the project will reduce congestion, and attendant delay costs, in other modes of transportation; will reduce emissions and/or energy consumption; or will reduce the rate of growth in needs for additional highway or airport construction. Measures for this criterion will include but not be limited to the present value of congestion reduction, pollution reduction, and/or facility cost-avoidance benefits.

(3) The degree to which the project will demonstrate the variety of operating conditions which are to be expected in the United States.

(4) The degree to which the project will augment a Maglev corridor or network that has been identified, by any State, group of States, or the FRA, as having Partnership Potential.

(b) *Timely implementation.* The speed with which the project can realistically be brought into full revenue service, based on the project description and on the current and projected development status of the Maglev technology selected by the applicant for the project.

(c) *Benefits for the American economy.* The extent to which the project is expected to create new jobs in traditional and emerging industries in the United States.

(d) *Partnership potential.* The degree to which the project description demonstrates Partnership Potential for the corridor in which it is involved, and/or for the project independently.

(e) *Funding limits and sources.* (1) The extent and proportion to which States, regions, and localities commit to financially contributing to the project, both in terms of their own locally-raised, entirely non-Federal funds, and in terms of commitments of scarce Federal resources from non-Maglev funds; and

(2) The extent and proportion to which the private sector contributes financially to the project.

NOTE TO § 268.17: FRA recognizes that applicants for preconstruction planning assistance may not have detailed information with respect to each of these criteria, and that the purpose of the preconstruction planning

assistance is to develop much of this information with respect to a particular Maglev project. The preconstruction planning application requirements of this part 268 are designed to elicit whatever information an applicant may have pertaining to these criteria.

§ 268.19 Evaluation of applications for preconstruction planning assistance.

The FRA will evaluate the applications for their completeness and responsiveness to the requirements listed in § 268.15. In addition, applicants are advised that the Maglev Deployment Program contains a number of project eligibility standards (minimum threshold standards) and project evaluation criteria that will guide the FRA's review of the project descriptions produced under the Planning Grants. The FRA's implementation of these standards and criteria appears in § 268.11 and § 268.17, respectively. Although subject to revision, the information in § 268.11 and § 268.17 should assist the States in completing their applications in the competition for planning grants, since the project descriptions will need to respond to the standards and criteria. In evaluating the applications for planning grants, FRA will consider how consistent the applicant's project is to the standards and criteria, and the application's likelihood of leading to a project that meets all the standards and criteria.

§ 268.21 Down-selection of one or more Maglev projects for further study and selection of one project for final design, engineering, and construction funding.

(a) Upon completion of Phase III of the Maglev Deployment Program, FRA will down-select one or more projects to complete additional environmental studies, investment grade revenue forecasts, and other studies and analyses necessary prior to initiation of construction. Final design and engineering work will also be initiated for the down-selected project(s). To be down-selected a project must appear to meet the project eligibility standards contained in § 268.11 (b), rate highly in the project selection criteria specified in § 268.17, be judged by FRA to have a good chance of being constructed with the Federal funds authorized for this program, and be successfully operated by a public/private partnership.

(b) Only one project will be selected in Phase IV of the Maglev Deployment Program and be eligible for any Federal construction funds that Congress chooses to make available. That one project must meet each and every project eligibility standard contained in § 268.11 (b). If more than one project down-selected in Phase III and funded through Phase IV meets all of these standards, then FRA will evaluate and compare the eligible projects according to the set of project selection criteria contained in § 268.17.

(c) In reviewing competing projects under the project eligibility standards and project selection criteria, the FRA will exercise particular vigilance regarding the following elements of the preconstruction planning process, although not to the exclusion of others:

(1) The credibility of the demand and revenue forecasts, cost estimates, and benefit/cost comparisons; and

(2) The credibility of the financial plan.

(d) FRA intends to make periodic reviews of the processes and products of grant recipients. Such reviews may include, at the FRA's option, reviews at key milestones in the preparation of project descriptions.

PARTS 269–299 [RESERVED]

FINDING AIDS

A list of CFR titles, subtitles, chapters, subchapters and parts and an alphabetical list of agencies publishing in the CFR are included in the CFR Index and Finding Aids volume to the Code of Federal Regulations which is published separately and revised annually.

Material Approved for Incorporation by Reference
Table of CFR Titles and Chapters
Alphabetical List of Agencies Appearing in the CFR
List of CFR Sections Affected

Material Approved for Incorporation by Reference

(Revised as of October 1, 2008)

The Director of the Federal Register has approved under 5 U.S.C. 552(a) and 1 CFR part 51 the incorporation by reference of the following publications. This list contains only those incorporations by reference effective as of the revision date of this volume. Incorporations by reference found within a regulation are effective upon the effective date of that regulation. For more information on incorporation by reference, see the preliminary pages of this volume.

49 CFR (PARTS 200–299)

FEDERAL RAILROAD ADMINISTRATION, DEPARTMENT OF TRANSPORTATION

	49 CFR
American National Standards Institute (ANSI) 25 West 43rd Street, 4th Floor, New York, NY 10036; phone: 1 (212) 642–4900; fax: 1 (212) 398–0023; http://webstore.ansi.org/ansidocstore/default.asp	
ANSI S1.4–1983 (Reaffirmed 2001), Specification for Sound Level Meters.	227.103(c)(2)(i); 227, Appendix D
ANSI S1.11–2004, Specification for Octave–Band and Fractional Octave–Band Analog and Digital Filters.	227, Appendix D
ANSI S1.25–1991 (Reaffirmed 2002), Specification for Personal Noise Dosimeters.	227.103(c)(2)(iii)
ANSI S1.40–1984 (Reaffirmed 2001), Specification for Acoustical Calibrators.	229, Appendix H
ANSI S1.43–1997 (Reaffirmed 2002), Specifications for Integrating–Averaging Sound Level Meters.	227.103(c)(2)(ii); 229, Appendix H
ANSI S3.6–2004, Specification for Audiometers	227.111; 227, Appendix E
ANSI S12.6–1997 (Reaffirmed 2002), Methods for Measuring the Real–Ear Attenuation of Hearing Protectors.	227, Appendix B
ANSI Z41–1991, American National Standard for Personal Protection–Protective Footwear.	214.115
ANSI Z87.1–1989, Practice for Occupational and Educational Eye and Face Protection.	214.117
ANSI Z89.1–1986, Protective Headwear for Industrial Workers	214.113
American Public Transit Association 1201 New York Avenue NW., Washington, DC 20005	
APTA Standard SS–M–005–98, Code of Tests for Passenger Car Equipment Using Single Car Testing Device (March 1998).	238.311
APTA Standard SS–C&S–020–03, Standard for Passenger Rail Vehicle Structural Repair (September 2003).	238.229(j)(1)(i); 238.230(c)(2)
American Railway Engineering and Maintenance of Way Association (AREMA) 8201 Corporation Drive, Suite 1125, Landover, MD 20785–2230	
AREMA Communications and Signal Manual, Volume 4, Section 17: ''Quality Principles'', 2005.	236.909
American Society for Testing and Materials 100 Barr Harbor Drive, West Conshohocken, PA, 19428–2959, Telephone (610) 832–9585, FAX (610) 832–9555	

49 CFR (PARTS 200–299)—Continued

FEDERAL RAILROAD ADMINISTRATION, DEPARTMENT OF TRANSPORTATION—Continued

	49 CFR
ASTM C 90–70 Standard Specification for Hollow Load–Bearing Concrete Masonry Units.	Part 223, Appendix A
ASTM C 33–77 Standard Specification for Lightweight Aggregates for Concrete Masonry Units.	Part 223, Appendix A
ASTM C 1166–00, Standard Test Method for Flame Propagation of Dense and Cellular Elastomeric Gaskets and Accessories.	Part 238, Appendix B
ASTM D 2724–87, Standard Test Methods for Bonded, Fused, and Laminated Apparel Fabrics.	Part 238, Appendix B
ASTM D 3574–95, Standard Test Methods for Flexible Cellular Materials—Slab, Bonded, and Molded Urethane Foams.	Part 238, Appendix B
ASTM D 3675–98, Standard Test Method for Surface Flammability of Flexible Cellular Materials Using Radiant Heat Energy Source.	Part 238, Appendix B
ASTM D 4956–04, Standard Specification for Retroreflective Sheeting for Traffic Control.	224.103
ASTM D 4956–07, Standard Specification for Retroreflective Sheeting for Traffic Control, 2007.	238.5
ASTM E 119–00a, Standard Test Methods for Fire Tests of Building Construction and Materials.	Part 238, Appendix B
ASTM E 162–98, Standard Test Method for Surface Flammability of Materials Using a Radiant Heat Energy Source.	Part 238, Appendix B
ASTM E 648–00, Standard Test Method for Critical Radiant Flux of Floor–Covering Systems Using a Radiant Heat Energy Source.	Part 238, Appendix B
ASTM E 662–01, Standard Test Method for Specific Optical Density of Smoke Generated by Solid Materials.	Part 238, Appendix B
ASTM E 1354–99, Standard Test Method for Heat and Visible Smoke Release Rates for Materials and Products Using an Oxygen Consumption Calorimeter.	Part 238, Appendix B
ASTM E 1537–99, Standard Test Method for Fire Testing of Upholstered Furniture.	Part 238, Appendix B
ASTM E 1590–01, Standard Test Method for Fire Testing of Mattresses	Part 238, Appendix B
American Society of Mechanical Engineers	
Three Park Avenue, New York, NY 10016–5990; phone: 1–800–843–2763 or 1–973–882–1170; fax: 1–973–882–1717; http://www.asme.org/	
Boiler and Pressure Vessel Code (1971 Ed.):	
Section II, Part B, page 123	229.51(a)(1)
Section VIII, Division I	229.51(a)(2)
Association of American Railroads	
50 F St. NW, Washington, DC 20001	
AAR Manual of Standards and Recommended Practices, Section E, January 1, 2001	
AAR Standard S–486–01, Section 3.0: ''Tests—Standard Freight Brake Equipment'', January 1, 2001.	232.305
AAR Standard S–486–01, Section 4.0: ''Special Tests'', January 1, 2001.	232.305
AAR Standard S–469–47, ''Performance Specification for Freight Brakes'', April 1, 1999.	232.103
AAR Standard S–580: ''Locomotive Crashworthiness Requirements,'' revised July 2005.	229.205; 229.206
AAR Standard S–5506: ''Performance Requirements for Diesel Electric Locomotive Fuel Tanks,'' revised 2001.	229.217

49 CFR (PARTS 200–299)—Continued

FEDERAL RAILROAD ADMINISTRATION, DEPARTMENT OF TRANSPORTATION—Continued

	49 CFR
AAR Code of Rules for Cars in Interchange, 1979	232.17(b)
AAR Code of Tests, Instruction Pamphlet No. 5039–4, Sup. 1, Single Car Testing Device, 1974.	232.17(a)
AAR Railway Signaling Principles and Practices, Ch. 2: Symbols, Aspects and Indications, 1956.	235.12(b)
General Services Administration	
Federal Supply Service, Specification Section, 470 East L'Enfant Plaza, SW., Suite 8100, Washington, DC 20407	
FED–STD–191A, Textile Test Method 5830, Leaching Resistance of Cloth; Standard Method, July 20, 1978.	Part 238, Appendix B
Illuminating Engineering Society (IES)	
Federal Railroad Administration, Office of the Associate Administrator, Nassif Bldg., 400 Seventh St. SW., Washington, DC 20590	
IES Guide for Calculating the Effective Intensity of Flashing Signal Lights, Nov. 1964.	221.5(h)
Institute of Electircal and Electronics Engineers, Inc. (IEEE)	
345 East 47th Street, New York, NY 10017	
ANSI/IEEE Std. 383–1974, IEEE Standard for Type Test of Class 1E Electrical Cables, Field Splices, and Connections for Nuclear Power Generating Stations.	Part 238, Appendix B
National Electrical Manufacturers Association (NEMA)	
1300 North 17th Street, Suite 1847, Rosslyn, VA 22209; Telephone: (703) 841–3200; FAX: (703) 841–3300	
NEMA WC 3/ICEA S–19–1981, Rubber Insulated Wire and Cable for the Transmission and Distribution of Electrical Energy (part 6, section 19, paragraph 6) Revision 1, 6th edition, February 1994.	Part 238, Appendix B
State of California Department of Consumer Affairs	
Bureau of Home Furnishings and Thermal Insulation, 3485 Orange Grove Ave., North Highlands, CA 95660–5595	
California Technical Bulletin (CAL TB)129, Flammability Test Procedure for Mattresses for Use in Public Buildings, October 1992.	Part 238, Appendix B
California Technical Bulletin 133, Flammability Test Procedure for Seating Furniture for Use in Public Occupancies, January 1991.	Part 238, Appendix B
Underwriters Laboratories, Inc. (UL)	
333 Pfingsten Road, Northbrook, IL 60062–2096	
UL 44, Standard for Safety of Thermoset–Insulated Wires and Cables, 14th edition, January 27, 1997.	Part 238, Appendix B
UL 83, Standard for Safety for Thermoplastic–Insulated Wires and Cables, 12th edition, September 29, 1998.	Part 238, Appendix B

Table of CFR Titles and Chapters

(Revised as of October 1, 2008)

Title 1—General Provisions

I Administrative Committee of the Federal Register (Parts 1—49)
II Office of the Federal Register (Parts 50—299)
IV Miscellaneous Agencies (Parts 400—500)

Title 2—Grants and Agreements

SUBTITLE A—OFFICE OF MANAGEMENT AND BUDGET GUIDANCE FOR GRANTS AND AGREEMENTS

I Office of Management and Budget Governmentwide Guidance for Grants and Agreements (Parts 100—199)
II Office of Management and Budget Circulars and Guidance (200—299)

SUBTITLE B—FEDERAL AGENCY REGULATIONS FOR GRANTS AND AGREEMENTS

III Department of Health and Human Services (Parts 300— 399)
VI Department of State (Parts 600—699)
VIII Department of Veterans Affairs (Parts 800—899)
IX Department of Energy (Parts 900—999)
XI Department of Defense (Parts 1100—1199)
XII Department of Transportation (Parts 1200—1299)
XIV Department of the Interior (Parts 1400—1499)
XV Environmental Protection Agency (Parts 1500—1599)
XVIII National Aeronautics and Space Administration (Parts 1880—1899)
XXII Corporation for National and Community Service (Parts 2200—2299)
XXIII Social Security Administration (Parts 2300—2399)
XXIV Housing and Urban Development (Parts 2400—2499)
XXV National Science Foundation (Parts 2500—2599)
XXVI National Archives and Records Administration (Parts 2600—2699)
XXVII Small Business Administration (Parts 2700—2799)
XXVIII Department of Justice (Parts 2800—2899)
XXXI Institute of Museum and Library Services (Parts 3100—3199)
XXXII National Endowment for the Arts (Parts 3200—3299)
XXXIII National Endowment for the Humanities (Parts 3300—3399)
XXXV Export-Import Bank of the United States (Parts 3500—3599)
XXXVII Peace Corps (Parts 3700—3799)

Title 3—The President

Chap.

I Executive Office of the President (Parts 100—199)

Title 4—Accounts

I Government Accountability Office (Parts 1—99)

Title 5—Administrative Personnel

I Office of Personnel Management (Parts 1—1199)
II Merit Systems Protection Board (Parts 1200—1299)
III Office of Management and Budget (Parts 1300—1399)
V The International Organizations Employees Loyalty Board (Parts 1500—1599)
VI Federal Retirement Thrift Investment Board (Parts 1600—1699)
VIII Office of Special Counsel (Parts 1800—1899)
IX Appalachian Regional Commission (Parts 1900—1999)
XI Armed Forces Retirement Home (Parts 2100—2199)
XIV Federal Labor Relations Authority, General Counsel of the Federal Labor Relations Authority and Federal Service Impasses Panel (Parts 2400—2499)
XV Office of Administration, Executive Office of the President (Parts 2500—2599)
XVI Office of Government Ethics (Parts 2600—2699)
XXI Department of the Treasury (Parts 3100—3199)
XXII Federal Deposit Insurance Corporation (Parts 3200—3299)
XXIII Department of Energy (Parts 3300—3399)
XXIV Federal Energy Regulatory Commission (Parts 3400—3499)
XXV Department of the Interior (Parts 3500—3599)
XXVI Department of Defense (Parts 3600— 3699)
XXVIII Department of Justice (Parts 3800—3899)
XXIX Federal Communications Commission (Parts 3900—3999)
XXX Farm Credit System Insurance Corporation (Parts 4000—4099)
XXXI Farm Credit Administration (Parts 4100—4199)
XXXIII Overseas Private Investment Corporation (Parts 4300—4399)
XXXV Office of Personnel Management (Parts 4500—4599)
XL Interstate Commerce Commission (Parts 5000—5099)
XLI Commodity Futures Trading Commission (Parts 5100—5199)
XLII Department of Labor (Parts 5200—5299)
XLIII National Science Foundation (Parts 5300—5399)
XLV Department of Health and Human Services (Parts 5500—5599)
XLVI Postal Rate Commission (Parts 5600—5699)
XLVII Federal Trade Commission (Parts 5700—5799)
XLVIII Nuclear Regulatory Commission (Parts 5800—5899)
L Department of Transportation (Parts 6000—6099)
LII Export-Import Bank of the United States (Parts 6200—6299)
LIII Department of Education (Parts 6300—6399)

Title 5—Administrative Personnel—Continued

Chap.

LIV Environmental Protection Agency (Parts 6400—6499)

LV National Endowment for the Arts (Parts 6500—6599)

LVI National Endowment for the Humanities (Parts 6600—6699)

LVII General Services Administration (Parts 6700—6799)

LVIII Board of Governors of the Federal Reserve System (Parts 6800—6899)

LIX National Aeronautics and Space Administration (Parts 6900—6999)

LX United States Postal Service (Parts 7000—7099)

LXI National Labor Relations Board (Parts 7100—7199)

LXII Equal Employment Opportunity Commission (Parts 7200—7299)

LXIII Inter-American Foundation (Parts 7300—7399)

LXIV Merit Systems Protection Board (Parts 7400—7499)

LXV Department of Housing and Urban Development (Parts 7500—7599)

LXVI National Archives and Records Administration (Parts 7600—7699)

LXVII Institute of Museum and Library Services (Parts 7700—7799)

LXVIII Commission on Civil Rights (Parts 7800—7899)

LXIX Tennessee Valley Authority (Parts 7900—7999)

LXXI Consumer Product Safety Commission (Parts 8100—8199)

LXXIII Department of Agriculture (Parts 8300—8399)

LXXIV Federal Mine Safety and Health Review Commission (Parts 8400—8499)

LXXVI Federal Retirement Thrift Investment Board (Parts 8600—8699)

LXXVII Office of Management and Budget (Parts 8700—8799)

XCVII Department of Homeland Security Human Resources Management System (Department of Homeland Security—Office of Personnel Management) (Parts 9700—9799)

XCIX Department of Defense Human Resources Management and Labor Relations Systems (Department of Defense—Office of Personnel Management) (Parts 9900—9999)

Title 6—Domestic Security

I Department of Homeland Security, Office of the Secretary (Parts 0—99)

X Privacy and Civil Liberties Oversight Board (Parts 1000—1099)

Title 7—Agriculture

SUBTITLE A—OFFICE OF THE SECRETARY OF AGRICULTURE (PARTS 0—26)

SUBTITLE B—REGULATIONS OF THE DEPARTMENT OF AGRICULTURE

I Agricultural Marketing Service (Standards, Inspections, Marketing Practices), Department of Agriculture (Parts 27—209)

II Food and Nutrition Service, Department of Agriculture (Parts 210—299)

Title 7—Agriculture—Continued

Chap.	
III	Animal and Plant Health Inspection Service, Department of Agriculture (Parts 300—399)
IV	Federal Crop Insurance Corporation, Department of Agriculture (Parts 400—499)
V	Agricultural Research Service, Department of Agriculture (Parts 500—599)
VI	Natural Resources Conservation Service, Department of Agriculture (Parts 600—699)
VII	Farm Service Agency, Department of Agriculture (Parts 700—799)
VIII	Grain Inspection, Packers and Stockyards Administration (Federal Grain Inspection Service), Department of Agriculture (Parts 800—899)
IX	Agricultural Marketing Service (Marketing Agreements and Orders; Fruits, Vegetables, Nuts), Department of Agriculture (Parts 900—999)
X	Agricultural Marketing Service (Marketing Agreements and Orders; Milk), Department of Agriculture (Parts 1000—1199)
XI	Agricultural Marketing Service (Marketing Agreements and Orders; Miscellaneous Commodities), Department of Agriculture (Parts 1200—1299)
XIV	Commodity Credit Corporation, Department of Agriculture (Parts 1400—1499)
XV	Foreign Agricultural Service, Department of Agriculture (Parts 1500—1599)
XVI	Rural Telephone Bank, Department of Agriculture (Parts 1600—1699)
XVII	Rural Utilities Service, Department of Agriculture (Parts 1700—1799)
XVIII	Rural Housing Service, Rural Business-Cooperative Service, Rural Utilities Service, and Farm Service Agency, Department of Agriculture (Parts 1800—2099)
XX	Local Television Loan Guarantee Board (Parts 2200—2299)
XXVI	Office of Inspector General, Department of Agriculture (Parts 2600—2699)
XXVII	Office of Information Resources Management, Department of Agriculture (Parts 2700—2799)
XXVIII	Office of Operations, Department of Agriculture (Parts 2800—2899)
XXIX	Office of Energy Policy and New Uses, Department of Agriculture (Parts 2900—2999)
XXX	Office of the Chief Financial Officer, Department of Agriculture (Parts 3000—3099)
XXXI	Office of Environmental Quality, Department of Agriculture (Parts 3100—3199)
XXXII	Office of Procurement and Property Management, Department of Agriculture (Parts 3200—3299)
XXXIII	Office of Transportation, Department of Agriculture (Parts 3300—3399)
XXXIV	Cooperative State Research, Education, and Extension Service, Department of Agriculture (Parts 3400—3499)

Title 7—Agriculture—Continued

Chap.

XXXV Rural Housing Service, Department of Agriculture (Parts 3500—3599)

XXXVI National Agricultural Statistics Service, Department of Agriculture (Parts 3600—3699)

XXXVII Economic Research Service, Department of Agriculture (Parts 3700—3799)

XXXVIII World Agricultural Outlook Board, Department of Agriculture (Parts 3800—3899)

XLI [Reserved]

XLII Rural Business-Cooperative Service and Rural Utilities Service, Department of Agriculture (Parts 4200—4299)

Title 8—Aliens and Nationality

I Department of Homeland Security (Immigration and Naturalization) (Parts 1—499)

V Executive Office for Immigration Review, Department of Justice (Parts 1000—1399)

Title 9—Animals and Animal Products

I Animal and Plant Health Inspection Service, Department of Agriculture (Parts 1—199)

II Grain Inspection, Packers and Stockyards Administration (Packers and Stockyards Programs), Department of Agriculture (Parts 200—299)

III Food Safety and Inspection Service, Department of Agriculture (Parts 300—599)

Title 10—Energy

I Nuclear Regulatory Commission (Parts 0—199)

II Department of Energy (Parts 200—699)

III Department of Energy (Parts 700—999)

X Department of Energy (General Provisions) (Parts 1000—1099)

XIII Nuclear Waste Technical Review Board (Parts 1303—1399)

XVII Defense Nuclear Facilities Safety Board (Parts 1700—1799)

XVIII Northeast Interstate Low-Level Radioactive Waste Commission (Parts 1800—1899)

Title 11—Federal Elections

I Federal Election Commission (Parts 1—9099)

Title 12—Banks and Banking

I Comptroller of the Currency, Department of the Treasury (Parts 1—199)

II Federal Reserve System (Parts 200—299)

Title 12—Banks and Banking—Continued

Chap.

III Federal Deposit Insurance Corporation (Parts 300—399)

IV Export-Import Bank of the United States (Parts 400—499)

V Office of Thrift Supervision, Department of the Treasury (Parts 500—599)

VI Farm Credit Administration (Parts 600—699)

VII National Credit Union Administration (Parts 700—799)

VIII Federal Financing Bank (Parts 800—899)

IX Federal Housing Finance Board (Parts 900—999)

XI Federal Financial Institutions Examination Council (Parts 1100—1199)

XII Federal Housing Finance Agency (Parts 1200—1299)

XIV Farm Credit System Insurance Corporation (Parts 1400—1499)

XV Department of the Treasury (Parts 1500—1599)

XVII Office of Federal Housing Enterprise Oversight, Department of Housing and Urban Development (Parts 1700—1799)

XVIII Community Development Financial Institutions Fund, Department of the Treasury (Parts 1800—1899)

Title 13—Business Credit and Assistance

I Small Business Administration (Parts 1—199)

III Economic Development Administration, Department of Commerce (Parts 300—399)

IV Emergency Steel Guarantee Loan Board, Department of Commerce (Parts 400—499)

V Emergency Oil and Gas Guaranteed Loan Board, Department of Commerce (Parts 500—599)

Title 14—Aeronautics and Space

I Federal Aviation Administration, Department of Transportation (Parts 1—199)

II Office of the Secretary, Department of Transportation (Aviation Proceedings) (Parts 200—399)

III Commercial Space Transportation, Federal Aviation Administration, Department of Transportation (Parts 400—499)

V National Aeronautics and Space Administration (Parts 1200—1299)

VI Air Transportation System Stabilization (Parts 1300—1399)

Title 15—Commerce and Foreign Trade

SUBTITLE A—OFFICE OF THE SECRETARY OF COMMERCE (PARTS 0—29)

SUBTITLE B—REGULATIONS RELATING TO COMMERCE AND FOREIGN TRADE

I Bureau of the Census, Department of Commerce (Parts 30—199)

Title 15—Commerce and Foreign Trade—Continued

Chap.

II National Institute of Standards and Technology, Department of Commerce (Parts 200—299)

III International Trade Administration, Department of Commerce (Parts 300—399)

IV Foreign-Trade Zones Board, Department of Commerce (Parts 400—499)

VII Bureau of Industry and Security, Department of Commerce (Parts 700—799)

VIII Bureau of Economic Analysis, Department of Commerce (Parts 800—899)

IX National Oceanic and Atmospheric Administration, Department of Commerce (Parts 900—999)

XI Technology Administration, Department of Commerce (Parts 1100—1199)

XIII East-West Foreign Trade Board (Parts 1300—1399)

XIV Minority Business Development Agency (Parts 1400—1499)

SUBTITLE C—REGULATIONS RELATING TO FOREIGN TRADE AGREEMENTS

XX Office of the United States Trade Representative (Parts 2000—2099)

SUBTITLE D—REGULATIONS RELATING TO TELECOMMUNICATIONS AND INFORMATION

XXIII National Telecommunications and Information Administration, Department of Commerce (Parts 2300—2399)

Title 16—Commercial Practices

I Federal Trade Commission (Parts 0—999)

II Consumer Product Safety Commission (Parts 1000—1799)

Title 17—Commodity and Securities Exchanges

I Commodity Futures Trading Commission (Parts 1—199)

II Securities and Exchange Commission (Parts 200—399)

IV Department of the Treasury (Parts 400—499)

Title 18—Conservation of Power and Water Resources

I Federal Energy Regulatory Commission, Department of Energy (Parts 1—399)

III Delaware River Basin Commission (Parts 400—499)

VI Water Resources Council (Parts 700—799)

VIII Susquehanna River Basin Commission (Parts 800—899)

XIII Tennessee Valley Authority (Parts 1300—1399)

Title 19—Customs Duties

I Bureau of Customs and Border Protection, Department of Homeland Security; Department of the Treasury (Parts 0—199)

Title 19—Customs Duties—Continued

Chap.

II United States International Trade Commission (Parts 200—299)

III International Trade Administration, Department of Commerce (Parts 300—399)

IV Bureau of Immigration and Customs Enforcement, Department of Homeland Security (Parts 400—599)

Title 20—Employees' Benefits

I Office of Workers' Compensation Programs, Department of Labor (Parts 1—199)

II Railroad Retirement Board (Parts 200—399)

III Social Security Administration (Parts 400—499)

IV Employees Compensation Appeals Board, Department of Labor (Parts 500—599)

V Employment and Training Administration, Department of Labor (Parts 600—699)

VI Employment Standards Administration, Department of Labor (Parts 700—799)

VII Benefits Review Board, Department of Labor (Parts 800—899)

VIII Joint Board for the Enrollment of Actuaries (Parts 900—999)

IX Office of the Assistant Secretary for Veterans' Employment and Training Service, Department of Labor (Parts 1000—1099)

Title 21—Food and Drugs

I Food and Drug Administration, Department of Health and Human Services (Parts 1—1299)

II Drug Enforcement Administration, Department of Justice (Parts 1300—1399)

III Office of National Drug Control Policy (Parts 1400—1499)

Title 22—Foreign Relations

I Department of State (Parts 1—199)

II Agency for International Development (Parts 200—299)

III Peace Corps (Parts 300—399)

IV International Joint Commission, United States and Canada (Parts 400—499)

V Broadcasting Board of Governors (Parts 500—599)

VII Overseas Private Investment Corporation (Parts 700—799)

IX Foreign Service Grievance Board (Parts 900—999)

X Inter-American Foundation (Parts 1000—1099)

XI International Boundary and Water Commission, United States and Mexico, United States Section (Parts 1100—1199)

XII United States International Development Cooperation Agency (Parts 1200—1299)

XIII Millenium Challenge Corporation (Parts 1300—1399)

Title 22—Foreign Relations—Continued

Chap.

XIV Foreign Service Labor Relations Board; Federal Labor Relations Authority; General Counsel of the Federal Labor Relations Authority; and the Foreign Service Impasse Disputes Panel (Parts 1400—1499)

XV African Development Foundation (Parts 1500—1599)

XVI Japan-United States Friendship Commission (Parts 1600—1699)

XVII United States Institute of Peace (Parts 1700—1799)

Title 23—Highways

I Federal Highway Administration, Department of Transportation (Parts 1—999)

II National Highway Traffic Safety Administration and Federal Highway Administration, Department of Transportation (Parts 1200—1299)

III National Highway Traffic Safety Administration, Department of Transportation (Parts 1300—1399)

Title 24—Housing and Urban Development

SUBTITLE A—OFFICE OF THE SECRETARY, DEPARTMENT OF HOUSING AND URBAN DEVELOPMENT (PARTS 0—99)

SUBTITLE B—REGULATIONS RELATING TO HOUSING AND URBAN DEVELOPMENT

I Office of Assistant Secretary for Equal Opportunity, Department of Housing and Urban Development (Parts 100—199)

II Office of Assistant Secretary for Housing-Federal HousingCommissioner, Department of Housing and Urban Development (Parts 200—299)

III Government National Mortgage Association, Department of Housing and Urban Development (Parts 300—399)

IV Office of Housing and Office of Multifamily Housing Assistance Restructuring, Department of Housing and Urban Development (Parts 400—499)

V Office of Assistant Secretary for Community Planning and Development, Department of Housing and Urban Development (Parts 500—599)

VI Office of Assistant Secretary for Community Planning and Development, Department of Housing and Urban Development (Parts 600—699) [Reserved]

VII Office of the Secretary, Department of Housing and Urban Development (Housing Assistance Programs and Public and Indian Housing Programs) (Parts 700—799)

VIII Office of the Assistant Secretary for Housing—Federal Housing Commissioner, Department of Housing and Urban Development (Section 8 Housing Assistance Programs, Section 202 Direct Loan Program, Section 202 Supportive Housing for the Elderly Program and Section 811 Supportive Housing for Persons With Disabilities Program) (Parts 800—899)

IX Office of Assistant Secretary for Public and Indian Housing, Department of Housing and Urban Development (Parts 900—1699)

Title 24—Housing and Urban Development—Continued

Chap.

X Office of Assistant Secretary for Housing—Federal Housing Commissioner, Department of Housing and Urban Development (Interstate Land Sales Registration Program) (Parts 1700—1799)

XII Office of Inspector General, Department of Housing and Urban Development (Parts 2000—2099)

XX Office of Assistant Secretary for Housing—Federal Housing Commissioner, Department of Housing and Urban Development (Parts 3200—3899)

XXV Neighborhood Reinvestment Corporation (Parts 4100—4199)

Title 25—Indians

I Bureau of Indian Affairs, Department of the Interior (Parts 1—299)

II Indian Arts and Crafts Board, Department of the Interior (Parts 300—399)

III National Indian Gaming Commission, Department of the Interior (Parts 500—599)

IV Office of Navajo and Hopi Indian Relocation (Parts 700—799)

V Bureau of Indian Affairs, Department of the Interior, and Indian Health Service, Department of Health and Human Services (Part 900)

VI Office of the Assistant Secretary-Indian Affairs, Department of the Interior (Parts 1000—1199)

VII Office of the Special Trustee for American Indians, Department of the Interior (Parts 1200—1299)

Title 26—Internal Revenue

I Internal Revenue Service, Department of the Treasury (Parts 1—899)

Title 27—Alcohol, Tobacco Products and Firearms

I Alcohol and Tobacco Tax and Trade Bureau, Department of the Treasury (Parts 1—399)

II Bureau of Alcohol, Tobacco, Firearms, and Explosives, Department of Justice (Parts 400—699)

Title 28—Judicial Administration

I Department of Justice (Parts 0—299)

III Federal Prison Industries, Inc., Department of Justice (Parts 300—399)

V Bureau of Prisons, Department of Justice (Parts 500—599)

VI Offices of Independent Counsel, Department of Justice (Parts 600—699)

VII Office of Independent Counsel (Parts 700—799)

Title 28—Judicial Administration—Continued

Chap.

VIII Court Services and Offender Supervision Agency for the District of Columbia (Parts 800—899)

IX National Crime Prevention and Privacy Compact Council (Parts 900—999)

XI Department of Justice and Department of State (Parts 1100—1199)

Title 29—Labor

SUBTITLE A—OFFICE OF THE SECRETARY OF LABOR (PARTS 0—99)

SUBTITLE B—REGULATIONS RELATING TO LABOR

I National Labor Relations Board (Parts 100—199)

II Office of Labor-Management Standards, Department of Labor (Parts 200—299)

III National Railroad Adjustment Board (Parts 300—399)

IV Office of Labor-Management Standards, Department of Labor (Parts 400—499)

V Wage and Hour Division, Department of Labor (Parts 500—899)

IX Construction Industry Collective Bargaining Commission (Parts 900—999)

X National Mediation Board (Parts 1200—1299)

XII Federal Mediation and Conciliation Service (Parts 1400—1499)

XIV Equal Employment Opportunity Commission (Parts 1600—1699)

XVII Occupational Safety and Health Administration, Department of Labor (Parts 1900—1999)

XX Occupational Safety and Health Review Commission (Parts 2200—2499)

XXV Employee Benefits Security Administration, Department of Labor (Parts 2500—2599)

XXVII Federal Mine Safety and Health Review Commission (Parts 2700—2799)

XL Pension Benefit Guaranty Corporation (Parts 4000—4999)

Title 30—Mineral Resources

I Mine Safety and Health Administration, Department of Labor (Parts 1—199)

II Minerals Management Service, Department of the Interior (Parts 200—299)

III Board of Surface Mining and Reclamation Appeals, Department of the Interior (Parts 300—399)

IV Geological Survey, Department of the Interior (Parts 400—499)

VII Office of Surface Mining Reclamation and Enforcement, Department of the Interior (Parts 700—999)

Title 31—Money and Finance: Treasury

SUBTITLE A—OFFICE OF THE SECRETARY OF THE TREASURY (PARTS 0—50)

Title 31—Money and Finance: Treasury—Continued

Chap.

SUBTITLE B—REGULATIONS RELATING TO MONEY AND FINANCE

I Monetary Offices, Department of the Treasury (Parts 51—199)

II Fiscal Service, Department of the Treasury (Parts 200—399)

IV Secret Service, Department of the Treasury (Parts 400—499)

V Office of Foreign Assets Control, Department of the Treasury (Parts 500—599)

VI Bureau of Engraving and Printing, Department of the Treasury (Parts 600—699)

VII Federal Law Enforcement Training Center, Department of the Treasury (Parts 700—799)

VIII Office of International Investment, Department of the Treasury (Parts 800—899)

IX Federal Claims Collection Standards (Department of the Treasury—Department of Justice) (Parts 900—999)

Title 32—National Defense

SUBTITLE A—DEPARTMENT OF DEFENSE

I Office of the Secretary of Defense (Parts 1—399)

V Department of the Army (Parts 400—699)

VI Department of the Navy (Parts 700—799)

VII Department of the Air Force (Parts 800—1099)

SUBTITLE B—OTHER REGULATIONS RELATING TO NATIONAL DEFENSE

XII Defense Logistics Agency (Parts 1200—1299)

XVI Selective Service System (Parts 1600—1699)

XVII Office of the Director of National Intelligence (Parts 1700—1799)

XVIII National Counterintelligence Center (Parts 1800—1899)

XIX Central Intelligence Agency (Parts 1900—1999)

XX Information Security Oversight Office, National Archives and Records Administration (Parts 2000—2099)

XXI National Security Council (Parts 2100—2199)

XXIV Office of Science and Technology Policy (Parts 2400—2499)

XXVII Office for Micronesian Status Negotiations (Parts 2700—2799)

XXVIII Office of the Vice President of the United States (Parts 2800—2899)

Title 33—Navigation and Navigable Waters

I Coast Guard, Department of Homeland Security (Parts 1—199)

II Corps of Engineers, Department of the Army (Parts 200—399)

IV Saint Lawrence Seaway Development Corporation, Department of Transportation (Parts 400—499)

Title 34—Education

SUBTITLE A—OFFICE OF THE SECRETARY, DEPARTMENT OF EDUCATION (PARTS 1—99)

Title 34—Education—Continued

Chap.

SUBTITLE B—REGULATIONS OF THE OFFICES OF THE DEPARTMENT OF EDUCATION

I Office for Civil Rights, Department of Education (Parts 100—199)

II Office of Elementary and Secondary Education, Department of Education (Parts 200—299)

III Office of Special Education and Rehabilitative Services, Department of Education (Parts 300—399)

IV Office of Vocational and Adult Education, Department of Education (Parts 400—499)

V Office of Bilingual Education and Minority Languages Affairs, Department of Education (Parts 500—599)

VI Office of Postsecondary Education, Department of Education (Parts 600—699)

VII Office of Educational Research and Improvmeent, Department of Education [Reserved]

XI National Institute for Literacy (Parts 1100—1199)

SUBTITLE C—REGULATIONS RELATING TO EDUCATION

XII National Council on Disability (Parts 1200—1299)

Title 35 [Reserved]

Title 36—Parks, Forests, and Public Property

I National Park Service, Department of the Interior (Parts 1—199)

II Forest Service, Department of Agriculture (Parts 200—299)

III Corps of Engineers, Department of the Army (Parts 300—399)

IV American Battle Monuments Commission (Parts 400—499)

V Smithsonian Institution (Parts 500—599)

VI [Reserved]

VII Library of Congress (Parts 700—799)

VIII Advisory Council on Historic Preservation (Parts 800—899)

IX Pennsylvania Avenue Development Corporation (Parts 900—999)

X Presidio Trust (Parts 1000—1099)

XI Architectural and Transportation Barriers Compliance Board (Parts 1100—1199)

XII National Archives and Records Administration (Parts 1200—1299)

XV Oklahoma City National Memorial Trust (Parts 1500—1599)

XVI Morris K. Udall Scholarship and Excellence in National Environmental Policy Foundation (Parts 1600—1699)

Title 37—Patents, Trademarks, and Copyrights

I United States Patent and Trademark Office, Department of Commerce (Parts 1—199)

II Copyright Office, Library of Congress (Parts 200—299)

III Copyright Royalty Board, Library of Congress (Parts 301—399)

Title 37—Patents, Trademarks, and Copyrights—Continued

Chap.

IV Assistant Secretary for Technology Policy, Department of Commerce (Parts 400—499)

V Under Secretary for Technology, Department of Commerce (Parts 500—599)

Title 38—Pensions, Bonuses, and Veterans' Relief

I Department of Veterans Affairs (Parts 0—99)

Title 39—Postal Service

I United States Postal Service (Parts 1—999)

III Postal Regulatory Commission (Parts 3000—3099)

Title 40—Protection of Environment

I Environmental Protection Agency (Parts 1—1099)

IV Environmental Protection Agency and Department of Justice (Parts 1400—1499)

V Council on Environmental Quality (Parts 1500—1599)

VI Chemical Safety and Hazard Investigation Board (Parts 1600—1699)

VII Environmental Protection Agency and Department of Defense; Uniform National Discharge Standards for Vessels of the Armed Forces (Parts 1700—1799)

Title 41—Public Contracts and Property Management

SUBTITLE B—OTHER PROVISIONS RELATING TO PUBLIC CONTRACTS

50 Public Contracts, Department of Labor (Parts 50–1—50–999)

51 Committee for Purchase From People Who Are Blind or Severely Disabled (Parts 51–1—51–99)

60 Office of Federal Contract Compliance Programs, Equal Employment Opportunity, Department of Labor (Parts 60–1—60–999)

61 Office of the Assistant Secretary for Veterans' Employment and Training Service, Department of Labor (Parts 61–1—61–999)

Chapters 62—100 [Reserved]

SUBTITLE C—FEDERAL PROPERTY MANAGEMENT REGULATIONS SYSTEM

101 Federal Property Management Regulations (Parts 101–1—101–99)

102 Federal Management Regulation (Parts 102–1—102–299)

Chapters 103—104 [Reserved]

105 General Services Administration (Parts 105–1—105–999)

109 Department of Energy Property Management Regulations (Parts 109–1—109–99)

114 Department of the Interior (Parts 114–1—114–99)

115 Environmental Protection Agency (Parts 115–1—115–99)

128 Department of Justice (Parts 128–1—128–99)

Title 41—Public Contracts and Property Management—Continued

Chap.

Chapters 129—200 [Reserved]

SUBTITLE D—OTHER PROVISIONS RELATING TO PROPERTY MANAGEMENT [RESERVED]

SUBTITLE E—FEDERAL INFORMATION RESOURCES MANAGEMENT REGULATIONS SYSTEM [RESERVED]

SUBTITLE F—FEDERAL TRAVEL REGULATION SYSTEM

300 General (Parts 300–1—300–99)

301 Temporary Duty (TDY) Travel Allowances (Parts 301–1—301–99)

302 Relocation Allowances (Parts 302–1—302–99)

303 Payment of Expenses Connected with the Death of Certain Employees (Part 303–1—303–99)

304 Payment of Travel Expenses from a Non-Federal Source (Parts 304–1—304–99)

Title 42—Public Health

I Public Health Service, Department of Health and Human Services (Parts 1—199)

IV Centers for Medicare & Medicaid Services, Department of Health and Human Services (Parts 400—499)

V Office of Inspector General-Health Care, Department of Health and Human Services (Parts 1000—1999)

Title 43—Public Lands: Interior

SUBTITLE A—OFFICE OF THE SECRETARY OF THE INTERIOR (PARTS 1—199)

SUBTITLE B—REGULATIONS RELATING TO PUBLIC LANDS

I Bureau of Reclamation, Department of the Interior (Parts 200—499)

II Bureau of Land Management, Department of the Interior (Parts 1000—9999)

III Utah Reclamation Mitigation and Conservation Commission (Parts 10000—10010)

Title 44—Emergency Management and Assistance

I Federal Emergency Management Agency, Department of Homeland Security (Parts 0—399)

IV Department of Commerce and Department of Transportation (Parts 400—499)

Title 45—Public Welfare

SUBTITLE A—DEPARTMENT OF HEALTH AND HUMAN SERVICES (PARTS 1—199)

SUBTITLE B—REGULATIONS RELATING TO PUBLIC WELFARE

Title 45—Public Welfare—Continued

Chap.

II Office of Family Assistance (Assistance Programs), Administration for Children and Families, Department of Health and Human Services (Parts 200—299)

III Office of Child Support Enforcement (Child Support Enforcement Program), Administration for Children and Families, Department of Health and Human Services (Parts 300—399)

IV Office of Refugee Resettlement, Administration for Children and Families, Department of Health and Human Services (Parts 400—499)

V Foreign Claims Settlement Commission of the United States, Department of Justice (Parts 500—599)

VI National Science Foundation (Parts 600—699)

VII Commission on Civil Rights (Parts 700—799)

VIII Office of Personnel Management (Parts 800—899) [Reserved]

X Office of Community Services, Administration for Children and Families, Department of Health and Human Services (Parts 1000—1099)

XI National Foundation on the Arts and the Humanities (Parts 1100—1199)

XII Corporation for National and Community Service (Parts 1200—1299)

XIII Office of Human Development Services, Department of Health and Human Services (Parts 1300—1399)

XVI Legal Services Corporation (Parts 1600—1699)

XVII National Commission on Libraries and Information Science (Parts 1700—1799)

XVIII Harry S. Truman Scholarship Foundation (Parts 1800—1899)

XXI Commission on Fine Arts (Parts 2100—2199)

XXIII Arctic Research Commission (Part 2301)

XXIV James Madison Memorial Fellowship Foundation (Parts 2400—2499)

XXV Corporation for National and Community Service (Parts 2500—2599)

Title 46—Shipping

I Coast Guard, Department of Homeland Security (Parts 1—199)

II Maritime Administration, Department of Transportation (Parts 200—399)

III Coast Guard (Great Lakes Pilotage), Department of Homeland Security (Parts 400—499)

IV Federal Maritime Commission (Parts 500—599)

Title 47—Telecommunication

I Federal Communications Commission (Parts 0—199)

II Office of Science and Technology Policy and National Security Council (Parts 200—299)

Title 47—Telecommunication—Continued

Chap.

III National Telecommunications and Information Administration, Department of Commerce (Parts 300—399)

Title 48—Federal Acquisition Regulations System

1 Federal Acquisition Regulation (Parts 1—99)

2 Defense Acquisition Regulations System, Department of Defense (Parts 200—299)

3 Department of Health and Human Services (Parts 300—399)

4 Department of Agriculture (Parts 400—499)

5 General Services Administration (Parts 500—599)

6 Department of State (Parts 600—699)

7 Agency for International Development (Parts 700—799)

8 Department of Veterans Affairs (Parts 800—899)

9 Department of Energy (Parts 900—999)

10 Department of the Treasury (Parts 1000—1099)

12 Department of Transportation (Parts 1200—1299)

13 Department of Commerce (Parts 1300—1399)

14 Department of the Interior (Parts 1400—1499)

15 Environmental Protection Agency (Parts 1500—1599)

16 Office of Personnel Management, Federal Employees Health Benefits Acquisition Regulation (Parts 1600—1699)

17 Office of Personnel Management (Parts 1700—1799)

18 National Aeronautics and Space Administration (Parts 1800—1899)

19 Broadcasting Board of Governors (Parts 1900—1999)

20 Nuclear Regulatory Commission (Parts 2000—2099)

21 Office of Personnel Management, Federal Employees Group Life Insurance Federal Acquisition Regulation (Parts 2100—2199)

23 Social Security Administration (Parts 2300—2399)

24 Department of Housing and Urban Development (Parts 2400—2499)

25 National Science Foundation (Parts 2500—2599)

28 Department of Justice (Parts 2800—2899)

29 Department of Labor (Parts 2900—2999)

30 Department of Homeland Security, Homeland Security Acquisition Regulation (HSAR) (Parts 3000—3099)

34 Department of Education Acquisition Regulation (Parts 3400—3499)

51 Department of the Army Acquisition Regulations (Parts 5100—5199)

52 Department of the Navy Acquisition Regulations (Parts 5200—5299)

53 Department of the Air Force Federal Acquisition Regulation Supplement [Reserved]

54 Defense Logistics Agency, Department of Defense (Parts 5400—5499)

Chap.

57 African Development Foundation (Parts 5700—5799)

61 General Services Administration Board of Contract Appeals (Parts 6100—6199)

63 Department of Transportation Board of Contract Appeals (Parts 6300—6399)

99 Cost Accounting Standards Board, Office of Federal Procurement Policy, Office of Management and Budget (Parts 9900—9999)

Title 49—Transportation

SUBTITLE A—OFFICE OF THE SECRETARY OF TRANSPORTATION (PARTS 1—99)

SUBTITLE B—OTHER REGULATIONS RELATING TO TRANSPORTATION

I Pipeline and Hazardous Materials Safety Administration, Department of Transportation (Parts 100—199)

II Federal Railroad Administration, Department of Transportation (Parts 200—299)

III Federal Motor Carrier Safety Administration, Department of Transportation (Parts 300—399)

IV Coast Guard, Department of Homeland Security (Parts 400—499)

V National Highway Traffic Safety Administration, Department of Transportation (Parts 500—599)

VI Federal Transit Administration, Department of Transportation (Parts 600—699)

VII National Railroad Passenger Corporation (AMTRAK) (Parts 700—799)

VIII National Transportation Safety Board (Parts 800—999)

X Surface Transportation Board, Department of Transportation (Parts 1000—1399)

XI Research and Innovative Technology Administration, Department of Transportation [Reserved]

XII Transportation Security Administration, Department of Homeland Security (Parts 1500—1699)

Title 50—Wildlife and Fisheries

I United States Fish and Wildlife Service, Department of the Interior (Parts 1—199)

II National Marine Fisheries Service, National Oceanic and Atmospheric Administration, Department of Commerce (Parts 200—299)

III International Fishing and Related Activities (Parts 300—399)

IV Joint Regulations (United States Fish and Wildlife Service, Department of the Interior and National Marine Fisheries Service, National Oceanic and Atmospheric Administration, Department of Commerce); Endangered Species Committee Regulations (Parts 400—499)

V Marine Mammal Commission (Parts 500—599)

Title 50—Wildlife and Fisheries—Continued

Chap.

VI Fishery Conservation and Management, National Oceanic and Atmospheric Administration, Department of Commerce (Parts 600—699)

CFR Index and Finding Aids

Subject/Agency Index

List of Agency Prepared Indexes

Parallel Tables of Statutory Authorities and Rules

List of CFR Titles, Chapters, Subchapters, and Parts

Alphabetical List of Agencies Appearing in the CFR

Alphabetical List of Agencies Appearing in the CFR

(Revised as of October 1, 2008)

Agency	CFR Title, Subtitle or Chapter
Administrative Committee of the Federal Register	1, I
Advanced Research Projects Agency	32, I
Advisory Council on Historic Preservation	36, VIII
African Development Foundation	22, XV
Federal Acquisition Regulation	48, 57
Agency for International Development	22, II
Federal Acquisition Regulation	48, 7
Agricultural Marketing Service	7, I, IX, X, XI
Agricultural Research Service	7, V
Agriculture Department	5, LXXIII
Agricultural Marketing Service	7, I, IX, X, XI
Agricultural Research Service	7, V
Animal and Plant Health Inspection Service	7, III; 9, I
Chief Financial Officer, Office of	7, XXX
Commodity Credit Corporation	7, XIV
Cooperative State Research, Education, and Extension Service	7, XXXIV
Economic Research Service	7, XXXVII
Energy, Office of	2, IX; 7, XXIX
Environmental Quality, Office of	7, XXXI
Farm Service Agency	7, VII, XVIII
Federal Acquisition Regulation	48, 4
Federal Crop Insurance Corporation	7, IV
Food and Nutrition Service	7, II
Food Safety and Inspection Service	9, III
Foreign Agricultural Service	7, XV
Forest Service	36, II
Grain Inspection, Packers and Stockyards Administration	7, VIII; 9, II
Information Resources Management, Office of	7, XXVII
Inspector General, Office of	7, XXVI
National Agricultural Library	7, XLI
National Agricultural Statistics Service	7, XXXVI
Natural Resources Conservation Service	7, VI
Operations, Office of	7, XXVIII
Procurement and Property Management, Office of	7, XXXII
Rural Business-Cooperative Service	7, XVIII, XLII
Rural Development Administration	7, XLII
Rural Housing Service	7, XVIII, XXXV
Rural Telephone Bank	7, XVI
Rural Utilities Service	7, XVII, XVIII, XLII
Secretary of Agriculture, Office of	7, Subtitle A
Transportation, Office of	7, XXXIII
World Agricultural Outlook Board	7, XXXVIII
Air Force Department	32, VII
Federal Acquisition Regulation Supplement	48, 53
Air Transportation Stabilization Board	14, VI
Alcohol and Tobacco Tax and Trade Bureau	27, I
Alcohol, Tobacco, Firearms, and Explosives, Bureau of	27, II
AMTRAK	49, VII
American Battle Monuments Commission	36, IV
American Indians, Office of the Special Trustee	25, VII
Animal and Plant Health Inspection Service	7, III; 9, I
Appalachian Regional Commission	5, IX

Agency	CFR Title, Subtitle or Chapter
Architectural and Transportation Barriers Compliance Board	36, XI
Arctic Research Commission	45, XXIII
Armed Forces Retirement Home	5, XI
Army Department	32, V
Engineers, Corps of	33, II; 36, III
Federal Acquisition Regulation	48, 51
Benefits Review Board	20, VII
Bilingual Education and Minority Languages Affairs, Office of	34, V
Blind or Severely Disabled, Committee for Purchase From People Who Are	41, 51
Broadcasting Board of Governors	22, V
Federal Acquisition Regulation	48, 19
Census Bureau	15, I
Centers for Medicare & Medicaid Services	42, IV
Central Intelligence Agency	32, XIX
Chief Financial Officer, Office of	7, XXX
Child Support Enforcement, Office of	45, III
Children and Families, Administration for	45, II, III, IV, X
Civil Rights, Commission on	5, LXVIII; 45, VII
Civil Rights, Office for	34, I
Coast Guard	33, I; 46, I; 49, IV
Coast Guard (Great Lakes Pilotage)	46, III
Commerce Department	44, IV
Census Bureau	15, I
Economic Affairs, Under Secretary	37, V
Economic Analysis, Bureau of	15, VIII
Economic Development Administration	13, III
Emergency Management and Assistance	44, IV
Federal Acquisition Regulation	48, 13
Fishery Conservation and Management	50, VI
Foreign-Trade Zones Board	15, IV
Industry and Security, Bureau of	15, VII
International Trade Administration	15, III; 19, III
National Institute of Standards and Technology	15, II
National Marine Fisheries Service	50, II, IV, VI
National Oceanic and Atmospheric Administration	15, IX; 50, II, III, IV, VI
National Telecommunications and Information Administration	15, XXIII; 47, III
National Weather Service	15, IX
Patent and Trademark Office, United States	37, I
Productivity, Technology and Innovation, Assistant Secretary for	37, IV
Secretary of Commerce, Office of	15, Subtitle A
Technology, Under Secretary for	37, V
Technology Administration	15, XI
Technology Policy, Assistant Secretary for	37, IV
Commercial Space Transportation	14, III
Commodity Credit Corporation	7, XIV
Commodity Futures Trading Commission	5, XLI; 17, I
Community Planning and Development, Office of Assistant Secretary for	24, V, VI
Community Services, Office of	45, X
Comptroller of the Currency	12, I
Construction Industry Collective Bargaining Commission	29, IX
Consumer Product Safety Commission	5, LXXI; 16, II
Cooperative State Research, Education, and Extension Service	7, XXXIV
Copyright Office	37, II
Copyright Royalty Board	37, III
Corporation for National and Community Service	2, XXII; 45, XII, XXV
Cost Accounting Standards Board	48, 99
Council on Environmental Quality	40, V
Court Services and Offender Supervision Agency for the District of Columbia	28, VIII
Customs and Border Protection Bureau	19, I
Defense Contract Audit Agency	32, I
Defense Department	5, XXVI; 32, Subtitle A; 40, VII

Agency	CFR Title, Subtitle or Chapter
Advanced Research Projects Agency	32, I
Air Force Department	32, VII
Army Department	32, V; 33, II; 36, III, 48, 51
Defense Acquisition Regulations System	48, 2
Defense Intelligence Agency	32, I
Defense Logistics Agency	32, I, XII; 48, 54
Engineers, Corps of	33, II; 36, III
National Imagery and Mapping Agency	32, I
Navy Department	32, VI; 48, 52
Secretary of Defense, Office of	2, XI; 32, I
Defense Contract Audit Agency	32, I
Defense Intelligence Agency	32, I
Defense Logistics Agency	32, XII; 48, 54
Defense Nuclear Facilities Safety Board	10, XVII
Delaware River Basin Commission	18, III
District of Columbia, Court Services and Offender Supervision Agency for the	28, VIII
Drug Enforcement Administration	21, II
East-West Foreign Trade Board	15, XIII
Economic Affairs, Under Secretary	37, V
Economic Analysis, Bureau of	15, VIII
Economic Development Administration	13, III
Economic Research Service	7, XXXVII
Education, Department of	5, LIII
Bilingual Education and Minority Languages Affairs, Office of	34, V
Civil Rights, Office for	34, I
Educational Research and Improvement, Office of	34, VII
Elementary and Secondary Education, Office of	34, II
Federal Acquisition Regulation	48, 34
Postsecondary Education, Office of	34, VI
Secretary of Education, Office of	34, Subtitle A
Special Education and Rehabilitative Services, Office of	34, III
Vocational and Adult Education, Office of	34, IV
Educational Research and Improvement, Office of	34, VII
Elementary and Secondary Education, Office of	34, II
Emergency Oil and Gas Guaranteed Loan Board	13, V
Emergency Steel Guarantee Loan Board	13, IV
Employee Benefits Security Administration	29, XXV
Employees' Compensation Appeals Board	20, IV
Employees Loyalty Board	5, V
Employment and Training Administration	20, V
Employment Standards Administration	20, VI
Endangered Species Committee	50, IV
Energy, Department of	5, XXIII; 10, II, III, X
Federal Acquisition Regulation	48, 9
Federal Energy Regulatory Commission	5, XXIV; 18, I
Property Management Regulations	41, 109
Energy, Office of	7, XXIX
Engineers, Corps of	33, II; 36, III
Engraving and Printing, Bureau of	31, VI
Environmental Protection Agency	2, XV; 5, LIV; 40, I, IV, VII
Federal Acquisition Regulation	48, 15
Property Management Regulations	41, 115
Environmental Quality, Office of	7, XXXI
Equal Employment Opportunity Commission	5, LXII; 29, XIV
Equal Opportunity, Office of Assistant Secretary for	24, I
Executive Office of the President	3, I
Administration, Office of	5, XV
Environmental Quality, Council on	40, V
Management and Budget, Office of	5, III, LXXVII; 14, VI; 48, 99
National Drug Control Policy, Office of	21, III
National Security Council	32, XXI; 47, 2
Presidential Documents	3

Agency	CFR Title, Subtitle or Chapter
Science and Technology Policy, Office of	32, XXIV; 47, II
Trade Representative, Office of the United States	15, XX
Export-Import Bank of the United States	2, XXXV; 5, LII; 12, IV
Family Assistance, Office of	45, II
Farm Credit Administration	5, XXXI; 12, VI
Farm Credit System Insurance Corporation	5, XXX; 12, XIV
Farm Service Agency	7, VII, XVIII
Federal Acquisition Regulation	48, 1
Federal Aviation Administration	14, I
Commercial Space Transportation	14, III
Federal Claims Collection Standards	31, IX
Federal Communications Commission	5, XXIX; 47, I
Federal Contract Compliance Programs, Office of	41, 60
Federal Crop Insurance Corporation	7, IV
Federal Deposit Insurance Corporation	5, XXII; 12, III
Federal Election Commission	11, I
Federal Emergency Management Agency	44, I
Federal Employees Group Life Insurance Federal Acquisition Regulation	48, 21
Federal Employees Health Benefits Acquisition Regulation	48, 16
Federal Energy Regulatory Commission	5, XXIV; 18, I
Federal Financial Institutions Examination Council	12, XI
Federal Financing Bank	12, VIII
Federal Highway Administration	23, I, II
Federal Home Loan Mortgage Corporation	1, IV
Federal Housing Enterprise Oversight Office	12, XVII
Federal Housing Finance Agency	12, XII
Federal Housing Finance Board	12, IX
Federal Labor Relations Authority, and General Counsel of the Federal Labor Relations Authority	5, XIV; 22, XIV
Federal Law Enforcement Training Center	31, VII
Federal Management Regulation	41, 102
Federal Maritime Commission	46, IV
Federal Mediation and Conciliation Service	29, XII
Federal Mine Safety and Health Review Commission	5, LXXIV; 29, XXVII
Federal Motor Carrier Safety Administration	49, III
Federal Prison Industries, Inc.	28, III
Federal Procurement Policy Office	48, 99
Federal Property Management Regulations	41, 101
Federal Railroad Administration	49, II
Federal Register, Administrative Committee of	1, I
Federal Register, Office of	1, II
Federal Reserve System	12, II
Board of Governors	5, LVIII
Federal Retirement Thrift Investment Board	5, VI, LXXVI
Federal Service Impasses Panel	5, XIV
Federal Trade Commission	5, XLVII; 16, I
Federal Transit Administration	49, VI
Federal Travel Regulation System	41, Subtitle F
Fine Arts, Commission on	45, XXI
Fiscal Service	31, II
Fish and Wildlife Service, United States	50, I, IV
Fishery Conservation and Management	50, VI
Food and Drug Administration	21, I
Food and Nutrition Service	7, II
Food Safety and Inspection Service	9, III
Foreign Agricultural Service	7, XV
Foreign Assets Control, Office of	31, V
Foreign Claims Settlement Commission of the United States	45, V
Foreign Service Grievance Board	22, IX
Foreign Service Impasse Disputes Panel	22, XIV
Foreign Service Labor Relations Board	22, XIV
Foreign-Trade Zones Board	15, IV
Forest Service	36, II
General Services Administration	5, LVII; 41, 105
Contract Appeals, Board of	48, 61
Federal Acquisition Regulation	48, 5

Agency	CFR Title, Subtitle or Chapter
Federal Management Regulation	41, 102
Federal Property Management Regulations	41, 101
Federal Travel Regulation System	41, Subtitle F
General	41, 300
Payment From a Non-Federal Source for Travel Expenses	41, 304
Payment of Expenses Connected With the Death of Certain Employees	41, 303
Relocation Allowances	41, 302
Temporary Duty (TDY) Travel Allowances	41, 301
Geological Survey	30, IV
Government Accountability Office	4, I
Government Ethics, Office of	5, XVI
Government National Mortgage Association	24, III
Grain Inspection, Packers and Stockyards Administration	7, VIII; 9, II
Harry S. Truman Scholarship Foundation	45, XVIII
Health and Human Services, Department of	2, III; 5, XLV; 45, Subtitle A,
Centers for Medicare & Medicaid Services	42, IV
Child Support Enforcement, Office of	45, III
Children and Families, Administration for	45, II, III, IV, X
Community Services, Office of	45, X
Family Assistance, Office of	45, II
Federal Acquisition Regulation	48, 3
Food and Drug Administration	21, I
Human Development Services, Office of	45, XIII
Indian Health Service	25, V
Inspector General (Health Care), Office of	42, V
Public Health Service	42, I
Refugee Resettlement, Office of	45, IV
Homeland Security, Department of	6, I
Coast Guard	33, I; 46, I; 49, IV
Coast Guard (Great Lakes Pilotage)	46, III
Customs and Border Protection Bureau	19, I
Federal Emergency Management Agency	44, I
Immigration and Customs Enforcement Bureau	19, IV
Immigration and Naturalization	8, I
Transportation Security Administration	49, XII
Housing and Urban Development, Department of	2, XXIV; 5, LXV; 24, Subtitle B
Community Planning and Development, Office of Assistant Secretary for	24, V, VI
Equal Opportunity, Office of Assistant Secretary for	24, I
Federal Acquisition Regulation	48, 24
Federal Housing Enterprise Oversight, Office of	12, XVII
Government National Mortgage Association	24, III
Housing—Federal Housing Commissioner, Office of Assistant Secretary for	24, II, VIII, X, XX
Housing, Office of, and Multifamily Housing Assistance Restructuring, Office of	24, IV
Inspector General, Office of	24, XII
Public and Indian Housing, Office of Assistant Secretary for	24, IX
Secretary, Office of	24, Subtitle A, VII
Housing—Federal Housing Commissioner, Office of Assistant Secretary for	24, II, VIII, X, XX
Housing, Office of, and Multifamily Housing Assistance Restructuring, Office of	24, IV
Human Development Services, Office of	45, XIII
Immigration and Customs Enforcement Bureau	19, IV
Immigration and Naturalization	8, I
Immigration Review, Executive Office for	8, V
Independent Counsel, Office of	28, VII
Indian Affairs, Bureau of	25, I, V
Indian Affairs, Office of the Assistant Secretary	25, VI
Indian Arts and Crafts Board	25, II
Indian Health Service	25, V
Industry and Security, Bureau of	15, VII
Information Resources Management, Office of	7, XXVII

Agency	CFR Title, Subtitle or Chapter
Information Security Oversight Office, National Archives and Records Administration	32, XX
Inspector General	
Agriculture Department	7, XXVI
Health and Human Services Department	42, V
Housing and Urban Development Department	24, XII
Institute of Peace, United States	22, XVII
Inter-American Foundation	5, LXIII; 22, X
Interior Department	
American Indians, Office of the Special Trustee	25, VII
Endangered Species Committee	50, IV
Federal Acquisition Regulation	48, 14
Federal Property Management Regulations System	41, 114
Fish and Wildlife Service, United States	50, I, IV
Geological Survey	30, IV
Indian Affairs, Bureau of	25, I, V
Indian Affairs, Office of the Assistant Secretary	25, VI
Indian Arts and Crafts Board	25, II
Land Management, Bureau of	43, II
Minerals Management Service	30, II
National Indian Gaming Commission	25, III
National Park Service	36, I
Reclamation, Bureau of	43, I
Secretary of the Interior, Office of	2, XIV; 43, Subtitle A
Surface Mining and Reclamation Appeals, Board of	30, III
Surface Mining Reclamation and Enforcement, Office of	30, VII
Internal Revenue Service	26, I
International Boundary and Water Commission, United States and Mexico, United States Section	22, XI
International Development, United States Agency for	22, II
Federal Acquisition Regulation	48, 7
International Development Cooperation Agency, United States	22, XII
International Fishing and Related Activities	50, III
International Investment, Office of	31, VIII
International Joint Commission, United States and Canada	22, IV
International Organizations Employees Loyalty Board	5, V
International Trade Administration	15, III; 19, III
International Trade Commission, United States	19, II
Interstate Commerce Commission	5, XL
James Madison Memorial Fellowship Foundation	45, XXIV
Japan–United States Friendship Commission	22, XVI
Joint Board for the Enrollment of Actuaries	20, VIII
Justice Department	2, XXVII; 5, XXVIII; 28, I, XI; 40, IV
Alcohol, Tobacco, Firearms, and Explosives, Bureau of	27, II
Drug Enforcement Administration	21, II
Federal Acquisition Regulation	48, 28
Federal Claims Collection Standards	31, IX
Federal Prison Industries, Inc.	28, III
Foreign Claims Settlement Commission of the United States	45, V
Immigration Review, Executive Office for	8, V
Offices of Independent Counsel	28, VI
Prisons, Bureau of	28, V
Property Management Regulations	41, 128
Labor Department	5, XLII
Benefits Review Board	20, VII
Employee Benefits Security Administration	29, XXV
Employees' Compensation Appeals Board	20, IV
Employment and Training Administration	20, V
Employment Standards Administration	20, VI
Federal Acquisition Regulation	48, 29
Federal Contract Compliance Programs, Office of	41, 60
Federal Procurement Regulations System	41, 50
Labor-Management Standards, Office of	29, II, IV
Mine Safety and Health Administration	30, I

Agency	CFR Title, Subtitle or Chapter
Occupational Safety and Health Administration	29, XVII
Public Contracts	41, 50
Secretary of Labor, Office of	29, Subtitle A
Veterans' Employment and Training Service, Office of the Assistant Secretary for	41, 61; 20, IX
Wage and Hour Division	29, V
Workers' Compensation Programs, Office of	20, I
Labor-Management Standards, Office of	29, II, IV
Land Management, Bureau of	43, II
Legal Services Corporation	45, XVI
Library of Congress	36, VII
Copyright Office	37, II
Copyright Royalty Board	37, III
Local Television Loan Guarantee Board	7, XX
Management and Budget, Office of	5, III, LXXVII; 14, VI; 48, 99
Marine Mammal Commission	50, V
Maritime Administration	46, II
Merit Systems Protection Board	5, II, LXIV
Micronesian Status Negotiations, Office for	32, XXVII
Millenium Challenge Corporation	22, XIII
Mine Safety and Health Administration	30, I
Minerals Management Service	30, II
Minority Business Development Agency	15, XIV
Miscellaneous Agencies	1, IV
Monetary Offices	31, I
Morris K. Udall Scholarship and Excellence in National Environmental Policy Foundation	36, XVI
National Aeronautics and Space Administration	2, XVIII; 5, LIX; 14, V
Federal Acquisition Regulation	48, 18
National Agricultural Library	7, XLI
National Agricultural Statistics Service	7, XXXVI
National and Community Service, Corporation for	45, XII, XXV
National Archives and Records Administration	2, XXVI; 5, LXVI; 36, XII
Information Security Oversight Office	32, XX
National Capital Planning Commission	1, IV
National Commission for Employment Policy	1, IV
National Commission on Libraries and Information Science	45, XVII
National Council on Disability	34, XII
National Counterintelligence Center	32, XVIII
National Credit Union Administration	12, VII
National Crime Prevention and Privacy Compact Council	28, IX
National Drug Control Policy, Office of	21, III
National Endowment for the Arts	2, XXXII
National Endowment for the Humanities	2, XXXIII
National Foundation on the Arts and the Humanities	45, XI
National Highway Traffic Safety Administration	23, II, III; 49, V
National Imagery and Mapping Agency	32, I
National Indian Gaming Commission	25, III
National Institute for Literacy	34, XI
National Institute of Standards and Technology	15, II
National Intelligence, Office of Director of	32, XVII
National Labor Relations Board	5, LXI; 29, I
National Marine Fisheries Service	50, II, IV, VI
National Mediation Board	29, X
National Oceanic and Atmospheric Administration	15, IX; 50, II, III, IV, VI
National Park Service	36, I
National Railroad Adjustment Board	29, III
National Railroad Passenger Corporation (AMTRAK)	49, VII
National Science Foundation	2, XXV; 5, XLIII; 45, VI
Federal Acquisition Regulation	48, 25
National Security Council	32, XXI
National Security Council and Office of Science and Technology Policy	47, II
National Telecommunications and Information Administration	15, XXIII; 47, III

Agency	CFR Title, Subtitle or Chapter
National Transportation Safety Board	49, VIII
Natural Resources Conservation Service	7, VI
Navajo and Hopi Indian Relocation, Office of	25, IV
Navy Department	32, VI
Federal Acquisition Regulation	48, 52
Neighborhood Reinvestment Corporation	24, XXV
Northeast Interstate Low-Level Radioactive Waste Commission	10, XVIII
Nuclear Regulatory Commission	5, XLVIII; 10, I
Federal Acquisition Regulation	48, 20
Occupational Safety and Health Administration	29, XVII
Occupational Safety and Health Review Commission	29, XX
Offices of Independent Counsel	28, VI
Oklahoma City National Memorial Trust	36, XV
Operations Office	7, XXVIII
Overseas Private Investment Corporation	5, XXXIII; 22, VII
Patent and Trademark Office, United States	37, I
Payment From a Non-Federal Source for Travel Expenses	41, 304
Payment of Expenses Connected With the Death of Certain Employees	41, 303
Peace Corps	22, III
Pennsylvania Avenue Development Corporation	36, IX
Pension Benefit Guaranty Corporation	29, XL
Personnel Management, Office of	5, I, XXXV; 45, VIII
Federal Acquisition Regulation	48, 17
Federal Employees Group Life Insurance Federal Acquisition Regulation	48, 21
Federal Employees Health Benefits Acquisition Regulation	48, 16
Pipeline and Hazardous Materials Safety Administration	49, I
Postal Regulatory Commission	5, XLVI; 39, III
Postal Service, United States	5, LX; 39, I
Postsecondary Education, Office of	34, VI
President's Commission on White House Fellowships	1, IV
Presidential Documents	3
Presidio Trust	36, X
Prisons, Bureau of	28, V
Privacy and Civil Liberties Oversight Board	6, X
Procurement and Property Management, Office of	7, XXXII
Productivity, Technology and Innovation, Assistant Secretary	37, IV
Public Contracts, Department of Labor	41, 50
Public and Indian Housing, Office of Assistant Secretary for	24, IX
Public Health Service	42, I
Railroad Retirement Board	20, II
Reclamation, Bureau of	43, I
Refugee Resettlement, Office of	45, IV
Relocation Allowances	41, 302
Research and Innovative Technology Administration	49, XI
Rural Business-Cooperative Service	7, XVIII, XLII
Rural Development Administration	7, XLII
Rural Housing Service	7, XVIII, XXXV
Rural Telephone Bank	7, XVI
Rural Utilities Service	7, XVII, XVIII, XLII
Saint Lawrence Seaway Development Corporation	33, IV
Science and Technology Policy, Office of	32, XXIV
Science and Technology Policy, Office of, and National Security Council	47, II
Secret Service	31, IV
Securities and Exchange Commission	17, II
Selective Service System	32, XVI
Small Business Administration	2, XXVII; 13, I
Smithsonian Institution	36, V
Social Security Administration	2, XXIII; 20, III; 48, 23
Soldiers' and Airmen's Home, United States	5, XI
Special Counsel, Office of	5, VIII
Special Education and Rehabilitative Services, Office of	34, III
State Department	2, VI; 22, I; 28, XI

Agency	CFR Title, Subtitle or Chapter
Federal Acquisition Regulation	48, 6
Surface Mining and Reclamation Appeals, Board of	30, III
Surface Mining Reclamation and Enforcement, Office of	30, VII
Surface Transportation Board	49, X
Susquehanna River Basin Commission	18, VIII
Technology Administration	15, XI
Technology Policy, Assistant Secretary for	37, IV
Technology, Under Secretary for	37, V
Tennessee Valley Authority	5, LXIX; 18, XIII
Thrift Supervision Office, Department of the Treasury	12, V
Trade Representative, United States, Office of	15, XX
Transportation, Department of	2, XII; 5, L
Commercial Space Transportation	14, III
Contract Appeals, Board of	48, 63
Emergency Management and Assistance	44, IV
Federal Acquisition Regulation	48, 12
Federal Aviation Administration	14, I
Federal Highway Administration	23, I, II
Federal Motor Carrier Safety Administration	49, III
Federal Railroad Administration	49, II
Federal Transit Administration	49, VI
Maritime Administration	46, II
National Highway Traffic Safety Administration	23, II, III; 49, V
Pipeline and Hazardous Materials Safety Administration	49, I
Saint Lawrence Seaway Development Corporation	33, IV
Secretary of Transportation, Office of	14, II; 49, Subtitle A
Surface Transportation Board	49, X
Transportation Statistics Bureau	49, XI
Transportation, Office of	7, XXXIII
Transportation Security Administration	49, XII
Transportation Statistics Bureau	49, XI
Travel Allowances, Temporary Duty (TDY)	41, 301
Treasury Department	5, XXI; 12, XV; 17, IV; 31, IX
Alcohol and Tobacco Tax and Trade Bureau	27, I
Community Development Financial Institutions Fund	12, XVIII
Comptroller of the Currency	12, I
Customs and Border Protection Bureau	19, I
Engraving and Printing, Bureau of	31, VI
Federal Acquisition Regulation	48, 10
Federal Claims Collection Standards	31, IX
Federal Law Enforcement Training Center	31, VII
Fiscal Service	31, II
Foreign Assets Control, Office of	31, V
Internal Revenue Service	26, I
International Investment, Office of	31, VIII
Monetary Offices	31, I
Secret Service	31, IV
Secretary of the Treasury, Office of	31, Subtitle A
Thrift Supervision, Office of	12, V
Truman, Harry S. Scholarship Foundation	45, XVIII
United States and Canada, International Joint Commission	22, IV
United States and Mexico, International Boundary and Water Commission, United States Section	22, XI
Utah Reclamation Mitigation and Conservation Commission	43, III
Veterans Affairs Department	2, VIII; 38, I
Federal Acquisition Regulation	48, 8
Veterans' Employment and Training Service, Office of the Assistant Secretary for	41, 61; 20, IX
Vice President of the United States, Office of	32, XXVIII
Vocational and Adult Education, Office of	34, IV
Wage and Hour Division	29, V
Water Resources Council	18, VI
Workers' Compensation Programs, Office of	20, I
World Agricultural Outlook Board	7, XXXVIII

List of CFR Sections Affected

All changes in this volume of the Code of Federal Regulations that were made by documents published in the FEDERAL REGISTER since January 1, 2001, are enumerated in the following list. Entries indicate the nature of the changes effected. Page numbers refer to FEDERAL REGISTER pages. The user should consult the entries for chapters and parts as well as sections for revisions.

For the period before January 1, 2001, see the ''List of CFR Sections Affected, 1949–1963, 1964–1972, 1973–1985, and 1986–2000'' published in eleven separate volumes.

2001

49 CFR

66 FR Page

Chapter II

213.110 Added 1899
(j)(1) and (m) introductory text correctly added 8372
Regulations at 66 FR 1899 and 8372 eff. date delayed 9676
219 Policy statement 41955
Revised 41973
225.19 (c) amended; (e) revised 66348
225 Appendix B revised 66348
229 Authority citation revised 4192
229.5 (p) added 4192
Regulation at 66 FR 4192 eff. date delayed 9906
229.25 (a) revised 4192
Regulation at 66 FR 4192 eff. date delayed 9906
229.27 (b) revised 4192
Regulation at 66 FR 4192 eff. date delayed 9906
229.53 Revised 4192
Regulation at 66 FR 4192 eff. date delayed 9906
231 Authority citation revised 4192
231.0 (b)(3), (4), (5) and (g) added 4192
Regulation at 66 FR 4192 eff. date delayed 9906
231.31 Added 4192
Regulation at 66 FR 4192 eff. date delayed 9906
231 Appendix A amended 4193
Regulation at 66 FR 4193 eff. date delayed 9906
232 Revised 4193

49 CFR—Continued

66 FR Page

Chapter II—Continued

Regulation at 66 FR 4193 eff. date delayed; Appendix B heading revised 9906
232.1 (b) and (d) amended 9906
232.303 (a)(1)(iv), (e) introductory text, (1) introductory text, (iv) and (f) introductory text revised 39687
232.305 Revised 39688
232.307 Revised 39688
232.309 Heading and (a) revised 39689
232.409 (c) amended 29502
232 Appendix A amended 39689
233.9 Regulation at 61 FR 33872 confirmed 49557
234.215 Revised 49560
234.247 (b) revised 49560
235.7 Regulation at 61 FR 33872 confirmed 49557
236.590 Regulation at 61 FR 33873 confirmed 49557
241 Added; interim 63959

2002

49 CFR

67 FR Page

Chapter II

214.7 Revised; interim 1906
214.103 Revised; interim 1906
214.105 Revised; interim 1906
(b)(14) corrected 11055, 30819
214.107 (a) and (b) revised; interim 1908
214.111 Revised; interim 1908
214.113 Revised; interim 1908
214.115 Revised; interim 1908

49 CFR—Continued

67 FR Page

Chapter II—Continued

214.117 Revised; interim 1908
(a) corrected 11055, 30819
214.302 Heading corrected 1908
216 Authority citation revised 19989
216.17 Revised 19989
216.23 Revised 19989
219 Policy statement 21
Technical correction 1116
225.19 (c) amended; (e) revised; interim 79536
225 Appendix B revised; interim 79536
229.5 Amended 16049
229.9 (g) added 16050
229.21 (a) and (b) amended 16050
229.137 Added 16050
229.139 Added 16050
229 Appendix B amended 16052
232.5 Amended 17580
232.15 (b)(1) and (g) revised 17580
232.17 (a), (b) introductory text, (2), (3), (d)(2) introductory text, (i), (g)(1) and (2) revised 17580
232.103 (p) removed; (n)(2), (3) and (o) revised 17581
232.109 (a), (g), (h) and (j)(2) revised 17581
232.203 (b)(6) and (8) revised; (e)(6) removed; (e)(7) through (9) redesignated as (e)(6) through (8) 17581
232.205 (f) removed; (b) through (e) redesignated as (c) through (f); (a) introductory text, (2)(i), new (c)(2) and (4) revised; new (b) added 17582
232.207 (b)(1) and (4) revised 17582
232.209 (a)(3), (b)(1) and (3) revised; (a)(4) added; (d) amended 17583
232.211 (d) added; (a)(4), (5) and (b)(1) revised 17583
232.213 (a)(6) and (7) amended 17583
232.215 (a)(3) revised 17583
232.217 (c) introductory text and (1) and (3) revised 17583
232.219 (c)(2) revised 17584
232.303 (a)(2) revised 17584
232.407 (g)(2) added 17584
232.409 (c) and (d) revised 17584
232 Appendices A and B amended 17584
238 Revised 19989
Authority citation revised 42909
238.1 (c) revised 19989
238.5 Amended 19989
238.15 (e)(2) revised 19990

49 CFR—Continued

67 FR Page

Chapter II—Continued

238.103 (a)(3) added; (c) heading, introductory text, (1), (2), (7), (8), (9), (d) heading, (1), (2)(i), (3)(i), (4) and (5) revised 42909
238.105 Revised 19990
238.109 (b)(6) revised 19990
238.113 (a)(3), (b) and (c) revised 19990
238.201 (a)(2) revised 19990
238.203 (h)(1) revised 19991
238.205 (b) revised 19991
238.211 (a)(1)(i) and (2) revised 19991
238.219 Revised 19991
238.223 Revised 19991
238.235 (a)(3) and (d) revised 19991
238.237 (d) introductory text and (1)(i) revised 19991
238.315 (c) and (f)(3) revised 19991
238.317 (d)(2) revised 19991
238.411 (b)(1) revised 19991
238.419 (a) revised 19992
238.421 (b) introductory text, (1), (2), (c) introductory text, (1) and (3)(ii) revised 19992
238.427 (b), (c) heading and (d) revised; (e) removed 19992
238.429 (f)(3) revised 19992
238.433 Revised 19993
238.435 (i) revised 19992
238.437 (a) revised 19993
238.439 (g) revised 19993
238.503 (f) revised 19994
238.603 (a)(3) and (b)(4) revised 19994
238 Appendix A amended 19994
Appendix B revised 42910
240.7 Amended; interim 24
241 Added 75960
244 Added 11604
244.13 (j) introductory text revised 68045
244.19 (c)(1) revised 68045

2003

49 CFR

68 FR Page

Chapter II

209 Appendix C added 24894
214.7 Amended 44407
214.501—214.533 (Subpart D) Added 44407
214 Appendix A amended 44411
219 Determination 57
219.5 Amended 10135
Amended 75463
219.601 (b)(2)(ii) revised; (b)(2)(iii) added 75463

49 CFR—Continued

68 FR Page

Chapter II—Continued
219.602 (c) and (d) revised 75463
219.607 (b)(1) revised 75464
219.608 (c) and (d) revised 75464
219.800 Added 75464
219.801 Removed 75464
219.803 Removed 75464
222 Added; interim 70664
225 Authority citation revised 10136
225.5 Amended 10136
225.9 Revised 10138
225.19 (d) revised 10138
225.21 (j) added 10138
225.23 (a) revised 10139
225.25 (b)(6), (16), (25)(v), (e)(8), (24) and (h)(15) revised; (b)(25)(xi), (xii) and (i) added 10139
225.33 (a)(11) added 10139
225.35 Amended 10139
225.39 Added 10139
229.129 Revised; interim 70686
229.125 (a) and (d)(2) revised; interim 49717
229 Appendix B amended; interim 70687
240 Authority citation revised 10139
240.117 (e)(2) revised 10139

2004

49 CFR

69 FR Page

Title 49 Nomenclature change 18803

Chapter II
209 Authority citation revised 30591, 30592
209.103 Amended 30591
209.105 (c) amended 30591
209.409 Amended 30592
209 Appendix B amended 30591
Appendix A amended 30592
213 Authority citation revised 30593
213.15 (a) amended 30593
213 Appendix A amended 30593
214 Authority citation revised 30593
214.5 Amended 30593
214.507 (a)(4) revised 8839
214.513 (a) revised 8839
214.517 (b) revised; (g) removed 8839
214.518 Revised 8839
214.521 Revised 8839
214 Appendix A amended 8839, 30593
215.7 Amended 30593
215 Appendix B amended 30593
216.7 Amended 30593
217 Authority citation revised 30593
217.5 Amended 30593
217 Appendix A amended 30593

49 CFR—Continued

69 FR Page

Chapter II—Continued
218 Authority citation revised 30593
218.9 Amended 30593
218 Appendix A amended 30593
219 Policy statement 72133
219.3 Revised 19286
219.4 Added 19286
219.5 Amended 19287
219.7 (d) and (e) added 19287
219.9 (a) amended 30593
219.11 (i) revised 19288
219.800 (a) revised 19288
219 Appendix A amended 30593
220.7 Amended 30593
220 Appendix C amended 30593
221 Authority citation revised 30593
221.7 Amended 30593
221 Appendix A amended 30593
Appendix C Footnote 1 amended 62818
222 Comment period extension 7169
Authority citation revised 30594
Regulation at 68 FR 70664 eff. date delayed to 4-1-05 67859
222.11 Amended; eff. 12–18–04 30594
222 Appendix C corrected; interim 1930
Appendix G amended; eff. 12–18–04 30594
223 Authority citation revised 30594
223.7 Amended 30594
223.207 (d)(3)(iii) revised 31037
223 Appendix B amended 30594
Figure 16 revised 31037
225.29 Amended 30594
225 Appendix A amended 30594
228 Authority citation revised 30594
228.21 Amended 30594
228 Appendixes A and B amended 30594
229 Comment period extension 7169
Authority citation revised 30594
229.7 (b) amended 30594
229.125 (a) and (d)(2) revised 12537
229.129 Regulation at 68 FR 70686 eff. date delayed to 4-1-05; interim 67859
229 Appendix B amended 30594
Regulation at 68 FR 70687 eff. date delayed to 4-1-05 67859
230 Authority citation revised 30594
230.4 Amended 30594
231 Authority citation revised 30594
231.0 (f) amended 30594
231 Appendix A amended 30594
232 Authority citation revised 29666, 30594

49 CFR—Continued

69 FR Page

Chapter II—Continued

232.11 (a) amended 30594
232 Appendix A revised 29666
Appendix A amended 30594
233 Authority citation revised 30595
233.11 Amended 30595
233 Appendix A amended 30595
234 Authority citation revised 30595
234.6 (a) amended 30595
234 Appendix A amended 30595
235 Authority citation revised 30595
235.9 Amended 30595
235 Appendix A amended 30595, 62818
236 Authority citation revised 30595
236.0 (f) amended 30595
236 Appendix A amended 30595
238.11 (a) amended 30595
238 Appendix A amended 30595
239 Authority citation revised 30595
239.11 Amended 30595
239 Appendix A amended 30595
240 Authority citation revised 30595
240.11 (a) amended 30595
240 Appendix A amended 30595
241 Authority citation revised 30595
241.15 (a) amended 30595
241 Appendix A amended 30595
244 Authority citation revised 30595
244.5 (a) amended 30595

2005

49 CFR

70 FR Page

Chapter II

209.11 (a) revised 11094
209.409 Amended 33381
Regulation at 70 FR 33381 withdrawn 38805
209 Appendix A amended 33381
Regulation at 70 FR 33381 withdrawn 38805
213.15 (a) amended 33381
Regulation at 70 FR 33381 withdrawn 38805
213.119 Introductory text, (g), (h) and (i) revised; (j) added; interim 66297
213.241 (b) revised 66298
213.343 (j) added; interim 66298
213 Appendix B amended; interim 66299
214.5 Amended 33381
Regulation at 70 FR 33381 withdrawn 38805
214.107 Revised; interim 7050
Regulation at 70 FR 7050 confirmed 43325

49 CFR—Continued

70 FR Page

Chapter II—Continued

215.7 Amended 33381
Regulation at 70 FR 33381 withdrawn 38805
216.7 Amended 33381
Regulation at 70 FR 33381 withdrawn 38805
217.5 Amended 33382
Regulation at 70 FR 33382 withdrawn 38805
218.9 Amended 33382
Regulation at 70 FR 33382 withdrawn 38805
219.9 (a) amended 33382
Regulation at 70 FR 33382 withdrawn 38805
219.800 (a) amended 57191
219 Appendix B revised 16966
220.7 Amended 33382
Regulation at 70 FR 33382 withdrawn 38805
221.7 Amended 33382
Regulation at 70 FR 33382 withdrawn 38805
222 Regulation at 68 FR 70664 eff. date delayed to 6–24–05; interim 13117
Regulation at 68 FR 70664 withdrawn 21884
Added 21888
222.11 Amended 33382
Regulation at 70 FR 33382 withdrawn 38805
223.7 Amended 33382
Regulation at 70 FR 33382 withdrawn 38805
224 Added 170
Stayed 30379
Revised 62176
225.19 (c) amended; (e) revised 75417
225.29 Amended 33382
Regulation at 70 FR 33382 withdrawn 38805
225 Appendix B revised 75417
228.21 Amended 33382
Regulation at 70 FR 33382 withdrawn 38805
228 Appendix A amended 33382
Regulation at 70 FR 33382 withdrawn 38805
229 Authority citation revised 37938
229.5 (a) through (p) designations removed; amended 21919
Revised 37938
229.7 (b) amended 33382
Regulation at 70 FR 33382 withdrawn 38805

49 CFR—Continued

70 FR Page

Chapter II—Continued
229.25 (e) revised 37939
229.27 Introductory text revised; (d) added 37940
229.129 Regulation at 68 FR 70686 eff. date delayed to 6–24–05; interim 13117
Regulation at 68 FR 70686 withdrawn 21884
Revised 21919
229.135 Revised 37940
229 Appendix B regulation at 68 FR 70687 eff. date delayed to 6–24–05 13117
Appendix B amended 21920
Regulation at 68 FR 70687 withdrawn 21884
Appendix B amended; Appendix D added 37942
230.4 (a) amended 33382
Regulation at 70 FR 33382 withdrawn 38805
230 Appendix C amended 41996
231.0 (f) amended 33382
Regulation at 70 FR 33382 withdrawn 38805
232.11 (a) amended 33382
Regulation at 70 FR 33382 withdrawn 38805
232 Appendix A amended 33382
Regulation at 70 FR 33382 withdrawn 38805
233.11 Amended 33383
Regulation at 70 FR 33383 withdrawn 38805
234.6 (a) amended 33383
Regulation at 70 FR 33383 withdrawn 38805
234.75 Undesignated center heading and section added 11094
234.275 Revised 72384
234 Appendix A amended 11094
235.9 Amended 33383
Regulation at 70 FR 33383 withdrawn 38805
236 Authority citation revised 11095
236.0 Heading, (a) and (b) revised; (g) and (h) added 11095
(f) amended 33383
Regulation at 70 FR 33383 withdrawn 38805
236.18 Added 11095
236.110 Revised 11095
236.787a Added 11095
236.901—236.929 (Subpart H) Added 11095
236.913 (c)(1) revised 72385

49 CFR—Continued

70 FR Page

Chapter II—Continued
236 Appendix A amended 11104
Appendix B added 11105
Appendix C added 11106
Appendixes D and E added 11107
238.11 (a) amended 33383
Regulation at 70 FR 33383 withdrawn 38805
239.11 Amended 33383
Regulation at 70 FR 33383 withdrawn 38805
240.11 (a) amended 33383
Regulation at 70 FR 33383 withdrawn 38805
241.15 (a) amended 33383
Regulation at 70 FR 33383 withdrawn 38805
244.5 (a) amended 33383
Regulation at 70 FR 33383 withdrawn 38805

2006

49 CFR

71 FR Page

Chapter II
209 Authority citation revised 77294
209.3 Amended 77294
209.103 Revised 77294
209.105 (c) amended 77295
209.109 (a) revised 77295
209.131 Revised 77295
209.133 Amended 77295
209 Appendices A and B amended 77295
211.45 Added; interim 51521
213.119 Introductory text and (g) through (j) revised 59691
219 Policy statement 1498
222 Revised 47634
227 Added 63123
229.4 (b) revised 63136
229.5 Amended ... 36911, 47666, 61857, 63136
229.31 (a) and (c) revised 61857
229.47 (b) revised 61857
229.121 Revised 63136
229.129 Revised 47666
229.137 (b)(1)(vi) revised 61857
229.141 (Subpart D) Heading revised 36911
229.141 (a)(6) and (b)(6) added 36912
229.201 Added 36912
229.203 Added 36912
229.205 Added 36912
229.206 Added 36912
229.207 Added 36912
229.209 Added 36913
229.211 Added 36913

49 CFR—Continued

71 FR Page

Chapter II—Continued

229.213 Added 36914
229.215 Added 36914
229.217 Added 36914
229 Appendix B amended 36914, 63136
Appendix E added 36915
Appendix B revised 47667
Appendix H added 63137
234 Authority citation correctly removed; CFR correction 19129
238.5 Amended 36916, 61857
238.17 (b) introductory text revised 61857
238.21 (a) and (c)(2) revised 61858
238.201 (a)(2) revised 36916
238.205 (b) amended 36916
238.229 Revised 61858
238.230 Added 61860
238.231 (b) and (h)(3) revised; (h)(4) added 61861
238.233 (f) amended 36917
238.303 (e)(17) added 61682
238.307 (c)(13) added; (d) revised 61862
238.313 (g)(3) amended; (j) added 61862
238.321 Added 61862
238 Appendix A amended 61863

2007

49 CFR

72 FR Page

Chapter II

209.409 Amended; eff. 10–9–07 51196
209 Appendix A amended; eff. 10–9–07 51196
211 Authority citation revised 10087
211.33 Added 10087
211.45 Regulation at 71 FR 51521 confirmed; revised 17438
213.15 (a) amended; eff. 10–9–07 51196
214.5 Amended; eff. 10–9–07 51196
215.7 Amended; eff. 10–9–07 51196
215 Appendix B amended; eff. 10–9–07 51196
216.7 Amended; eff. 10–9–07 51196
217.5 Amended; eff. 10–9–07 51196
218.9 Amended; eff. 10–9–07 51196
218 Appendix A amended; eff. 10–9–07 51196
219 Policy statement 1945, 74193
219.9 Amended; eff. 10–9–07 51196
220.7 Amended; eff. 10–9–07 51196
221.7 Amended; eff. 10–9–07 51197
222.11 Amended; eff. 10–9–07 51197
222 Regulation at 72 FR 44792 confirmed 59019

49 CFR—Continued

72 FR Page

Chapter II—Continued

222 Appendix D amended; eff. 10–9–07 44792
223.7 Amended; eff. 10–9–07 51197
224.11 Amended; eff. 10–9–07 51197
225.19 (c) amended; (e) revised 1186, 73661
225.29 Amended; eff. 10–9–07 51197
228.21 Amended; eff. 10–9–07 51197
228 Appendix A amended; eff. 10–9–07 51197
229.5 Amended 59223
229.7 (b) amended; eff. 10–9–07 51197
229.9 (a) introductory text revised 59223
229.131 Revised 59223
229 Appendix B amended; eff. 10–9–07 51197
230.4 (a) amended; eff. 10–9–07 51197
231.0 (f) amended; eff. 10–9–07 51197
232.11 (a) amended; eff. 10–9–07 51197
232 Appendix A amended; eff. 10–9–07 51197
233.11 Amended; eff. 10–9–07 51197
234.6 (a) amended; eff. 10–9–07 51197
235.9 Amended; eff. 10–9–07 51197
236.0 (f) amended; eff. 10–9–07 51198
238.11 (a) amended; eff. 10–9–07 51198
238 Appendix A amended; eff. 10–9–07 51198
240.11 (a) amended; eff. 10–9–07 51198
241.15 (a) amended; eff. 10–9–07 51198
244.5 (a) amended; eff. 10–9–07 51198

2008

(Regulations published from January 1, 2008, through October 1, 2008)

49 CFR

73 FR Page

Chapter II

217.2 Added 8495
217.4 Amended 8496
217.9 Revised 8496
(b) introductory text, (c)(1), (6) and (e) introductory text revised 33902
217.11 (c) revised 8497
217 Appendix A amended 8497
218.4 Added 8498
218.5 Amended 8498
218.37 (a)(1)(iii) and (iv) revised 8498
218.91—218.109 (Subpart F) Added 8498
218.93 Amended 33902

49 CFR—Continued

73 FR Page

Chapter II—Continued

218.95 (a) introductory text, (3) and (4) revised 33902
218.99 (e)(5) added 33902
218 Appendix A amended 8503
Appendix D added 8504
223 Authority citation revised 6399
223.5 Amended 6399
223.9 (c) revised; (d) removed 6399
223 Appendix B amended 6400
238.5 Amended 6400
238.17 (b) introductory text and (c) introductory text revised 6400
238.113 Revised 6401
238.114 Added 6401
238.121 Added 6402

49 CFR—Continued

73 FR Page

Chapter II—Continued

238.123 Added 6403
238.101—238.123 (Subpart B) Figures 1, 1a, 1b, 1c, 2, 2a, 2b and 3 added 6403
238.303 (e)(18) added 6412
238.305 (c) introductory text and (10) revised; (c)(11) and (12) added 6412
238.307 (c) introductory text, (5) and (d) revised 6412
238.437 Removed 6412
238.441 Revised 6412
238 Appendix A amended 6413
240 Interpretation 50883
262 Added 39886