AUTHENTICATED
U.S. GOVERNMENT
INFORMATION
GPO

# SUBCHAPTER O—POLLUTION

## PART 151—VESSELS CARRYING OIL, NOXIOUS LIQUID SUBSTANCES, GARBAGE, MUNICIPAL OR COMMERCIAL WASTE, AND BALLAST WATER

### Subpart A—Implementation of MARPOL 73/78 and the Protocol on Environmental Protection to the Antarctic Treaty as it Pertains to Pollution from Ships

GENERAL

Sec.
151.01 Purpose.
151.03 Applicability.
151.04 Penalties for violation.
151.05 Definitions.
151.06 Special areas.
151.07 Delegations.
151.08 Denial of entry.

OIL POLLUTION

151.09 Applicability.
151.10 Control of oil discharges.
151.11 Exceptions for emergencies.
151.13 Special areas for Annex I of MARPOL 73/78.
151.15 Reporting requirements.
151.17 Surveys.
151.19 International Oil Pollution Prevention (IOPP) Certificates.
151.21 Ships of countries not party to MARPOL 73/78.
151.23 Inspection for compliance and enforcement.
151.25 Oil Record Book.
151.26 Shipboard oil pollution emergency plans.
151.27 Plan submission and approval.
151.28 Plan review and revision.
151.29 Foreign ships.

NOXIOUS LIQUID SUBSTANCE POLLUTION

151.30 Applicability.
151.31 Where to find requirements applying to oceangoing ships carrying Category A, B, C, and D NLS.
151.32 Special areas for the purpose of Annex II.
151.33 Certificates needed to carry Category C Oil-like NLS.
151.35 Certificates needed to carry Category D NLS and Category D Oil-like NLS.
151.37 Obtaining an Attachment for NLSs to the IOPP Certificate and obtaining an NLS Certificate.
151.39 Operating requirements: Category D NLS.
151.41 Operating requirements for oceangoing ships with IOPP Certificates: Category C and D Oil-like NLSs.
151.43 Control of discharge of NLS residues.
151.47 Category D NLSs other than oil-like Category D NLSs that may be carried under this part.
151.49 Category C and D Oil-like NLSs allowed for carriage.

GARBAGE POLLUTION AND SEWAGE

151.51 Applicability.
151.53 Special areas for Annex V of MARPOL 73/78.
151.55 Recordkeeping requirements.
151.57 Waste management plans.
151.59 Placards.
151.61 Inspection for compliance and enforcement.
151.63 Shipboard control of garbage.
151.65 Reporting requirements.
151.66 Operating requirements: Discharge of garbage in the Great Lakes and other navigable waters.
151.67 Operating requirements: Discharge of plastic prohibited.
151.69 Operating requirements: Discharge of garbage outside special areas.
151.71 Operating requirements: Discharge of garbage within special areas.
151.73 Operating requirements: Discharge of garbage from fixed or floating platforms.
151.75 Grinders or comminuters.
151.77 Exceptions for emergencies.
APPENDIX A TO §§ 151.51 THROUGH 151.77—SUMMARY OF GARBAGE DISCHARGE RESTRICTIONS
151.79 Operating requirements: Discharge of sewage within Antarctica.

### Subpart B—Transportation of Municipal and Commercial Waste

151.1000 Purpose.
151.1003 Applicability.
151.1006 Definitions.
151.1009 Transportation of municipal or commercial waste.
151.1012 Applying for a conditional permit.
151.1015 Issuing or denying the issuance of a conditional permit.
151.1018 Withdrawal of a conditional permit.
151.1021 Appeals.
151.1024 Display of number.

### Subpart C—Ballast Water Management for Control of Nonindigenous Species in the Great Lakes and Hudson River

151.1500 Purpose.
151.1502 Applicability.
151.1504 Definitions.
151.1506 Restriction of operation.

151.1508 Revocation of clearance.
151.1510 Ballast water management.
151.1512 Vessel safety.
151.1514 Ballast water management alternatives under extraordinary conditions.
151.1516 Compliance monitoring.
151.1518 Penalties for failure to conduct ballast water management.

### Subpart D—Ballast Water Management for Control of Nonindigenous Species in waters of the United States

151.2000 What is the purpose of this subpart?
151.2005 To which vessels does this subpart apply?
151.2007 What are the penalties for violations of the mandatory provisions of this subpart?
151.2010 Which vessels are exempt from the mandatory requirements?
151.2015 Is a vessel in innocent passage exempt from the mandatory requirements?
151.2025 What definitions apply to this subpart?
151.2030 Who is responsible for determining when to use the safety exemption?
151.2035 What are the required ballast water management practices for my vessel?
151.2036 If my voyage does not take me into waters 200 nautical miles or greater from any shore, must I divert to conduct a ballast water exchange?
151.2037 If my vessel cannot conduct ballast water management practices because of its voyage and/or safety concerns, will I be prohibited from discharging ballast water?
151.2040 What are the mandatory ballast water management requirements for vessels equipped with ballast tanks that operate in the waters of the United States and are bound for ports or places in the United States?
151.2041 What are the mandatory ballast water reporting requirements for all vessels equipped with ballast tanks bound for ports or places of the United States?
151.2043 Equivalent Reporting Methods for vessels other than those entering the Great Lakes or Hudson River after operating outside the EEZ or Canadian equivalent.
151.2045 What are the mandatory recordkeeping requirements for vessels equipped with ballast tanks that are bound for a port or place in the United States?
151.2050 What methods are used to monitor compliance with this subpart?
151.2055 Where are the alternate exchange zones located? [Reserved]
151.2060 What must each application for approval of an alternative compliance technology contain? [Reserved]
151.2065 What is the standard of adequate compliance determined by the ANSTF for this subpart? [Reserved]
APPENDIX TO SUBPART D OF PART 151—BALLAST WATER REPORTING FORM AND INSTRUCTIONS FOR BALLAST WATER REPORTING FORM

### Subpart E—Definition of Marine Debris for the Purposes of the Marine Debris Research, Prevention, and Reduction Act

151.3000 Definition of marine debris for the purposes of the Marine Debris Research, Prevention, and Reduction Act.

AUTHORITY: 33 U.S.C. 1321, 1902, 1903, 1908; 46 U.S.C. 6101; Pub. L. 104–227 (110 Stat. 3034); Pub. L. 108–293 (118 Stat. 1063), § 623; E.O. 12777, 3 CFR, 1991 Comp. p. 351; DHS Delegation No. 0170.1, sec. 2(77).

## Subpart A—Implementation of MARPOL 73/78 and the Protocol on Environmental Protection to the Antarctic Treaty as it Pertains to Pollution from Ships

AUTHORITY: 33 U.S.C. 1321, 1903, 1908; 46 U.S.C. 6101; Pub. L. 104–227 (110 Stat. 3034); E.O. 12777, 3 CFR, 1991 Comp. p. 351; Department of Homeland Security Delegation No. 170.1.

SOURCE: CGD 75–124a, 48 FR 45709, Oct. 6, 1983, unless otherwise noted.

GENERAL

### § 151.01 Purpose.

The purpose of this subpart is to implement the Act to Prevent Pollution from Ships, 1980, as amended (33 U.S.C. 1901–1911) and Annexes I, II and V of the International Convention for the Prevention of Pollution from Ships, 1973, as modified by the Protocol of 1978 relating thereto (MARPOL 73/78), done at London on February 17, 1978. This subpart also implements the Antarctic Science, Tourism, and Conservation Act of 1996, and the Protocol on Environmental Protection to the Antarctic Treaty done at Madrid on October 4, 1991.

[CGD 88–002, 54 FR 18403, Apr. 28, 1989, as amended by CGD 88–002A, 55 FR 18582, May 2, 1990; CGD 97–015, 62 FR 18045, Apr. 14, 1997; USCG–2000–7641, 66 FR 55570, Nov. 2, 2001]

### § 151.03 Applicability.

This subpart applies to each ship that must comply with Annex I, II or V of MARPOL 73/78 unless otherwise indicated.

[CGD 88–002, 54 FR 18403, Apr. 28, 1989, as amended by CGD 88–002A, 55 FR 18582, May 2, 1990; CGD 97–015, 62 FR 18045, Apr. 14, 1997]

### § 151.04 Penalties for violation.

(a) A person who violates MARPOL 73/78, the Act, or the regulations of this subpart is liable for a civil penalty for each violation, as provided by 33 U.S.C. 1908(b)(1). Each day of a continuing violation constitutes a separate violation.

(b) A person who makes a false, fictitious statement or fraudulent representation in any matter in which a statement or representation is required to be made to the Coast Guard under MARPOL 73/78, the Act, or the regulations of this subpart, is liable for a civil penalty for each statement or representation, as provided by 33 U.S.C. 1908(b)(2).

(c) A person who knowingly violates MARPOL 73/78, the Act, or the regulations of this subpart commits a class D felony, as described in 18 U.S.C. 3551 *et seq*. In the discretion of the Court, an amount equal to not more than one-half of the fine may be paid to the person giving information leading to conviction.

(d) A ship operated in violation of MARPOL 73/78, the Act, or the regulations of this subpart is liable *in rem* for any civil penalty covered by paragraph (a) or (b) of this section, or any fine covered by paragraph (c) of this section, and may be proceeded against in the United States District Court of any district in which the ship may be found.

[CGD 88–002, 54 FR 18403, Apr. 28, 1989, as amended by CGD 88–002A, 55 FR 18582, May 2, 1990; CGD 92–007, 57 FR 33261, July 27, 1992; CGD 96–052, 62 FR 16703, Apr. 8, 1997; USCG–1999–5832, 64 FR 34714, June 29, 1999]

### § 151.05 Definitions.

As used in this subpart—

*Act* means the Act to Prevent Pollution from Ships, as amended (33 U.S.C. 1901–1911).

*Antarctica* means the area south of 60 degrees south latitude.

*Cargo associated wastes* means all materials which have become wastes as a result of use on board a ship for cargo stowage and handling. Cargo associated wastes include, but are not limited to dunnage, shoring, pallets, lining and packing materials, plywood, paper, cardboard, wire, and steel strapping.

*Clean ballast* means the ballast in a tank which, since oil was last carried therein, has been so cleaned that effluent therefrom, if it were discharged from a ship that is stationary into clean calm water on a clear day would not produce visible traces of oil on the surface of the water or adjoining shorelines or cause a sludge or emulsion to be deposited beneath the surface of the water or upon adjoining shorelines. If the ballast is discharged through an oil discharge monitoring and control system approved by the government of the country under whose authority the ship is operating, evidence based on such a system, to the effect that the oil content of the effluent does not exceed 15 parts per million (ppm) is determinative that the ballast is clean.

*Commandant* means Commandant, U.S. Coast Guard.

*Discharge* means any release, however caused, from a ship and includes any escape, disposal, spilling, leaking, pumping, emitting or emptying. It does not include—

(1) Dumping within the meaning of the Convention on the Prevention of Marine Pollution by Dumping of Wastes and Other Matter, done at London on 13 November 1972; or

(2) Release of oil or oily mixtures directly arising from the exploration, exploitation and associated off-shore processing of sea-bed mineral resources.

*Discharge*, as defined by MARPOL 73/78 in relation to harmful substances or effluent containing such substances, means any release however caused from a ship, and includes any escape, disposal, spilling, leaking, pumping, emitting or emptying. It does not include—

(1) Dumping within the meaning of the Convention on the Prevention of Marine Pollution by Dumping of Wastes and Other Matter, done at London on November 13, 1972; or

(2) The release of harmful substances directly arising from the exploration, exploitation, and associated offshore processing of seabed mineral resources; or

(3) The release of harmful substances for purposes of legitimate scientific research relating to pollution abatement or control.

*Dishwater* means the liquid residue from the manual or automatic washing of dishes and cooking utensils which have been pre-cleaned to the extent that any food particles adhering to them would not normally interfere with the operation of automatic dishwashers.

*Domestic wastes* means all types of wastes generated in the living spaces on board a ship, except victual wastes.

*Existing ship* means a ship that is not a new ship.

*Fuel oil* means any oil used to fuel the propulsion and auxiliary machinery of the ship carrying the fuel. The term ''fuel oil'' is also known as ''oil fuel.''

*Garbage* means all kinds of victual, domestic, and operational waste, excluding fresh fish and parts thereof, generated during the normal operation of the ship and liable to be disposed of continuously or periodically, except dishwater, graywater, and those substances that are defined or listed in other Annexes to MARPOL 73/78.

*Graywater* means drainage from dishwasher, shower, laundry, bath, and washbasin drains and does not include drainage from toilets, urinals, hospitals, and cargo spaces.

*Great Lakes* means the Great Lakes of North America and the St. Lawrence River west of a rhumb line drawn from Cap des Rosiers to West Point, Anticosti Island, and, on the north side of Anticosti Island, the meridian of longitude 63 degrees west.

*Harmful substance* means any substance which, if introduced into the sea, is liable to create hazards to human health, harm living resources and marine life, damage amenities, or interfere with other legitimate uses of the sea, and includes any substance subject to control by MARPOL 73/78.

*High viscosity Category B NLS* means any Category B NLS having a viscosity of at least 25 mPa.s at 20 °C and at least 25 mPa.s at the time it is unloaded.

*High viscosity Category C NLS* means any Category C NLS having a viscosity of at least 60 mPa.s at 20 °C and at least 60 mPa.s at the time it is unloaded.

*High viscosity NLS* includes Category A NLSs having a viscosity of at least 25 mPa.s at 20 °C and at least 25 mPa.s at the time they are unloaded, high viscosity Category B NLSs, and high viscosity Category C NLSs.

*Instantaneous rate of discharge of oil content* means the rate of discharge of oil in liters per hour at any instant divided by the speed of the ship in knots at the same instant.

*Length* means the horizontal distance between the foremost part of a ship's stem to the aftermost part of its stern, excluding fittings and attachments.

*Maintenance waste* means materials collected while maintaining and operating the ship, including, but not limited to, soot, machinery deposits, scraped paint, deck sweepings, wiping wastes, and rags.

*Major conversion* means a conversion of an existing ship—

(1) That substantially alters the dimensions or carrying capacity of the ship; or

(2) That changes the type of the ship; or

(3) The intent of which, in the opinion of the government of the country under whose authority the ship is operating, is substantially to prolong its life; or

(4) Which otherwise so alters the ship that, if it were a new ship, it would become subject to relevant provisions of MARPOL 73/78 not applicable to it as an existing ship.

*Marine pollutant* means a harmful substance in packaged form, as it appears in Appendix B of 49 CFR 172.101.

*MARPOL 73/78* means the International Convention for the Prevention of Pollution from Ships, 1973, as modified by the Protocol of 1978 relating to that Convention. A copy of MARPOL 73/78 is available from the International Maritime Organization, 4 Albert Embankment, London, SE1, SR7, England.

*Medical waste* means isolation wastes, infectious agents, human blood and

blood products, pathological wastes, sharps, body parts, contaminated bedding, surgical wastes and potentially contaminated laboratory wastes, dialysis wastes, and such additional medical items as prescribed by the Administrator of the EPA by regulation.

*Nearest land*. The term ''from the nearest land'' means from the baseline from which the territorial sea of the territory in question is established in accordance with international law, except that, for the purposes of these regulations, ''from the nearest land'' off the north eastern coast of Australia shall mean from a line drawn from a point on the coast of Australia in—

latitude 11°00′ South, longitude 142°08′ East to a point in—latitude 10°35′ South, longitude 141°55′ East, thence to a point—latitude 10°00′ South, longitude 142°00′ East, thence to a point—latitude 9°10′ South, longitude 143°52′ East, thence to a point—latitude 9°00′ South, longitude 144°30′ East, thence to a point—latitude 13°00′ South, longitude 144°00′ East, thence to a point—latitude 15°00′ South, longitude 146°00′ East, thence to a point—latitude 18°00′ South, longitude 147°00′ East, thence to a point—latitude 21°00′ South, longitude 153°00′ East, thence to a point on the coast of Australia in latitude 24°42′ South, longitude 153°15′ East.

*New ship* means a ship—

(1) For which the building contract is placed after December 31, 1975; or

(2) In the absence of a building contract, the keel of which is laid or which is at a similar stage of construction after June 30, 1976; or

(3) The delivery of which is after December 31, 1979; or

(4) That has undergone a major conversion—

(i) For which the contract is placed after December 31, 1975;

(ii) In the absence of a contract, the construction work of which is begun after June 30, 1976; or

(iii) That is completed after December 31, 1979.

(5) For the purposes of §§151.26 through 151.28, which is delivered on or after April 4, 1993.

*NLS* means Noxious Liquid Substance.

*NLS Certificate* means an International Pollution Prevention Certificate for the Carriage of Noxious Liquid Substances in Bulk issued under MARPOL 73/78.

*Noxious liquid substance* (NLS) means—

(1) Each substance listed in §151.47 or §151.49;

(2) Each substance having an ''A'', ''B'', ''C'', or ''D'' beside it's name in the column headed ''Pollution Category'' in Table 1 of 46 CFR Part 153; and

(3) Each substance that is identified as an NLS in a written permission issued under 46 CFR 153.900 (d).

*Oceangoing* ship means a ship that—

(1) Is operated under the authority of the United States and engages in international voyages;

(2) Is operated under the authority of the United States and is certificated for ocean service;

(3) Is operated under the authority of the United States and is certificated for coastwise service beyond three miles from land;

(4) Is operated under the authority of the United States and operates at any time seaward of the outermost boundary of the territorial sea of the United States as defined in §2.22 of this chapter; or

(5) Is operated under the authority of a country other than the United States.

NOTE: A Canadian or U.S. ship being operated exclusively on the Great Lakes of North America or their connecting and tributary waters, or exclusively on the internal waters of the United States and Canada; is not an ''oceangoing'' ship.

*Oil* means petroleum whether in solid, semi-solid, emulsified, or liquid form, including but not limited to, crude oil, fuel oil, sludge, oil refuse, oil residue, and refined products, and, without limiting the generality of the foregoing, includes the substances listed in Appendix I of Annex I of MARPOL 73/78. ''Oil'' does not include animal and vegetable based oil or noxious liquid substances (NLS) designated under Annex II of MARPOL 73/78.

*Oil cargo residue* means any residue of oil cargo whether in solid, semi-solid, emulsified, or liquid form from cargo tanks and cargo pump room bilges, including but not limited to, drainages, leakages, exhausted oil, muck, clingage, sludge, bottoms, paraffin (wax), and any constituent component

of oil. The term ''oil cargo residue'' is also known as ''cargo oil residue.''

*Oil residue* means—

(1) Oil cargo residue; and

(2) Other residue of oil whether in solid, semi-solid, emulsified, or liquid form, resulting from drainages, leakages, exhausted oil, and other similar occurrences from machinery spaces.

*Oily mixture* means a mixture, in any form, with any oil content. ''Oily mixture'' includes, but is not limited to—

(1) Slops from bilges;

(2) Slops from oil cargoes (such as cargo tank washings, oily waste, and oily refuse);

(3) Oil residue; and

(4) Oily ballast water from cargo or fuel oil tanks.

*Oily rags* means rags soaked with oil.

*Oil-like NLS* means each cargo listed in § 151.49.

*Oil tanker* means a ship constructed or adapted primarily to carry oil in bulk in its cargo spaces and includes combination carriers and any ''chemical tanker'' as defined in Annex II of MARPOL 73/78 when it is carrying a cargo or part cargo of oil in bulk.

*Oily mixture* means a mixture with any oil content, including bilge slops, oily wastes, oil residues (sludge), oily ballast water, and washings from cargo oil tanks.

*Operational waste* means all cargo-associated waste, maintenance waste, and cargo residues other than oil residues and NLS cargo residues. ''Operational wastes'' includes ashes and clinkers (*i.e.*, a mass of incombustible matter fused together by heat) from shipboard incinerators and coal-burning boilers but does not include plastic clinkers, which are treated as an Annex V waste, or oily rags, which are treated as an Annex I waste.

*Person* means an individual, firm, public or private corporation, partnership, association, State, municipality, commission, political subdivision of a State, or any interstate body.

*Plastic* means any garbage that is solid material, that contains as an essential ingredient one or more synthetic organic high polymers, and that is formed or shaped either during the manufacture of the polymer or polymers or during fabrication into a finished product by heat or pressure or both. ''Degradable'' plastics, which are composed of combinations of degradable starches and are either (a) synthetically produced or (b) naturally produced but harvested and adapted for use, are plastics under this part. Naturally produced plastics such as crabshells and other types of shells, which appear normally in the marine environment, are not plastics under this part.

NOTE: Plastics possess material properties ranging from hard and brittle to soft and elastic. Plastics are used for a variety of marine applications including, but not limited to: food wrappings, products for personal hygiene, packaging (vaporproof barriers, bottles, containers, and liners), ship construction (fiberglass and laminated structures, siding, piping insulation, flooring, carpets, fabrics, adhesives, and electrical and electronic components), disposable eating-utensils and cups (including styrene products), bags, sheeting, floats, synthetic fishing nets, monofilament fishing line, strapping bands, hardhats, and synthetic ropes and lines.

*Port* means—

(1) A group of terminals that combines to act as a unit and be considered a port for the purposes of this subpart;

(2) A port authority or other organization that chooses to be considered a port for the purposes of this subpart; or

(3) A place or facility that has been specifically designated as a port by the COTP.

*Prewash* means a tank washing operation that meets the procedure in 46 CFR 153.1120.

*Recognized Classification Society* means a classification society that is a participating member of the International Association of Classification Societies (IACS).

*Residues and mixtures containing NLSs* (NLS residue) means—

(1) Any Category A, B, C, or D NLS cargo retained on the ship because it fails to meet consignee specifications;

(2) Any part of a Category A, B, C, or D NLS cargo remaining on the ship after the NLS is discharged to the consignee, including but not limited to puddles on the tank bottom and in sumps, clingage in the tanks, and substance remaining in the pipes; or

(3) Any material contaminated with Category A, B, C, or D NLS cargo, including but not limited to bilge slops, ballast, hose drip pan contents, and tank wash water.

*Segregated ballast* means the ballast water introduced into a tank that is completely separated from the cargo oil and fuel oil system and that is permanently allocated to the carriage of ballast or to the carriage of ballast or cargoes other than oil or noxious substances as variously defined in the Annexes of MARPOL 73/78.

*Ship* means a vessel of any type whatsoever, operating in the marine environment. This includes hydrofoils, air-cushion vehicles, submersibles, floating craft whether self-propelled or not, and fixed or floating drilling rigs and other platforms.

*Shipboard oil pollution emergency plan* means a plan prepared, submitted, and maintained according to the provisions of §§151.26 through 151.28 of this subpart for United States ships or maintained according to the provisions of §151.29(a) of this subpart for foreign ships operated under the authority of a country that is party to MARPOL 73/78 or carried on board foreign ships operated under the authority of a country that is not a party to MARPOL 73/78, while in the navigable waters of the United States, as evidence of compliance with §151.21 of this subpart.

*Solidifying NLS* means a Category A, B, or C NLS that has a melting point—

(1) Greater than 0 °C but less than 15 °C and a temperature, measured under the procedure in 46 CFR 153.908(d), that is less than 5 °C above its melting point at the time it is unloaded; or

(2) 15 °C or greater and a temperature, measured under the procedure in 46 CFR 153.908(d), that is less than 10 °C above its melting point at the time it is unloaded.

*Special area* means a sea area, where for recognized technical reasons in relation to its oceanographical and ecological condition and to the particular character of the traffic, the adoption of special mandatory methods for the prevention of sea pollution by oil, NLSs, or garbage is required.

*Terminal* means an onshore facility or an offshore structure located in the navigable waters of the United States or subject to the jurisdiction of the United States and used, or intended to be used, as a port or facility for the transfer or other handling of a harmful substance.

NOTE: The Coast Guard interprets commercial fishing facilities, recreational boating facilities, and mineral and oil industry shorebases to be terminals for the purposes of Annex V of MARPOL 73/78, since these facilities normally provide wharfage and other services, including garbage handling, for ships.

*U.S. inspected ships* means those ship required to be inspected and certificated under 46 CFR 2.01–7.

*Victual waste* means any spoiled or unspoiled food waste.

[CGD 75–124a, 48 FR 45709, Oct. 6, 1983; 48 FR 54977, Dec. 8, 1983, as amended by CGD 85–010, 52 FR 7758, Mar. 12, 1987; CGD 88–002, 54 FR 18403, Apr. 28, 1989; CGD 88–002A, 55 FR 18582, May 2, 1990; 55 FR 35988, Sept. 4, 1990; 56 FR 8880, Mar. 1, 1991; CGD 93–030, 59 FR 51338, Oct. 7, 1994; CGD 94–056, 60 FR 43377, Aug. 21, 1995; CGD 97–015, 62 FR 18045, Apr. 14, 1997; USCG 2000–7079, 65 FR 67155, Nov. 8, 2000; USCG–2000–7641, 66 FR 55570, Nov. 2, 2001; USCG–2000–6927, 70 FR 74675, Dec. 16, 2005; USCG–2008–0179, 73 FR 35013, June 19, 2008]

## § 151.06 Special areas.

(a) For the purposes of this part, the navigational descriptions of the special areas are as follows:

(1) The Mediterranean Sea area means the Mediterranean Sea proper including the gulfs and seas therein, with the boundary between the Mediterranean and the Black Sea constituted by the 41° N parallel and bounded to the west by the Straits of Gibraltar at the meridian of 5°36′ W.

(2) The Baltic Sea means the Baltic Sea proper with the Gulf of Bothnia, the Gulf of Finland, and the entrance to the Baltic Sea bounded by the parallel of the Skaw in the Skagerrak at 57°44.8′ N.

(3) The Black Sea area means the Black Sea proper with the boundary between the Mediterranean Sea and the Black Sea constituted by the parallel 41° N.

(4) The Red Sea area means the Red Sea proper including the Gulfs of Suez and Aqaba bounded at the south by the rhumb line between Ras si Ane (12°8.5′ N, 43°19.6′ E) and Husn Murad (12°40.4′ N, 43°30.2′ E).

(5) The Gulfs areas means the sea area located northwest of the rhumb line between Ras al Hadd (22°30′ N, 59°48′ E) and Ras al Fasteh (25°04′ N, 61°25′ E).

(6) The Gulf of Aden areas means the part of the Gulf of Aden between the Red Sea and the Arabian Sea bounded to the west by the rhumb line between Ras si Ane (12°28.5′ N, 43°19.6′ E) and Husn Murad (12°40.4′ N, 43°30.2′ E) and to the east by the rhumb line between Ras Asir (11°50′ N, 51°16.9′ E) and the Ras Fartak (15°35′ N, 52°13.8′ E).

(7) The Antarctic areas means the sea south of 60° south latitude.

(8) *The North West European waters* mean the North Sea and its approaches, the Irish Sea and its approaches, the Celtic Sea, the English Channel and its approaches and part of the North East Atlantic immediately to the west of Ireland. The area is bounded by lines joining the following points:

48°27′ N on the French coast
48°27′ N; 006°25′ W
49°52′ N; 007°44′ W
50°30′ N; 012° W
56°30′ N; 012° W
62° N; 003° W
62°′ N on the Norwegian coast
57°44′.8 N on the Danish and Swedish coasts.

(9) *The Oman area of the Arabian Sea* means the sea enclosed by the following co-ordinates:

22°30′.00 N; 059°48′.00 E
23°47′.27 N; 060°35′.73 E
22°40′.62 N; 062°25′.29 E
21°47′.40 N; 063°22′.22 E
20°30′.37 N; 062°52′.41 E
19°45′.90 N; 062°25′.97 E
18°49′.92 N; 062°02′.94 E
17°44′.36 N; 061°05′.53 E
16°43′.71 N; 060°25′.62 E
16°03′.90 N; 059°32′.24 E
15°15′.20 N; 058°58′.52 E
14°36′.93 N; 058°10′.23 E
14°18′.93 N; 057°27′.03 E
14°11′.53 N; 056°53′.75 E
13°53′.80 N; 056°19′.24 E
13°45′.86 N; 055°54′.53 E
14°27′.38 N; 054°51′.42 E
14°40′.10 N; 054°27′.35 E
14°46′.21 N; 054°08′.56 E
15°20′.74 N; 053°38′.33 E
15°48′.69 N; 053°32′.07 E
16°23′.02 N; 053°14′.82 E

(10) *The Southern South African waters* means the sea area enclosed by the following co-ordinates:

31°14′ S; 017°50′ E
31°30′ S; 017°12′ E
32°00′ S; 017°06′ E
32°32′ S; 016°52′ E
34°06′ S; 017°24′ E
36°58′ S; 020°54′ E
36°00′ S; 022°30′ E
35°14′ S; 022°54′ E
34°30′ S; 026°00′ E
33°48′ S; 027°25′ E
33°27′ S; 027°12′ E

(11) *The North Sea area* means the North Sea proper, including seas within the North Sea southwards of latitude 62° N and eastwards of longitude 4° W; the Skagerrak, the southern limit of which is determined east of the Skaw by latitude 57°44.8′ N; and the English Channel and its approaches eastwards of longitude 5° W.

(12) *The Wider Caribbean region* means the Gulf of Mexico and Caribbean Sea proper, including the bays and seas therein and that portion of the Atlantic Ocean within the boundary constituted by the 30° N parallel from Florida eastward to 77°30′ W meridian, thence a rhumb line to the intersection of 20° N parallel and 59° W meridian, thence a rhumb line to the intersection of 7°20′ N parallel and 50° W meridian, thence a rhumb line drawn southwesterly to the eastern boundary of French Guiana.

(b) Special areas for the purpose of Annex I of MARPOL 73/78 include those referenced in § 151.13. Special areas for the purposes of Annex II of MARPOL 73/78 include those referenced in § 151.32. Special areas for the purpose of Annex V of MARPOL 73/78 include those referenced in § 151.53.

[CGD 94–056, 60 FR 43377, Aug. 21, 1995, as amended by USCG–2008–0179, 73 FR 35013, June 19, 2008]

### § 151.07 Delegations.

Each Coast Guard official designated as a Captain of the Port (COTP) or Officer in Charge, Marine Inspection (OCMI) or Commanding Officer, Sector Office, is delegated the authority to—

(a) Issue International Oil Pollution Prevention (IOPP) Certificates;

(b) Detain or deny entry to ships not in substantial compliance with MARPOL 73/78 or not having an IOPP Certificate or evidence of compliance with MARPOL 73/78 on board;

(c) Receive and investigate reports under § 151.15; and

(d) Issue subpoenas to require the attendance of any witness and the production of documents and other evidence, in the course of investigations of potential violations of the Act to Prevent Pollution from Ships, as amended (33 U.S.C. 1901–1911), this subpart, or MARPOL 73/78.

[CGD 88–002, 54 FR 18404, Apr. 28, 1989, as amended by CGD 88–002A, 55 FR 18582, May 2, 1990; USCG–2006–25556, 72 FR 36328, July 2, 2007]

### § 151.08 Denial of entry.

(a) Unless a ship is entering under force majeure, no oceangoing tanker or any other oceangoing ship of 400 gross tons or more required by § 151.10 to retain oil, oil residue, or oily mixtures on board while at sea, and no oceangoing ship carrying a Category A, B, or C NLS cargo or NLS residue in cargo tanks that are required to be prewashed under 46 CFR part 153, may enter any port or terminal under § 158.110(a) of this chapter unless the port or terminal has a Certificate of Adequacy, as defined in § 158.120 of this chapter.

(b) A COTP may deny the entry of a ship to a port or terminal under § 158.110(b) if—

(1) The port or terminal does not have a Certificate of Adequacy, as required in § 158.135 of this chapter; or

(2) The port or terminal is not in compliance with the requirements of subpart D of part 158.

[CGD 88–002, 54 FR 18404, Apr. 28, 1989, as amended by USCG–2000–7641, 66 FR 55570, Nov. 2, 2001]

## OIL POLLUTION

SOURCE: Sections 151.09 through 151.25 appear by CGD 75–124a, 48 FR 45709, Oct. 6, 1983, unless otherwise noted.

### § 151.09 Applicability.

(a) Except as provided in paragraph (b) of this section, §§ 151.09 through 151.25 apply to each ship that—

(1) Is operated under the authority of the United States and engages in international voyages;

(2) Is operated under the authority of the United States and is certificated for ocean service;

(3) Is operated under the authority of the United States and is certificated for coastwise service beyond three nautical miles from land;

(4) Is operated under the authority of the United States and operates at any time seaward of the outermost boundary of the territorial sea of the United States as defined in § 2.22(a)(2) of this chapter; or

(5) Is operated under the authority of a country other than the United States while in the navigable waters of the United States, or while at a port or terminal under the jurisdiction of the United States.

(b) Sections 151.09 through 151.25 do not apply to—

(1) A warship, naval auxiliary, or other ship owned or operated by a country when engaged in noncommercial service;

(2) A Canadian or U.S. ship being operated exclusively on the Great Lakes of North America or their connecting and tributary waters;

(3) A Canadian or U.S. ship being operated exclusively on the internal waters of the United States and Canada; or

(4) Any other ship specifically excluded by MARPOL 73/78.

(c) Sections 151.26 through 151.28 apply to each United States oceangoing ship specified in paragraphs (a)(1) through (a)(4) of this section which is—

(1) An oil tanker of 150 gross tons and above or other ship of 400 gross tons and above; or

(2) A fixed or floating drilling rig or other platform, when not engaged in the exploration, exploitation, or associated offshore processing of seabed mineral resources.

(d) Sections 151.26 through 151.28 do not apply to—

(1) The ships specified in paragraph (b) of this section;

(2) Any barge or other ship which is constructed or operated in such a manner that no oil in any form can be carried aboard.

(e) Section 151.26(b)(5) applies to all vessels subject to the jurisdiction of the United States and operating in Antarctica.

NOTE TO §151.09(c)(3): The term ''internal waters'' is defined in §2.24 of this chapter.

[CGD 88–002, 54 FR 18404, Apr. 28, 1989, as amended by CGD 88–002A, 55 FR 18582, May 2, 1990; CGD 93–030, 59 FR 51338, Oct. 7, 1994; CGD 97–015, 62 FR 18045, Apr. 14, 1997; USCG–2006–25150, 71 FR 39209, July 12, 2006; USCG–2007–27887, 72 FR 45904, Aug. 16, 2007; USCG–2008–0179, 73 FR 35013, June 19, 2008]

### § 151.10 Control of oil discharges.

(a) When more than 12 nautical miles from the nearest land, any discharge of oil or oily mixtures into the sea from a ship other than an oil tanker or from machinery space bilges of an oil tanker is prohibited except when all of the following conditions are satisfied—

(1) The oil or oily mixture does not originate from cargo pump room bilges;

(2) The oil or oily mixture is not mixed with oil cargo residues;

(3) The ship is not within a special area;

(4) The ship is proceeding enroute;

(5) The oil content of the effluent without dilution is less than 15 parts per million (ppm); and

(6) The ship has in operation oily-water separating equipment, a bilge monitor, bilge alarm, or combination thereof as required by part 155 subpart B of this chapter.

(b) When within 12 nautical miles of the nearest land, any discharge of oil or oily mixtures into the sea from a ship other than an oil tanker or from machinery space bilges of an oil tanker is prohibited except when all of the following conditions are satisfied—

(1) The oil or oily mixture does not originate from cargo pump room bilges;

(2) The oil or oily mixture is not mixed with oil cargo residues;

(3) The oil content of the effluent without dilution does not exceed 15 ppm;

(4) The ship has in operation oily-water separating equipment, a bilge monitor, bilge alarm, or combination thereof as required by part 155 subpart B of this chapter; and

(5) The oily-water separating equipment is equipped with a 15 ppm bilge alarm; for U.S. inspected ships, approved under 46 CFR 162.050 and for U.S. uninspected ships and foreign ships, either approved under 46 CFR 162.050 or listed in the current International Maritime Organization (IMO) Marine Environment Protection Committee (MEPC) Circular summary of MARPOL 73/78 approved equipment.

NOTE: In the navigable waters of the United States, the Federal Water Pollution Control Act (FWPCA), section 311(b)(3) and 40 CFR part 110 govern all discharges of oil or oily-mixtures.

(c) The overboard discharge of any oil cargo residues and oily mixtures that include oil cargo residues from an oil tanker is prohibited, unless discharged in compliance with part 157 of this chapter.

(d) When more than 12 nautical miles from the nearest land, any discharge of oil or oily mixtures into the sea from a ship other than an oil tanker or from machinery space bilges of an oil tanker; that is not proceeding enroute; shall be in accordance with paragraphs (b)(1), (b)(2), (b)(3), (b)(4), and (b)(5) of this section.

(e) The provisions of paragraphs (a), (b), (c) and (d) of this section do not apply to the discharge of clean or segregated ballast.

(f) The person in charge of an oceangoing ship that cannot discharge oily mixtures into the sea in compliance with paragraphs (a), (b), (c), or (d) of this section must ensure that those oily mixtures are—

(1) Retained on board; or

(2) Discharged to a reception facility. If the reception facility is in a port or terminal in the United States, each person who is in charge of each oceangoing tanker or any other oceangoing ship of 400 gross tons or more shall notify the port or terminal, at least 24 hours before entering the port or terminal, of—

(i) The estimated time of day the ship will discharge oily mixtures;

(ii) The type of oily mixtures to be discharged; and

(iii) The volume of oily mixtures to be discharged.

NOTE: There are Federal, state, or local laws or regulations that could require a written description of the oil residues and oily mixtures to be discharged. For example, a residue or mixture containing oil might have a flashpoint less than 60 °C (140 °F) and thus have the characteristic of ignitability under 40 CFR 261.21, which might require a description of the waste for a manifest under 40 CFR part 262, subpart B. Occupational safety and

health concerns may be covered, as well as environmental ones.

The notice required in this section is in addition to those required by other Federal, state, and local laws and regulations. Affected persons should contact the appropriate Federal, state, or local agency to determine whether other notice and information requirements, including 40 CFR Parts 262 and 263, apply to them.

(g) No discharge into the sea shall contain chemicals or other substances introduced for the purpose of circumventing the conditions of discharge specified in this regulation.

(h) This section does not apply to a fixed or floating drilling rig or other platform that is operating under a National Pollutant Discharge Elimination System (NPDES) permit.

[CGD 75–124a, 48 FR 45709, Oct. 6, 1983, as amended by CGD 78–035, 50 FR 36793, Sept. 9, 1985. Redesignated by CGD 88–002, 54 FR 18404, Apr. 28, 1989; USCG–1998–3799, 63 FR 35530, June 30, 1998; USCG–2000–7641, 66 FR 55571, Nov. 2, 2001]

### § 151.11 Exceptions for emergencies.

(a) Sections 151.10 and 151.13 do not apply to—

(1) The discharge into the sea of oil or oily mixture necessary for the purpose of securing the safety of a ship or saving life at sea.

(2) The discharge into the sea of oil or oily mixture resulting from damage to a ship or its equipment—

(i) Provided that all reasonable precautions have been taken after the occurrence of the damage or discovery of the discharge for the purpose of preventing or minimizing the discharge; and

(ii) Except if the owner or the master acted either with intent to cause damage, or recklessly and with knowledge that damage would probably result.

(b) [Reserved]

[CGD 75–134a, 48 FR 45709, Oct. 6, 1983, as amended by CGD 88–002, 54 FR 18404, Apr. 28, 1989]

### § 151.13 Special areas for Annex I of MARPOL 73/78.

(a) For the purposes of §§ 151.09 through 151.25, the special areas are the Mediterranean Sea area, the Baltic Sea area, the Black Sea area, the Red Sea area, the Gulfs area, the Gulf of Aden, and the Antarctic area, the North West European waters, and Oman area of the Arabian Sea which are described in § 151.06. The discharge restrictions are effective in the Mediterranean Sea, Baltic Sea, Black Sea, and the Antarctic area.

(b) Subject to the provisions of § 151.11—

(1) A ship of 400 gross tons or over and any oil tanker may not discharge oil or oily mixture within a special area. In the Antarctic area, discharge into the sea of oil or oily mixture from any ship is prohibited.

(2) A ship of less than 400 gross tons other than an oil tanker may not discharge oil or oily mixture within a special area, unless the oil content of the effluent without dilution does not exceed 15 parts per million (ppm).

(3) All ships operating in the Antarctic area must have on board a tank or tanks of sufficient capacity to retain all oily mixtures while operating in the area and arrangements made to discharge oily mixtures at a reception facility outside the Antarctic area.

(c) The provisions of paragraph (b) of this section do not apply to the discharge of clean or segregated ballast.

(d) The provisions of paragraph (b)(1) of this section do not apply to the discharge of processed bilge water from machinery space bilges, provided that all of the following conditions are satisfied—

(1) The bilge water does not originate from cargo pump room bilges;

(2) The bilge water is not mixed with oil cargo residues;

(3) The ship is proceeding enroute;

(4) The oil content of the effluent without dilution does not exceed 15 ppm;

(5) The ship has in operation oily-water separating equipment complying with part 155 of this chapter; and

(6) The oily-water separating equipment is equipped with a device that stops the discharge automatically when the oil content of the effluent exceeds 15 ppm.

(e) No discharge into the sea shall contain chemicals or other substances introduced for the purpose of circumventing the conditions of discharge specified in this section.

(f) The oily mixtures that cannot be discharged into the sea in compliance

with paragraphs (b), (c), or (d) of this section shall be retained on board or discharged to reception facilities.

(g) Nothing in this section prohibits a ship on a voyage, only part of which is in a special area, from discharging outside the special area in accordance with § 151.10.

(h) In accordance with Regulation 38.6.1 of Annex I of MARPOL 73/78, the discharge restriction in § 151.13 for the Red Sea area, Gulfs area, Gulf of Aden area, the Oman area of the Arabian Sea, and the Southern South African waters will enter into effect when each party to MARPOL 73/78 whose coastline borders the special area has certified that reception facilities are available and the IMO has established an effective date for each special area. Notice of the effective dates for the discharge requirements in these special areas will be published in the FEDERAL REGISTER and reflected in this section.

[CGD 75–124a, 48 FR 45709, Oct. 6, 1983; 48 FR 54977, Dec. 8, 1983, as amended by CGD 88–002, 54 FR 18404, Apr. 28, 1989; CGD 88–002A, 55 FR 18582, May 2, 1990; CGD 94–056, 60 FR 43377, Aug. 21, 1995; USCG–2000–7641, 66 FR 55571, Nov. 2, 2001; USCG–2008–0179, 73 FR 35013, June 19, 2008]

### § 151.15 Reporting requirements.

(a) The master, person in charge, owner, charterer, manager, or operator of a vessel involved in any incident described in paragraph (c) of this section must report the particulars of the incident without delay to the fullest extent possible under the provisions of this section.

(b) If a vessel involved in an incident is abandoned, or if a report from that vessel is incomplete or unattainable, the owner, charterer, manager, operator, or their agent must assume the obligations placed upon the master or other person having charge of the vessel under provisions of this section.

(c) The report must be made whenever an incident involves—

(1) A discharge of oil, hazardous substances, marine pollutants, or noxious liquid substances (NLS) resulting from damage to the vessel or its equipment, or for the purpose of securing the safety of a vessel or saving a life at sea;

(2) A discharge of oil in excess of the quantities or instantaneous rate permitted in §§ 151.10 or 151.13 of this chapter, or NLS in bulk, in 46 CFR 153.1126 or 153.1128, during the operation of the vessel;

(3) A discharge of marine pollutants in packaged form; or

(4) A probable discharge resulting from damage to the vessel or its equipment. The factors you must consider to determine whether a discharge is probable include, but are not limited to—

(i) Ship location and proximity to land or other navigational hazards;

(ii) Weather;

(iii) Tide current;

(iv) Sea state;

(v) Traffic density;

(vi) The nature of damage to the vessel; and

(vii) Failure or breakdown aboard the vessel of its machinery or equipment. Such damage may be caused by collision, grounding, fire, explosion, structural failure, flooding or cargo shifting or a failure or breakdown of steering gear, propulsion, electrical generating system or essential shipboard navigational aids.

(d) Each report must be made by radio whenever possible, or by the fastest telecommunications channels available with the highest possible priority at the time the report is made to—

(1) The appropriate officer or agency of the government of the country in whose waters the incident occurs; and

(2) The nearest Captain of the Port (COTP) or the National Response Center (NRC), toll free number 800–424–8802 (in Washington, DC, metropolitan area, 202–267–2675), fax 202–267–1322, telex number 892427 for incidents involving U.S. vessels in any body of water; or incidents involving foreign flag vessels in the navigable waters of the United States; or incidents involving foreign-flag tank vessels within waters subject to the jurisdiction of the United States, including the Exclusive Economic Zone (EEZ).

(e) Each report must contain—

(1) The identity of the ship;

(2) The type of harmful substance involved;

(3) The time and date of the incident;

(4) The geographic position of the vessel when the incident occurred;

(5) The wind and the sea condition prevailing at the time of the incident;

(6) Relevant details respecting the condition of the vessel;

(7) A statement or estimate of the quantity of the harmful substance discharged or likely to be discharged into the sea; and

(8) Assistance and salvage measures.

(f) A person who is obligated under the provisions of this section to send a report must—

(1) Supplement the initial report, as necessary, with information concerning further developments; and

(2) Comply as fully as possible with requests from affected countries for additional information concerning the incident.

(g) A report made under this section satisfies the reporting requirements of § 153.203 of this chapter and of 46 CFR 4.05–1 and 4.05–2, if required under those provisions.

[USCG–2000–6927, 70 FR 74675, Dec. 16, 2005, as amended by USCG–2006–25150, 71 FR 39209, July 12, 2006; USCG–2008–0179, 73 FR 35014, June 19, 2008]

### § 151.17 Surveys.

(a) Every U.S. oil tanker of 150 gross tons and above, and every other U.S. ship of 400 gross tons and above; that is required to have an International Oil Pollution Prevention (IOPP) Certificate on board and to which this part applies, except as provided for in paragraphs (b) and (d) of this section; is subject to the following surveys conducted by the Coast Guard—

(1) An initial survey, conducted before the ship is put in service or before an IOPP Certificate required under § 151.19 is issued for the first time; this survey includes a complete examination of its structure, equipment, systems, fittings, arrangements and material in so far as the ship is covered by this chapter.

(2) Periodic renewal surveys conducted at intervals corresponding with the renewal of the IOPP Certificates. The purpose of the survey is to determine whether the structure, equipment, systems, fittings, arrangements, and material comply with the requirements of parts 155 and 157 of this chapter.

(3) Annual surveys for inspected ships conducted as close as practicable to twelve (12) and thirty-six (36) months from the date of issuance of the IOPP Certificate, and not more than two months prior to or later than these twelve and thirty-six month dates; this survey is to determine that the oily-water separating equipment and associated pumps and piping systems remain satisfactory for the service intended, and that no unauthorized alterations have been made, and is to be endorsed on the IOPP Certificate.

(4) Intermediate surveys for inspected ships conducted as close as practicable to twenty-four (24) months from the date of issuance of the IOPP Certificates, and not more than six months prior to or later than that twenty-four month date; this survey is to determine whether the equipment and associated pump and piping systems, including oil discharge monitoring and control systems, and oily-water separating equipment comply with the requirements of parts 155 and 157 of this chapter, and are in good working order, and is to be endorsed on the IOPP Certificate.

(5) Intermediate surveys for uninspected ships conducted as close as practicable to thirty (30) months from the date of issuance of the IOPP Certificate, and not more than six months prior to or later than that thirty month date; this survey is to determine whether the equipment and associated pump and piping systems, including oil discharge monitoring and control systems, and oily-water separating equipment comply with the requirements of parts 155 and 157 of this chapter, and are in good working order, and is to be endorsed on the IOPP Certificate.

(b) Every U.S. inspected oil tanker of 150 gross tons and above, and every other U.S. inspected ship of 400 gross tons and above; that is not required to have an IOPP Certificate on board is subject to the following surveys to be conducted by the Coast Guard—

(1) An initial survey conducted before the ship is put into service.

(2) All other surveys are conducted concurrently with either inspections for certification or required reinspections.

(c) After any survey of a ship under this section has been completed, no significant change may be made in the construction, equipment, fittings, arrangements or material covered by the survey without the sanction of the COTP or OCMI except for the direct replacement of such equipment or fittings.

(d) Fixed and floating drilling rigs and other platforms, barges, and uninspected ships; that are not required to have an IOPP Certificate on board are not required to be surveyed under this section.

[CGD 75–124a, 48 FR 45709, Oct. 6, 1983, as amended by USCG–1998–3799, 63 FR 35530, June 30, 1998]

### § 151.19 International Oil Pollution Prevention (IOPP) Certificates.

(a) Each U.S. oil tanker of 150 gross tons and above and each other U.S. ship of 400 gross tons and above; that engages in voyages to ports or off-shore terminals under the jurisdiction of other parties to MARPOL 73/78 must have on board a valid International Oil Pollution Prevention (IOPP) Certificate.

(b) Each oil tanker of 150 gross tons and above and each other ship of 400 gross tons and above, operated under the authority of a country other than the United States that is party to MARPOL 73/78, must have on board a valid IOPP Certificate.

(c) An IOPP Certificate is issued by a COTP, OCMI, or a classification society authorized under 46 CFR part 8, after a satisfactory survey in accordance with the provisions of § 151.17.

(d) The Supplement to the IOPP Certificate is a part of the IOPP Certificate and must remain attached to that Certificate. If the Supplement to the Certificate is changed, a new IOPP Certificate will be required.

(e) The IOPP Certificate for each inspected or uninspected ship is valid for a maximum period of 5 years from the date of issue, except as follows:

(1) A Certificate ceases to be valid if significant alterations have taken place in the construction, equipment, fittings, or arrangements required by the pollution prevention requirements of parts 155 or 157 of this chapter without the approval of the COTP or the OCMI.

(2) A Certificate ceases to be valid if intermediate surveys as required by § 151.17 of this part are not carried out.

(3) A Certificate issued to a ship ceases to be valid upon transfer of the ship to the flag of another country.

(Approved by the Office of Management and Budget under control number 1625–0041)

[CGD 75–124a, 48 FR 45709, Oct. 6, 1983, as amended by CGD 95–010, 62 FR 67531, Dec. 24, 1997; USCG–1998–3799, 63 FR 35530, June 30, 1998; USCG–2000–7223, 65 FR 40057, June 29, 2000; USCG–2000–7641, 66 FR 55571, Nov. 2, 2001; USCG–2006–25150, 71 FR 39209, July 12, 2006]

### § 151.21 Ships of countries not party to MARPOL 73/78.

(a) Each oil tanker of 150 gross tons and above and each other ship of 400 gross tons and above, operated under the authority of a country not a party to MARPOL 73/78, must have on board valid documentation showing that the ship has been surveyed in accordance with and complies with the requirements of MARPOL 73/78. Evidence of compliance may be issued by either the government of a country that is party to MARPOL 73/78 or a recognized classification society.

(b) Evidence of compliance must contain all of the information in, and have substantially the same format as, the IOPP Certificate.

(Approved by the Office of Management and Budget under control number 1625–0019)

[CGD 75–124a, 48 FR 45709, Oct. 6, 1983, as amended by CGD 93–030, 59 FR 51338, Oct. 7, 1994; USCG–2006–25150, 71 FR 39209, July 12, 2006]

### § 151.23 Inspection for compliance and enforcement.

(a) While at a port or terminal under the jurisdiction of the United States, a ship is subject to inspection by the Coast Guard—

(1) To determine that a valid IOPP Certificate is on board and that the condition of the ship and its equipment corresponds substantially with the particulars of the IOPP Certificate;

(2) To determine that evidence of compliance with MARPOL 73/78, as required by § 151.21 is on board and that

the condition of the ship and its equipment corresponds substantially with the particulars of this evidence of compliance;

(3) To determine whether a ship has been operating in accordance with and has not discharged any oil or oily mixtures in violation of the provisions of MARPOL 73/78 or this subchapter;

(4) To determine whether a ship has discharged oil or oily mixtures anywhere in violation of MARPOL 73/78, upon request from a party to MARPOL 73/78 for an investigation when the requesting party has furnished sufficient evidence to support a reasonable belief that a discharge has occurred.

(b) A ship that does not comply with the requirements of parts 151, 155 and 157 of this chapter, or where the condition of the ship or its equipment does not substantially agree with the particulars of the IOPP Certificate or other required documentation, may be detained by order of the COTP or OCMI, at the port or terminal where the violation is discovered until, in the opinion of the detaining authority, the ship can proceed to sea without presenting an unreasonable threat of harm to the marine environment. The detention order may authorize the ship to proceed to the nearest appropriate available shipyard rather than remaining at the place where the violation was discovered.

(c) An inspection under this section may include an examination of the Oil Record Book, the oil content meter continuous records, and a general examination of the ship. A copy of any entry in the Oil Record Book may be made and the Master of the ship may be required to certify that the copy is a true copy of such entry.

[CGD 75–124a, 48 FR 45709, Oct. 6, 1983, as amended by CGD 88–002A, 55 FR 18582, May 2, 1990]

### § 151.25 Oil Record Book.

(a) Each oil tanker of 150 gross tons and above, ship of 400 gross tons and above other than an oil tanker, and manned fixed or floating drilling rig or other platform shall maintain an Oil Record Book Part I (Machinery Space Operations). An oil tanker of 150 gross tons and above or a non oil tanker that carries 200 cubic meters or more of oil in bulk, shall also maintain an Oil Record Book Part II (Cargo/Ballast Operations).

(b) An Oil Record Book printed by the U.S. Government is available to the masters or operators of all U.S. ships subject to this section, from any Coast Guard Sector Office, Marine Inspection Office, or Captain of the Port Office.

(c) The ownership of the Oil Record Book of all U.S. ships remains with the U.S. Government.

(d) Entries shall be made in the Oil Record Book on each occasion, on a tank to tank basis if appropriate, whenever any of the following machinery space operations take place on any ship to which this section applies—

(1) Ballasting or cleaning of fuel oil tanks;

(2) Discharge of ballast containing an oily mixture or cleaning water from fuel oil tanks;

(3) Disposal of oil residue; and

(4) Discharge overboard or disposal otherwise of bilge water that has accumulated in machinery spaces.

(e) Entries shall be made in the Oil Record Book on each occasion, on a tank to tank basis if appropriate, whenever any of the following cargo/ballast operations take place on any oil tanker to which this section applies—

(1) Loading of oil cargo;

(2) Internal transfer of oil cargo during voyage;

(3) Unloading of oil cargo;

(4) Ballasting of cargo tanks and dedicated clean ballast tanks;

(5) Cleaning of cargo tanks including crude oil washing;

(6) Discharge of ballast except from segregated ballast tanks;

(7) Discharge of water from slop tanks;

(8) Closing of all applicable valves or similar devices after slop tank discharge operations;

(9) Closing of valves necessary for isolation of dedicated clean ballast tanks from cargo and stripping lines after slop tank discharge operations; and

(10) Disposal of oil residue.

(f) Entries shall be made in the Oil Record Book on each occasion, on a tank-to-tank basis if appropriate,

whenever any of the following operations take place on a fixed or floating drilling rig or other platform to which this section applies—

(1) Discharge of ballast or cleaning water from fuel oil tanks; and

(2) Discharge overboard of platform machinery space bilge water.

(g) In the event of an emergency, accidental or other exceptional discharge of oil or oily mixture, a statement shall be made in the Oil Record Book of the circumstances of, and the reasons for, the discharge.

(h) Each operation described in paragraphs (d), (e) and (f) of this section shall be fully recorded without delay in the Oil Record Book so that all the entries in the book appropriate to that operation are completed. Each completed operation shall be signed by the person or persons in charge of the operations concerned and each completed page shall be signed by the master or other person having charge of the ship.

(i) The Oil Record Book shall be kept in such a place as to be readily available for inspection at all reasonable times and shall be kept on board the ship.

(j) The master or other person having charge of a ship required to keep an Oil Record Book shall be responsible for the maintenance of such record.

(k) The Oil Record Book for a U.S. ship shall be maintained on board for not less than three years.

(l) This section does not apply to a barge or a fixed or floating drilling rig or other platform that is not equipped to discharge overboard any oil or oily mixture.

(m) This section does not apply to a fixed or floating drilling rig or other platform that is operating in compliance with a valid National Pollutant Discharge Elimination System (NPDES) permit.

(Approved by the Office of Management and Budget under control number 1625–0009)

[CGD 75–124a, 48 FR 45709, Oct. 6, 1983; 48 FR 54977, Dec. 8, 1983, as amended by CGD 88–002A, 55 FR 18582, May 2, 1990; USCG–2000–7641, 66 FR 55571, Nov. 2, 2001; USCG–2006–25150, 71 FR 39209, July 12, 2006; USCG–2006–25556, 72 FR 36328, July 2, 2007]

## § 151.26 Shipboard oil pollution emergency plans.

(a) *Language of the plan.* The shipboard oil pollution emergency plan must be available on board in English and in the working language of the master and the officers of the ship, if other than English.

(b) *Plan format.* The plan must contain the following six sections. A seventh non-mandatory section may be included at the shipowner's discretion:

(1) *Introduction.* This section must contain the following:

(i) *Introductory text.* The introductory text of the plan must contain the following language (For ships operating in Antarctica, the introductory text of the plan must contain the following language *and* explain that they are in accordance with the Protocol on Environmental Protection to the Antarctic Treaty):

This plan is written in accordance with the requirements of Regulation 26 of Annex I of the International Convention for the Prevention of Pollution from Ships, 1973, as modified by the Protocol of 1978 relating thereto (MARPOL 73/78).

The purpose of the plan is to provide guidance to the master and officers on board the ship with respect to the steps to be taken when a pollution incident has occurred or is likely to occur.

The plan contains all information and operational instructions required by the guidelines (Resolution MEPC.54(32)). The appendices contain names, telephone numbers, telex numbers, etc. of all contacts referenced in the plan, as well as other reference material.

This plan has been approved by the Coast Guard and, except as provided below, no alteration or revision may be made to any part of it without the prior approval of the Coast Guard.

Changes to the seventh section of the plan and the appendices do not require approval by the Coast Guard. The appendices must be maintained up-to-date by the owners, operators, and managers.

(ii) General information.

(A) The ship's name, call sign, official number, International Maritime Organization (IMO) international number, and principal characteristics.

(B) [Reserved]

(2) *Preamble.* This section must contain an explanation of the purpose and use of the plan and indicate how the

shipboard plan relates to other shore-based plans.

(3) *Reporting Requirements.* This section of the plan must include information relating to the following:

(i) *When to report.* A report shall be made whenever an incident involves—

(A) A discharge of oil or oily mixture resulting from damage to the ship or its equipment, or for the purpose of securing the safety of a ship or saving life at sea;

(B) A discharge of oil or oily mixture during the operation of the ship in excess of the quantities or instantaneous rate permitted in § 151.10 of this subpart or in § 157.37 of this subchapter; or

(C) A probable discharge. Factors to be considered in determining whether a discharge is probable include, but are not limited to: ship location and proximity to land or other navigational hazards, weather, tide, current, sea state, and traffic density. The master must make a report in cases of collision, grounding, fire, explosion, structural failure, flooding or cargo shifting, or an incident resulting in failure or breakdown of steering gear, propulsion, electrical generating system, or essential shipborne navigational aids.

(ii) *Information required.* This section of the plan must include a notification form, such as that depicted in Table 151.26(b)(3)(ii)(A), that contains information to be provided in the initial and follow-up notifications. The initial notification should include as much of the information on the form as possible, and supplemental information, as appropriate. However, the initial notification must not be delayed pending collection of all information. Copies of the form must be placed at the location(s) on the ship from which notification may be made.

TABLE 151.26(b)(3)(ii)

| SHIPBOARD OIL POLLUTION EMERGENCY PLAN<br>SAMPLE FORMAT FOR INITIAL NOTIFICATION | |
|---|---|
| AA (SHIP NAME, CALL SIGN, FLAG) | |
| BB (DATE AND TIME OF EVENT, UTC)<br>□ □ □ □ □ □<br>D D H H M M | |
| CC (POSITION, LAT, LONG)<br>□ □ □ □ N S<br>d d m m<br>□ □ □ □ □ E W<br>d d d m m | DD (BEARING, DISTANCE FROM LANDMARK)<br>□ □ □ □<br>d d d N miles |
| EE (COURSE)<br>□ □ □<br>d d d | FF (SPEED, KNOTS)<br>□ □ □<br>km km 1/10 |
| LL (INTENDED TRACK) | |
| MM (RADIO STATION(S) GUARDED) | |
| NN (DATE AND TIME OF NEXT REPORT, UTC)<br>□ □ □ □ □ □<br>D D H H M M | |
| PP (TYPE AND QUANTITY OF CARGO/BUNKERS ON BOARD) | |
| OO (BRIEF DETAILS OF DEFECTS/DEFICIENCIES/DAMAGE) | |

TABLE 151.26(b)(3)(ii) Continued

| |
|---|
| RR (BRIEF DETAILS OF POLLUTION, INCLUDING ESTIMATE OF QUANTITY LOST) |
| SS (BRIEF DETAILS OF WEATHER AND SEA CONDITIONS)<br>WIND [DIRECTION ⊔ ⊔ ⊔ / SPEED (Beaufort)]  SWELL [DIRECTION ⊔ ⊔ ⊔ / HEIGHT (m)] |
| TT (CONTACT DETAILS OF SHIPS OWNER/OPERATOR/AGENT) |
| UU (SHIP, SIZE, AND TYPE)<br>LENGTH: (m) BREADTH: (m) DRAUGHT: (m) TYPE: |
| XX (ADDITIONAL INFORMATION)<br>BRIEF DETAILS OF INCIDENT:<br>NEED FOR OUTSIDE ASSISTANCE:<br>ACTIONS BEING TAKEN:<br>NUMBER OF CREW AND DETAILS OF ANY INJURIES:<br>DETAILS OF P&I CLUB & LOCAL CORRESPONDENT:<br>OTHERS: |

Note: The alphabetical reference letters in the above format are from "General principles for ship reporting systems and ship reporting requirements, including guidelines for reporting incidents involving dangerous goods, harmful substances and/or marine pollutants" adopted by the International Maritime Organization by resolution A.851(20). The letters do not follow the complete alphabetical sequence as certain letters are used to designate information required for other standard reporting formats, e.g., those used to transmit route information.

(iii) *Whom to contact.* (A) This section of the plan must make reference to the appendices listing coastal state contacts, port contacts, and ship interest contacts.

(B) For actual or probable discharges of oil, or oily mixtures the reports must comply with the procedures described in MARPOL Protocol I. The reports shall be directed to either the nearest Captain of the Port (COTP) or to the National Response Center (NRC), *toll free telephone number:* 800–424–8802, *direct telephone:* 202–267–2675, or *Fax:* 202–267–1322.

(C) For Antarctica, in addition to compliance with paragraph (b)(3)(iii)(B) of this section, reports shall also be directed to any Antarctic station that may be affected.

(4) *Steps to control a discharge.* This section of the plan must contain a discussion of procedures to address the following scenarios:

(i) Operational spills: The plan must outline procedures for removal of oil spilled and contained on deck. The plan must also provide guidance to ensure proper disposal of recovered oil and cleanup materials;

(A) Pipe leakage: The plan must provide specific guidance for dealing with pipe leakage;

(B) Tank overflow: The plan must include procedures for dealing with tank overflows. It must provide alternatives such as transferring cargo or bunkers to empty or slack tanks, or readying pumps to transfer the excess ashore;

(C) Hull leakage: The plan must outline procedures for responding to spills due to suspected hull leakage, including guidance on measures to be taken to reduce the head of oil in the tank involved either by internal transfer or discharge ashore. Procedures to handle situations where it is not possible to identify the specific tank from which

leakage is occurring must also be provided. Procedures for dealing with suspected hull fractures must be included. These procedures must take into account the effect of corrective actions on hull stress and stability.

(ii) Spills resulting from casualties: Each of the casualties listed below must be treated in the plan as a separate section comprised of various checklists or other means which will ensure that the master considers all appropriate factors when addressing the specific casualty. These checklists must be tailored to the specific ship. In addition to the checklists, specific personnel assignments for anticipated tasks must be identified. Reference to existing fire control plans and muster lists is sufficient to identify personnel responsibilities in the following situations:

(A) Grounding;

(B) Fire or explosion;

(C) Collision;

(D) Hull failure; and

(E) Excessive list.

(iii) In addition to the checklist and personnel duty assignments required by paragraph (b)(4)(ii) of this section, the plan must include—

(A) Priority actions to ensure the safety of personnel and the ship, assess the damage to the ship, and take appropriate further action;

(B) Information for making damage stability and longitudinal strength assessments, or contacting classification societies to acquire such information. Nothing in this section shall be construed as creating a requirement for damage stability plans or calculations beyond those required by law or regulation; and

(C) Lightening procedures to be followed in cases of extensive structural damage. The plan must contain information on procedures to be followed for ship-to-ship transfer of cargo. Reference may be made in the plan to existing company guides. A copy of such company procedures for ship-to-ship transfer operations must be kept in the plan. The plan must address the coordination of this activity with the coastal or port state, as appropriate.

(5) *National and Local Coordination.* (i) This section of the plan must contain information to assist the master in initiating action by the coastal State, local government, or other involved parties. This information must include guidance to assist the master with organizing a response to the incident should a response not be organized by the shore authorities. Detailed information for specific areas may be included as appendices to the plan.

(ii) For Antarctica, a vessel owner or operator must include a plan for prompt and effective response action to such emergencies as might arise in the performance of its vessel's activities.

(iii) To comply with paragraph (b)(5)(ii) of this section, an agency of the United States government may promulgate a directive providing for prompt and effective response by the agency's public vessels operating in Antarctica.

(6) *Appendices.* Appendices must include the following information:

(i) Twenty-four hour contact information and alternates to the designated contacts. These details must be routinely updated to account for personnel changes and changes in telephone, telex, and telefacsimile numbers. Clear guidance must also be provided regarding the preferred means of communication.

(ii) The following lists, each identified as a separate appendix:

(A) A list of agencies or officials of coastal state administrations responsible for receiving and processing incident reports;

(B) A list of agencies or officials in regularly visited ports. When this is not feasible, the master must obtain details concerning local reporting procedures upon arrival in port; and

(C) A list of all parties with a financial interest in the ship such as ship and cargo owners, insurers, and salvage interests.

(D) A list which specifies who will be responsible for informing the parties listed and the priority in which they must be notified.

(iii) A record of annual reviews and changes.

(7) *Non-mandatory provisions.* If this section is included by the shipowner, it should include the following types of information or any other information that may be appropriate:

(i) Diagrams;

(ii) Response equipment or oil spill removal organizations;

(iii) Public affairs practices;

(iv) Recordkeeping;

(v) Plan exercising; and

(vi) Individuals qualified to respond.

(8) *Index of sections*. The plan must be organized as depicted in Table 151.26(b)(8).

TABLE 151.26(b)(8)—INDEX OF SECTIONS—SAMPLE FORMAT

*Mandatory*

Section 1: Introduction
Section 2: Preamble
Section 3: Reporting requirements
Section 4: Steps to control a discharge
Section 5: National and local coordination
Section 6: Appendices

*Voluntary*

Section 7: Non-mandatory provisions

[CGD 93–030, 59 FR 51338, Oct. 7, 1994, as amended by CGD 97–015, 62 FR 18045, Apr. 14, 1997; USCG–2000–7641, 66 FR 55571, Nov. 2, 2001; USCG–2008–0179, 73 FR 35014, June 19, 2008]

### § 151.27 Plan submission and approval.

(a) No manned ship subject to this part may operate unless it carries on board a shipboard oil pollution emergency plan approved by the Coast Guard. An unmanned ship subject to this regulation must carry the notification list required in § 151.26(b)(3) on board in the documentation container; remaining sections of the plan must be maintained on file at the home office. For new ships, plans must be submitted at least 90 days before the ship intends to begin operations.

(b) An owner or operator of a ship to which this part applies shall prepare and submit one English language copy of the shipboard oil pollution emergency plan to Commandant (CG–5431), U.S. Coast Guard, 2100 2nd St., SW., Stop 7581, Washington, DC 20593–7581.

(c) An owner or operator with multiple ships to which this part applies may submit one plan for each type of ship with a separate ship-specific appendix for each vessel covered by the plan.

(d) Combined shipboard oil pollution emergency plans and response plans meeting the requirements of subparts D and E of part 155 of this chapter must be prepared according to § 155.1030(j) of this chapter.

(e) If the Coast Guard determines that the plan meets all requirements of this section, the Coast Guard will notify the owner or operator of the ship and return a copy of the approved plan along with an approval letter. The approval period for a plan expires 5 years after the plan approval date.

(f) If the Coast Guard determines that the plan does not meet all of the requirements, the Coast Guard will notify the owner or operator of the plan's deficiencies. The owner or operator must then resubmit two copies of the revised plan, or corrected portions of the plan, within time period specified in the written notice provided by the Coast Guard.

[CGD 93–030, 59 FR 51342, Oct. 7, 1994, as amended by CGD 96–026, 61 FR 33665, June 28, 1996; USCG–1998–3799, 63 FR 35530, June 30, 1998; USCG–2008–0179, 73 FR 35014, June 19, 2008; USCG–2010–0351, 75 FR 36284, June 25, 2010]

### § 151.28 Plan review and revision.

(a) An owner or operator of a ship to which this subpart applies must review the shipboard oil pollution emergency plan annually and submit a letter to Commandant (CG–5431) certifying that the review has been completed. This review must occur within 1 month of the anniversary date of Coast Guard approval of the plan.

(b) The owner or operator shall submit any plan amendments to Commandant (CG–5431) for information or approval.

(c) The entire plan must be resubmitted to Commandant (CG–5431) for reapproval 6 months before the end of the Coast Guard approval period identified in § 151.27(e) of this subpart.

(d) A record of annual review and changes to the plan must be maintained in the last appendix of section six of the plan.

(e) Except as provided in paragraph (f) of this section, revisions must receive prior approval by the Coast Guard before they can be incorporated into the plan.

(f) Revisions to the seventh section of the plan and the appendices do not require approval by the Coast Guard. The Coast Guard shall be advised and provided a copy of the revisions as they occur.

[CGD 93–030, 59 FR 51342, Oct. 7, 1994, as amended by CGD 96–026, 61 FR 33665, June 28, 1996; USCG–2008–0179, 73 FR 35014, June 19, 2008]

### § 151.29 Foreign ships.

(a) Each oil tanker of 150 gross tons and above and each other ship of 400 gross tons and above, operated under the authority of a country other than the United States that is party to MARPOL 73/78, shall, while in the navigable waters of the United States or while at a port or terminal under the jurisdiction of the United States, carry on board a shipboard oil pollution emergency plan approved by its flag state.

(b) Each oil tanker of 150 gross tons and above and each other ship of 400 gross tons and above, operated under the authority of a country that is not a party to MARPOL 73/78, must comply with § 151.21 of this subpart while in the navigable waters of the United States.

[CGD 93–030, 59 FR 51342, Oct. 7, 1994]

## NOXIOUS LIQUID SUBSTANCE POLLUTION

SOURCE: Sections 151.30 through 151.49 appear by CGD 85–010, 52 FR 7759, Mar. 12, 1987, unless otherwise noted.

### § 151.30 Applicability.

(a) Except as provided in paragraph (b) of this section, §§ 151.30 through 151.49 apply to each ship that—

(1) Is operated under the authority of the United States and engages in international voyages;

(2) Is operated under the authority of the United States and is certificated for ocean service;

(3) Is operated under the authority of the United States and is certificated for coastwise service beyond three nautical miles from land;

(4) Is operated under the authority of the United States and operates at any time seaward of the outermost boundary of the territorial sea of the United States as defined in § 2.22 of this chapter; or

(5) Is operated under the authority of a country other than the United States while in the navigable waters of the United States, or while at a port or terminal under the jurisdiction of the United States.

(b) Sections 151.30 through 151.49 do not apply to—

(1) A tank barge whose certificate is endorsed by the Coast Guard for a limited short protected coastwise route if the barge is constructed and certificated primarily for service on an inland route;

(2) A warship, naval auxiliary, or other ship owned or operated by a country when engaged in noncommercial service;

(3) A Canadian or U.S. ship being operated exclusively on the Great Lakes of North America or their connecting and tributary waters;

(4) A Canadian or U.S. ship being operated exclusively on the internal waters of the United States and Canada; or

(5) Any other ship specifically excluded by MARPOL 73/78.

NOTE TO § 151.30 (b)(4): The term ''internal waters'' is defined in § 2.24 of this chapter.

[CGD 88–002, 54 FR 18405, Apr. 28, 1989, as amended by CGD 88–002A, 55 FR 18582, May 2, 1990; USCG–2008–0179, 73 FR 35014, June 19, 2008]

### § 151.31 Where to find requirements applying to oceangoing ships carrying Category A, B, C, and D NLS.

(a) The requirements for oceangoing ships carrying NLSs listed in §§ 151.47 and 151.49 are in §§ 151.33 through 151.45.

(b) The requirements for oceangoing ships carrying NLSs listed in Table 151.05 of 46 CFR part 151 and Table 1 of 46 CFR part 153, which are not listed in § 151.47 or § 151.49, are in 46 CFR parts 98, 151, and 153.

(c) Alternatives to the requirements in this part for oceangoing ships carrying NLSs are in 46 CFR part 153.

(d) Procedures for obtaining permission to carry an NLS not listed in § 151.47, § 151.49, Table 151.05 of 46 CFR part 151, or Table 1 of 46 CFR part 153 are in 46 CFR 153.900(c).

### § 151.32 Special areas for the purpose of Annex II.

(a) For the purposes of §§ 151.30 through 151.49, the special areas are the Baltic Sea area, the Black Sea area, and the Antarctic area which are described in § 151.06. Discharges into the sea of NLSs or mixtures containing such substances are prohibited in the Antarctic area.

(b) In accordance with paragraph (13)(a) of Regulation 5 of Annex II of MARPOL 73/78, the discharge restrictions in § 151.32 for the Baltic Sea area and the Black Sea area will enter into effect when each Party to MARPOL 73/78 whose coastline borders the special area has certified that reception facilities are available and the IMO has established an effective date for each special area. Notice of the effective date for discharge requirements in these areas will be published in the FEDERAL REGISTER and reflected in this section.

[CGD 94–056, 60 FR 43378, Aug. 21, 1995]

### § 151.33 Certificates needed to carry Category C Oil-like NLS.

(a) A U.S. oceangoing ship may not carry a Category C oil-like NLS listed in § 151.49 in a cargo tank unless the ship has a Certificate of Inspection endorsed to allow the NLS to be carried in that cargo tank, and if the ship engages in a foreign voyage—

(1) An Attachment for NLSs to the IOPP Certificate, issued under § 151.37(a), that allows the NLS to be carried in that cargo tank; or

(2) A Certificate of Fitness issued under 46 CFR part 153 that allows the NLS to be carried in that cargo tank.

(b) A foreign oceangoing ship operating in the navigable waters of the U.S. may not carry a Category C oil-like NLS listed in § 151.49 in a cargo tank unless the ship has—

(1) An Attachment for NLSs to the IOPP Certificate that allows the NLS to be carried in that cargo tank; or

(2) A Certificate of Compliance issued under 46 CFR part 153 to allow the NLS to be carried in that cargo tank.

(c) A U.S. oceangoing ship authorized to carry certain dangerous cargoes in bulk under 46 CFR part 98 may not carry a Category C oil-like NLS listed in § 151.49 in a cargo tank unless the ship has a Certificate of Inspection endorsed to allow the NLS to be carried in that cargo tank, and if the ship engages in a foreign voyage, an NLS Certificate issued under § 151.37(b) that allows the NLS to be carried in that cargo tank.

### § 151.35 Certificates needed to carry Category D NLS and Category D Oil-like NLS.

(a) A U.S. oceangoing ship may not carry a Category D NLS listed in § 151.47 in a cargo tank unless the ship has a Certificate of Inspection endorsed to allow the NLS to be carried in that cargo tank, and if the ship engages if a foreign voyage—

(1) An NLS Certificate issued under § 151.37(b) to allow the NLS to be carried in that cargo tank; or

(2) A Certificate of Fitness issued under 46 CFR part 153 to allow the NLS to be carried in that cargo tank.

(b) A U.S. oceangoing ship may not carry a Category D oil-like NLS listed in § 151.49 in a cargo tank unless the ship has a Certificate of Inspection endorsed to allow the NLS to be carried in that cargo tank, and if the ship engages if a foreign voyage—

(1) An Attachment for NLSs to the IOPP Certificate, issued under § 151.37(a), to allow the NLS to be carried in that cargo tank; or

(2) An NLS Certificate issued under § 151.37(b) to allow the NLS to be carried in that cargo tank, or

(3) A Certificate of Fitness issued under 46 CFR part 153 to allow the NLS to be carried in that cargo tank.

(c) A foreign oceangoing ship in the navigable waters of the U.S. may not carry a Category D NLS listed in § 151.47 in a cargo tank unless the ship has one of the following:

(1) An NLS Certificate endorsed to allow the NLS to be carried in that cargo tank; or

(2) A Certificate of Compliance issued under 46 CFR part 153 to allow the NLS to be carried in that cargo tank.

(d) A foreign oceangoing ship in the navigable waters of the U.S. may not carry a Category D oil-like NLS listed in § 151.49 in a cargo tank unless the ship has one of the following:

(1) An Attachment for NLSs to the IOPP Certificate to allow the NLS to be carried in that cargo tank; or

(2) An NLS Certificate endorsed to allow the NLS to be carried in the cargo tank; or

(3) A Certificate of Compliance issued under 46 CFR part 153 to allow the NLS to be carried in the cargo tank.

(e) A U.S. oceangoing ship authorized to carry certain dangerous cargoes in bulk under 46 CFR part 98 may not carry a Category D NLS listed in § 151.47 or a Category D oil-like NLS listed in § 151.49 in a cargo tank unless the ship has a Certificate of Inspection endorsed to allow the NLS to be carried in that cargo tank, and if the ship engages in a foreign voyage, an NLS Certificate issued under § 151.37(b) that allows the NLS to be carried in that cargo tank.

### § 151.37 Obtaining an Attachment for NLSs to the IOPP Certificate and obtaining an NLS Certificate.

(a) The Coast Guard or a classification society authorized under 46 CFR part 8 issues an Attachment for NLSs to the IOPP Certificate to an oceangoing ship to allow the carriage of a Category C oil-like NLS or a Category D oil-like NLS if the following requirements are met:

(1) Except for ships that are not configured and are not equipped to ballast or wash cargo tanks while proceeding en route, the ship must have a Coast Guard approved monitor under § 157.12 that is approved for the cargoes that are desired to be carried.

(2) Except as required by paragraph (a)(3), ships of 150 meters or less in length carrying a Category C oil-like NLS must meet the damage stability requirements applying to a Type III hull as provided by Regulation 14 (c) of Annex II.

(3) A U.S. self propelled ship of 150 meters or less in length on a coastwise voyage carrying a Category C oil-like NLS must meet the damage stability requirements applying to a Type III hull as provided by 46 CFR part 172, subpart F except §§ 172.130 and 172.133.

(b) Except as allowed in paragraph (c) of this section, the Coast Guard or a classification society authorized under 46 CFR part 8 issues an NLS Certificate endorsed to allow the oceangoing ship engaged in a foreign voyage to carry a Category D NLS listed in § 151.47 if the ship has—

(1) An approved Procedures and Arrangements Manual and Cargo Record Book, both meeting the requirements in 46 CFR 153.490; and

(2) A residue discharge system meeting 46 CFR 153.470, unless the approved Procedures and Arrangements Manual limits discharge of Category D NLS residue to the alternative provided by 46 CFR 153.1128(b).

(c) The Coast Guard or a classification society authorized under 46 CFR part 8 issues a NLS Certificate with the statement that the vessel is prohibited from discharging NLS residues to the sea if the vessel does not meet 46 CFR 153.470 and 153.490 but meets 46 CFR subpart 98.31.

[CGD 75–124a, 48 FR 45709, Oct. 6, 1983, as amended by CGD 95–010, 62 FR 67532, Dec. 24, 1997]

### § 151.39 Operating requirements: Category D NLS.

The master or person in charge of an oceangoing ship that carries a Category D NLS listed in § 151.47 shall ensure that the ship is operated as prescribed for the operation of oceangoing ships carrying Category D NLSs in 46 CFR 153.901, 153.909, 153.1100, 153.1104, 153.1106, 153.1124, 153.1126, and 153.1128.

[CGD 85–010, 52 FR 7759, Mar. 12, 1987, as amended by USCG–2008–0179, 73 FR 35014, June 19, 2008]

### § 151.41 Operating requirements for oceangoing ships with IOPP Certificates: Category C and D Oil-like NLSs.

The master or person in charge of an oceangoing ship certificated under § 151.37(a) shall ensure that—

(a) The carriage and discharge of the oil-like NLS meets §§ 157.29, 157.31, 157.35, 157.37, 157.41, 157.45, 157.47, and 157.49 of this chapter; and

(b) The oil-like NLS is not discharged unless—

(1) The monitor required by § 151.37(a)(1) is set to detect the oil-like NLS; and

(2) A statement that the monitor has been set to detect the oil-like NLS is entered in the Oil Record Book Part

II(Cargo/Ballast Operations), required by § 151.25.

### § 151.43 Control of discharge of NLS residues.

(a) Unless the ship is a fixed or floating drilling rig or other platform operating under an National Pollution Discharge Elimination System (NPDES) permit, the master or person in charge of an oceangoing ship that cannot discharge NLS residue into the sea in accordance with 46 CFR 153.1126 or 153.1128 shall ensure that the NLS residue is—

(1) Retained on board; or

(2) Discharged to a reception facility.

(b) If Category A, B, or C NLS cargo or NLS residue is to be transfered at a port or terminal in the United States, the master or person in charge of each oceangoing ship carrying NLS cargo or NLS residue shall notify the port or terminal at least 24 hours before entering the port or terminal of—

(1) The name of the ship;

(2) The name, category and volume of NLS cargo to be unloaded;

(3) If the cargo is a Category B or C high viscosity NLS cargo or solidifying NLS cargo listed in Table 1 of 46 CFR part 153 with a reference to ''§ 153.908(a)'' or ''§ 153.908(b)'' in the ''Special Requirements'' column of that table, the time of day the ship is estimated to be ready to discharge NLS residue to a reception facility;

(4) If the cargo is any Category B or C NLS cargo not under paragraph (b)(3) of this section, whether or not the ship meets the stripping requirements under 46 CFR 153.480, 153.481, or 153.482;

(5) The name and the estimated volume of NLS in the NLS residue to be discharged;

(6) The total volume of NLS residue to be discharged; and

(7) The name and amount of any cleaning agents to be used during the prewash required by 46 CFR 153.1120.

(c) The master or person in charge of a U.S. ship in a special area shall operate the ship in accordance with 46 CFR 153.903.

NOTE: The master or person in charge of a ship carrying Category A NLS that is required to prewash tanks under the procedures in 46 CFR part 153.1120 is required under 46 CFR 153.1101 to notify the COTP at least 24 hours before a prewash surveyor is needed.

### § 151.47 Category D NLSs other than oil-like Category D NLSs that may be carried under this part.

The following is a list of Category D NLSs other than Oil-like Category D NLSs that the Coast Guard allows to be carried:

Acetophenone
Acrylonitrile-Styrene copolymer dispersion in Polyether polyol
iso- & cyclo-Alkane (C10–C11)
Alkenyl(C11+)amine
Alkyl(C8+)amine, Alkenyl (C12+) acid ester mixture
Alkyl dithiothiadiazole (C6–C24)
Alkyl ester copolymer (C4–C20)
Alkyl(C8–C40) phenol sulfide
Aluminum sulfate solution
Ammonium hydrogen phosphate solution
Ammonium nitrate solution (45% or less)
Ammonium nitrate, Urea solution (2% or less $NH_3$)
Ammonium phosphate, Urea solution
Ammonium polyphosphate solution
Ammonium sulfate solution (20% or less)
Amyl alcohol (iso-, n-, sec-, primary)
Animal and Fish oils, n.o.s. (*see also Oil, edible*)
Animal and Fish acid oils and distillates, n.o.s.
Aryl polyolefin (C11–C50)
Brake fluid base mixtures
Butylene glycol
iso-Butyl formate
n-Butyl formate
gamma-Butyrolactone
Calcium hydroxide slurry
Calcium long chain alkyl sulfonate (C11–C50)
Calcium long chain alkyl(C11–C40) phenate
Calcium long chain alkyl phenate sulfide (C8-C40)
Caprolactam solutions
Chlorine chloride solution
Citric acid (70% or less)
Coconut oil fatty acid methyl ester
Copper salt of long chain (C17+) alkanoic acid
Cyclohexanol
Decahydronaphthalene
Diacetone alcohol
Dialkyl(C8–C9) diphenylamines
Dialkyl(C7–C13) phthalates
Diethylene glycol
Diethylene glycol butyl ether acetate, *see* Poly(2-8) alkylene glycol monoalkyl(C1–C6) ether acetate
Diethylene glycol dibutyl ether
Diethylene glycol ethyl ether, *see* Poly(2–8)alkylene glycol monoalkyl(C1–C6) ether
Diethylene glycol ethyl ether acetate, *see* Poly(2–8)alkylene glycol monoalkyl(C1–C6) ether acetate

Diethylene glycol methyl ether acetate, *see* Poly(2–8)alkylene glycol monoalkyl(C1–C6) ether acetate
Diethylene glycol phenyl ether
Diethylene glycol phthalate
Di-(2-ethylhexyl)adipate
1,4-Dihydro-9,10-dihydroxy anthracene, disodium salt solution
Diisobutyl ketone
*Diisodecyl phthalate, see* Dialkyl(C7–C13) phthalates
Diisononyl adipate
*Diisononyl phthalate, see* Dialkyl(C7–C13) phthalates
2,2-Dimethylpropane-1,3-diol
*Dinonyl phthalate, see* Dialkyl(C7–C13) phthalates
Dipropylene glycol dibenzoate
Dipropylene glycol methyl ether, *see* Poly(2–8)alkylene glycol monoalkyl(C1-C6) ether
*Ditridecyl phthalate, see* Dialkyl(C7–C13) phthalates
*Diundecyl phthalate, see* Dialkyl(C7–C13) phthalates
Dodecenylsuccinic acid, dipotassium salt solution
Ethoxylated long chain (C16+) alkyloxyalkanamine
Ethoxy triglycol (*crude*)
2-Ethyl-2-(hydroxymethyl)propane-1,3-diol, C8–C10 ester
Ethyl acetate
Ethyl acetoacetate
Ethyl butanol
Ethylenediaminetetraacetic acid, tetrasodium salt solution
Ethylene glycol
Ethylene glycol acetate
Ethylene glycol dibutyl ether
Ethylene glycol methyl butyl ether
Ethylene glycol phenyl ether
Ethylene glycol phenyl ether, Diethylene glycol phenyl ether mixture
*2-Ethylhexanoic acid, see* Octanoic acid
Ethyl propionate
Ferric hydroxyethylethylene diamine triacetic acid, trisodium salt solution
Formamide
Glycerine (83%), Dioxanedimethanol (17%) mixture
Glycerol monooleate
Glyoxal solution (40% or less)
Glyphosate solution (not containing surfactant)
Heptanoic acid
Hexamethylenediamine adipate
Hexamethylenetetramine solutions
Hexanoic acid
Hexanol
N–(Hydroxyethyl)ethylenediamine triacetic acid, trisodium salt solution
Isophorone
Lactic acid
Latex (ammonia (1% or less) inhibited)
Long chain alkaryl sulfonic acid (C16–C60)
Magnesium long chain alkaryl sulfonate (C11–C50)
Magnesium long chain alkyl phenate sulfide (C8–C20)
3-Methoxybutyl acetate
Methyl acetoacetate
Methyl alcohol
Methyl amyl ketone
Methyl butenol
Methyl butyl ketone
Methyl isobutyl ketone
Methyl tert-butyl ether
Methyl butynol
Methyl propyl ketone
N-Methyl-2-pyrrolidone
Myrcene
Naphthalene sulfonic acid-formaldehyde copolymer, sodium salt solution
Nonanoic acid (all isomers)
Nonanoic, Tridecanoic acid mixture
Nonyl methacrylate
Noxious Liquid Substance, (17) n.o.s.
Octadecenoamide solution
Octanoic acid
Oil, edible:
Babassu
Beechnut
Castor
Cocoa butter
Coconut
Cod liver
Corn
Cottonseed
Fish
Groundnut
Hazelnut
Nutmeg butter
Olive
Palm
Palm kernel
Peanut
Poppy
Raisin seed
Rapeseed
Rice bran
Safflower
Salad
Sesame
Soya bean
Sunflower seed
Tucum
Vegetable
Walnut
Oil, misc:
Animal, n.o.s.
Coconut oil, esterified
Coconut oil, fatty acid methyl ester
Lanolin
Linseed
Neatsfoot
Oiticica
Palm oil, fatty acid methyl ester
Palm oil, methyl ester
Perilla
Pilchard
Soya bean (epoxidized)
Sperm
Tung
Whale

Olefin/Alkyl ester copolymer (molecular weight 2000+)
Oleic acid
Palm kernel acid oil, methyl ester
Palm stearin
Pentaethylenehexamine
Pentanoic acid
Poly(2–8)alkylene glycol monoalkyl(C1-C6) ether, *Including:*
  Diethylene glycol butyl ether
  Diethylene glycol ethyl ether
  Diethylene glycol n-hexyl ether
  Diethylene glycol methyl ether
  Diethylene glycol n-propyl ether
  Dipropylene glycol butyl ether
  Dipropylene glycol methyl ether
  Polypropylene glycol methyl ether
  Triethylene glycol butyl ether
  Triethylene glycol ethyl ether
  Triethylene glycol methyl ether
  Tripropylene glycol methyl ether
Poly(2–8)alkylene glycol monoalkyl(C1–C6) ether acetate, *Including:*
  Diethylene glycol butyl ether acetate
  Diethylene glycol ethyl ether acetate
  Diethylene glycol methyl ether acetate
Polyalkylene glycols, Polyalkylene glycol monoalkyl ethers mixtures
Polypropylene glycol methyl ether, *see* Poly(2–8)alkylene glycol monoalkyl(C1–C6) ether
Polyalkyl(C10–C20) methacrylate
Polybutenyl succinimide
Polyether (molecular weight 2000+)
Polyethylene glycol monoalkyl ether
Polyolefin amide alkeneamine (C17+)
Polyolefin amide alkeneamine (C28+)
Polyolefin amide alkeneamine borate (C28–C250)
Polyolefin amide alkeneamine polyol
Polyolefin anhydride
Polyolefin ester (C28–C250)
Polyolefin phenolic amine (C28–C250)
Polyolefin phosphorosulfide, barium derivative
Polypropylene glycol
n-Propyl acetate
Propylene glycol monoalkyl ether, Including:
  n-Propoxypropanol
  Propylene glycol n-butyl ether
  Propylene glycol ethyl ether
  Propylene glycol methyl ether
Propylene glycol ethyl ether, see Propylene glycol monoalkyl ether
Propylene glycol methyl ether, see Propylene glycol monoalkyl ether
Propylene glycol methyl ether acetate
Propylene glycol phenyl ether
Sodium acetate solution
Sodium benzoate solution
Sodium carbonate solution
Soybean oil (epoxidized)
Sulfohydrocarbon (C3–C88)
Sulfonated polyacrylate solution
Sulfolane
Sulfurized fat (C14–C20)
Sulfurized polyolefinamide alkene(C28–C250)amine
Tallow
Tallow fatty acid
Tetrasodium salt of Ethylenediaminetetraacetic acid solution
Triethylene glycol butyl ether, see Poly(2–8)alkylene glycol monoalkyl(C1–C6) ether
Triethylene glycol ethyl ether, see Poly(2–8)alkylene glycol monoalkyl(C1–C6) ether
Triethylene glycol methyl ether, see Poly(2–8)alkylene glycol monoalkyl(C1–C6) ether
Triethyl phosphate
Trimethylol propane polyethoxylate
Tripropylene glycol methyl ether, see Poly(2–8)alkylene glycol monoalkyl(C1–C6) ether
Trisodium salt of N-(Hydroxyethyl)-ethylenediamine triacetic acid solution
Urea, Ammonium mono- and di-hydrogen phosphate, Potassium chloride solution
Urea, Ammonium nitrate solution (2% or less $NH_3$)
Urea, Ammonium phosphate solution
Vegetable oils, n.o.s. (see also Oil, edible)
Vegetable acid oils and distillates, n.o.s.
Waxes:
  Candelilla
  Carnauba

[CGD 85–010, 52 FR 7759, Mar. 12, 1987, as amended by CGD 88–100a, 54 FR 40000, Sept. 29, 1989; 55 FR 17269, Apr. 24, 1990; CGD 92–100a, 59 FR 16986, Apr. 11, 1994; CGD 94–901, 59 FR 45147, Aug. 31, 1994; CGD 95–901, 60 FR 34039, June 29, 1995; USCG 2000–7079, 65 FR 67155, Nov. 8, 2000]

### § 151.49 Category C and D Oil-like NLSs allowed for carriage.

The following is a list of Category C and D Oil-like NLSs that the Coast Guard allows to be carried:

(a) The following Category C oil-like NLSs may be carried:

Aviation alkylates
Cycloheptane
Cyclohexane
Cyclopentane
p-Cymene
Ethylcyclohexane
Heptane (all isomers)
Heptene (all isomers)
Hexane (all isomers)
Hexene (all isomers)
iso-Propylcyclohexane
Methyl cyclohexane
2-Methyl-1-pentene, *see* Hexene (all isomers)
Nonane (all isomers)
Octane (all isomers)
Olefin mixtures (C5–C7)
Pentane (all isomers)
Pentene (all isomers)
1-Phenyl-1-xylylethane
Propylene dimer
Tetrahydronaphthalene

Toluene
Xylenes

(b) [Reserved]

[CGD 85–010, 52 FR 7759, Mar. 12, 1987, as amended by CGD 88–100a, 54 FR 40001, Sept. 29, 1989; 55 FR 17269, Apr. 24, 1990; CGD 92–100a, 59 FR 16987, Apr. 11, 1994; CGD 94–901, 59 FR 45148, Aug. 31, 1994; CGD 95–901, 60 FR 34039, June 29, 1995; USCG 2000–7079, 65 FR 67157, Nov. 8, 2000; USCG–2008–0179, 73 FR 35014, June 19, 2008]

GARBAGE POLLUTION AND SEWAGE

SOURCE: Sections 151.51 through 151.77 and Appendix A appear by CGD 88–002, 54 FR 18405, Apr. 28, 1989, unless otherwise noted.

### § 151.51 Applicability.

(a) Except as provided by paragraph (b) of this section, §§151.51 through 151.77 apply to—

(1) Each ship that is of United States registry or nationality, or one operated under the authority of the United States, including recreational vessels defined in 46 U.S.C. 2101(25) and uninspected vessels defined in 46 U.S.C. 2101(43), wherever located; and

(2) Each ship, other than a ship referred to in paragraph (a)(1) of this section, while in the navigable waters or the Exclusive Economic Zone of the United States.

(b) Sections 151.51 through 151.77 do not apply to—

(1) A warship, naval auxiliary, or other ship owned or operated by the United States when engaged in noncommercial service; or

(2) Any other ship specifically excluded by MARPOL 73/78.

NOTE: The Exclusive Economic Zone extends from the baseline of the territorial sea seaward 200 miles as defined in the Presidential Proclamation 5030 of March 10, 1983 (3 CFR, 1983 Comp. p. 22).

[CGD 88–002, 54 FR 18405, Apr. 28, 1989, as amended by CGD 88–002A, 55 FR 18582, May 2, 1990]

### § 151.53 Special areas for Annex V of MARPOL 73/78.

(a) For the purposes of §§151.51 through 151.77, the special areas are the Mediterranean Sea area, the Baltic Sea area, the Black Sea area, the Red Sea area, the Gulfs area, the North Sea area, the Antarctic area, and the Wider Caribbean region, including the Gulf of Mexico and the Caribbean Sea which are described in §151.06.

(b) In accordance with paragraph (4)(b) of Regulation 5 of Annex V of MARPOL 73/78, the discharge restrictions in §151.71 for special areas will enter into effect when each party to MARPOL 73/78 whose coastline borders the special area has certified that reception facilities are available and the IMO has established an effective date for each special area. Notice of the effective dates for the discharge requirements in each special area will be published in the FEDERAL REGISTER and reflected in this section.

(c) The discharge restrictions are in effect in the Mediterranean Sea, Baltic Sea, the North Sea, the Gulfs and the Antarctic special areas.

[CGD 94–056, 60 FR 43378, Aug. 21, 1995, as amended by USCG–2009–0273, 74 FR 66241, Dec. 15, 2009]

### § 151.55 Recordkeeping requirements.

(a) This section applies to the following:

(1) Every manned oceangoing ship (other than a fixed or floating platform) of 400 gross tons and above that is engaged in commerce and that is documented under the laws of the United States or numbered by a State.

(2) Every manned fixed or floating platform subject to the jurisdiction of the United States.

(3) Every manned ship that is certified to carry 15 passengers or more engaged in international voyages.

(b) The master or person in charge of each ship under paragraph (a)(1), (a)(2), or (a)(3) of this section shall ensure that a written record is maintained on the ship of each of the following garbage discharge or disposal operations:

(1) Discharge overboard.

(2) Discharge to another ship.

(3) Discharge to a reception facility.

(4) Incineration on the ship.

(c) The record under paragraph (b) of this section must contain the following information on each discharge or disposal operation:

(1) The type of operation as described under paragraphs (b)(1) through (b)(4) of this section.

(2) The date and time of the operation.

(3) If the operation was conducted at a port, the name of the port.

(4) If the operation was not conducted at a port, the latitude and longitude of the location where the operation was conducted and the estimated distance of that location from shore. If the operation involved off-loading to another ship, the identity of the receiving ship by name and official number.

(5) The amount of garbage involved, described by volume in cubic meters.

(6) For discharges into the sea, a description of the contents of the garbage, described by the following categories:

(i) Plastic material.

(ii) Floating dunnage, lining, or packing material.

(iii) Ground paper products, rags, glass, metal, bottles, crockery, or other similar garbage.

(iv) Unground paper products, rags, glass, metal, bottles, crockery, or other similar garbage.

(v) Victual wastes.

(vi) Incinerated ash.

(vii) Incinerated plastic residue.

(d) The record under paragraph (b) of this section must be prepared at the time of the operation, certified as correct by the master or person in charge of the ship, maintained on the ship for two years following the operation, and made available for inspection by the Coast Guard.

[CGD 92–71, 59 FR 18703, Apr. 19, 1994, as amended by USCG–2000–7641, 66 FR 55571, Nov. 2, 2001]

### § 151.57 Waste management plans.

(a) This section applies to the following:

(1) Each manned oceangoing ship (other than a fixed or floating platform) of 40 feet or more in length that is documented under the laws of the United States or numbered by a state and that either is engaged in commerce or is equipped with a galley and berthing.

(2) Each manned fixed or floating platform that is—

(i) Documented under the laws of the United States; or

(ii) Operating under the authority of the United States, including, but not limited to, a lease or permit issued by an agency of the United States.

(b) The master or person in charge of a ship under paragraphs (a)(1) and (a)(2) of this section shall ensure that the ship is not operated unless a waste management plan meeting paragraph (c) of this section is on the ship and that each person handling garbage follows the plan.

(c) Each waste management plan under paragraph (b) of this section must be in writing and—

(1) Provide for the discharge of garbage by means that meet Annex V of MARPOL 73/78, the Act, and §§ 151.51 through 151.77;

(2) Describe procedures for collecting, processing, storing, and discharging garbage; and

(3) Designate the person who is in charge of carrying out the plan.

(Approved by the Office of Management and Budget under control number 1625–0072)

[CGD 88–002A, 55 FR 18582, May 2, 1990, as amended by USCG–2006–25150, 71 FR 39209, July 12, 2006]

### § 151.59 Placards.

(a) This section applies to the following:

(1) Each manned U.S. ship (other than a fixed or floating platform) that is 26 feet or more in length.

(2) Each manned floating platform in transit that is—

(i) Documented under the laws of the United States; or

(ii) Operating under the authority of the United States, including, but not limited to, a lease or permit issued by an agency of the United States.

(b) The master or person in charge of each ship under paragraph (a)(1) or (a)(2) of this section shall ensure that one or more placards meeting the requirements of this section are displayed in prominent locations and in sufficient numbers so that they can be read by the crew and passengers. These locations must be readily accessible to the intended reader and may include embarkation points, food service facilities, garbage handling spaces, and common spaces on deck. If the Captain of the Port determines that the number or location of the placards is insufficient to adequately inform crew and passengers, the Captain of the Port may require additional placards and may specify their locations.

(c) Each placard must be at least nine inches wide by four inches high, made of a durable material, and lettered with letters at least ⅛ inch high.

(d) Except as under paragraph (e) of this section, the placard must notify the reader of the following:

(1) The discharge of plastic or garbage mixed with plastic into any waters is prohibited.

(2) The discharge of all garbage is prohibited in the navigable waters of the United States and, in all other waters, within three nautical miles of the nearest land.

(3) The discharge of dunnage, lining, and packing materials that float is prohibited within 25 nautical miles of the nearest land.

(4) Other unground garbage may be discharged beyond 12 nautical miles from the nearest land.

(5) Other garbage ground to less than one inch may be discharged beyond three nautical miles of the nearest land.

(6) A person who violates the above requirements is liable for a civil penalty for each violation, and the criminal penalties of a class D felony. Placards installed on vessels before May 7, 1997, need not be replaced; and existing stocks of placards, containing previous language, may be used. When language on a placard is inconsistent with the language in the Code of Federal Regulations (CFR) due to use of a placard containing previous language penalty amounts contained in the CFR are controlling.

(7) Regional, State, and local restrictions on garbage discharges also may apply.

(e) For ships while operating on the Great Lakes or their connecting or tributary waters, the placard must—

(1) Notify the reader of the information in paragraph (d) of this section; or

(2) Notify the reader of the following:

(i) The discharge of all garbage into the Great Lakes or their connecting or tributary waters is prohibited.

(ii) A person who violates the above requirements is liable for a civil penalty for each violation, and the criminal penalties of a class D felony. Placards installed on vessels before May 7, 1997, need not be replaced; and existing stocks of placards, containing previous language, may be used. When language on a placard is inconsistent with the language in the Code of Federal Regulations (CFR) due to use of a placard containing previous language, penalty amounts contained in the CFR are controlling.

[CGD 88–002A, 56 FR 8880, Mar. 1, 1991, as amended by CGD 96–052, 62 FR 16703, Apr. 8, 1997; 62 FR 31340, June 9, 1997]

### § 151.61 Inspection for compliance and enforcement.

While within the navigable waters of the United States or the Exclusive Economic Zone, a ship is subject to inspection by the Coast Guard or other authorized federal agency to determine if—

(a) The ship has been operating in accordance with these regulations and has not discharged plastics or other garbage in violation of the provisions of the Act or Annex V of MARPOL 73/78;

(b) Grinders or comminuters used for the discharge of garbage between 3 and 12 nautical miles from nearest land are capable of reducing the size of garbage so that it will pass through a screen with openings no greater than 25 millimeters (one inch);

(c) Information for recordkeeping requirements, when required under § 151.55, is properly and accurately logged;

(d) A waste management plan, when required under § 151.57, is on board and that the condition of the ship, equipment and operational procedures of the ship meet the plan; and

(e) Placards, when required by § 151.59, are posted on board.

[CGD 88–002, 54 FR 18405, Apr. 28, 1989, as amended by CGD 88–002A, 55 FR 18583, May 2, 1990]

### § 151.63 Shipboard control of garbage.

(a) The master, operator, or person who is in charge of a ship shall ensure that all garbage is discharged ashore or in accordance with §§ 151.66–151.73.

(b) The following factors, among others, may be considered by enforcement personnel in evaluating compliance with §§ 151.51 through 151.77:

(1) Records, including receipts, of garbage discharges at port reception facilities.

(2) Records under § 151.55 or log entries of garbage discharges.

(3) The presence and operability of equipment to treat ship-generated garbage, including, but not limited to, incinerators, grinders, or comminuters.

(4) The presence of and adherence to a written shipboard waste management plan.

(5) The absence of plastics in ship stores.

(6) Ongoing educational programs to train shipboard personnel of garbage handling procedures and the need for these.

(7) The presence of shipboard spaces used for collecting, processing, storing and discharging ship-generated garbage.

(c) The master, operator, or person who is in charge of a ship shall ensure that if garbage is transported from a ship by shipboard personnel, it is properly deposited into a port or terminal's reception facility.

[CGD 88–002, 54 FR 18405, Apr. 28, 1989, as amended by CGD 88–002A, 55 FR 18583, May 2, 1990; CGD 92–71, 59 FR 18703, Apr. 19, 1994]

### § 151.65 Reporting requirements.

The master or person who is in charge of each oceangoing ship shall notify the port or terminal, at least 24 hours before entering the port or terminal, of the name of the ship and the estimated volume of garbage requiring disposal, if any of the following types of garbage are to be discharged:

(a) Garbage regulated by the Animal and Plant Health Inspection Service (APHIS) of the U.S. Department of Agriculture under 7 CFR 330.400 or 9 CFR 94.5.

(b) Medical wastes.

(c) Hazardous wastes defined in 40 CFR 261.3.

### § 151.66 Operating requirements: Discharge of garbage in the Great Lakes and other navigable waters.

(a) Except as otherwise provided in this section, no person on board any ship may discharge garbage into the navigable waters of the United States.

(b) On the United States' waters of the Great Lakes, commercial ships, excluding non-self propelled barges that are not part of an integrated tug and barge unit, may discharge bulk dry cargo residues in accordance with this paragraph and paragraph (c) of this section. Owners and operators of ships to which these paragraphs apply are encouraged to minimize the volume of dry cargo residues discharged through the use of suitable residue control measures onboard and by loading and unloading cargo at facilities that use suitable shoreside residue control measures. As used in this paragraph and paragraph (c) of this section:

*Apostle Islands National Lakeshore* means the site on or near Lake Superior administered by the National Park Service, less Madeline Island, and including the Wisconsin shoreline of Bayfield Peninsula from the point of land at 46°57′19.7″ N, 90°52′51.0″ W southwest along the shoreline to a point of land at 46°52′56.4″ N, 91°3′3.1″ W.

*Bulk dry cargo residues* means nonhazardous and non-toxic residues of dry cargo carried in bulk, including limestone and other clean stone, iron ore, coal, salt, and cement. It does not include residues of any substance known to be toxic or hazardous, such as, nickel, copper, zinc, lead, or materials classified as hazardous in provisions of law or treaty;

*Caribou Island and Southwest Bank Protection Area* means the area enclosed by rhumb lines connecting the following coordinates, beginning on the northernmost point and proceeding clockwise:

| | |
|---|---|
| 47°30.0′ N | 85°50.0′ W |
| 47°24.2′ N | 85°38.5′ W |
| 47°04.0′ N | 85°49.0′ W |
| 47°05.7′ N | 85°59.0′ W |
| 47°18.1′ N | 86°05.0′ W |

*Detroit River International Wildlife Refuge* means the U.S. waters of the Detroit River bound by the area extending from the Michigan shore at the southern outlet of the Rouge River to 41°54′ N, 083°06′ W along the U.S.-Canada boundary southward and clockwise connecting points:

| | |
|---|---|
| 42°02′ N | 083°08′ W |
| 41°54′ N | 083°06′ W |
| 41°50′ N | 083°10′ W |
| 41°44.52 N | 083°22′ W |
| 41°44.19 N | 083°27′ W |

*Grand Portage National Monument* means the site on or near Lake Superior, administered by the National

Park Service, from a southwest corner of the monument point of land, 47°57.521′ 89°41.245′, to the northeast corner of the monument point of land, 47°57.888′ 89°40.725′.

*Indiana Dunes National Lakeshore* means the site on or near Lake Michigan, administered by the National Park Service, from a point of land near Gary, Indiana at 41°42′59.4″ N 086°54′59.9″ W eastward along the shoreline to 41°37′08.8″ N 087°17′18.8″ W near Michigan City, Indiana.

*Integrated tug and barge unit* means any tug barge combination which, through the use of special design features or a specially designed connection system, has increased seakeeping capabilities relative to a tug and barge in the conventional pushing mode;

*Isle Royale National Park* means the site on or near Lake Superior, administered by the National Park Service, where the boundary includes any submerged lands within the territorial jurisdiction of the United States within four and one-half miles of the shoreline of Isle Royale and the surrounding islands, including Passage Island and Gull Island.

*Mile* means a statute mile, and refers to the distance from the nearest land or island;

*Milwaukee Mid-Lake Special Protection Area* means the area enclosed by rhumb lines connecting the following coordinates, beginning on the northernmost point and proceeding clockwise:

| | |
|---|---|
| 43°27.0′ N | 87°14.0′ W |
| 43°21.2′ N | 87°02.3′ W |
| 43°03.3′ N | 87°04.8′ W |
| 42°57.5′ N | 87°21.0′ W |
| 43°16.0′ N | 87°39.8′ W |

*Northern Refuge* means the area enclosed by rhumb lines connecting the coordinates, beginning on the northernmost point and proceeding clockwise:

| | |
|---|---|
| 45°45′ N | 86°00′ W, |

western shore of High Island, southern shore of Beaver Island:

| | |
|---|---|
| 45°30′ N | 85°30′ W |
| 45°30′ N | 85°15′ W |
| 45°25′ N | 85°15′ W |
| 45°25′ N | 85°20′ W |
| 45°20′ N | 85°20′ W |
| 45°20′ N | 85°40′ W |
| 45°15′ N | 85°40′ W |
| 45°15′ N | 85°50′ W |
| 45°10′ N | 85°50′ W |
| 45°10′ N | 86°00′ W |

*Pictured Rocks National Lakeshore means* the site on or near Lake Superior, administered by the National Park Service, from a point of land at 46°26′21.3″ N 086°36′43.2″ W eastward along the Michigan shoreline to 46°40′22.2″ N 085°59′58.1″ W.

*Six Fathom Scarp Mid-Lake Special Protection Area* means the area enclosed by rhumb lines connecting the following coordinates, beginning on the northernmost point and proceeding clockwise:

| | |
|---|---|
| 44°55′ N | 82°33′ W |
| 44°47′ N | 82°18′ W |
| 44°39′ N | 82°13′ W |
| 44°27′ N | 82°13′ W |
| 44°27′ N | 82°20′ W |
| 44°17′ N | 82°25′ W |
| 44°17′ N | 82°30′ W |
| 44°28′ N | 82°40′ W |
| 44°51′ N | 82°44′ W |
| 44°53′ N | 82°44′ W |
| 44°54′ N | 82°40′ W |

*Sleeping Bear Dunes National Lakeshore* means the site on or near Lake Michigan, administered by the National Park Service, that includes North Manitou Island, South Manitou Island and the Michigan shoreline from a point of land at 44°42′45.1″ N 086°12′18.1″ W north and eastward along the shoreline to 44°57′12.0″ N 085°48′12.8″ W.

*Stannard Rock Protection Area* means the area within a 6 mile radius from Stannard Rock Light, at 47°10′57″ N 87°13′34″ W;

*Superior Shoal Protection Area* means the area within a 6 mile radius from the center of Superior Shoal, at 48°03.2′ N 87°06.3′ W;

*Thunder Bay National Marine Sanctuary* means the site on or near Lake Huron designated by the National Oceanic and Atmospheric Administration as the boundary that forms an approximately rectangular area by extending along the ordinary high water mark between the northern and southern boundaries of Alpena County, cutting across the mouths of rivers and streams, and lakeward from those points along latitude lines to longitude

83 degrees west. The coordinates of the boundary are:

| | |
|---|---|
| 45°12′25.5″ N | 83°23′18.6″ W |
| 45°12′25.5″ N | 83°00′00″ W |
| 44°51′30.5″ N | 83°00′00″ W |
| 44°51′30.5″ N | 83°19′17.3″ W |

*Waukegan Special Protection Area* means the area enclosed by rhumb lines connecting the following coordinates, beginning on the northernmost point and proceeding clockwise:

| | |
|---|---|
| 42°24.3′ N | 87°29.3′ W |
| 42°13.0′ N | 87°25.1′ W |
| 42°12.2′ N | 87°29.1′ W |
| 42°18.1′ N | 87°33.1′ W |
| 42°24.1′ N | 87°32.0′ W; and |

*Western Basin* means that portion of Lake Erie west of a line due south from Point Pelee.

TABLE 151.66(b)—BULK DRY CARGO RESIDUE DISCHARGES ALLOWED ON THE GREAT LAKES

| Location | Cargo | Discharge allowed except as noted |
|---|---|---|
| Tributaries, their connecting rivers, and St. Lawrence River. | Limestone and other clean stone. | Prohibited where there is an apparent impact on wetlands, fish spawning areas, and potable water intakes. |
| | All other cargos | Prohibited. |
| Lake Ontario | Limestone and other clean stone. | Prohibited where there is an apparent impact on wetlands, fish spawning areas, and potable water intakes. |
| | Iron ore | Prohibited within 6 miles from shore. |
| | All other cargos | Prohibited within 13.8 miles from shore. |
| Lake Erie | Limestone and other clean stone. | Prohibited where there is an apparent impact on wetlands, fish spawning areas, and potable water intakes; prohibited in the Detroit River International Wildlife Refuge; prohibited in Western Basin, except that a vessel operating exclusively within Western Basin may discharge limestone or clean stone cargo residues over the dredged navigation channels between Toledo Harbor Light and Detroit River Light. |
| | Iron ore | Prohibited within 6 miles from shore; prohibited in the Detroit River International Wildlife Refuge; prohibited in Western Basin, except that a vessel may discharge residue over the dredged navigation channels between Toledo Harbor Light and Detroit River Light if it unloads in Toledo or Detroit and immediately thereafter loads new cargo in Toledo, Detroit, or Windsor. |
| | Coal, salt | Prohibited within 13.8 miles from shore; prohibited in the Detroit River International Wildlife Refuge; prohibited in Western Basin, except that a vessel may discharge residue over the dredged navigation channels between Toledo Harbor Light and Detroit River Light if it unloads in Toledo or Detroit and immediately thereafter loads new cargo in Toledo, Detroit, or Windsor. |
| | All other cargos | Prohibited within 13.8 miles from shore; prohibited in the Detroit River International Wildlife Refuge; prohibited in Western Basin. |
| Lake St. Clair | Limestone and other clean stone. | Prohibited where there is an apparent impact on wetlands, fish spawning areas, and potable water intakes. |
| | All other cargos | Prohibited. |
| Lake Huron except Six Fathom Scarp Mid-Lake Special Protection Area. | Limestone and other clean stone. | Prohibited where there is an apparent impact on wetlands, fish spawning areas, and potable water intakes; prohibited in the Thunder Bay National Marine Sanctuary. |
| | Iron ore | Prohibited within 6 miles from shore and in Saginaw Bay; prohibited in the Thunder Bay National Marine Sanctuary; prohibited for vessels up bound along the Michigan thumb as follows:<br>(1) Between 5.8 miles northeast of entrance buoys 11 and 12 to the track line turn abeam of Harbor Beach, prohibited within 3 miles from shore; and<br>(2) For vessels bound for Saginaw Bay only, between the track line turn abeam of Harbor Beach and 4 nautical miles northeast of Point Aux Barques Light, prohibited within 4 miles from shore and not less than 10 fathoms of depth. |
| | Coal, salt | Prohibited within 13.8 miles from shore and in Saginaw Bay; prohibited in the Thunder Bay National Marine Sanctuary; prohibited for vessels up bound from Alpena into ports along the Michigan shore south of Forty Mile Point within 4 miles from shore and not less than 10 fathoms of depth. |
| | All other cargos | Prohibited within 13.8 miles from shore and in Saginaw Bay; prohibited in the Thunder Bay National Marine Sanctuary. |

TABLE 151.66(b)—BULK DRY CARGO RESIDUE DISCHARGES ALLOWED ON THE GREAT LAKES—Continued

| Location | Cargo | Discharge allowed except as noted |
|---|---|---|
| Lake Michigan | Limestone and other clean stone. | Prohibited where there is an apparent impact on wetlands, fish spawning areas, and potable water intakes; prohibited within the Milwaukee Mid-Lake and Waukegan Special Protection Areas; prohibited within the Northern Refuge; prohibited within 3 miles of the shore of the Indiana Dunes and Sleeping Bear National Lakeshores; prohibited within Green Bay. |
| | Iron ore | Prohibited in the Northern Refuge; north of 45° N, prohibited within 12 miles from shore and in Green Bay; south of 45° N, prohibited within 6 miles from shore, and prohibited within the Milwaukee Mid-Lake and Waukegan Special Protection Areas, in Green Bay, and within 3 miles of the shore of Indiana Dunes and Sleeping Bear National Lakeshores; except that discharges are allowed at:<br>(1) 4.75 miles off Big Sable Point Betsie, along established Lake Carriers Association (LCA) track lines; and<br>(2) Along 056.25° LCA track line between due east of Poverty Island to a point due south of Port Inland Light. |
| | Coal | Prohibited in the Northern Refuge; prohibited within 13.8 miles from shore and prohibited within the Milwaukee Mid-Lake and Waukegan Special Protection Areas, in Green Bay, and within 3 miles of the shore of Indiana Dunes and Sleeping Bear National Lakeshores; except that discharges are allowed:<br>(1) Along 013.5° LCA track line between 45° N and Boulder Reef, and along 022.5° LCA track running 23.25 miles between Boulder Reef and the charted position of Red Buoy #2;<br>(2) Along 037° LCA track line between 45°20′ N and 45°42′ N;<br>(3) Along 056.25° LCA track line between points due east of Poverty Island to a point due south of Port Inland Light; and<br>(4) At 3 miles from shore for coal carried between Manistee and Ludington along customary routes. |
| | Salt | Prohibited in the Northern Refuge; prohibited within 13.8 miles from shore and prohibited within the Milwaukee Mid-Lake and Waukegan Special Protection Areas, in Green Bay, and within 3 miles of the shore of Indiana Dunes and Sleeping Bear National Lakeshores, and in Green Bay. |
| | All other cargos | Prohibited in the Northern Refuge; prohibited within 13.8 miles from shore and prohibited within the Milwaukee Mid-Lake and Waukegan Special Protection Areas, in Green Bay, and within 3 miles of the shore of Indiana Dunes and Sleeping Bear National Lakeshores. |
| Lake Superior | Limestone and other clean stone. | Prohibited where there is an apparent impact on wetlands, fish spawning areas, and potable water intakes; and prohibited within Isle Royal National Park and the Caribou Island and Southwest Bank, Stannard Rock, and Superior Shoal Protection Areas, and within 3 miles of the shore of the Apostle Islands and Pictured Rocks National Lakeshores or the Grand Portage National Monument. |
| | Iron ore | Prohibited within 6 miles from shore (within 3 miles off northwestern shore between Duluth and Grand Marais); and prohibited within Isle Royal National Park and the Caribou Island and Southwest Bank, Stannard Rock, and Superior Shoal Protection Areas, and within 3 miles of the shore of the Apostle Islands and Pictured Rocks National Lakeshores or the Grand Portage National Monument. |
| | Coal, salt | Prohibited within 13.8 miles from shore (within 3 miles off northwestern shore between Duluth and Grand Marais); and prohibited within Isle Royal National Park and the Caribou Island and Southwest Bank, Stannard Rock, and Superior Shoal Protection Areas, and within 3 miles of the shore of the Apostle Islands and Pictured Rocks National Lakeshores or the Grand Portage National Monument. |

TABLE 151.66(b)—BULK DRY CARGO RESIDUE DISCHARGES ALLOWED ON THE GREAT LAKES—Continued

| Location | Cargo | Discharge allowed except as noted |
|---|---|---|
| | Cement | Prohibited within 13.8 miles from shore (within 3 miles offshore west of a line due north from Bark Point); and prohibited within Isle Royal National Park and the Caribou Island and Southwest Bank, Stannard Rock, and Superior Shoal Protection Areas, and within 3 miles of the shore of the Apostle Islands and Pictured Rocks National Lakeshores or the Grand Portage National Monument. |
| | All other cargos | Prohibited within 13.8 miles from shore; and prohibited within Isle Royal National Park and the Caribou Island and Southwest Bank, Stannard Rock, and Superior Shoal Protection Areas, and within 3 miles of the shore of the Apostle Islands and Pictured Rocks National Lakeshores or the Grand Portage National Monument. |

(c)(1) The master, owner, operator, or person in charge of any commercial ship loading, unloading, or discharging bulk dry cargo in the United States' waters of the Great Lakes and the master, owner, operator, or person in charge of a U.S. commercial ship transporting bulk dry cargo and operating anywhere on the Great Lakes, excluding non-self propelled barges that are not part of an integrated tug and barge unit, must ensure that a written record is maintained on the ship that fully and accurately records information on:

(i) Each loading or unloading operation on the United States' waters of the Great Lakes, or in the case of U.S. commercial ships on any waters of the Great Lakes, involving bulk dry cargo; and

(ii) Each discharge of bulk dry cargo residue that takes place in United States' waters of the Great Lakes, or in the case of U.S. commercial ships on any waters of the Great Lakes.

(2) For each loading or unloading operation, the record must describe:

(i) The date of the operation;

(ii) Whether the operation involved loading or unloading;

(iii) The name of the loading or unloading facility;

(iv) The type of bulk dry cargo loaded or unloaded;

(v) The method or methods used to control the amount of bulk dry cargo residue, either onboard the ship or at the facility;

(vi) The time spent to implement methods for controlling the amount of bulk dry cargo residue; and

(vii) The estimated volume of bulk dry cargo residue created by the loading or unloading operation that is to be discharged.

(3) For each discharge, the record must describe:

(i) The date and time the discharge started, and the date and time the discharge ended;

(ii) The ship's position, in latitude and longitude, when the discharge started and when the discharge ended; and

(iii) The ship's speed during the discharge.

(iv) Records must be kept on Coast Guard Form CG–33, which can be found at *http://www.uscg.mil/hq/cg5/cg522/cg5224/dry_cargo.asp*. The records must be certified by the master, owner, operator, or person in charge and kept in written form onboard the ship for at least two years. Copies of the records must be forwarded to the Coast Guard at least once each quarter, no later than the 15th day of January, April, July, and October. The record copies must be provided to the Coast Guard using only one of the following means:

(A) E-mail to *DCRRecordkeeping@USCG.mil*;

(B) Fax to (202) 372–1926, ATTN: DCR RECORDKEEPING; or

(C) Mail to U.S. Coast Guard: Commandant (CG–522), ATTN: DCR RECORDKEEPING, 2100 2nd St., SW., Stop 7126, Washington, DC 20593–7126.

[USCG–2004–19621, 73 FR 56498, Sept. 29, 2008, as amended at USCG–2010–0351, 75 FR 36284, June 25, 2010]

### § 151.67 Operating requirements: Discharge of plastic prohibited.

No person on board any ship may discharge into the sea, or into the navigable waters of the United States, plastic or garbage mixed with plastic, including, but not limited to, synthetic ropes, synthetic fishing nets, and plastic garbage bags. All garbage containing plastics requiring disposal must be discharged ashore or incinerated.

[CGD 88–002, 54 FR 18405, Apr. 28, 1989, as amended by CGD 88–002A, 55 FR 18583, May 2, 1990]

### § 151.69 Operating requirements: Discharge of garbage outside special areas.

(a) When operating outside of a special area specified in § 151.53, no person may discharge, into the sea, garbage that is separated from plastic, if the distance from nearest land is less than—

(1) 25 nautical miles for dunnage, lining and packing materials that float; or

(2) 12 nautical miles for victual wastes and all other garbage including paper products, rags, glass, metal, bottles, crockery and similar refuse, except that, such garbage may be discharged outside of three nautical miles from nearest land after it has been passed through a grinder or comminuter specified in § 151.75.

(b) Mixtures of garbage having different discharge requirements under paragraph (a)(1) or (a)(2) of this section must be—

(1) Retained on board for later disposal ashore; or

(2) Discharged in accordance with the more stringent requirement prescribed by paragraph (a)(1) or (a)(2) of this section.

### § 151.71 Operating requirements: Discharge of garbage within special areas.

(a) When a ship is located in a special area referenced in § 151.53 of this part, no person may discharge garbage from the ship, except as allowed in paragraph (b) or (c) in this section.

(b) Except as provided in paragraph (c) of this section, disposal into the sea of victual waste must be made as far as practicable from land but, in any case, not less than 12 nautical miles from the nearest land.

(c) Disposal into the Wider Caribbean region of victual wastes which have been passed through a comminuter or grinder shall be made as far as practicable from land but, in any case, not less than 3 nautical miles from the nearest land. Such comminuted or ground food wastes shall be capable of passing through a screen with opening no greater than 25 millimeters.

[CGD 94–056, 60 FR 43378, Aug. 21, 1995]

### § 151.73 Operating requirements: Discharge of garbage from fixed or floating platforms.

(a) Except as allowed in paragraph (b) of this section, no person may discharge garbage from—

(1) A fixed or floating platform engaged in the exploration, exploitation or associated offshore processing of seabed mineral resources; or

(2) Any ship within 500 meters (1650 feet) of such platforms.

(b) Victual waste may be discharged into the sea from a ship or fixed or floating platform regulated by paragraph (a) of this section if—

(1) It passes through a comminuter or grinder meeting § 151.75; and

(2) That ship or fixed or floating platform is beyond 12 nautical miles from nearest land.

### § 151.75 Grinders or comminuters.

Each grinder or comminuter used to discharge garbage in accordance with § 151.69(a)(2) or § 151.73(b)(1), must be capable of processing garbage so that it passes through a screen with openings no greater than 25 millimeters (one inch).

### § 151.77 Exceptions for emergencies.

Sections 151.67, 151.69 and 151.71 do not apply to the following:

(a) Discharges of garbage from a ship for the purpose of securing the safety of the ship and those on board or saving life at sea.

(b) The escape of garbage resulting from damage to a ship or its equipment, if all reasonable precautions have been taken before and after the occurrence of the damage, to prevent or minimize the escape.

(c) The accidental loss of synthetic fishing nets, provided all reasonable precautions have been taken to prevent such loss.

[CGD 88–002, 54 FR 18405, Apr. 28, 1989, as amended by CGD 88–002A, 55 FR 18583, May 2, 1990; CGD 90–054, 56 FR 19578, Apr. 29, 1991]

APPENDIX A TO §§ 151.51 THROUGH 151.77—SUMMARY OF GARBAGE DISCHARGE RESTRICTIONS

| Garbage Type | All Vessels Except Fixed or Floating Platforms and Associated Vessels | | Fixed or Floating Platforms & Assoc. Vessels [3] (33 CFR 151.73) |
|---|---|---|---|
| | Outside special areas (33 CFR 151.69) | In special areas [2] (33 CFR 151.71) | |
| Plastics—includes synthetic ropes and fishing nets and plastic bags. | Disposal prohibited (33 CFR 151.67). | Disposal prohibited (33 CFR 151.67). | Disposal prohibited (33 CFR 151.67). |
| Dunnage, lining and packing materials that float. | Disposal prohibited less than 25 miles from nearest land and in the navigable waters of the U.S. | Disposal prohibited (33 CFR 151.71). | Disposal prohibited. |
| Paper, rags, glass, metal bottles, crockery and similar refuse. | Disposal prohibited less than 12 miles from nearest land and in the navigable waters of the U.S. | Disposal prohibited (33 CFR 151.71). | Disposal prohibited. |
| Paper, rags, glass, etc. comminuted or ground. [1] | Disposal prohibited less than 3 miles from nearest land and in the navigable waters of the U.S. | Disposal prohibited (33 CFR 151.71). | Disposal prohibited. |
| Victual waste not comminuted or ground. | Disposal prohibited less than 12 miles from nearest land and in the navigable waters of the U.S. | Disposal prohibited less than 12 miles from nearest land. | Disposal prohibited. |
| Victual waste comminuted or ground. [1] | Disposal prohibited less than 3 miles from nearest land and in the navigable waters of the U.S. | Disposal prohibited less than 12 miles from nearest land. | Disposal prohibited less than 12 miles from nearest land and in the navigable waters of the U.S. |
| Mixed garbage types. [4] | See Note 4. | See Note 4. | See Note 4. |

Note 1: Comminuted or ground garbage must be able to pass through a screen with a mesh size no larger than 25 mm. (1 inch) (33 CFR 151.75)

Note 2: Special areas under Annex V are the Mediterranean, Baltic, Black, Red, and North Seas areas and the Gulfs area. (33 CFR 151.53)

Note 3: Fixed or floating platforms and associated vessels includes all fixed or floating platforms engaged in exploration, exploitation or associated offshore processing of seabed mineral resources, and all ships within 500m of such platforms.

Note 4: When garbage is mixed with other harmful substances having different disposal or discharge requirements, the more stringent disposal restrictions shall apply.

[CGD 88–002, 54 FR 18405, Apr. 28, 1989, as amended by CGD 90–054, 56 FR 19578, Apr. 29, 1991]

### § 151.79 Operating requirements: Discharge of sewage within Antarctica.

(a) A vessel certified to carry more than 10 persons must not discharge untreated sewage into the sea within 12 nautical miles of Antarctic land or ice shelves; beyond such distance, sewage stored in a holding tank must not be discharged instantaneously but at a moderate rate and, where practicable, while the ship is en route at a speed of no less than 4 knots. For purposes of this section, ''sewage'' means:

(1) Drainage and other wastes from any form of toilets, urinals, and WC scuppers;

(2) Drainage from medical premises (dispensary, sick bay, etc.) via wash basins, wash tubs, and scuppers located in such premises;

(3) Drainage from spaces containing living animals; or

(4) Other waste waters when mixed with the drainages defined above.

(b) Paragraph (a) of this section does not apply to a warship, naval auxiliary, or other ship owned or operated by the United States and used only in government non-commercial service.

(c) Paragraph (a) of this section does not apply in cases of an emergency relating to the safety of a ship and those

on board or saving life at sea. Notice of an activity, otherwise prohibited under paragraph (a) of this section, undertaken in case of an emergency shall be reported immediately to the National Response Center (NRC) *toll free telephone number*: 800–424–8802, *direct telephone:* 202–267–2675, or *Fax:* 202–267–1322.

[CGD 97–015, 62 FR 18045, Apr. 14, 1997, as amended by USCG–2008–0179, 73 FR 35014, June 19, 2008]

## Subpart B—Transportation of Municipal and Commercial Waste

AUTHORITY: 33 U.S.C. 2602; 49 CFR 1.46.

SOURCE: CGD 89–014, 54 FR 22548, May 24, 1989, unless otherwise noted.

### § 151.1000 Purpose.

The purpose of this subpart is to implement the permit provisions of the Shore Protection Act of 1988, (33 U.S.C. 2601 *et seq.*).

[CGD 89–014, 54 FR 22548, May 24, 1989, as amended by USCG–2001–9286, 66 FR 33641, June 25, 2001]

### § 151.1003 Applicability.

(a) Except as provided by paragraph (b) of this section, this subpart applies to each vessel whose purpose is the transportation of municipal or commercial waste in coastal waters.

(b) This subpart does not apply to public vessels.

### § 151.1006 Definitions.

As used in this subpart—

*Coastal waters* means—

(1) The territorial sea of the United States;

(2) The Great Lakes and their connecting waters;

(3) The marine and estuarine waters of the United States up to the head of tidal influence; and

(4) The Exclusive Economic Zone as established by Presidential Proclamation Number 5030, dated March 10, 1983.

NOTE: The Exclusive Economic Zone extends from the baseline of the territorial sea of the United States seaward 200 miles.

*Municipal and commercial waste* means solid waste as defined in section 1004 of the Solid Waste Disposal Act (42 U.S.C. 6903) except—

(1) Solid waste identified and listed under section 3001 of the Solid Waste Disposal Act (42 U.S.C. 6921);

(2) Waste generated by a vessel during normal operations;

(3) Debris solely from construction activities;

(4) Sewage sludge subject to regulation under title I of the Marine Protection, Research, and Sanctuaries Act of 1972 (33 U.S.C. 1401 *et seq.*); and

(5) Dredge or fill material subject to regulation under title I of the Marine Protection, Research and Sanctuaries Act of 1972 (33 U.S.C. 1401 *et seq.*), the Federal Water Pollution Control Act (33 U.S.C. 1251 *et seq.*), or the Rivers and Harbors Appropriation Act of 1899 (33 U.S.C. 401 *et seq.*).

*Public vessel* means a vessel that—

(1) Is owned, or demise chartered, and operated by the United States Government or a government of a foreign country; and

(2) Is not engaged in commercial service.

*Vessel* means every description of watercraft or other artifical contrivance used, or capable of being used, as a means of transportation on water.

[CGD 89–014, 54 FR 22548, May 24, 1989, as amended by USCG–2001–9286, 66 FR 33641, June 25, 2001]

### § 151.1009 Transportation of municipal or commercial waste.

A vessel may not transport municipal or commercial waste in coastal waters without—

(a) A conditional permit to transport municpal or commercial waste issued under this subpart; and

(b) Displaying a number in accordance with § 151.1024.

[CGD 89–014, 54 FR 22548, May 24, 1989; CGD 89–014, 54 FR 24078, June 5, 1989]

### § 151.1012 Applying for a conditional permit.

(a) The owner or operator of each vessel to which this subpart applies shall apply by letter for a conditional permit required by § 151.1009. Applications must be submitted to Commandant (CG–5431), U.S. Coast Guard Headquarters, 2100 2nd St., SW., Stop 7581, Washington, DC 20593–7581, Attn: Shore Protection Act Desk and include the following:

(1) The name, address, and telephone number of the vessel owner and operator.

(2) The vessel's name and official number, if any.

(3) The vessel's area of operation.

(4) The vessel's transport capacity.

(5) A history of the types of cargo transported by the vessel during the previous year, including identifying the type of municipal or commercial waste transported as—

(i) Municipal waste;

(ii) Commercial waste;

(iii) Medical waste; or

(iv) Waste of another character.

(6) The types of cargo to be transported by the vessel during the effective period of the conditional permit, including identifying the type of municipal or commercial waste as it is identified in paragraphs (a)(5)(i) through (iv) of this section.

(7) A statement of whether the application for a conditional permit is for a single voyage, a short term operation or a continuing operation. If the application is for a single voyage or a short term operation, the statement must include the duration of the voyage or operation.

(8) An acknowledgment that certifies as to the truthfulness and accuracy of the information provided.

(b) The owner or operator under paragraph (a) of this section shall provide any additional information the Coast Guard may require.

[CGD 89–014, 54 FR 22548, May 24, 1989, as amended by CGD 96–026, 61 FR 33665, June 28, 1996; USCG–2008–0179, 73 FR 35014, June 19, 2008; USCG–2010–0351, 75 FR 36284, June 25, 2010]

### § 151.1015 Issuing or denying the issuance of a conditional permit.

(a) After reviewing the application made under § 151.1012, the Coast Guard either—

(1) Issues the conditional permit for a vessel under this section; or

(2) Denies the issuance of the conditional permit to the vessel in accordance with paragraph (c) of this section. On denying the issuance of the permit, the Coast Guard notifies the applicant of the—

(i) Denial and the reason for the denial; and

(ii) Procedures under § 151.1021 for appealing the denial.

(b) Each conditional permit issued under this section is effective—

(1) On the date it is issued; and

(2) Until the expiration date stated on the conditional permit unless it is—

(i) Withdrawn under § 151.1018;

(ii) Terminated because—

(A) The vessel is sold; or

(B) This subpart no longer applies to the vessel.

(c) The Coast Guard may deny the issuance of a conditional permit if—

(i) The application does not contain the information required under § 151.1012; or

(ii) There is reason to believe that the information contained on the application is not true and correct.

### § 151.1018 Withdrawal of a conditional permit.

(a) The Coast Guard may withdraw a conditional permit if the Administrator of the EPA requests withdrawal because the Administrator has determined that the owner or operator of the vessel has a record or a pattern of serious violations of—

(1) Subtitle A of the Shore Protection Act of 1988 (33 U.S.C. 2601 *et seq.*);

(2) The Solid Waste Disposal Act (42 U.S.C. 6901 *et seq.*);

(3) The Marine Protection, Research, and Sanctuaries Act of 1972 (33 U.S.C. 1401 *et seq.*);

(4) The Rivers and Harbors Appropriations Act of 1899 (33 U.S.C. 1401 *et seq.*); or

(5) The Federal Water Pollution Control Act (33 U.S.C. 1251 *et seq.*).

(b) Upon reaching a determination to withdraw a conditional permit, the Coast Guard notifies the owner or operator of—

(1) The withdrawal and the reason for the withdrawal;

(2) The procedures for appealing the withdrawal.

(c) After receiving the notice under paragraph (b) of this section, the owner or operator shall ensure that—

(1) The vessel immediately ceases transporting municipal or commercial waste and the marking required by § 151.1024 is removed; and

(2) The conditional permit is returned to the Coast Guard within 5 days after receiving the notice.

### § 151.1021 Appeals.

(a) Any person directly affected by an action taken under this subpart may request reconsideration by the Coast Guard officer responsible for that action.

(b) The person affected who is not satisfied with a ruling after having it reconsidered under paragraph (a) of this section may—

(1) Appeal that ruling in writing within 30 days after the ruling to the Assistant Commandant for Marine Safety, Security, and Stewardship (CG–5), U.S. Coast Guard Headquarters, 2100 2nd St., SW., Stop 7355, Washington, DC 20593–7355; and

(2) Supply supporting documentation and evidence that the appellant wishes to have considered.

(c) After reviewing the appeal submitted under paragraph (b) of this section, the Assistant Commandant for Marine Safety, Security and Environmental Protection issues a ruling which is final agency action.

(d) If the delay in presenting a written appeal has an adverse impact on the operations of the appellent, the appeal under paragraph (b) of this section—

(1) May be presented orally; and

(2) Must be submitted in writing within five days after the oral presentation—

(i) With the basis for the appeal and a summary of the material presented orally; and

(ii) To the same Coast Guard official who heard the oral presentation.

[CGD 89–014, 54 FR 22548, May 24, 1989, as amended by CGD 96–026, 61 FR 33665, June 28, 1996; CGD 97–023, 62 FR 33363, June 19, 1997; USCG–2002–12471, 67 FR 41332, June 18, 2002; USCG–2008–0179, 73 FR 35014, June 19, 2008; USCG–2010–0351, 75 FR 36284, June 25, 2010]

### § 151.1024 Display of number.

(a) The owner or operator of each vessel under this subpart must ensure that the vessel number stated on the conditional permit issued under § 151.1015 is displayed so that it—

(1) Is clearly legible;

(2) Has a contrasting background;

(3) Is readily visible from either side of the vessel; and

(4) Is in block figures that are at least 18 inches in height.

(b) No person may tamper with or falsify a number required under this section.

## Subpart C—Ballast Water Management for Control of Nonindigenous Species in the Great Lakes and Hudson River

AUTHORITY: 16 U.S.C. 4711; Department of Homeland Security Delegation No. 0170.1.

SOURCE: CGD 91–066, 58 FR 18334, Apr. 8, 1993, unless otherwise noted.

### § 151.1500 Purpose.

The purpose of this subpart is to implement the provisions of the Nonindigenous Aquatic Nuisance Prevention and Control Act of 1990 (16 U.S.C. 4701 *et seq.*).

### § 151.1502 Applicability.

This subpart applies to each vessel that carries ballast water and that after operating on the waters beyond the Exclusive Economic Zone during any part of its voyage enters the Snell Lock at Massena, New York, or navigates north of the George Washington Bridge on the Hudson River, regardless of other port calls in the United States or Canada during that voyage.

[CGD 94–003, 59 FR 67634, Dec. 30, 1994]

### § 151.1504 Definitions.

The following terms are defined as used in this subpart.

*Ballast water* means any water and suspended matter taken on board a vessel to control or maintain, trim, draught, stability, or stresses of the vessel, regardless of how it is carried.

*Ballast tank* means any tank or hold on a vessel used for carrying ballast water, whether or not the tank or hold was designed for that purpose.

*Captain of the Port (COTP)* means the Coast Guard officer designated as COTP of either the Buffalo, NY, Marine Inspection Zone and Captain of the Port Zone or the New York, NY, Captain of the Port Zone described in part

3 of this chapter or an official designated by the COTP.

*Commandant* means the Commandant of the Coast Guard or an authorized representative.

*Exclusive Economic Zone (EEZ)* means the area established by Presidential Proclamation Number 5030, dated March 10, 1983, (48 FR 10605, 3 CFR, 1983 Comp., p. 22), which extends from the base line of the territorial sea of the United States seaward 200 miles, and the equivalent zone of Canada.

*Environmentally sound method* means methods, efforts, actions, or programs, either to prevent introductions or to control infestations of aquatic nuisance species, that minimize adverse impacts to the structure and function of an ecosystem, minimize adverse effects on non-target organisms and ecosystems, and that emphasize integrated pest management techniques and non-chemical measures.

*Great Lakes* means Lake Ontario, Lake Erie, Lake Huron (including Lake Saint Clair), Lake Michigan, Lake Superior, and the connecting channels (Saint Mary's River, Saint Clair River, Detroit River, Niagara River, and Saint Lawrence River to the Canadian border), and includes all other bodies of water within the drainage basin of such lakes and connecting channels.

*Port* means a terminal or group of terminals or any place or facility that has been designated as a port by the COTP.

*Sediments* means any matter settled out of ballast water within a vessel.

*Voyage* means any transit by a vessel destined for the Great Lakes or the Hudson River, north of the George Washington Bridge, from a port or place outside of the EEZ, including intermediate stops at a port or place within the EEZ.

[CGD 91–066, 58 FR 18334, Apr. 8, 1993, as amended by CGD 94–003, 59 FR 67634, Dec. 30, 1994; USCG–1998–3423, 64 FR 26682, May 17, 1999]

### § 151.1506 Restriction of operation.

No vessel subject to the requirements of this subpart may be operated in the Great Lakes or the Hudson River, north of the George Washington Bridge, unless the master of the vessel has certified, in accordance with § 151.1516, that the requirements of this subpart have been met.

[CGD 94–003, 59 FR 67634, Dec. 30, 1994]

### § 151.1508 Revocation of clearance.

A COTP may request the District Director of Customs to withhold or revoke the clearance required by 46 U.S.C. app. 91 for a vessel subject to this subpart, the owner or operator of which is not in compliance with the requirements of this subpart.

### § 151.1510 Ballast water management.

(a) The master of each vessel subject to this subpart shall employ one of the following ballast water management practices:

(1) Carry out an exchange of ballast water on the waters beyond the EEZ, from an area more than 200 nautical miles from any shore, and in waters more than 2,000 meters (6,560 feet, 1,093 fathoms) deep, prior to entry into the Snell Lock, at Massena, New York, or prior to navigating on the Hudson River, north of the George Washington Bridge, such that, at the conclusion of the exchange, any tank from which ballast water will be discharged contains water with a minimum salinity level of 30 parts per thousand.

(2) Retain the vessel's ballast water on board the vessel. If this method of ballast water management is employed, the COTP may seal any tank or hold containing ballast water on board the vessel for the duration of the voyage within the waters of the Great Lakes or the Hudson River, north of the George Washington Bridge.

(3) Use an alternative environmentally sound method of ballast water management that has been submitted to, and approved by, the Commandant prior to the vessel's voyage. Requests for approval of alternative ballast water management methods must be submitted to the Commandant (CG–5), 2100 2nd Street, SW., Stop 7355, Washington, DC 20593–7355.

(b) No master of a vessel subject to this subpart shall separately discharge sediment from tanks or holds containing ballast water unless it is disposed of ashore in accordance with local requirements.

(c) Nothing in this subpart authorizes the discharge of oil or noxious liquid

substances (NLSs) in a manner prohibited by United States or international laws or regulations. Ballast water carried in any tank containing a residue of oil, NLSs, or any other pollutant must be discharged in accordance with the applicable regulations. Nothing in this subpart affects or supersedes any requirement or prohibitions pertaining to the discharge of ballast water into the waters of the United States under the Federal Water Pollution Control Act (33 U.S.C. 1251 *et seq.*).

[CGD 91–066, 58 FR 18334, Apr. 8, 1993, as amended by CGD 94–003, 59 FR 67634, Dec. 30, 1994; USCG–1998–3423, 66 FR 58390, Nov. 21, 2001; USCG–2010–0351, 75 FR 36284, June 25, 2010]

### § 151.1512 Vessel safety.

Nothing in this subpart relieves the master of the responsibility for ensuring the safety and stability of the vessel or the safety of the crew and passengers, or any other responsibility.

### § 151.1514 Ballast water management alternatives under extraordinary conditions.

The master of any vessel subject to this subpart who, due to weather, equipment failure, or other extraordinary conditions, is unable to effect a ballast water exchange before entering the EEZ, must employ another method of ballast water management listed in § 151.1510, or request from the COTP permission to exchange the vessel's ballast water within an area agreed to by the COTP at the time of the request and must discharge the vessel's ballast water within that designated area.

### § 151.1516 Compliance monitoring.

(a) The master of each vessel equipped with ballast tanks shall provide, as detailed in § 151.2040, the following information, in written form, to the COTP:

(1) The vessel's name, port of registry, and official number or call sign.

(2) The name of the vessel's owner(s).

(3) Whether ballast water is being carried.

(4) The original location and salinity, if known, of ballast water taken on, before an exchange.

(5) The location, date, and time of any ballast water exchange.

(6) The salinity of any ballast water to be discharged into the territorial waters of the United States.

(7) The intended discharge port for ballast water and location for disposal of sediment carried upon entry into the territorial waters of the United States, if ballast water or sediment are to be discharged.

(8) The signature of the master attesting to the accuracy of the information provided and certifying compliance with the requirements of this subpart.

(b) The COTP may take samples of ballast water to assess the compliance with, and the effectiveness of, this subpart.

[CGD 91–066, 58 FR 18334, Apr. 8, 1993, as amended by USCG–1998–3423, 66 FR 58391, Nov. 21, 2001; USCG–2002–13147, 69 FR 32869, June 14, 2004]

### § 151.1518 Penalties for failure to conduct ballast water management.

(a) A person who violates this subpart is liable for a civil penalty in an amount not to exceed $27,500. Each day of a continuing violation constitutes a separate violation. A vessel operated in violation of the regulations is liable in rem for any civil penalty assessed under this subpart for that violation.

(b) A person who knowingly violates the regulations of this subpart is guilty of a class C felony.

[USCG–2002–13147, 69 FR 32869, June 14, 2004]

## Subpart D—Ballast Water Management for Control of Nonindigenous Species in Waters of the United States

AUTHORITY: 16 U.S.C. 4711; Department of Homeland Security Delegation No. 0170.1.

SOURCE: USCG–1998–3423, 64 FR 26682, May 17, 1999, unless otherwise noted.

### § 151.2000 What is the purpose of this subpart?

This subpart implements the provisions of the Nonindigenous Aquatic Nuisance Prevention and Control Act of 1990 (NANPCA) (16 U.S.C. 4701–4751), as amended by the National Invasive Species Act of 1996 (NISA).

### § 151.2005 To which vessels does this subpart apply?

Unless exempted in § 151.2010 or § 151.2015, this subpart applies to all vessels, U.S. and foreign, equipped with ballast tanks, that operate in the waters of the United States and are bound for ports or places in the United States.

[USCG–2002–13147, 69 FR 32869, June 14, 2004]

### § 151.2007 What are the penalties for violations of the mandatory provisions of this subpart?

(a) A person who violates this subpart is liable for a civil penalty not to exceed $ 27,500. Each day of a continuing violation constitutes a separate violation. A vessel operated in violation of the regulations is liable in rem for any civil penalty assessed under this subpart for that violation.

(b) A person who knowingly violates the regulations of this subpart is guilty of a class C felony.

[USCG–2002–13147, 69 FR 32869, June 14, 2004]

### § 151.2010 Which vessels are exempt from the mandatory requirements?

(a) Two types of vessels are exempt from the requirements in §§ 151.2035, 151.2040, and 151.2045:

(1) A crude oil tanker engaged in the coastwise trade.

(2) A Department of Defense or Coast Guard vessel subject to the requirements of section 1103 of the Act, or any vessel of the Armed Forces, as defined in the Federal Water Pollution Control Act (33 U.S.C. 1322(a)) that is subject to the ''Uniform National Discharge Standards for Vessels of the Armed Forces'' (33 U.S.C. 1322(n)).

(b) One type of vessel is exempt from the requirements in §§ 151.2040 and 151.2045:

(1) A vessel that operates exclusively within one Captain of the Port (COTP) Zone.

(2) [Reserved]

[USCG–2007–28201, 72 FR 27739, May 17, 2007]

### § 151.2015 Is a vessel in innocent passage exempt from the mandatory requirements?

A foreign vessel merely traversing the territorial sea of the U.S. (*i.e.*, not entering or departing a U.S. port, or not navigating the internal waters of the U.S.) is exempt from the requirements of this subpart.

[USCG–2003–14273, 69 FR 44961, July 28, 2004]

### § 151.2025 What definitions apply to this subpart?

(a) Unless otherwise stated in this section, the definitions in 33 CFR 151.1504, 33 CFR 160.203, and the United Nations Convention on the Law of the Sea apply to this part.

(b) As used in this part—

*ANSTF* means the Aquatic Nuisance Species Task Force mandated under the Nonindigenous Aquatic Nuisance Prevention and Control Act of 1990 (NANPCA).

*Ballast tank* means any tank or hold on a vessel used for carrying ballast water, whether or not the tank or hold was designed for that purpose.

*Captain of the Port (COTP)* means the Coast Guard officer designated as the COTP, or a person designated by that officer, for the COTP zone covering the U.S. port of destination. These COTP zones are listed in 33 CFR part 3.

*Exchange* means to replace the water in a ballast tank using one of the following methods:

(1) *Flow through exchange* means to flush out ballast water by pumping in mid-ocean water at the bottom of the tank and continuously overflowing the tank from the top until three full volumes of water has been changed—to minimize the number of original organisms remaining in the tank.

(2) *Empty/refill exchange* means to pump out the ballast water taken on in ports, estuarine, or territorial waters until the tank is empty, then refilling it with mid-ocean water; masters/operators should pump out as close to 100 percent of the ballast water as is safe to do so.

*Exclusive Economic Zone (EEZ)* means the area established by Presidential Proclamation Number 5030, dated March 10, 1983 (48 FR 10605, 3 CFR, 1983 Comp., p. 22) which extends from the base line of the territorial sea of the United States seaward 200 miles, and the equivalent zone of Canada.

*IMO guidelines* mean the Guidelines for the Control and Management of Ships' Ballast Water to Minimize the

Transfer of Harmful Aquatic Organisms and Pathogens (IMO Resolution A.868 (20), adopted November 1997).

*NANPCA* means the Nonindigenous Aquatic Nuisance Prevention and Control Act of 1990.

*NBIC* means the National Ballast Water Information Clearinghouse operated by the Coast Guard and the Smithsonian Environmental Research Center as mandated under NISA.

*NISA* means the National Invasive Species Act of 1996, which reauthorized and amended NANPCA.

*Port or place of departure* means any port or place in which a vessel is anchored or moored.

*Port or place of destination* means any port or place to which a vessel is bound to anchor or moor.

*United States* means the States, the District of Columbia, the Commonwealth of Puerto Rico, Guam, American Samoa, the Virgin Islands, and the Trust Territory of the Pacific Islands.

*Voyage* means any transit by a vessel destined for any United States port or place.

*Waters of the United States* means waters subject to the jurisdiction of the United States as defined in 33 CFR § 2.38, including the navigable waters of the United States. For this regulation, the navigable waters include the territorial sea as extended to 12 nautical miles from the baseline, pursuant to Presidential Proclamation No. 5928 of December 27, 1988.

[USCG–1998–3423, 64 FR 26682, May 17, 1999, as amended by USCG–2003–15404, 68 FR 37741, June 25, 2003; USCG–2002–13147, 69 FR 32869, June 14, 2004; USCG–2003–14273, 69 FR 44961, July 28, 2004]

### § 151.2030 Who is responsible for determining when to use the safety exemption?

(a) The master, operator, or person-in-charge of a vessel is responsible for the safety of the vessel, its crew, and its passengers.

(b) The master, operator, or person-in-charge of a vessel is not required to conduct a ballast water management practice (including exchange), if the master decides that the practice would threaten the safety of the vessel, its crew, or its passengers because of adverse weather, vessel design limitations, equipment failure, or any other extraordinary conditions. If the master uses this section, and the—

(1) Vessel is on a voyage to the Great Lakes or Hudson River, the vessel must comply with the requirements of § 151.1514 of subpart C of this part (Ballast water management alternatives under extraordinary conditions); or

(2) Vessel is on a voyage to any port other than the Great Lakes or Hudson River, the vessel shall not be required to perform a ballast water management practice which the master has found to threaten the safety of the vessel, its crew, or its passengers because of adverse weather, vessel design limitations, equipment failure, or any other extraordinary conditions.

(c) Nothing in this subpart relieves the master, operator, or person-in-charge of a vessel, of the responsibility for ensuring the safety and stability of the vessel or the safety of the crew and passengers, or any other responsibility.

### § 151.2035 What are the required ballast water management practices for my vessel?

(a) Masters, owners, operators, or persons-in-charge of all vessels equipped with ballast water tanks that operate in the waters of the U.S. must:

(1) Avoid the discharge or uptake of ballast water in areas within or that may directly affect marine sanctuaries, marine preserves, marine parks, or coral reefs.

(2) Minimize or avoid uptake of ballast water in the following areas and situations:

(i) Areas known to have infestations or populations of harmful organisms and pathogens (e.g., toxic algal blooms).

(ii) Areas near sewage outfalls.

(iii) Areas near dredging operations.

(iv) Areas where tidal flushing is known to be poor or times when a tidal stream is known to be more turbid.

(v) In darkness when bottom-dwelling organisms may rise up in the water column.

(vi) Where propellers may stir up the sediment.

(vii) Areas with pods of whales, convergence zones, and boundaries of major currents.

(3) Clean the ballast tanks regularly to remove sediments. Clean the tanks in mid-ocean or under controlled arrangements in port, or at dry dock. Dispose of your sediments in accordance with local, State, and Federal regulations.

(4) Discharge only the minimal amount of ballast water essential for vessel operations while in the waters of the United States.

(5) Rinse anchors and anchor chains when you retrieve the anchor to remove organisms and sediments at their place of origin.

(6) Remove fouling organisms from hull, piping, and tanks on a regular basis and dispose of any removed substances in accordance with local, State and Federal regulations.

(7) Maintain a ballast water management plan that has been developed specifically for the vessel that will allow those responsible for the plan's implementation to understand and follow the vessel's ballast water management strategy.

(8) Train the master, operator, person-in-charge, and crew, on the application of ballast water and sediment management and treatment procedures.

(b) In addition to the provisions of paragraph (a) of this section, if the vessel carries ballast water that was taken on in areas less than 200 nautical miles from any shore into the waters of the U.S. after operating beyond the Exclusive Economic Zone, you (the master, operator, or person-in-charge of a vessel) must employ at least one of the following ballast water management practices:

(1) Perform complete ballast water exchange in an area no less than 200 nautical miles from any shore prior to discharging ballast water in U.S. waters;

(2) Retain ballast water onboard the vessel; or

(3) Prior to the vessel entering U.S. waters, use an alternative environmentally sound method of ballast water management that has been approved by the Coast Guard.

[USCG–1998–3423, 64 FR 26682, May 17, 1999, as amended at 66 FR 58391, Nov. 21, 2001; USCG–2003–14273, 69 FR 44961, July 28, 2004; USCG–2002–14273, 69 FR 60309, Oct. 8, 2004]

### § 151.2036 If my voyage does not take me into waters 200 nautical miles or greater from any shore, must I divert to conduct a ballast water exchange?

A vessel will not be required to deviate from its voyage, or delay the voyage, in order to conduct a ballast water exchange.

[USCG–2003–14273, 69 FR 44961, July 28, 2004]

### § 151.2037 If my vessel cannot conduct ballast water management practices because of its voyage and/or safety concerns, will I be prohibited from discharging ballast water?

(a) A vessel that cannot practicably meet the requirements of § 151.2035(b)(1) because its voyage does not take it into waters 200 nautical miles or greater from any shore for a sufficient length of time and elects to retain ballast water on board, or because of the safety concerns contained in § 151.2030, will not be prohibited from the discharge of ballast water in areas other than the Great Lakes and the Hudson River. However, the vessel must discharge only that amount of ballast water operationally necessary to ensure the safety of the vessels for cargo operations and make ballast water records available to the local Captain of the Port upon request.

(b) A vessel that cannot practicably meet the requirements of § 151.2035(b)(3) because its alternative environmentally sound ballast water management method is inoperable must employ one of the other ballast water management practices stated in § 151.2035(b). If the vessel cannot employ other ballast water management practices due to voyage or safety concerns, the vessel will not be prohibited from the discharge of ballast water in areas other than the Great Lakes and the Hudson River. However, the vessel must discharge only that amount of ballast water operationally necessary to ensure the safety of the vessels for cargo operations and make ballast water records available to the local Captain of the Port upon request.

[USCG–2003–14273, 69 FR 44961, July 28, 2004]

**§ 151.2040 What are the mandatory ballast water management requirements for vessels equipped with ballast tanks that operate in the waters of the United States and are bound for ports or places in the United States?**

(a) A vessel bound for the Great Lakes or Hudson River, which has operated beyond the EEZ (which includes the equivalent zone of Canada) during any part of its voyage regardless of intermediate ports of call within the waters of the United States or Canada, must comply with §§ 151.2041 and 151.2045 of this subpart, as well as with the provisions of subpart C of this part.

(b) A vessel engaged in the foreign export of Alaskan North Slope Crude Oil must comply with §§ 151.2041 and 151.2045 of this subpart, as well as with the provisions of 15 CFR 754.2(j)(1)(iii). Section 15 CFR 754.2(j)(1)(iii) requires a mandatory program of deep water ballast exchange unless doing so would endanger the safety of the vessel or crew.

(c) A vessel not covered by paragraphs (a) or (b) of this section and is bound for ports or places in the United States must comply with §§ 151.2041 and 151.2045 of this subpart.

(d) This subpart does not authorize the discharge of oil or noxious liquid substances (NLS) in a manner prohibited by United States or international laws or regulations. Ballast water carried in any tank containing a residue of oil, NLS, or any other pollutant must be discharged in accordance with applicable regulations.

(e) This subpart does not affect or supercede any requirement or prohibition pertaining to the discharge of ballast water into the waters of the United States under the Federal Water Pollution Control Act (33 U.S.C. 1251 to 1376).

[USCG–2002–13147, 69 FR 32869, June 14, 2004]

**§ 151.2041 What are the mandatory ballast water reporting requirements for all vessels equipped with ballast tanks bound for ports or places of the United States?**

(a) Ballast water reporting requirements exist for each vessel bound for ports or places of the United States regardless of whether a vessel operated outside of the EEZ (which includes the equivalent zone of Canada), unless exempted in §§ 151.2010 or 151.2015.

(b) The master, owner, operator, agent, or person-in-charge of a vessel to whom this section applies must provide the information required by § 151.2045 in electronic or written form (OMB form Control No. 1625–0069) to the Commandant, U.S. Coast Guard or the appropriate COTP as follows:

(1) For any vessel bound for the Great Lakes from outside the EEZ (which includes the equivalent zone of Canada).

(i) You must fax the required information at least 24 hours before the vessel arrives in Montreal, Quebec to either the USCG COTP Buffalo, Massena Detachment (315–769–5032), or the St. Lawrence Seaway Development Corporation (315–764–3250); or

(ii) If you are not a U.S. or Canadian Flag vessel, you may complete the ballast water information section of the St. Lawrence Seaway required ''Pre-entry Information from Foreign Flagged Vessels Form'' and submit it in accordance with the applicable Seaway Notice in lieu of this requirement.

(2) For any vessel bound for the Hudson River north of the George Washington Bridge entering from outside the EEZ (which includes the equivalent zone of Canada). You must fax the information to the COTP New York (718–354–4249) at least 24 hours before the vessel enters New York, New York.

(3) For any vessel not addressed in paragraphs (b)(1) and (b)(2) of this section, which is equipped with ballast water tanks and bound for ports or places in the United States. If your voyage is less than 24 hours, you must report before departing your port or place of departure. If your voyage exceeds 24 hours, you must report at least 24 hours before arrival at your port or place of destination. All required information is to be sent to the National Ballast Information Clearinghouse (NBIC) using only one of the following means:

(i) Internet at: *http://invasions.si.edu/NBIC/bwform.html;*

(ii) E-mail to *NBIC@BALLASTREPORT.ORG;*

(iii) Fax to 301–261–4319; or

(iv) Mail to U.S. Coast Guard, c/o SERC (Smithsonian Environmental Research Center), P.O. Box 28, Edgewater, MD 21037–0028.

(c) If the information submitted in accordance with this section changes, you must submit an amended form before the vessel departs the waters of the United States.

[USCG–2002–13147, 69 FR 32870, June 14, 2004; 69 FR 40767, July 7, 2004]

### § 151.2043 Equivalent Reporting Methods for vessels other than those entering the Great Lakes or Hudson River after operating outside the EEZ or Canadian equivalent.

(a) For ships required to report under § 151.2041 the Chief, Environmental Standards Division (CG–5224), acting for the Assistant Commandant for Marine Safety, Security, and Stewardship (CG–5) may, upon receipt of a written request, consider and approve alternative methods of reporting if:

(1) Such methods are at least as effective as that required by § 151.2041; and

(2) Compliance with the requirement is economically or physically impractical.

(i) The Chief, Environmental Standards Division (CG–5224) will take approval or disapproval action on the request submitted in accordance with paragraph (a) of this section within 30 days of receipt of the request.

(ii) [Reserved]

[USCG–1998–3423, 66 FR 58391, Nov. 21, 2001, as amended by USCG–2002–12471, 67 FR 41332, June 18, 2002. Redesignated and amended by USCG–2002–13147, 69 FR 32870, June 14, 2004; USCG–2008–0179, 73 FR 35014, June 19, 2008]

### § 151.2045 What are the mandatory recordkeeping requirements for vessels equipped with ballast tanks that are bound for a port or place in the United States?

(a) The master, owner, operator, or person in charge of a vessel bound for a port or place in the United States, unless specifically exempted by §§ 151.2010 or 151.2015 must keep written, records that include the following information (Note: Ballast tank is any tank or hold that carries ballast water regardless of design):

(1) *Vessel information*. Include the—

(i) Name;

(ii) International Maritime Organization (IMO) Number (official number if IMO number not issued);

(iii) Vessel type;

(iv) Owner or operator;

(v) Gross tonnage;

(vi) Call sign; and

(vii) Port of Registry (Flag).

(2) *Voyage information*. Include the date and port of arrival, vessel agent, last port and country of call, and next port and country of call.

(3) *Total ballast water information*. Include the total ballast water capacity, total volume of ballast water on board, total number of ballast water tanks, and total number of ballast water tanks in ballast. Use units of measurements such as metric tons (MT), cubic meters (m3), long tons (LT), and short tons (ST).

(4) *Ballast Water Management*. Include the total number of ballast tanks/holds that are to be discharged into the waters of the United States or to a reception facility. If an alternative ballast water management method is used, please note the number of tanks that were managed using an alternative method, as well as the type of method used. Indicate whether the vessel has a ballast water management plan and IMO guidelines on board, and whether the ballast water management plan is used.

(5) *Information on ballast water tanks that are to be discharged into the waters of the United States or to a reception facility*. Include the following:

(i) The origin of ballast water. This includes date(s), location(s), volume(s) and temperature(s) (If a tank has been exchanged, list the loading port of the ballast water that was discharged during the exchange.).

(ii) The date(s), location(s), volume(s), method, thoroughness (percentage exchanged if exchange conducted), sea height at time of exchange if exchange conducted, of any ballast water exchanged or otherwise managed.

(iii) The expected date, location, volume, and salinity of any ballast water to be discharged into the waters of the United States or a reception facility.

(6) *Discharge of sediment*. If sediment is to be discharged within the jurisdiction of the United States include the

location of the facility where the disposal will take place.

(7) *Certification of accurate information*. Include the master, owner, operator, person in charge, or responsible officer's printed name, title, and signature attesting to the accuracy of the information provided and certifying compliance with the requirements of this subpart.

(8) *Change to previously submitted information*. Indicate whether the information is a change to information previously submitted for this voyage.

(9) The master, owner, operator, or person in charge of a vessel subject to this section, must retain a signed copy of this information on board the vessel for 2 years.

(10) The information required of this subpart may be used to satisfy the ballast water recordkeeping requirements for vessels subject to § 151.2040(a) and (b).

(11) A sample form and the instructions for completing the form are in the appendix to this subpart. If you complete the ''Ballast Water Reporting Form'' contained in the IMO Guidelines or complete the ballast water information section of the St. Lawrence Seaway required ''Pre-entry Information Flagged Vessels Form,'' then you have met the requirements of this section.

[USCG–1998–3423, 64 FR 26682, May 17, 1999, as amended at 66 FR 58391, Nov. 21, 2001; USCG–2002–13147, 69 FR 32870, June 14, 2004]

### § 151.2050 What methods are used to monitor compliance with this subpart?

(a) The COTP may take samples of ballast water and sediment, examine documents, and make other appropriate inquiries to assess the compliance of any vessel subject to this subpart.

(b) The master, owner, operator, or person in charge of a vessel subject to this section, shall make available to the COTP the records required by § 151.2045 upon request.

(c) The NBIC will compile the data obtained from submitted reports. This data will be used, in conjunction with existing databases on the number of vessel arrivals, to assess vessel reporting rates.

### § 151.2055 Where are the alternate exchange zones located? [Reserved]

### § 151.2060 What must each application for approval of an alternative compliance technology contain? [Reserved]

### § 151.2065 What is the standard of adequate compliance determined by the ANSTF for this subpart? [Reserved]

APPENDIX TO SUBPART D OF PART 151—BALLAST WATER REPORTING FORM AND INSTRUCTIONS FOR BALLAST WATER REPORTING FORM

## INSTRUCTIONS FOR BALLAST WATER REPORTING FORM

(Please write in English and PRINT legibly.)

**Is this an Amended Ballast Reporting Form?:** Check Yes or No. Amendments should be submitted if there are any differences between actual ballast discharges and discharge information reported in a prior form. Please mark "Yes" if this form amends a previously submitted ballast reporting form.

## SECTION 1. VESSEL INFORMATION

**Vessel Name:** Print the name of the vessel clearly.

**IMO Number:** Fill in identification number of the vessel used by the International Maritime Organization.

**Owner:** Write in the name of the registered owner(s) of the vessel. If under charter, enter Operator name.

**Type:** List specific vessel type. Use the following abbreviations: bulk (**bc**), roro (**rr**), container (**cs**), tanker (**ts**), passenger (**pa**), oil/bulk ore (**ob**), general cargo (**gc**), reefer (**rf**). Write out any additional vessel types.

**GT:** What is the Gross Tonnage of the vessel?

**Call Sign:** Write in the official call sign.

**Flag:** Fill in the full name of the country under whose authority the ship is operating. No abbreviations please.

## SECTION 2. VOYAGE INFORMATION

**Arrival Port:** Write in the name of your first port of call after entering the U.S. EEZ or St. Lawrence Seaway. No abbreviations.
**Arrival Date:** Fill in the arrival date to the above port. Please use European date format (DDMMYY).

**Agent:** List agent used for current port.

**Last Port:** Fill in the last port at which the vessel called immediately before entering the U.S. EEZ.
No abbreviations please.

**Country of Last Port**: Fill in the last country at which the vessel called immediately before entering the U.S. EEZ.
No abbreviations please.

**Next Port:** Fill in the port at which the vessel will call immediately after departing the current port ("Current Port"="Arrival Port" above). No abbreviations please.

**Country of Next Port:** Fill in the country of "Next Port" at which the vessel will call immediately after current port. No abbreviations please.

## SECTION 3. BALLAST WATER

**Total Ballast Water on Board:**
**Volume:** What was the total volume of ballast water on board upon arrival into the waters of U.S. EEZ? Do not count potable water.

**Units:** Please include volume units ($m^3$, MT, LT, ST).
**Number of Tanks in Ballast:** Count the number of ballast tanks and holds with ballast as vessel enters waters inside the United States EEZ.

**Total Ballast Water Capacity:**
**Volume:** What is the maximum volume of ballast water used when no cargo is on board?
**Units:** Please include volume units ($m^3$, MT, LT, ST).
**Total Number of Tanks on Ship:** Count all tanks and holds that can carry ballast water (do not include tanks that carry potable water).

## SECTION 4. BALLAST WATER MANAGEMENT

**Total No. of tanks to be discharged:** Count only tanks and holds with ballast to be discharged into waters inside the United States EEZ or into an approved reception facility. Count all tanks and holds separately (e.g., port and starboard tanks should be counted separately).

**Of tanks to be discharged, how many Underwent Exchange:** Count all tanks that are to be discharged into waters of the United States or into an approved reception facility.

**Of tanks to be discharged, how many Underwent Alternative Management:** Count all tanks that are to be discharged into waters of the United States or an approved reception facility.

**Please specify alternative method(s) used, if any:** Specifically, describe methods used for ballast management.

**If no ballast treatment conducted, state reason why not:** This applies to all tanks and holds being discharged into waters of the

United States or into an approved reception facility.

**Ballast Management Plan on board?:** Is there a written document on board, specific to your vessel, describing the procedure for ballast management? This should include safety and exchange procedures (usually provided by vessel's owner or operator). Check Yes or No.

**Management Plan implemented?:** Do you follow the above management plan? Check Yes or No.

**IMO Ballast Water Guidelines on board**?: Is there a copy of the International Maritime Organization (IMO) Ballast Water Guidelines on board this vessel (i.e. "Guidelines for the Control and Management of Ship's Ballast Water to Minimize the Transfer Aquatic Organisms and Pathogens", [Res. A.868(20)])? Check Yes or No.

## SECTION 5. BALLAST WATER HISTORY

### (Record all tanks to be deballasted in port state of arrival: If none, go to #6)

**Tanks/Holds:** Please list all tanks and holds that you have discharged or plan to discharge into waters of the United States or

into an approved reception facility (write out, or use codes listed below table). Follow each tank across the page listing all source(s), exchange events, and/or discharge events separately. List each tank on a separate line. Port and starboard tanks with identical ballast water histories may be included on same line. Please use an additional page if necessary, being careful to include ship name, date, and IMO number at the top of each. For tanks with multiple sources: list 3 largest sources from last 30 days on separate lines. If more than 3 sources, include a 4th line for the respective tank(s) that indicated "Multiple" in port column and list the remaining tank volume not included in the 3 largest sources (i.e., total tank volume minus volume of the 3 largest sources). See example #1 on sample ballast reporting form.

***-BW SOURCES***

**Date:** Record date of ballast water uptake. Use European format (DDMMYY).

**Port or latitude/longitude:** Record location of ballast water uptake, no abbreviations for ports.

**Volume:** Record total volume of ballast water uptake, with volume units.

**Temp:** Record water temperature at time of ballast water uptake, in degrees Celsius (include units).

***-BW MANAGEMENT PRACTICES-***

**Date:** Date of ballast water management practice. If exchanges occurred over multiple days, list the day when exchanges were completed. Use European format (DDMMYY).

**Endpoint or latitude/longitude:** Report location of ballast water management practice. If an exchange occurred over an extended distance, list the end point latitude and longitude.

**Volume:** Report total volume of ballast water moved (i.e., gravitated and pumped into tanks, discharged to reception facility) during management practice , with units.

**% Exch.:** (Note: for effective flow through exchange, this value should be at least 300%).

$$\%\ Exchange = \frac{\text{Total Volume added by Refill or Flow Through}}{\text{Capacity of Ballast Tank or Hold}} \times (100\%)$$

**Method:** Indicate management method using code (ER = empty/refill, FT = flow through, ALT = alternative method).

**Sea Ht . (m):** Estimate the sea height in meters at the time of the ballast water exchange if this method was used. (Note: this is the combined height of the wind-seas and swell, and does not refer to water depth).

***-BW DISCHARGES-***

**Date:** Date of ballast water discharge. Use European format (DDMMYY).

**Port or latitude/longitude:** Report location of ballast water discharge, no abbreviations for ports.

**Volume:** Report volume of ballast water discharged, with units.

**Salinity:** Document salinity of ballast water at the time of discharge, with units (i.e., specific gravity (sg) or parts per thousand (ppt)).

## SECTION 6. TITLE AND SIGNATURE

**Responsible officer's name and title (printed) and signature:** Print name and title, include signature.

# BALLAST WATER REPORTING FORM

**IS THIS AN AMENDED BALLAST REPORTING FORM? YES ☐ NO ☐**

**1. VESSEL INFORMATION**

| | |
|---|---|
| Vessel Name: | |
| IMO Number: | |
| Owner: | |
| Type: | |
| GT: | |
| Call Sign: | |
| Flag: | |

**2. VOYAGE INFORMATION**

| | |
|---|---|
| Arrival Port: | |
| Arrival Date: | |
| Agent: | |
| Last Port: | Country of Last Port: |
| Next Port: | Country of Next Port: |

**3. BALLAST WATER USAGE AND CAPACITY**

***Specify Units Below ($m^3$, MT, LT, ST)***

Total Ballast Water on Board:

| Volume | Units | No. of Tanks in Ballast |
|---|---|---|
| | | |

Total Ballast Water Capacity:

| Volume | Units | Total No. of Tanks on Ship |
|---|---|---|
| | | |

**4. BALLAST WATER MANAGEMENT** Total No. Ballast Water Tanks to be discharged: ☐

Of tanks to be discharged, how many: Underwent Exchange: ☐ Underwent Alternative Management: ☐

Please specify alternative method(s) used, if any: _____

If no ballast treatment conducted, state reason why not: _____

Ballast management plan on board? YES ☐ NO ☐ Management plan implemented? YES ☐ NO ☐

IMO ballast water guidelines on board [res. A.868(20)]? YES ☐ NO ☐

**5. BALLAST WATER HISTORY: Record all tanks to be deballasted in port state of arrival; IF NONE, GO TO #6** ***(Use additional sheets as needed)***

| Tanks/ Holds List multiple sources/tanks separately | BW SOURCES | | | | BW MANAGEMENT PRACTICES | | | | | | BW DISCHARGES | | | |
|---|---|---|---|---|---|---|---|---|---|---|---|---|---|---|
| | DATE DD/MM/YY | PORT or LAT. LONG. | VOLUME (units) | TEMP (units) | DATE DD/MM/YY | ENDPOINT LAT. LONG. | VOLUME (units) | % Exch | METHOD (ER/FT/ ALT) | SEA HT. (m) | DATE DD/MM/YY | PORT or LAT. LONG. | VOLUME (units) | SALINITY (units) |
| | | | | | | | | | | | | | | |
| | | | | | | | | | | | | | | |
| | | | | | | | | | | | | | | |
| | | | | | | | | | | | | | | |
| | | | | | | | | | | | | | | |
| | | | | | | | | | | | | | | |
| | | | | | | | | | | | | | | |

**Ballast Water Tank Codes: Forepeak = FP, Aftpeak = AP, Double Bottom = DB, Wing = WT, Topside = TS, Cargo Hold = CH, Other = O**

**6. RESPONSIBLE OFFICER'S NAME AND TITLE, PRINTED AND SIGNATURE:**

Where to send this form.

| Vessels equipped with ballast water tanks bound for all ports or places within the waters of the United States after operating outside the EEZ (which includes the equivalent zone of Canada). | |
|---|---|
| Bound for | You must submit your report as detailed below. |
| The Great Lakes | Fax the information at least 24 hours before the vessel arrives in Montreal, Quebec, to the USCG COTP Buffalo, Massena Detachment (315–769–5032) or to the Saint Lawrence Seaway Development Corporation (315–764–3250).<br>In lieu of faxing, vessels that are not U.S. or Canadian flagged may complete the ballast water information section of the St. Lawrence Seaway ''Pre-entry Information from Foreign Flagged Vessel Form''. |
| Hudson River north of the George Washington Bridge. | Fax the information to the COTP New York at (718–354–4249) at least 24 hours before the vessel arrives at New York, New York.<br>*NOTE: Vessels entering COTP New York Zone which are not bound up the Hudson River north of George Washington Bridge should submit the form in accordance with the instructions in the following block. |
| All other U.S. Ports | Report before departing the port or place of departure if voyage is less than 24 hours, or at least 24 hours before arrival at the port or place of destination if the voyage exceeds 24 hours; and submit the required information to the National Ballast Information Clearinghouse (NBIC) by one of the following means:<br>Via the Internet at *http://invasions.si.edu/NBIC/bwform.html;* E-mail to *NBIC@BALLASTREPORT.ORG*; Fax to 301–261–4319; or Mail the information to U.S. Coast Guard, c/o SERC. P.O. Box 28, Edgewater, MD 21037–0028. |

| Vessels that have not operated outside the EEZ, which are equipped with ballast water tanks and are bound for all ports or places within the waters of the United States. | |
|---|---|
| Bound for | You must submit your report as detailed below: |
| All U.S. ports including the Great Lakes and Hudson River North of George Washington Bridge. | Report before departing the port or place of departure if voyage is less than 24 hours, or at least 24 hours before arrival at the port or place of destination if the voyage exceeds 24 hours; and submit the required information to the National Ballast Information Clearinghouse (NBIC) by one of the following means:<br>Via the Internet at *http://invasions.si.edu/NBIC/bwform.html*; E-mail to *NBIC@BALLASTREPORT.ORG;* Fax to 301–261–4319; or Mail to U.S. Coast Guard, c/o SERC, P.O. Box 28, Edgewater, MD 21037–0028. |

If any information changes, send an amended form before the vessel departs the waters of the United States.

An agency may not conduct or sponsor, and a person is not required to respond to a collection of information unless it displays a valid OMB control number. The Coast Guard estimates that the average burden for this report is 35 minutes. You may submit any comments concerning the accuracy of this burden estimate or any suggestions for reducing the burden to: Commandant (CG–524), U.S. Coast Guard, 2100 2nd St., SW. Stop 7126, Washington, DC 20593–7126, or Office of Management and Budget, Paperwork Reduction Project (1625–0069), Washington, DC 20503.

[USCG–1998–3423, 64 FR 26682, May 17, 1999, as amended at 66 FR 58391, Nov. 21, 2001; USCG–2002–13147, 69 FR 32870, June 14, 2004; USCG–2005–21531, 70 FR 36349, June 23, 2005; USCG–2008–0179, 73 FR 35014, June 19, 2008; USCG–2010–0351, 75 FR 36284, June 25, 2010]

## Subpart E—Definition of Marine Debris for the Purposes of the Marine Debris Research, Prevention, and Reduction Act

AUTHORITY: 33 U.S.C. 1951–1958 (2006); 33 CFR 1.05–1; Department of Homeland Security Delegation No. 0170.1.

### § 151.3000 Definition of marine debris for the purposes of the Marine Debris Research, Prevention, and Reduction Act.

(a) *Marine debris*. For the purposes of the Marine Debris Research, Prevention, and Reduction Act (33 U.S.C. 1951–1958 (2006)) only, marine debris is defined as any persistent solid material that is manufactured or processed and directly or indirectly, intentionally or unintentionally, disposed of or abandoned into the marine environment or the Great Lakes.

(b) NOAA and the Coast Guard have jointly promulgated the definition of marine debris in this part. NOAA's regulation may be found in 15 CFR part 909.

[74 FR 45560, Sept. 3, 2009]

# PART 153—CONTROL OF POLLUTION BY OIL AND HAZARDOUS SUBSTANCES, DISCHARGE REMOVAL

## Subpart A—General

Sec.
153.101 Purpose.
153.103 Definitions.
153.105 FWPCA delegations and redelegation.
153.107 [Reserved]
153.109 CERCLA delegations.

## Subpart B—Notice of the Discharge of Oil or a Hazardous Substance

153.201 Purpose.
153.203 Procedure for the notice of discharge.
153.205 Fines.

## Subpart C—Removal of Discharged Oil

153.301 Purpose.
153.303 Applicability.
153.305 Methods and procedures for the removal of discharged oil.
153.307 Penalties.

## Subpart D—Administration of the Pollution Fund

153.401 Purpose.
153.403 Applicability.
153.405 Liability to the pollution fund.
153.407 Payments or reimbursement from the pollution fund.
153.411 Procedures for payment of judgments.
153.413 Deposit of money into the fund.
153.415 Cost summary reports.
153.417 Reimbursement for actions under section 311(c) or 311(d) of the Act of the Intervention on the High Seas Act.

AUTHORITY: 14 U.S.C. 633; 33 U.S.C. 1321, 1903, 1908; 42 U.S.C. 9615; 46 U.S.C. 6101; E.O. 12580, 3 CFR, 1987 Comp., p. 193; E.O. 12777, 3 CFR, 1991 Comp., p. 351; Department of Homeland Security Delegation No. 0170.1.

SOURCE: CGD 73–185, 41 FR 12630, Mar. 25, 1976, unless otherwise noted.

## Subpart A—General

### § 153.101 Purpose.

The purpose of this part is to prescribe regulations concerning notification to the Coast Guard of the discharge of oil or hazardous substances as required by the Federal Water Pollution Control Act, as amended (FWPCA); the procedures for the removal of a discharge of oil; and the costs that may be imposed or reimbursed for the removal of a discharge of oil or hazardous substances under the FWPCA.

[CGD 84–067, 51 FR 17965, May 16, 1986]

### § 153.103 Definitions.

As used in this part:

(a) *Act* means the Federal Water Pollution Control Act, as amended (33 U.S.C. 1251 *et seq.*).

(b) *CERCLA* means the Comprehensive Environmental Response, Compensation, and Liability Act of 1980 (42 U.S.C. 9601 *et seq.*).

(c) *Chemical agents* means those elements, compounds, or mixtures that coagulate, disperse, dissolve, emulsify, foam, neutralize, precipitate, reduce, solubilize, oxidize, concentrate, congeal, entrap, fix, make the pollutant mass more rigid or viscous, or otherwise facilitate the mitigation of deleterious effects or removal of the pollutant from the water. The term ''chemical agents'' as used in this part includes dispersants, surface collecting agents, biological additives, burning agents, and sinking agents as defined in Subpart H of the National Contingency Plan.

(d) *Assistant Commandant for Marine Safety, Security and Environmental Protection* means the Coast Guard Officer designated by the Commandant to assist and advise the Commandant on matters related to marine environmental response, port and environmental safety, and waterways management.

(e) *Coastal waters* means all U.S. waters subject to the tide, U.S. waters of the Great Lakes, specified ports and harbors on the inland rivers, waters of the contiguous zone, or other waters of the high seas subject to discharges in connection with activities under the Outer Continental Shelf Lands Act (43 U.S.C. 1331 *et seq.*) or the Deepwater Port Act of 1974 (33 U.S.C. 1501 *et seq.*), or which may affect natural resources belonging to, appertaining to, or under the exclusive management authority of the United States (including resources under the Magnuson Fishery Conservation and Management Act (16 U.S.C. 1801 *et seq.*)). These waters include those contained within the Exclusive

Economic Zone declared by Presidential Proclamation 5030 on March 10, 1983 (43 FR 10605).

NOTE: Coastal waters are those waters where the Coast Guard has the responsibility for providing On-Scene Coordinators under the National Contingency Plan. Specific dividing lines between coastal and inland waters, and the identification of specified ports and harbors on inland rivers, are contained in Regional Contingency Plans prepared pursuant to the National Contingency Plan.

(f) *Contiguous zone* means the entire zone established by the United States under Article 24 of the Convention on the Territorial Sea and the Contiguous Zone, as published in the June 1, 1972 issue of the FEDERAL REGISTER (37 FR 11906).

(g) *Discharge* includes, but is not limited to, any spilling, leaking, pumping, pouring, emitting, emptying, or dumping, but excludes (A) discharges in compliance with a permit under Section 402 of the Act, (B) discharges resulting from circumstances identified and reviewed and made part of the public record with respect to a permit issued or modified under Section 402 of the Act, and subject to a condition in such permit, and (C) continuous or anticipated intermittent discharges from a point source, identified in a permit or permit application under section 402 of the Act, which are caused by events occurring within the scope of relevant operating or treatment systems.

(h) *Hazardous substance* means any substance designated by the Administrator of the Environmental Protection Agency pursuant to section 311(b)(2) of the Act.

(i) *Inland waters* means all other waters of the U.S. not included in the definition of coastal waters.

NOTE: Inland waters are those waters where the Environmental Protection Agency has the responsibility for providing On-Scene Coordinators under the National Contingency Plan. Specific dividing lines between coastal and inland waters are contained in Regional Contingency Plans prepared pursuant to the National Contingency Plan.

(j) *Mechanical removal* means the use of pumps, skimmers, booms, earthmoving equipment, and other mechanical devices to contain the discharge of oil and to recover the discharge from the water or adjoining shorelines.

(k) *Navigable waters* means the waters of the United States as defined in paragraph 2.36(b) of this Chapter.

(l) *Offshore facility* means any facility of any kind located in, on, or under, any of the navigable waters of the United States, and any facility of any kind which is subject to the jurisdiction of the United States and is located in, on, or under any other waters, other than a vessel or a public vessel.

(m) *Oil* means oil of any kind or in any form, including but not limited to petroleum, fuel oil, sludge, oil refuse, and oil mixed with wastes other than dredged spoil.

(n) *On-Scene Coordinator* or *OSC* is the Federal official predesignated by the Environmental Protection Agency (EPA) or Coast Guard to coordinate and direct Federal removal efforts at the scene of an oil or hazardous substance discharge as prescribed in the National Oil and Hazardous Substances Pollution Contingency Plan (National Contingency Plan) as published in 40 CFR part 300.

(o) *Onshore facility* means any facility (including, but not limited to, motor vehicles and rolling stock) of any kind located in, on, or under, any land within the United States other than submerged land.

(p) *Person* includes an individual, firm, corporation, association, and a partnership.

(q) *Pollution Fund* and *Fund* means the revolving fund established in the Treasury under the authority in section 311(k) of the Act to carry out the provisions of section 311 (c), (d), (i), and (l) of the Act.

(r) *Public vessel* means a vessel owned or bare-boat chartered and operated by the United States, or by a State or political subdivision thereof, or by a foreign nation, except when such vessel is engaged in commerce.

(s) *Remove* or *Removal* refers to removal of oil or hazardous substances from the waters and shorelines or the taking of such other actions as may be necessary to minimize or mitigate damage to the public health or welfare, including, but not limited to, fish, shellfish, wildlife, and public and private property, shorelines, and beaches.

(t) *Sorbent* means materials essentially inert and insoluble used to remove oil from water through a variety of sorption mechanisms. Examples include straw, expanded perlite, polyurethane foam, reclaimed paper fibers, and peat moss.

(u) *Such quantities as may be harmful* means those quantities of oil and any hazardous substances determined in accordance with the provisions of section 311(b)(4) of the Act.

NOTE: Regulations that relate to such quantities as may be harmful of oil are published in 40 CFR part 110. Regulations that relate to such quantities as may be harmful (reportable quantities) of hazardous substances are published in 40 CFR part 117 and also listed in 40 CFR part 302.

(v) *United States* means the States, the District of Columbia, the Commonwealth of Puerto Rico, Guam, American Samoa, the Virgin Islands, and the Trust Territory of the Pacific Islands.

(w) *Vessel* means every description of watercraft or other artificial contrivance used, or capable of being used, as a means of transportation on water other than a public vessel.

[CGD 84–067, 51 FR 17965, May 16, 1986, as amended by CGD 88–052, 53 FR 25121, July 1, 1988; CGD 96–026, 61 FR 33665, June 28, 1996; CGD 97–023, 62 FR 33363, June 19, 1997; USCG–2002–12471, 67 FR 41333, June 18, 2002; USCG–2008–0179, 73 35014, June 19, 2008]

### § 153.105 FWPCA delegations and redelegation.

The delegations and redelegations under the Federal Water Pollution Control Act (FWPCA) [33 U.S.C. 1321 *et seq.*] are published in § 1.01–80 and § 1.01–85, respectively, of this chapter.

[CGD 91–225, 59 FR 66485, Dec. 27, 1994]

### § 153.107 [Reserved]

### § 153.109 CERCLA delegations.

The delegations under the Comprehensive Environmental Response, Compensation, and Liability Act of 1980 (CERCLA) are published in § 1.01–70 of this chapter.

[CGD 83–009, 49 FR 575, Jan. 5, 1984]

## Subpart B—Notice of the Discharge of Oil or a Hazardous Substance

### § 153.201 Purpose.

The purpose of this subpart is to prescribe the manner in which the notice required in section 311(b)(5) of the Act is to be given and to list the government officials to receive that notice.

### § 153.203 Procedure for the notice of discharge.

Any person in charge of a vessel or of an onshore or offshore facility shall, as soon as they have knowledge of any discharge of oil or a hazardous substance from such vessel or facility in violation of section 311(b)(3) of the Act, immediately notify the National Response Center (NRC), U.S. Coast Guard, 2100 2nd St., SW., Stop 7238, Washington, DC 20593–7238, *toll free telephone number*: 800–424–8802, *direct telephone:* 202–267–2675, *or Fax:* 202–267–1322. If direct reporting to the NRC is not practicable, reports may be made to the Coast Guard or EPA predesignated OSC for the geographic area where the discharge occurs. All such reports shall be promptly relayed to the NRC. If it is not possible to notify the NRC or the predesignated OSC immediately, reports may be made immediately to the nearest Coast Guard unit, provided that the person in charge of the vessel or onshore or offshore facility notifies the NRC as soon as possible. A report made under this section satisfies the reporting requirements of § 151.15 of this chapter and of 46 CFR 4.05–1, if required under that provision.

NOTE: Geographical jurisdiction of Coast Guard and EPA OSC's are specified in the applicable Regional Contingency Plan. Regional Contingency Plans are available at Coast Guard District Offices and EPA Regional Offices as indicated in Table 2. Addresses and telephone numbers for these offices are listed in Table 1.

[CGD 84–067, 51 FR 17966, May 16, 1986, as amended by CGD 88–052, 53 FR 25121, July 1, 1988; USCG–2000–6927, 70 FR 74675, Dec. 16, 2005; USCG–2006–25150, 71 FR 39209, July 12, 2006; USCG–2008–0179, 73 FR 35014, June 19, 2008; USCG–2010–0351, 75 FR 36284, June 25, 2010]

### § 153.205 Fines.

Section 311(b)(5) of the Act prescribes that any person who fails to notify the appropriate agency of the United States Government immediately of a discharge is, upon conviction, fined in accordance with Title 18, U.S. Code, or imprisoned for not more than 5 years, or both.

TABLE 1—ADDRESSES AND TELEPHONE NUMBERS OF COAST GUARD DISTRICT OFFICES AND EPA REGIONAL OFFICES

| | Address | Telephone |
|---|---|---|
| **EPA Regional Offices** | | |
| Region: | | |
| 1 | 1 Congress St., Suite 1100, Boston, MA 02114–2023 | 617–918–1111 |
| 2 | 290 Broadway, New York, NY 10007–1866 | 212–637–3000 |
| 3 | 1650 Arch St., Philadelphia, PA 19103–2029 | 215–814–5000 |
| 4 | Atlanta Federal Center, 61 Forsyth St., SW, Atlanta, GA 30303–3104 | 404–562–9900 |
| 5 | 77 West Jackson Boulevard, Chicago, IL 60604–3507 | 312–353–2000 |
| 6 | Fountain Place 12th Floor, Suite 1200, 1445 Ross Avenue, Dallas, TX 75202–2733. | 214–665–2200 |
| 7 | 901 North 5th St., Kansas City, KS 66101 | 913–551–7003 |
| 8 | 999 18th St., Suite 500, Denver, CO 80202–2466 | 303–312–6312 |
| 9 | 75 Hawthorne St., San Francisco, CA 94105 | 415–744–1305 |
| 10 | 1200 Sixth Avenue, Seattle, WA 98101 | 206–553–1200 |
| **Coast Guard District Offices** | | |
| District: | | |
| 1st | 408 Atlantic Avenue, Boston, MA 02210–3350 | 617–223–8480 |
| 5th | Federal Building, 431 Crawford St., Portsmouth, VA 23704–5004 | 757–398–6638 |
| 7th | 909 S.E. First Avenue, Miami, FL 33131–3050 | 305–536–5651 |
| 8th | Hale Boggs Federal Bldg., 500 Camp Street, New Orleans, LA 70130–3396. | 504–589–6901 |
| 9th | 1240 E. 9th St., Cleveland, OH 44199–2060 | 216–902–6045 |
| 11th | Coast Guard Island, Building 50–6, Alameda, CA 94501–5100 | 510–437–2940 |
| 13th | Jackson Federal Bldg., 915 Second Avenue, Seattle, WA 98174–1067 | 206–220–7090 |
| 14th | Prince PJKK Federal Bldg., Room 9212, 300 Ala Moana Blvd., Honolulu, HI 96850–4982. | 808–541–2114 |
| 17th | P.O. Box 25517, Juneau, AK 99802–5517 | 907–463–2199 |

TABLE 2—STANDARD ADMINISTRATIVE REGIONS OF STATES AND CORRESPONDING COAST GUARD DISTRICTS AND EPA REGIONS

| States and EPA region | Coast Guard district |
|---|---|
| Region I: | |
| Maine | 1st |
| New Hampshire | 1st |
| Vermont: | |
| All except Northwestern portion | 1st |
| Northwestern portion | 1st |
| Massachusetts | 1st |
| Connecticut | 1st |
| Rhode Island | 1st |
| Region II: | |
| New York: | |
| Coastal area and Eastern portion | 1st |
| Great Lakes area and other portions | 9th |
| New Jersey: | |
| Upper portion | 1st |
| Lower portion | 5th |
| Puerto Rico | 7th |
| Virgin Islands | 7th |
| Region III: | |
| Pennsylvania: | |
| Eastern portion | 5th |
| Great Lakes area | 9th |
| Southwestern portion | 8th |
| Maryland | 5th |
| Delaware | 5th |

TABLE 2—STANDARD ADMINISTRATIVE REGIONS OF STATES AND CORRESPONDING COAST GUARD DISTRICTS AND EPA REGIONS—Continued

| States and EPA region | Coast Guard district |
|---|---|
| West Virginia | 8th |
| Virginia | 5th |
| District of Columbia | 5th |
| Region IV: | |
| Kentucky | 8th |
| Tennessee | 8th |
| North Carolina | 5th |
| South Carolina | 7th |
| Georgia | 7th |
| Florida: | |
| Atlantic and Gulf coasts | 7th |
| Panhandle area | 8th |
| Alabama | 8th |
| Mississippi | 8th |
| Region V: | |
| Minnesota: | |
| Great Lakes area | 9th |
| Inland rivers area | 8th |
| Wisconsin: | |
| Great Lakes area | 9th |
| Inland rivers area | 8th |
| Michigan | 9th |

TABLE 2—STANDARD ADMINISTRATIVE REGIONS OF STATES AND CORRESPONDING COAST GUARD DISTRICTS AND EPA REGIONS—Continued

| States and EPA region | Coast Guard district |
|---|---|
| Illinois: | |
| Great Lakes area | 9th |
| Inland rivers area | 8th |
| Indiana: | |
| Great Lakes area | 9th |
| Inland rivers area | 8th |
| Ohio: | |
| Great Lakes area | 9th |
| Inland rivers area | 8th |
| Region VI: | |
| New Mexico | 8th |
| Texas | 8th |
| Oklahoma | 8th |
| Arkansas | 8th |
| Louisiana | 8th |
| Region VII: | |
| Nebraska | 8th |
| Iowa | 8th |
| Kansas | 8th |
| Missouri | 8th |
| Region VIII: | |
| Montana | 13th |
| Wyoming | 8th |
| Utah | 11th |
| Colorado | 8th |
| North Dakota | 8th |
| South Dakota | 8th |
| Region IX: | |
| California | 11th |
| Nevada | 11th |
| Arizona | 11th |
| Hawaii | 14th |
| Guam | 14th |
| American Samoa | 14th |
| Trust Territory of the Pacific Islands | 14th |
| Northern Mariana Islands | 14th |
| Region X: | |
| Washington | 13th |
| Oregon | 13th |
| Idaho | 13th |
| Alaska | 17th |

[CGD 84–067, 51 FR 17967, May 16, 1986, as amended by CGD 88–052, 53 FR 25121, July 1, 1988; CGD 97–023, 62 FR 33364, June 19, 1997; USCG–1998–3799, 63 FR 35530, June 30, 1998; USCG–2000–7223, 65 FR 40057, June 29, 2000]

## Subpart C—Removal of Discharged Oil

### § 153.301 Purpose.

The purpose of this subpart is to prescribe methods and procedures to be used to remove discharges of oil from coastal waters.

### § 153.303 Applicability.

The provisions of this subpart apply to any owner or operator of a vessel or onshore or offshore facility from which a discharge of oil into coastal waters occurs who acts to remove or arranges for the removal of such discharges.

### § 153.305 Methods and procedures for the removal of discharged oil.

Each person who removes or arranges for the removal of a discharge of oil from coastal waters shall:

(a) Use to the maximum extent possible mechanical methods and sorbents that:

(1) Most effectively expedite removal of the discharged oil; and

(2) Minimize secondary pollution from the removal operations;

NOTE: The Federal OSC is authorized by the provisions of the National Contingency Plan to require or deny the use of specific mechanical methods and sorbents. Sorbent selection considerations of the OSC include hydrographic and meteorological conditions, characteristics of the sorbent, and availability of a mechanical method for containment and recovery.

(b) Control the source of discharge, prevent further discharges, and halt or slow the spread of the discharge by mechanical methods or sorbents or both to the maximum extent possible;

(c) Recover the discharged oil from the water or adjoining shorelines by mechanical or manual methods or both to the maximum extent possible;

(d) Use chemical agents only in accordance with the provisions of Subpart H of the National Contingency Plan and with the prior approval of the Federal OSC; and

(e) Dispose of recovered oil and oil contaminated materials in accordance with applicable State and local government procedures.

[CGD 73–185, 41 FR 12630, Mar. 25, 1976, as amended by CGD 84–067, 51 FR 17966, May 16, 1986]

### § 153.307 Penalties.

Any person who fails or refuses to comply with the provisions of this part, or to comply with an order issued by the Federal On-Scene Coordinator under 33 U.S.C. §§ 1321(c) or (e)(1)(B), is liable for a civil penalty per day of violation or an amount equal to three times the costs incurred by the Oil Spill Liability Trust Fund as a result of such failure.

[USCG–1998–3799, 63 FR 35531, June 30, 1998]

## Subpart D—Administration of the Pollution Fund

### § 153.401 Purpose.

This subpart prescribes policies, procedures, and reporting requirements for the payment from and deposit into the Fund established pursuant to section 311(k) of the Act.

### § 153.403 Applicability.

The provisions of this subpart apply to:

(a) Each Federal and State agency that desires reimbursement from the Fund for costs incurred during a removal activity; and

(b) The owner or operator of the vessel or onshore or offshore facility from which a discharge occurs that requires Federal removal activity.

### § 153.405 Liability to the pollution fund.

The owner or operator of the vessel or onshore or offshore facility from which a discharge occurs that requires Federal removal activity is liable to the pollution fund for the actual costs of Federal and State agencies, including the employment and use of personnel and equipment, not to exceed the limits established by sections 311(f) and (g) of the Act.

### § 153.407 Payments or reimbursements from the pollution fund.

(a) The following costs incurred during performance of a Phase III activity as defined in Subpart E of the National Contingency Plan, or a removal action as defined in Subpart F of the National Contingency Plan, are reimbursable to Federal and State agencies when authorized by the appropriate OSC under the authority of section 311(c) of the Act, and are reimbursable to Federal agencies when authorized by the appropriate Coast Guard or EPA official in the case of the summary removal or destruction of a vessel, other ''intervention'' (as defined in § 153.105(e) of this part), or any other action under the authority of section 311(d) of the Act or the Intervention on the High Seas Act (33 U.S.C. 1471 *et seq.*):

(1) Costs found to be reasonable by the Coast Guard incurred by government industrial type facilities, including charges for overhead in accordance with the agency's industrial accounting system.

(2) Actual costs for which an agency is required or authorized by any law to obtain full reimbursement.

(3) Costs found to be reasonable by the Coast Guard incurred as a result of removal activity that are not ordinarily funded by an agency's regular appropriations and that are not incurred during normal operations. These costs include, but are not limited to, the following:

(i) Travel (transportation and per diem) specifically requested of the agency by the On-Scene Coordinator.

(ii) Overtime for civilian personnel specifically requested of the agency by the On-Scene Coordinator.

(iii) Incremental operating costs for vessels, aircraft, vehicles, and equipment incurred in connection with the removal activity.

(iv) Supplies, materials, and equipment procured for the specific removal activity and fully expended during the removal activity.

(v) Lease or rental of equipment for the specific removal activity.

(vi) Contract costs for the specific removal activity.

(4) Claims payable under part 25, subpart H of this title.

(b) The District Commander may authorize the direct payment of the costs found to be reasonable under paragraph (a)(3) of this section. Direct payment may only be made to Federal or State agencies, or to Federal contractors or suppliers. Direct payments to State or local agency contractors or suppliers will not be authorized.

(c) The Pollution Fund is not available to pay any foreign, Federal, State or local government or agency for the payment or reimbursement of its costs incurred in the removal of oil or hazardous substances discharged from a vessel or facility that it owns or operates.

NOTE: Federal procurement procedures governing contracts to purchase property and services apply to costs incurred as a result of removal activity. Where the public exigency will not permit the delay incident to advertising, purchases and contracts are

negotiated pursuant to 10 U.S.C. 2304(a)(2) or 41 U.S.C. 252(c)(2), as applicable.

[CGD 73–185, 41 FR 12630, Mar. 25, 1976, as amended by CGD 84–067, 51 FR 17967, May 16, 1986]

### § 153.411 Procedures for payment of judgments.

An owner or operator of a vessel or an onshore or offshore facility who obtains a judgment against the United States under section 311(i) of the Act may have the judgment satisfied by requesting payment of the judgment in writing from the Commandant (CG–094), 2100 2nd St., SW., Stop 7238, Washington, DC 20593–7238. This request must be accompanied by a copy of the judgment and must designate to whom payment should be made.

[CGD 73–185, 41 FR 12630, Mar. 25, 1976, as amended at USCG–2010–0351, 75 FR 36284, June 25, 2010]

### § 153.413 Deposit of money into the fund.

Any person liable for the payment of the following shall remit payment by check or postal money order, payable to the U.S. Coast Guard, to the cognizant District Commander, or to the Commandant for deposit into the Pollution Fund as prescribed in section 311(k) of the Act:

(a) A fine or penalty imposed, assessed, or compromised under section 311 of the Act, including the proceeds of a bond or other surety obtained pursuant to section 311(b)(6).

(b) A claim asserted by the cognizant District Commander for costs recoverable under sections 311 (f) and (g) of the Act.

(c) A judgment obtained by the United States for costs recoverable under sections 311 (f) and (g) of the Act.

### § 153.415 Cost summary reports.

As soon as practicable after completion of an action authorized under section 311 (c) or (d) of the Act or the Intervention on the High Seas Act, the OSC submits a cost summary report to the cognizant District Commander that includes:

(a) Names of agencies and contractors authorized to participate in the action;

(b) A general description of the function performed by each participating agency and contractor;

(c) An estimate of the cost of each function performed by each participating agency and contractor; and

(d) A copy of contracts, memoranda, or other documents pertaining to the functions performed by the participating agencies and contractors.

[CGD 73–185, 41 FR 12630, Mar. 25, 1976, as amended by CGD 84–067, 51 FR 17967, May 16, 1986]

### § 153.417 Reimbursement for actions under section 311(c) or 311(d) of the Act of the Intervention on the High Seas Act.

(a) Each Federal or State agency requesting reimbursement for an action authorized under section 311(c) or 311(d) of the Act or under the Intervention on the High Seas Act must, within 60 days after completion of the action, submit to the cognizant District Commander, through the OSC for review and certification required in paragraph (b) of this section, lists accompanied by supporting accounting data, itemizing actual costs incurred.

(b) Requests for reimbursement submitted by Federal and State agencies are reviewed by the OSC to ensure that the costs for which reimbursement is being sought were authorized as Phase III removal actions for oil discharges, or removal actions as defined in Subpart F for hazardous substance discharges, and must have one of the following certifications by the OSC, as appropriate:

(1) I certify that the actions for which reimbursement is being requested in the attached statements were authorized by me as [(Phase III oil removal actions) or (hazardous substance removal actions)], and reasonable costs related thereto are proper for payment from the Pollution Fund.

_____
(OSC signature)

_____
(Incident title)

_____
(Pollution incident project number)

(2) I certify that, except as noted below, the actions for which reimbursement is being requested in the attached statements were authorized by me as

[(Phase III oil removal actions) or (hazardous substance removal actions)], and reasonable costs related thereto are proper for payment from the Pollution Fund. The following actions were not authorized by me and are not subject to reimbursement from the Pollution Fund:

(OSC Signature)

(Incident title)

(Pollution incident project number)

[CGD 84–067, 51 FR 17967, May 16, 1986]

# PART 154—FACILITIES TRANSFERRING OIL OR HAZARDOUS MATERIAL IN BULK

## Subpart A—General

Sec.
154.100 Applicability.
154.105 Definitions.
154.106 Incorporation by reference: Where can I get a copy of the publications incorporated by reference in this part?
154.107 Alternatives.
154.108 Exemptions.
154.110 Letter of intent.
154.120 Facility examinations.
154.T150 Temporary suspension of requirements to permit support of deepwater horizon spill response.

## Subpart B—Operations Manual

154.300 Operations manual: General.
154.310 Operations manual: Contents.
154.320 Operations manual: Amendment.
154.325 Operations manual: Procedures for examination.

## Subpart C—Equipment Requirements

154.500 Hose assemblies.
154.510 Loading arms.
154.520 Closure devices.
154.525 Monitoring devices.
154.530 Small discharge containment.
154.540 Discharge removal.
154.545 Discharge containment equipment.
154.550 Emergency shutdown.
154.560 Communications.
154.570 Lighting.

## Subpart D—Facility Operations

154.700 General.
154.710 Persons in charge: Designation and qualification.
154.730 Persons in charge: Evidence of designation.
154.735 Safety requirements.
154.740 Records.
154.750 Compliance with operations manual.

## Subpart E—Vapor Control Systems

154.800 Applicability.
154.802 Definitions.
154.804 Review, certification, and initial inspection.
154.806 Application for acceptance as a certifying entity.
154.808 Vapor control system, general.
154.810 Vapor line connections.
154.812 Facility requirements for vessel liquid overfill protection.
154.814 Facility requirements for vessel vapor overpressure and vacuum protection.
154.820 Fire, explosion, and detonation protection.
154.822 Detonation arresters, flame arresters, and flame screens.
154.824 Inerting, enriching, and diluting systems.
154.826 Vapor compressors and blowers.
154.828 Vapor recovery and vapor destruction units.
154.840 Personnel training.
154.850 Operational requirements.

## Subpart F—Response Plans for Oil Facilities

154.1010 Purpose.
154.1015 Applicability.
154.1016 Facility classification by COTP.
154.1017 Response plan submission requirements.
154.1020 Definitions.
154.1025 Operating restrictions and interim operating authorization.
154.1026 Qualified individual and alternate qualified individual.
154.1028 Methods of ensuring the availability of response resources by contract or other approved means.
154.1029 Worst case discharge.
154.1030 General response plan contents.
154.1035 Specific requirements for facilities that could reasonably be expected to cause significant and substantial harm to the environment.
154.1040 Specific requirements for facilities that could reasonably be expected to cause substantial harm to the environment.
154.1041 Specific response information to be maintained on mobile MTR facilities.
154.1045 Response plan development and evaluation criteria for facilities that handle, store, or transport Group I through Group IV petroleum oils.
154.1047 Response plan development and evaluation criteria for facilities that handle, store, or transport Group V petroleum oils.
154.1050 Training.

154.1055 Exercises.
154.1057 Inspection and maintenance of response resources.
154.1060 Submission and approval procedures.
154.1065 Plan review and revision procedures.
154.1070 Deficiencies.
154.1075 Appeal process.

### Subpart G—Additional Response Plan Requirements for a Trans-Alaska Pipeline Authorization Act (TAPAA) Facility Operating in Prince William Sound, Alaska

154.1110 Purpose and applicability.
154.1115 Definitions.
154.1120 Operating restrictions and interim operating authorization.
154.1125 Additional response plan requirements.
154.1130 Requirements for prepositioned response equipment.
154.1135 Response plan development and evaluation criteria.
154.1140 TAPAA facility contracting with a vessel.

### Subpart H—Response Plans for Animal Fats and Vegetable Oils Facilities

154.1210 Purpose and applicability.
154.1216 Facility classification.
154.1220 Response plan submission requirements.
154.1225 Specific response plan development and evaluation criteria and other requirements for fixed facilities that handle, store, or transport animal fats or vegetable oils.
154.1228 Methods of ensuring the availability of response resources by contract or other approved means.
154.1240 Specific requirements for animal fats and vegetable oils facilities that could reasonably be expected to cause substantial harm to the environment.

### Subpart I—Response Plans for Other Non-Petroleum Oil Facilities

154.1310 Purpose and applicability.
154.1320 Response plan submission requirements.
154.1325 Response plan development and evaluation criteria for facilities that handle, store, or transport other non-petroleum oils.

APPENDIX A TO PART 154—GUIDELINES FOR DETONATION FLAME ARRESTERS
APPENDIX B TO PART 154—STANDARD SPECIFICATION FOR TANK VENT FLAME ARRESTERS
APPENDIX C TO PART 154—GUIDELINES FOR DETERMINING AND EVALUATING REQUIRED RESPONSE RESOURCES FOR FACILITY RESPONSE PLANS
APPENDIX D TO PART 154—TRAINING ELEMENTS FOR OIL SPILL RESPONSE PLANS

AUTHORITY: 33 U.S.C. 1231, 1321(j)(1)(C), (j)(5), (j)(6), and (m)(2); sec. 2, E.O. 12777, 56 FR 54757; Department of Homeland Security Delegation No. 0170.1. Subpart F is also issued under 33 U.S.C. 2735.

## Subpart A—General

### § 154.100 Applicability.

(a) This part applies to each facility that is capable of transferring oil or hazardous materials, in bulk, to or from a vessel, where the vessel has a total capacity, from a combination of all bulk products carried, of 39.75 cubic meters (250 barrels) or more. This part does not apply to the facility when it is in a caretaker status. This part does not apply to any offshore facility operating under the jurisdiction of the Secretary of the Department of Interior.

(b) Upon written notice to the facility operator, the COTP may apply, as necessary for the safety of the facility, its personnel, or the public, all or portions of § 154.735 to each facility that is capable of transferring oil or hazardous material, in bulk, only to or from a vessel with a capacity of less than 250 barrels. If the facility is in caretaker status, the COTP may not apply the provisions of § 154.735 to the facility if its storage tanks and piping are gas free.

(c) Upon a determination by the COTP under § 154.1016 that an MTR facility, as defined in subpart F, could reasonably be expected to cause substantial harm to the environment by discharging oil into or on the navigable waters, adjoining shorelines, or exclusive economic zone, subpart F of this part is applicable to the facility.

(d) The following sections of this part apply to mobile facilities:

(1) Section 154.105 Definitions.

(2) Section 154.107 Alternatives.

(3) Section 154.108 Exemptions.

(4) Section 154.110 Letter of Intent.

(5) Section 154.120 Facility examinations.

(6) Section 154.300 Operations Manual: General.

(7) Section 154.310 Operations Manual: Contents. Paragraphs (a)(2), (a)(3), (a)(5) through (a)(7), (a)(9), (a)(12), (a)(14), (a)(16), (a)(17)(ii) through

(a)(17)(iv), (a)(18), (a)(20) through (23), (c) and (d).

(8) Section 154.320 Operations Manual: Amendment.

(9) Section 154.325 Operations Manual: Procedures for examination.

(10) Section 154.500 Hose assemblies. Paragraphs (a), (b), (c), (d)(1) through (3) and (e)(1) through (3).

(11) Section 154.520 Closure devices.

(12) Section 154.530 Small discharge containment. Paragraphs (a)(1) through (3) and (d).

(13) Section 154.545 Discharge containment equipment.

(14) Section 154.550 Emergency shutdown.

(15) Section 154.560 Communications.

(16) Section 154.570 Lighting. Paragraphs (c) and (d).

(17) Section 154.700 General.

(18) Section 154.710 Persons in charge: Designation and qualification. Paragraphs (a) through (c), (d)(1) through (3), (d)(7) and (e).

(19) Section 154.730 Persons in charge: Evidence of designation.

(20) Section 154.735 Safety requirements. Paragraphs (d), (f), (g), (j)(1) through (2), (k)(1) through (2), (m), (o) through (q), (r)(1) through (3), (s) and (v).

(21) Section 154.740 Records. Paragraphs (a) through (f) and (j).

(22) Section 154.750 Compliance with Operations Manual.

[CGD 86–034, 55 FR 36252, Sept. 4, 1990, as amended by CGD 91–036, 58 FR 7352, Feb. 5, 1993; CGD 93–056, 61 FR 41457, Aug. 8, 1996]

### § 154.105 Definitions.

As used in this part:

*Barrel* means a quantity of liquid equal to 42 U.S. gallons.

*Boundary Line* means any of the lines described in 46 CFR part 7.

*Captain of the Port* (COTP) means the U.S. Coast Guard officer commanding a Captain of the Port Zone described in part 3 of this chapter, or that person's authorized representative.

*Caretaker status* denotes a facility where all piping, hoses, loading arms, storage tanks, and related equipment in the marine transfer area are completely free of oil or hazardous materials, where these components have been certified as being gas free, where piping, hoses, and loading arms terminating near any body of water have been blanked, and where the facility operator has notified the COTP that the facility will be in caretaker status.

*Commandant* means the Commandant of the Coast Guard or an authorized representative.

*Contiguous Zone* means the entire zone established by the United States under Article 24 of the Convention on the Territorial Sea and the Contiguous Zone, but not extending beyond 12 miles from the baseline from which the breadth of the territorial sea is measured.

*District Commander* means the officer of the Coast Guard designated by the Commandant to command a Coast Guard District, as described in part 3 of this chapter or an authorized representative.

*Facility* means either an onshore or offshore facility, except for an offshore facility operating under the jurisdiction of the Secretary of the Department of Interior, and includes, but is not limited to, structure, equipment, and appurtenances thereto, used or capable of being used to transfer oil or hazardous materials to or from a vessel or public vessel. Also included are facilities that tank clean or strip and any floating structure that is used to support an integral part of the facility's operation. A facility includes federal, state, municipal, and private facilities.

*Facility operator* means the person who owns, operates, or is responsible for the operation of the facility.

*Hazardous material* means a liquid material or substance, other than oil or liquefied gases, listed under 46 CFR 153.40 (a), (b), (c), or (e).

*Marine transfer area* means that part of a waterfront facility handling oil or hazardous materials in bulk between the vessel, or where the vessel moors, and the first manifold or shutoff valve on the pipeline encountered after the pipeline enters the secondary containment required under 40 CFR 112.7 or 49 CFR 195.264 inland of the terminal manifold or loading arm, or, in the absence of secondary containment, to the valve or manifold adjacent to the bulk storage tank, including the entire pier or wharf to which a vessel transferring oil or hazardous materials is moored.

*MARPOL 73/78* means the International Convention for the Prevention of Pollution from Ships, 1973 (done at London, November 2, 1973) as modified by the Protocol of 1978 relating to the International Convention for the Prevention of Pollution from Ships, 1973 (done at London, February 17, 1978).

*Mobile facility* means any facility that can readily change location, such as a tank truck or tank car, other than a vessel or public vessel.

*Monitoring device* means any fixed or portable sensing device used to monitor for a discharge of oil or hazardous material onto the water, within or around a facility, and designed to notify operating personnel of a discharge of oil or hazardous material.

*Officer in Charge, Marine Inspection* (OCMI) means the U.S. Coast Guard officer commanding a Marine Inspection Zone described in part 3 of this chapter, or an authorized representative.

*Offshore facility* means any facility of any kind located in, on, or under, any of the navigable waters of the United States, and any facility of any kind which is subject to the jurisdiction of the United States and is located in, on, or under any other waters, other than a vessel or a public vessel.

*Oil* means oil of any kind or in any form, including but not limited to, petroleum, fuel oil, sludge, oil refuse, and oil mixed with wastes other than dredged spoil.

*Onshore facility* means any facility (including, but not limited to, motor vehicles and rolling stock) of any kind located in, on, or under any land within the United States other than submerged land.

*Person in charge* means an individual designated as a person in charge of transfer operations under § 154.710 (for facilities) or § 155.700 (for vessels) of this chapter.

*STCW* means the International Convention on Standards of Training, Certification, and Watchkeeping for Seafarers, 1978.

*Self-propelled tank vessel* means a self-propelled tank vessel other than a tankship.

*Tank barge* means a non-self-propelled tank vessel.

*Tankship* means a self-propelled tank vessel constructed or adapted primarily to carry oil or hazardous material in bulk in the cargo spaces.

*Tank vessel* means a vessel that is constructed or adapted to carry, or that carries, oil or hazardous material in bulk as cargo or cargo residue, and that—

(a) Is a vessel of the United States;

(b) Operates on the navigable waters of the United States; or

(c) Transfers oil or hazardous material in a port or place subject to the jurisdiction of the United States.

*Transfer* means any movement of oil or hazardous material to, from, or within a vessel by means of pumping, gravitation, or displacement. A transfer is considered to begin when the person in charge on the transferring vessel or facility and the person in charge on the receiving facility or vessel first meet to begin completing the declaration of inspection as required by § 156.150 of this chapter. A transfer is considered to be complete when all the connections for the transfer have been uncoupled and secured with blanks or other closure devices and both of the persons in charge have completed the declaration of inspection to include the date and time the transfer was complete.

*Vessel operator* means a person who owns, operates, or is responsible for the operation of a vessel.

[CGD 75–124, 45 FR 7169, Jan. 31, 1980, as amended by CGD 86–034, 55 FR 36252, Sept. 4, 1990; CGD 79–116, 60 FR 17141, Apr. 4, 1995; CGD 93–056, 61 FR 41458, Aug. 8, 1996; 62 FR 3610, Jan. 24, 1997; CGD 79–116, 62 FR 25125, May 8, 1997]

### § 154.106 Incorporation by reference: Where can I get a copy of the publications incorporated by reference in this part?

(a) Certain material is incorporated by reference (IBR) into this part with the approval of the Director of the Federal Register under 5 U.S.C. 552(a) and 1 CFR part 51. To enforce any edition other than that specified in this section, the Coast Guard must publish notice of change in the FEDERAL REGISTER and the material must be available to the public. All approved material is available for inspection at the National Archives and Records Administration (NARA). For information on the availability of this material at

NARA, call 202–741–6030 or go to *http://www.archives.gov/federal_register/code_of_federal_regulations/ibr_locations.html*. Also, it is available for inspection at the Coast Guard, Office of Port and Facility Activities, Cargo and Facilities Division (CG–5332), 2100 2nd St., SW., Stop 7363, Washington, DC 20593–7363, 202–372–2234 and is available from the sources indicated in this section below.

(b) American Petroleum Institute (API), 1220 L Street NW., Washington, DC 20037, 202–682–8000, *http://www.api.org/*:

(1) API Standard 2000, Venting Atmospheric and Low-Pressure Storage Tanks (Nonrefrigerated and Refrigerated), Third Edition, January 1982 (reaffirmed December 1987), IBR approved for § 154.814.

(2) API Recommended Practice 550, Manual on Installation of Refinery Instruments and Control Systems, Part II—Process Stream Analyzers, Section 1—Oxygen Analyzers, Fourth Edition, February 1985, IBR approved for § 154.824.

(c) American National Standards Institute (ANSI), 11 West 42nd Street, New York, NY 10036, 202–293–8020, *http://www.ansi.org*:

(1) ANSI B16.5, Steel Pipe Flanges and Flanged Fittings, 1988, IBR approved for §§ 154.500, 154.808, and 154.810.

(2) ANSI B16.24, Bronze Pipe Flanges and Flange Fittings Class 150 and 300, 1979, IBR approved for §§ 154.500 and 154.808.

(3) ANSI B31.3, Chemical Plant and Petroleum Refinery Piping, 1987 (including B31.3a–1988, B31.3b–1988, and B31.3c–1989 addenda), IBR approved for §§ 154.510 and 154.808.

(d) ASTM International, 100 Barr Harbor Drive, West Conshohocken, PA 19428–2959, 610–832–9585, *http://www.astm.org/*:

(1) ASTM F631–93, Standard Guide for Collecting Skimmer Performance Data in Controlled Environments, IBR approved for Appendix C.

(2) ASTM F715–95, Standard Test Methods for Coated Fabrics Used for Oil Spill Control and Storage, IBR approved for Appendix C.

(3) ASTM F722–82 (1993), Standard Specification for Welded Joints for Shipboard Piping Systems, IBR approved for Appendix A and Appendix B.

(4) ASTM F1122–87 (1992), Standard Specification for Quick Disconnect Couplings, IBR approved for § 154.500.

(5) ASTM F1155–98, Standard Practice for Selection and Application of Piping System Materials, IBR approved for Appendix A and Appendix B.

(6) ASTM F1413–07, Standard Guide for Oil Spill Dispersant Application Equipment: Boom and Nozzle Systems, IBR approved for § 154.1045.

(7) ASTM F1737–07, Standard Guide for Use of Oil Spill Dispersant Application Equipment During Spill Response: Boom and Nozzle Systems, IBR approved for § 154.1045.

(8) ASTM F1779–08, Standard Practice for Reporting Visual Observations of Oil on Water, IBR approved for § 154.1045.

(e) International Electrotechnical Commission (IEC), Bureau Central de la Commission Electrotechnique Internationale, 1 rue de Varembe, Geneva, Switzerland, +41–22–919–02–11, *http://www.iec.ch/*:

(1) IEC 309–1—Plugs, Socket-Outlets and Couplers for Industrial Purposes: Part 1, General Requirements, 1979, IBR approved for § 154.812.

(2) IEC 309–2—Plugs, Socket-Outlets and Couplers for Industrial Purposes: Part 2, Dimensional Interchangeability Requirements for Pin and Contact-tube Accessories, 1981, IBR approved for § 154.812.

(f) National Electrical Manufacturers Association (NEMA), 1300 North 17th Street, Suite 1752, Rosslyn, Virginia 22209, 703–841–3200, *http://www.nema.org/*:

(1) ANSI NEMA WD–6—Wiring Devices, Dimensional Requirements, 1988, IBR approved for § 154.812.

(2) [Reserved]

(g) National Fire Protection Association (NFPA), 1 Batterymarch Park, Quincy, MA 02269–9101, 617–770–3000, *http://www.nfpa.org/*:

(1) NFPA 51B, Standard for Fire Prevention in Use of Cutting and Welding Processes, 1994, IBR approved for § 154.735.

(2) NFPA 70, National Electrical Code, 2008, IBR approved for § 154.812.

(h) Oil Companies International Marine Forum (OCIMF), 29 Queen Anne's Gate, London, SW1H 9BU, England,

+44–0–20–7654–1200, *http://www.ocimf.com/*
:

(1) International Safety Guide for Oil Tankers and Terminals, Section 6.10, Fourth Ed., 1996, IBR approved for § 154.810.

(2) International Safety Guide for Oil Tankers and Terminals, Sections 9.1, 9.2, 9.3 and 9.5, Fourth Ed., 1996, IBR approved for § 154.735.

[USCG–2001–8661, 74 FR 45022, Aug. 31, 2009, as amended at USCG–2010–0351, 75 FR 36284, June 25, 2010]

### § 154.107 Alternatives.

(a) The COTP may consider and approve alternative procedures, methods, or equipment standards to be used by a facility operator in lieu of any requirement in this part if:

(1) Compliance with the requirement is economically or physically impractical;

(2) The alternative provides an equivalent level of safety and protection from pollution by oil or hazardous material, which is documented in the request; and

(3) The facility operator submits a written request for the alternative.

(b) The COTP takes final approval or disapproval action on the request, submitted in accordance with paragraph (a) of this section, in writing within 30 days of receipt of the request.

[CGD 75–124, 45 FR 7169, Jan. 31, 1980, as amended by CGD 86–034, 55 FR 36252, Sept. 4, 1990; CGD 93–056, 61 FR 41458, Aug. 8, 1996]

### § 154.108 Exemptions.

(a) The Assistant Commandant for Marine Safety, Security and Environmental Protection, acting for the Commandant, grants an exemption or partial exemption from compliance with any requirement in this part if:

(1) A facility operator submits an application for the exemption via the COTP; and

(2) It is determined, from the application, that:

(i) Compliance with the requirement is economically or physically impractical;

(ii) No alternative procedures, methods, or equipment standards exist that would provide an equivalent level of safety and protection from pollution by oil or hazardous material; and

(iii) The likelihood of oil or hazardous material being discharged is not substantially increased as a result of the exemption.

(b) If requested, the applicant must submit any appropriate information, including an environmental and economic assessment of the effects of and reasons for the exemption, and proposed procedures, methods or equipment standards.

(c) The exemption may specify the procedures, methods, or equipment standards that will apply.

(d) An exemption is granted or denied in writing. The decision of the Assistant Commandant for Marine Safety, Security and Environmental Protection is a final agency action.

[CGD 75–124, 45 FR 7169, Jan. 31, 1980, as amended by CGD 88–052, 53 FR 25122, July 1, 1988; CGD 86–034, 55 FR 36252, Sept. 4, 1990; 55 FR 49997, Dec. 4, 1990; CGD 96–026, 61 FR 33666, June 28, 1996; CGD 93–056, 61 FR 41458, Aug. 8, 1996; CGD 97–023, 62 FR 33364, June 19, 1997; USCG–2002–12471, 67 FR 41333, June 18, 2002]

### § 154.110 Letter of intent.

(a) The facility operator of any facility to which this part applies must submit a letter of intent to operate a facility or to conduct mobile facility operations to the COTP not less than 60 days before the intended operations unless a shorter period is allowed by the COTP. Previously submitted letters of intent need not be resubmitted.

(b) The letter of intent required by paragraph (a) of this section may be in any form but must contain:

(1) The names, addresses, and telephone numbers of the facility operator and the facility owner;

(2) The name, address, and telephone number of the facility or, in the case of a mobile facility, the dispatching office; and

(3) Except for a mobile facility, the geographical location of the facility in relation to the associated body of navigable waters.

(c) The facility operator of any facility for which a letter of intent has been submitted, shall within five (5) days advise the COTP in writing of any

changes of information and shall cancel, in writing, the letter for any facility at which transfer operations are no longer conducted.

[CGD 75–124, 45 FR 7169, Jan. 31, 1980, as amended by CGD 86–034, 55 FR 36252, Sept. 4, 1990; CGD 93–056, 61 FR 41458, Aug. 8, 1996]

### § 154.120 Facility examinations.

(a) The facility operator shall allow the Coast Guard, at any time, to make any examination and shall perform, upon request, any test to determine compliance with this part and part 156, as applicable. The facility operator shall conduct all required testing of facility equipment in a manner acceptable to the Coast Guard.

(b) The COTP shall provide the facility operator with a written report of the results of the examination for the record required by § 154.740(e) and shall list the deficiencies in the report when the facility is not in compliance with the requirements in this part and part 156 of this chapter.

[CGD 75–124, 45 FR 7169, Jan. 31, 1980]

### § 154.T150 Temporary suspension of requirements to permit support of deepwater horizon spill response.

(a) *Applicability*. This section applies to—

(1) Any facility described in § 154.100 of this part, that has contracted with any oil spill removal organization (OSRO), as defined in § 154.1020 of this part, if the OSRO's response resources, as defined in § 154.1020 of this part, are deployed in coordination with the On-Scene Coordinator (OSC), as defined in 40 CFR 300.5, in support of the response to the Deepwater Horizon Spill of National Significance; and

(2) Any facility described in § 154.100 of this part, that owns, operates, or has under its direct control, response resources, as defined in § 154.1020 of this part, deployed in coordination with the OSC, as described in 40 CFR 300.5, in support of the response to the Deepwater Horizon Spill of National Significance.

(b) *Suspension of certain response time requirements*. From June 30, 2010 through December 31, 2010, the stipulated response times, including the response times contained in any written contractual agreement with any OSRO, for the availability of response resources, as defined in § 154.1020 of this part, for a maximum most probable discharge and a worst case discharge are not necessary to meet the requirements of this part.

(c) *Other response time requirements still effective*. Any response time requirements for the availability of response resources, as defined in § 154.1020 of this part, for an average most probable discharge, as required by this part, remain in effect.

(d) *Armed Forces installation planning factors*. The Coast Guard authorizes the Armed Forces to revise Armed Forces installation response times to below that which is necessary to respond to an average most probable discharge at those installations that have deployed assets in support of the response to the Deepwater Horizon Spill of National Significance in response to a request from the OSC, as described in 40 CFR 300.5, for such assets.

EFFECTIVE DATE NOTE: By USCG–2010–0592, 75 FR 37719, June 30, 2010, temporary § 154.T150 was added, effective June 30, 2010 through Dec. 31, 2010.

## Subpart B—Operations Manual

### § 154.300 Operations manual: General.

(a) The facility operator of each facility to which this part applies shall submit, with the letter of intent, two copies of an Operations Manual that:

(1) Describes how the applicant meets the operating rules and equipment requirements prescribed by this part and part 156 of this chapter;

(2) Describes the responsibilities of personnel under this part and part 156 of this chapter in conducting transfer operations; and

(3) Includes translations into a language or languages understood by all designated persons in charge of transfer operations employed by the facility.

(b) The facility operator shall maintain the operations manual so that it is:

(1) Current; and

(2) Readily available for examination by the COTP.

(c) The COTP shall examine the Operations Manual when submitted, after

any substantial amendment, and as otherwise required by the COTP.

(d) In determining whether the manual meets the requirements of this part and part 156 of this chapter the COTP shall consider the size, complexity, and capability of the facility.

(e) If the manual meets the requirements of this part and part 156 of this chapter, the COTP will return one copy of the manual marked ''Examined by the Coast Guard'' as described in § 154.325.

(f) The facility operator shall ensure that a sufficient number of copies of the examined Operations Manual, including a sufficient number of the translations required by paragraph (a)(3) of this section, are readily available for each facility person in charge while conducting a transfer operation.

NOTE: The facility operator may request that the contents of the operations manual or portions thereof be considered commercial or financial information that is privileged or confidential. Under the Freedom of Information Act, the Coast Guard would withhold any part of the contents of the operations manual from public disclosure upon determining that it is commercial or financial information that is privileged or confidential.

[CGD 75–124, 45 FR 7169, Jan. 31, 1980, as amended by CGD 86–034, 55 FR 36253, Sept. 4, 1990; CGD 93–056, 61 FR 41458, Aug. 8, 1996]

### § 154.310 Operations manual: Contents.

(a) Each operations manual required by § 154.300 must contain:

(1) The geographic location of the facility;

(2) A physical description of the facility including a plan and/or plans, maps, drawings, aerial photographs or diagrams, showing the boundaries of the facility subject to Coast Guard jurisdiction, mooring areas, transfer locations, control stations, wharfs, the extent and scope of the piping subject to the tests required by § 156.170(c)(4) of this chapter, and the locations of safety equipment. For mobile facilities, a physical description of the facility;

(3) The hours of operation of the facility;

(4) The sizes, types, and number of vessels that the facility can transfer oil or hazardous material to or from simultaneously;

(5) For each product transferred at the facility:

(i) Generic or chemical name; and

(ii) The following cargo information:

(*a*) The name of the cargo as listed under appendix II of annex II of MARPOL 73/78, Table 30.25–1 of 46 CFR 30.25–1, Table 151.05 of 46 CFR 151.05–1, or Table 1 of 46 CFR part 153.

(*b*) A description of the appearance of the cargo;

(*c*) A description of the odor of the cargo;

(*d*) The hazards involved in handling the cargo;

(*e*) Instructions for safe handling of the cargo;

(*f*) The procedures to be followed if the cargo spills or leaks, or if a person is exposed to the cargo; and

(*g*) A list of fire fighting procedures and extinguishing agents effective with fires involving the cargo.

(6) The minimum number of persons on duty during transfer operations and their duties;

(7) The name and telephone number of the qualified individual identified under § 154.1026 of this part and the title and/or position and telephone number of the Coast Guard, State, local, and other personnel who may be called by the employees of the facility in an emergency;

(8) The duties of watchmen, required by § 155.810 of this chapter and 46 CFR 35.05–15, for unmanned vessels moored at the facility;

(9) A description of each communication system required by this part;

(10) The location and facilities of each personnel shelter, if any;

(11) A description and instructions for the use of drip and discharge collection and vessel slop reception facilities, if any;

(12) A description and the location of each emergency shutdown system;

(13) Quantity, types, locations, and instructions for use of monitoring devices if required by § 154.525;

(14) Quantity, type, location, instructions for use, and time limits for gaining access to the containment equipment required by § 154.545;

(15) Quantity, type, location, and instructions for use of fire extinguishing equipment required by § 154.735(d) of this part;

(16) The maximum allowable working pressure (MAWP) of each loading arm,

transfer pipe system, and hose assembly required to be tested by § 156.170 of this chapter, including the maximum relief valve setting (or maximum system pressure when relief valves are not provided) for each transfer system;

(17) Procedures for:

(i) Operating each loading arm including the limitations of each loading arm;

(ii) Transferring oil or hazardous material;

(iii) Completion of pumping; and

(iv) Emergencies;

(18) Procedures for reporting and initial containment of oil or hazardous material discharges;

(19) A brief summary of applicable Federal, state, and local oil or hazardous material pollution laws and regulations;

(20) Procedures for shielding portable lighting authorized by the COTP under § 154.570(c); and

(21) A description of the training and qualification program for persons in charge.

(22) Statements explaining that each hazardous materials transfer hose is marked with either the name of each product which may be transferred through the hose or with letters, numbers, symbols, color codes or other system acceptable to the COTP representing all such products and the location in the Operations Manual where a chart or list of symbols utilized is located and a list of the compatible products which may be transferred through the hose can be found for consultation before each transfer; and

(23) For facilities that conduct tank cleaning or stripping operations, a description of their procedures.

(b) lf a facility collects vapors emitted from vessel cargo tanks for recovery, destruction, or dispersion, the operations manual must contain a description of the vapor collection system at the facility which includes:

(1) A line diagram or simplified piping and instrumentation diagram (P&ID) of the facility's vapor control system piping, including the location of each valve, control device, pressure-vacuum relief valve, pressure indicator, flame arrester, and detonation arrester; and

(2) A description of the vapor control system's design and operation including the:

(i) Vapor line connection;

(ii) Startup and shutdown procedures;

(iii) Steady state operating procedures;

(iv) Provisions for dealing with pyrophoric sulfide (for facilities which handle inerted vapors of cargoes containing sulfur);

(v) Alarms and shutdown devices; and

(vi) Pre-transfer equipment inspection requirements.

(c) The facility operator shall incorporate a copy of each amendment to the operations manual under § 154.320 in each copy of the manual with the related existing requirement, or add the amendment at the end of each manual if not related to an existing requirement.

(d) The operations manual must be written in the order specified in paragraph (a) of this section, or contain a cross-referenced index page in that order.

(Approved by the Office of Management and Budget under control number 1625–0093)

[CGD 75–124, 45 FR 7171, Jan. 31, 1980, as amended by CGD 88–102, 55 FR 25428, June 21, 1990; CGD 86–034, 55 FR 36253, Sept. 4, 1990; CGD 92–027, 58 FR 39662, July 26, 1993; CGD 93–056, 61 FR 41459, Aug. 8, 1996; USCG–2006–25150, 71 FR 39209, July 12, 2006]

### § 154.320 Operations manual: Amendment.

(a) Using the following procedures, the COTP may require the facility operator to amend the operations manual if the COTP finds that the operations manual does not meet the requirements in this part:

(1) The COTP will notify the facility operator in writing of any inadequacies in the Operations Manual. The facility operator may submit written information, views, and arguments regarding the inadequacies identified, and proposals for amending the Manual, within 45 days from the date of the COTP notice. After considering all relevant material presented, the COTP shall notify the facility operator of any amendment required or adopted, or the COTP shall rescind the notice. The amendment becomes effective 60 days after

the facility operator receives the notice, unless the facility operator petitions the Commandant to review the COTP's notice, in which case its effective date is delayed pending a decision by the Commandant. Petitions to the Commandant must be submitted in writing via the COTP who issued the requirement to amend the Operations Manual.

(2) If the COTP finds that there is a condition requiring immediate action to prevent the discharge or risk of discharge of oil or hazardous material that makes the procedure in paragraph (a)(1) of this section impractical or contrary to the public interest, the COTP may issue an amendment effective on the date the facility operator receives notice of it. In such a case, the COTP shall include a brief statement of the reasons for the findings in the notice. The owner or operator may petition the Commandant to review the amendment, but the petition does not delay the amendment.

(b) The facility operator may propose amendments to the operations manual by:

(1) Submitting any proposed amendment and reasons for the amendment to the COTP not less than 30 days before the requested effective date of the proposed amendment; or

(2) If an immediate amendment is needed, requesting the COTP to approve the amendment immediately.

(c) The COTP shall respond to proposed amendments submitted under paragraph (b) of this section by:

(1) Approving or disapproving the proposed amendments;

(2) Advising the facility operator whether the request is approved, in writing, before the requested date of the amendments;

(3) Including any reasons in the written response if the request is disapproved; and

(4) If the request is made under paragraph (b)(2) of this section immediately approving or rejecting the request.

(d) Amendments to personnel and telephone number lists required by § 154.310(a)(7) of this part do not require examination by the COTP, but the COTP must be advised of such amendments as they occur.

[CGD 75–124, 45 FR 7171, Jan. 31, 1980, as amended by CGD 86–034, 55 FR 36253, Sept. 4, 1990; CGD 93–056, 61 FR 41459, Aug. 8, 1996]

### § 154.325 Operations manual: Procedures for examination.

(a) The operator of a facility shall submit two copies of the Operations Manual to the Captain of the Port of the zone in which the facility is located.

(b) Not less than 60 days prior to any transfer operation, the operator of a new facility shall submit, with the letter of intent, two copies of the Operations Manual to the Captain of the Port of the zone in which the facility is located.

(c) After a facility is removed from caretaker status, not less than 30 days prior to any transfer operation the operator of that facility shall submit two copies of the Operations Manual to the COTP of the zone in which the facility is located unless the manual has been previously examined and no changes have been made since the examination.

(d) If the COTP finds that the Operations Manual meets the requirements of this part and part 156 of this chapter, the COTP will return one copy of the manual to the operator marked ''Examined by the Coast Guard''.

(e) If the COTP finds that the Operations Manual does not meet the requirements of this part and/or part 156 of this chapter, the COTP will return the manuals with an explanation of why it does not meet the requirements of this chapter.

(f) No person may use any Operations Manual for transfer operations as required by this chapter unless the Operations Manual has been examined by the COTP.

(g) The Operations Manual is voided if the facility operator—

(1) Amends the Operations Manual without following the procedures in § 154.320 of this part;

(2) Fails to amend the Operations Manual when required by the COTP; or

(3) Notifies the COTP in writing that the facility will be placed in caretaker status.

[CGD 93–056, 61 FR 41459, Aug. 8, 1996]

## Subpart C—Equipment Requirements

### § 154.500 Hose assemblies.

Each hose assembly used for transferring oil or hazardous material must meet the following requirements:

(a) The minimum design burst pressure for each hose assembly must be at least four times the sum of the pressure of the relief valve setting (or four times the maximum pump pressure when no relief valve is installed) plus the static head pressure of the transfer system, at the point where the hose is installed.

(b) The maximum allowable working pressure (MAWP) for each hose assembly must be more than the sum of the pressure of the relief valve setting (or the maximum pump pressure when no relief valve is installed) plus the static head pressure of the transfer system, at the point where the hose is installed.

(c) Each nonmetallic hose must be usable for oil or hazardous material service.

(d) Each hose assembly must either have:

(1) Full threaded connections;

(2) Flanges that meet ANSI B16.5 or B16.24 (both incorporated by reference; *see* § 154.106); or

(3) Quick-disconnect couplings that meet ASTM F 1122 (incorporated by reference, see § 154.106).

(e) Each hose must be marked with one of the following:

(1) The name of each product for which the hose may be used; or

(2) For oil products, the words ''OIL SERVICE''; or

(3) For hazardous materials, the words ''HAZMAT SERVICE—SEE LIST'' followed immediately by a letter, number or other symbol that corresponds to a list or chart contained in the facility's operations manual or the vessel's transfer procedure documents which identifies the products that may be transferred through a hose bearing that symbol.

(f) Each hose also must be marked with the following, except that the information required by paragraphs (f)(2) and (3) of this section need not be marked on the hose if it is recorded in the hose records of the vessel or facility, and the hose is marked to identify it with that information:

(1) Maximum allowable working pressure;

(2) Date of manufacture; and

(3) Date of the latest test required by § 156.170.

(g) The hose burst pressure and the pressure used for the test required by § 156.170 of this chapter must not be marked on the hose and must be recorded elsewhere at the facility as described in paragraph (f) of this section.

(h) Each hose used to transfer fuel to a vessel that has a fill pipe for which containment can not practically be provided must be equipped with an automatic back pressure shutoff nozzle.

[CGD 75–124, 45 FR 7172, Jan. 31, 1980, as amended by CGD 86–034, 55 FR 36253, Sept. 4, 1990; CGD 88–032, 56 FR 35820, July 29, 1991; CGD 92–027, 58 FR 39662, July 26, 1993; CGD 93–056, 61 FR 41459, Aug. 8, 1996; USCG–2000–7223, 65 FR 40057, June 29, 2000; USCG–2001–8661, 74 FR 45022, Aug. 31, 2009]

### § 154.510 Loading arms.

(a) Each mechanical loading arm used for transferring oil or hazardous material and placed into service after June 30, 1973, must meet the design, fabrication, material, inspection, and testing requirements in ANSI B31.3 (incorporated by reference; *see* § 154.106).

(b) The manufacturer's certification that the standard in paragraph (a) of this section has been met must be permanently marked on the loading arm or recorded elsewhere at the facility with the loading arm marked to identify it with that information.

(c) Each mechanical loading arm used for transferring oil or hazardous material must have a means of being drained or closed before being disconnected after transfer operations are completed.

[CGD 75–124, 45 FR 7172, Jan. 31, 1980, as amended by CGD 86–034, 55 FR 36253, Sept. 4, 1990; USCG–2001–8661, 74 FR 45022, Aug. 31, 2009]

### § 154.520 Closure devices.

(a) Except as provided in paragraph (b) of this section, each facility to which this part applies must have enough butterfly valves, wafer-type resilient seated valves, blank flanges, or

other means acceptable to the COTP to blank off the ends of each hose or loading arm that is not connected for the transfer of oil or hazardous material. Such hoses and/or loading arms must be blanked off during the transfer of oil or hazardous material. A suitable material in the joints and couplings shall be installed on each end of the hose assembly or loading arm not being used for transfer to ensure a leak-free seal.

(b) A new, unused hose, and a hose that has been cleaned and is gas free, is exempt from the requirements of paragraph (a) of this section.

[CGD 93–056, 61 FR 41459, Aug. 8, 1996]

### § 154.525 Monitoring devices.

The COTP may require the facility to install monitoring devices if the installation of monitoring devices at the facility would significantly limit the size of a discharge of oil or hazardous material and either:

(a) The environmental sensitivity of the area requires added protection;

(b) The products transferred at the facility pose a significant threat to the environment; or

(c) The size or complexity of the transfer operation poses a significant potential for a discharge of oil or hazardous material.

[CGD 75–124, 45 FR 7172, Jan. 31, 1980, as amended by CGD 86–034, 55 FR 36253, Sept. 4, 1990]

### § 154.530 Small discharge containment.

(a) Except as provided in paragraphs (c), (d), and (e) of this section, each facility to which this part applies must have fixed catchments, curbing, or other fixed means to contain oil or hazardous material discharged in at least—

(1) Each hose handling and loading arm area (that area on the facility that is within the area traversed by the free end of the hose or loading arm when moved from its normal stowed or idle position into a position for connection);

(2) Each hose connection manifold area; and

(3) Under each hose connection that will be coupled or uncoupled as part of the transfer operation during coupling, uncoupling, and transfer.

(b) The discharge containment means required by paragraph (a) of this section must have a capacity of at least:

(1) Two barrels if it serves one or more hoses of 6-inch inside diameter or smaller, or loading arms of 6-inch nominal pipe size diameter or smaller;

(2) Three barrels if it serves one or more hoses with an inside diameter of more than 6-inches, but less than 12 inches, or loading arms with a nominal pipe size diameter of more than 6 inches, but less than 12 inches; or

(3) Four barrels if it serves one or more hoses of 12-inch inside diameter or larger, or loading arms of 12-inch nominal pipe size diameter or larger.

(c) The facility may use portable means of not less than ½ barrel capacity each to meet the requirements of paragraph (a) of this section for part or all of the facility if the COTP finds that fixed means to contain oil or hazardous material discharges are not feasible.

(d) A mobile facility may have portable means of not less than five gallons capacity to meet the requirements of paragraph (a) of this section.

(e) Fixed or portable containment may be used to meet the requirements of paragraph (a)(3) of this section.

[CGD 75–124, 45 FR 7172, Jan. 31, 1980, as amended by CGD 86–034, 55 FR 36253, Sept. 4, 1990; CGD 93–056, 61 FR 41460, Aug. 8, 1996]

### § 154.540 Discharge removal.

Each facility to which this part applies must have a means to safely remove discharged oil or hazardous material, within one hour of completion of the transfer, from the containment required by § 154.530 of this part without discharging the oil or hazardous material into the water.

[CGD 93–056, 61 FR 41460, Aug. 8, 1996]

### § 154.545 Discharge containment equipment.

(a) Each facility must have ready access to enough containment material and equipment to contain any oil or hazardous material discharged on the water from operations at that facility.

(b) For the purpose of this section, ''access'' may be by direct ownership, joint ownership, cooperative venture, or contractual agreement.

(c) Each facility must establish time limits, subject to approval by the COTP, for deployment of the containment material and equipment required by paragraph (a) of this section considering:

(1) Oil or hazardous material handling rates;

(2) Oil or hazardous material capacity susceptible to being spilled;

(3) Frequency of facility operations;

(4) Tidal and current conditions;

(5) Facility age and configuration; and

(6) Past record of discharges.

(d) The COTP may require a facility to surround each vessel conducting an oil or hazardous material transfer operation with containment material before commencing a transfer operation if—

(1) The environmental sensitivity of the area requires the added protection;

(2) The products transferred at the facility pose a significant threat to the environment;

(3) The past record of discharges at the facility is poor; or

(4) The size or complexity of the transfer operation poses a significant potential for a discharge of oil or hazardous material; and

(5) The use of vessel containment provides the only practical means to reduce the extent of environmental damage.

(e) Equipment and procedures maintained to satisfy the provisions of this chapter may be utilized in the planning requirements of subpart F and subpart H of this part.

[CGD 75–124, 45 FR 7172, Jan. 31, 1980, as amended by CGD 86–034, 55 FR 36253, Sept. 4, 1990; CGD 93–056, 61 FR 41460, Aug. 8, 1996; USCG–1999–5149, 65 FR 40825, June 30, 2000]

### § 154.550 Emergency shutdown.

(a) The facility must have an emergency means to enable the person in charge of the transfer on board the vessel, at that person's usual operating station, to stop the flow of oil or hazardous material from the facility to the vessel. The means must be—

(1) An electrical, pneumatic, or mechanical linkage to the facility; or

(2) An electronic voice communications system continuously operated by a person on the facility who can stop the flow of oil or hazardous material immediately.

(b) The point in the transfer system at which the emergency means stops the flow of oil or hazardous material on the facility must be located near the dock manifold connection to minimize the loss of oil or hazardous material in the event of the rupture or failure of the hose, loading arm, or manifold valve.

(c) For oil transfers, the means used to stop the flow under paragraph (a) of this section must stop that flow within—

(1) 60 seconds on any facility or portion of a facility that first transferred oil on or before November 1, 1980; and

(2) 30 seconds on any facility that first transfers oil after November 1, 1980.

(d) For hazardous material transfers, the means used to stop the flow under paragraph (a) of this section must stop that flow within—

(1) 60 seconds on any facility or portion of a facility that first transferred hazardous material before October 4, 1990; and

(2) 30 seconds on any facility that first transfers hazardous material on or after October 4, 1990.

[CGD 86–034, 55 FR 36253, Sept. 4, 1990]

### § 154.560 Communications.

(a) Each facility must have a means that enables continuous two-way voice communication between the person in charge of the vessel transfer operation and the person in charge of the facility transfer operation.

(b) Each facility must have a means, which may be the communications system itself, that enables a person on board a vessel or on the facility to effectively indicate the desire to use the means of communication required by paragraph (a) of this section.

(c) The means required by paragraph (a) of this section must be usable and effective in all phases of the transfer operation and all conditions of weather at the facility.

(d) A facility may use the system in § 154.550(a)(2) to meet the requirement of paragraph (a) of this section.

(e) Portable radio devices used to comply with paragraph (a) of this section during the transfer of flammable

or combustible liquids must be marked as intrinsically safe by the manufacturer of the device and certified as intrinsically safe by a national testing laboratory or other certification organization approved by the Commandant as defined in 46 CFR 111.105–11. As an alternative to the marking requirement, facility operators may maintain documentation at the facility certifying that the portable radio devices in use at the facility are in compliance with this section.

[CGD 75–124, 45 FR 7172, Jan. 31, 1980; 45 FR 43705, June 30, 1980, as amended by CGD 93–056, 61 FR 41460, Aug. 8, 1996]

### § 154.570 Lighting.

(a) Except as provided in paragraph (c) of this section, for operations between sunset and sunrise, a facility must have fixed lighting that adequately illuminates:

(1) Each transfer connection point on the facility;

(2) Each transfer connection point in use on any barge moored at the facility to or from which oil or hazardous material is being transferred;

(3) Each transfer operations work area on the facility; and

(4) Each transfer operation work area on any barge moored at the facility to or from which oil or hazardous material is being transferred.

(b) Where the illumination is apparently inadequate, the COTP may require verification by instrument of the levels of illumination. On a horizontal plane 3 feet above the barge deck or walking surface, illumination must measure at least:

(1) 5.0 foot candles at transfer connection points; and

(2) 1.0 foot candle in transfer operations work areas.

(c) For small or remote facilities, the COTP may authorize operations with an adequate level of illumination provided by the vessel or by portable means.

(d) Lighting must be located or shielded so as not to mislead or otherwise interfere with navigation on the adjacent waterways.

[CGD 75–124, 45 FR 7172, Jan. 31, 1980, as amended by CGD 86–034, 55 FR 36253, Sept. 4, 1990]

## Subpart D—Facility Operations

### § 154.700 General.

No person may operate a facility unless the equipment, personnel, and operating procedures of that facility meet the requirements of this part.

[CGD 75–124, 45 FR 7173, Jan. 31, 1980]

### § 154.710 Persons in charge: Designation and qualification.

No person may serve, and the facility operator may not use the services of a person, as person in charge of facility transfer operations unless:

(a) The facility operator has designated that person as a person in charge;

(b) The person has had at least 48 hours of experience in transfer operations at a facility in operations to which this part applies. The person also has enough experience at the facility for which qualification is desired to enable the facility operator to determine that the person's experience is adequate;

(c) The person has completed a training and qualification program established by the facility operator and described in the Operations Manual in accordance with § 154.310(a)(21), that provides the person with the knowledge and training necessary to properly operate the transfer equipment at the facility, perform the duties described in paragraph (d) of this section, follow the procedures required by this part, and fulfill the duties required of a person in charge during an emergency, except that the COTP may approve alternative experience and training requirements for new facilities; and

(d) The facility operator must certify that each person in charge has the knowledge of, and skills necessary to—

(1) The hazards of each product to be transferred;

(2) The rules in this part and in part 156 of this chapter;

(3) The facility operating procedures as described in the operations manual;

(4) Vessel transfer systems, in general;

(5) Vessel transfer control systems, in general;

(6) Each facility transfer control system to be used;

(7) Follow local discharge reporting procedures; and

(8) Carry out the facility's response plan for discharge reporting and containment.

(e) Training conducted to comply with the hazard communication programs required by the Occupational Safety and Health Administration (OSHA) of the Department of Labor (DOL) (29 CFR 1910.1200) or the Environmental Protection Agency (EPA) (40 CFR 311.1), or to meet the requirements of subpart F of this part may be used to satisfy the requirements in paragraphs (c) and (d) of this section, as long as the training addresses the requirements in paragraphs (c) and (d) of this section.

(Sec. 311(j)(1)(C) of the Federal Water Pollution Control Act (86 Stat. 816, 868); 33 U.S.C. 1161(j)(1)(C); EO 11548, 3 CFR, 1966–1970 Comp., p. 949; 49 CFR 1.46(m))

[CGD 71–160R, 37 FR 28253, Dec. 21, 1972, as amended by CGD 86–034, 55 FR 36253, Sept. 4, 1990; CGD 93–056, 61 FR 41460, Aug. 8, 1996]

### § 154.730 Persons in charge: Evidence of designation.

Each person in charge shall carry evidence of his designation as a person in charge when he is engaged in transfer operations unless such evidence is immediately available at the facility.

(Sec. 311(j)(1)(C) of the Federal Water Pollution Control Act (86 Stat. 816, 868); 33 U.S.C. 1161(j)(1)(C); EO 11548, 3 CFR, 1966–1970 Comp., p. 949; 49 CFR 1.46(m))

[CGD 71–160R, 37 FR 28253, Dec. 21, 1972]

### § 154.735 Safety requirements.

Each operator of a facility to which this part applies shall ensure that the following safety requirements are met at the facility:

(a) Access to the facility by firefighting personnel, fire trucks, or other emergency personnel is not impeded.

(b) Materials which are classified as hazardous under 49 CFR parts 170 through 179 are kept only in the quantities needed for the operation or maintenance of the facility and are stored in storage compartments.

(c) Gasoline or other fuel is not stored on a pier, wharf, or other similar structure.

(d) A sufficient number of fire extinguishers approved by an independent laboratory listed in 46 CFR 162.028–5 for fighting small, localized fires are in place throughout the facility and maintained in a ready condition.

(e) The location of each hydrant, standpipe, hose station, fire extinguisher, and fire alarm box is conspicuously marked and readily accessible.

(f) Each piece of protective equipment is ready to operate.

(g) Signs indicating that smoking is prohibited are posted in areas where smoking is not permitted.

(h) Trucks and other motor vehicles are operated or parked only in designated locations.

(i) All rubbish is kept in receptacles.

(j) All equipment with internal combustion engines used on the facility—

(1) Does not constitute a fire hazard; and

(2) Has a fire extinguisher attached that is approved by an independent laboratory listed in 46 CFR 162.028–5, unless such a fire extinguisher is readily accessible nearby on the facility.

(k) Spark arresters are provided on chimneys or appliances which—

(1) Use solid fuel; or

(2) Are located where sparks constitute a hazard to nearby combustible material.

(l) All welding or hot work conducted on or at the facility is the responsibility of the facility operator. The COTP may require that the operator of the facility notify the COTP before any welding or hot work operations are conducted. Any welding or hot work operations conducted on or at the facility must be conducted in accordance with NFPA 51B (incorporated by reference; *see* § 154.106). The facility operator shall ensure that the following additional conditions or criteria are met:

(1) Welding or hot work is prohibited during gas freeing operations, within 30.5 meters (100 feet) of bulk cargo operations involving flammable or combustible materials, within 30.5 meters (100 feet) of fueling operations, or within 30.5 meters (100 feet) of explosives or 15.25 meters (50 feet) of other hazardous materials.

(2) If the welding or hot work is on the boundary of a compartment (*i.e.*, bulkhead, wall or deck) an additional fire watch shall be stationed in the adjoining compartment.

(3) Personnel on fire watch shall have no other duties except to watch for the presence of fire and to prevent the development of hazardous conditions.

(4) Flammable vapors, liquids or solids must first be completely removed from any container, pipe or transfer line subject to welding or hot work.

(5) Tanks used for storage of flammable or combustible substances must be tested and certified gas free prior to starting hot work.

(6) Proper safety precautions in relation to purging, inserting, or venting shall be followed for hot work on containers;

(7) All local laws and ordinances shall be observed;

(8) In case of fire or other hazard, all cutting, welding or other hot work equipment shall be completely secured.

(m) Heating equipment has sufficient clearance to prevent unsafe heating of nearby combustible material.

(n) Automotive equipment having an internal combustion engine is not refueled on a pier, wharf, or other similar structure.

(o) There are no open fires or open flame lamps.

(p) Electric wiring and equipment is maintained in a safe condition so as to prevent fires.

(q) Electrical wiring and electrical equipment installed after October 4, 1990, meet NFPA 70.

(r) Electrical equipment, fittings, and devices installed after October 4, 1990, show approval for that use by—

(1) Underwriters Laboratories;

(2) Factory Mutual Research Corporation; or

(3) Canadian Standards Association.

(s) Tank cleaning or gas freeing operations conducted by the facility on vessels carrying oil residues or mixtures shall be conducted in accordance with sections 9.1, 9.2, 9.3, and 9.5 of the OCIMF International Safety Guide for Oil Tankers and Terminals (ISGOTT) (incorporated by reference; *see* § 154.106), except that—

(1) Prohibitions in ISGOTT against the use of recirculated wash water do not apply if the wash water is first processed to remove product residues;

(2) The provision in ISGOTT section 9.2.10 concerning flushing the bottom of tanks after every discharge of leaded gasoline does not apply;

(3) The provision in ISGOTT section 9.2.11 concerning that removal of sludge, scale, and sediment does not apply if personnel use breathing apparatus which protect them from the tank atmosphere; and

(4) Upon the request of the facility owner or operator in accordance with § 154.107, the COTP may approve the use of alternative standards to ISGOTT if the COTP determines that the alternative standards provide an equal level of protection to the ISGOTT standards.

(t) Guards are stationed, or equivalent controls acceptable to the COTP are used to detect fires, report emergency conditions, and ensure that access to the marine transfer area is limited to—

(1) Personnel who work at the facility including persons assigned for transfer operations, vessel personnel, and delivery and service personnel in the course of their business;

(2) Coast Guard personnel;

(3) Other Federal, State, or local governmental officials; and

(4) Other persons authorized by the operator.

(u) Smoking shall be prohibited at the facility except that facility owners or operators may authorize smoking in designated areas if—

(1) Smoking areas are designated in accordance with local ordinances and regulations;

(2) Signs are conspicuously posted marking such authorized smoking areas; and

(3) ''No Smoking'' signs are conspicuously posted elsewhere on the facility.

(v) Warning signs shall be displayed on the facility at each shoreside entry to the dock or berth, without obstruction, at all times for fixed facilities and for mobile facilities during coupling, transfer operation, and uncoupling. The warning signs shall conform to 46 CFR 151.45–2(e)(1) or 46 CFR 153.955.

[CGD 86–034, 55 FR 36253, Sept. 4, 1990, as amended by CGD 93–056, 61 FR 41460, Aug. 8, 1996; USCG–2001–8661, 74 FR 45022, Aug. 31, 2009]

### § 154.740 Records.

Each facility operator shall maintain at the facility and make available for examination by the COTP:

(a) A copy of the letter of intent for the facility;

(b) The name of each person designated as a person in charge of transfer operations at the facility and certification that each person in charge has completed the training requirements of § 154.710 of this part;

(c) The date and result of the most recent test or examination of each item tested or examined under § 156.170 of this chapter;

(d) The hose information required by § 154.500 (e) and (g) except that marked on the hose;

(e) The record of all examinations of the facility by the COTP within the last 3 years;

(f) The Declaration of Inspection required by § 156.150(f) of this chapter;

(g) A record of all repairs made within the last three years involving any component of the facility's vapor control system required by subpart E of this part;

(h) A record of all automatic shut downs of the facility's vapor control system within the last 3 years; and

(i) Plans, calculations, and specifications of the facility's vapor control system certified under § 154.804 of this part.

(j) If they are not marked as such, documentation that the portable radio devices in use at the facility under § 154.560 of this part are intrinsically safe.

(Approved by the Office of Management and Budget under control number 1625–0060)

[CGD 75–124, 45 FR 7173, Jan. 31, 1980, as amended by CGD 88–102, 55 FR 25429, June 21, 1990; CGD 86–034, 55 FR 36254, Sept. 4, 1990; CGD 93–056, 61 FR 41461, Aug. 8, 1996; USCG–2006–25150, 71 FR 39209, July 12, 2006]

### § 154.750 Compliance with operations manual.

The facility operator shall require facility personnel to use the procedures in the operations manual prescribed by § 154.300 for operations under this part.

[CGD 75–124, 45 FR 7174, Jan. 31, 1980]

## Subpart E—Vapor Control Systems

SOURCE: CGD 88–102, 55 FR 25429, June 21, 1990, unless otherwise noted.

### § 154.800 Applicability.

(a) Except as specified by paragraph (c) of this section, this subpart applies to:

(1) Each facility which collects vapors of crude oil, gasoline blends, or benzene emitted from vessel cargo tanks;

(2) A vessel which is not a tank vessel that has a vapor processing unit located on board for recovery, destruction, or dispersion of crude oil, gasoline blends, or benzene vapors from a tank vessel; and

(3) Certifying entities which review, inspect, test, and certify facility vapor control systems.

(b) A facility which collects vapors of flammable or combustible cargoes other than crude oil, gasoline blends, or benzene, must meet the requirements prescribed by the Commandant (CG–522).

(c) A facility with an existing Coast Guard approved vapor control system which was operating prior to July 23, 1990 is subject only to § 154.850 of this subpart as long as it receives cargo vapor only from the specific vessels for which it was approved.

(d) This subpart does not apply to the collection of vapors of liquefied flammable gases as defined in 46 CFR 30.10–39.

(e) When a facility vapor control system which receives cargo vapor from a vessel is connected to a facility vapor control system that serves tank storage areas and other refinery processes, the specific requirements of this subpart apply between the vessel vapor connection and the point where the vapor control system connects to the facility's main vapor control system.

[CGD 88–102, 55 FR 25429, June 21, 1990, as amended by CGD 96–026, 61 FR 33666, June 28, 1996; USCG–2010–0351, 75 FR 36284, June 25, 2010]

### § 154.802 Definitions.

As used in this subpart:

*Certifying entity* means an individual or organization accepted by the Commandant (CG–522) to review plans and

calculations for vapor control system designs, and to conduct initial inspections and witness tests of vapor control system installations.

*Existing vapor control system* means a vapor control system which was operating prior to July 23, 1990.

*Facility vapor connection* means the point in a facility's vapor collection system where it connects to a vapor collection hose or the base of a vapor collection arm.

*Inerted* means the oxygen content of the vapor space in a tank vessel's cargo tank is reduced to 8 percent by volume or less in accordance with the inert gas requirements of 46 CFR 32.53 or 46 CFR 153.500.

*Liquid knockout vessel* means a device to separate liquid from vapor.

*Maximum allowable transfer rate* means the maximum volumetric rate at which a vessel may receive cargo or ballast.

*New vapor control system* means a vapor control system which is not an existing vapor control system.

*Vapor balancing* means the transfer of vapor displaced by incoming cargo from the tank of a vessel receiving cargo into a tank of the vessel or facility delivering cargo via a vapor collection system.

*Vapor collection system* means an arrangement of piping and hoses used to collect vapor emitted from a vessel's cargo tanks and transport the vapor to a vapor processing unit.

*Vapor control system* means an arrangement of piping and equipment used to control vapor emissions collected from a vessel, and includes the vapor collection system and the vapor processing unit.

*Vapor destruction unit* means a vapor processing unit that destroys cargo vapor by a means such as incineration.

*Vapor dispersion system* means a vapor processing unit which releases cargo vapor to the atmosphere through a venting system not located on the vessel being loaded or ballasted.

*Vapor processing unit* means the components of a vapor control system that recovers, destroys, or disperses vapor collected from a vessel.

*Vapor recovery unit* means a vapor processing unit that recovers cargo vapor by a non-destructive means such as lean oil absorbtion, carbon bed adsorption, or refrigeration.

*Vessel vapor connection* means the point in a vessel's fixed vapor collection system where it connects to a vapor collection hose or arm.

[CGD 88–102, 55 FR 25429, June 21, 1990, as amended by CGD 96–026, 61 FR 33666, June 28, 1996; USCG–2010–0351, 75 FR 36284, June 25, 2010]

### § 154.804 Review, certification, and initial inspection.

(a) A new vapor control system installation must be certified by a certifying entity as meeting the requirements of this subpart prior to operating.

(b) [Reserved]

(c) An existing vapor control system installation that has been Coast Guard approved for operation with specific vessels must be certified by a certifying entity prior to receiving vapors from other vessels.

(d) Plans and information submitted to the certifying entity must include a qualitative failure analysis. The analysis must demonstrate the following:

(1) The vapor control system is designed to permit the system to continuously operate safely when receiving cargo vapors from tankships and barges over the full range of transfer rates expected at the facility;

(2) The vapor control system is provided with the proper alarms and automatic control systems to prevent unsafe operation;

(3) The vapor control system is equipped with sufficient automatic or passive devices to minimize damage to personnel, property, and the environment if an accident were to occur; and

(4) If a quantitative failure analysis is also conducted, the level of safety attained is at least one order of magnitude greater than that calculated for operating without a vapor control system.

NOTE: The *American Institute of Chemical Engineers* publication, ''Guidelines for Hazard Evaluation Procedures'' may be used as guidance when preparing a qualitative failure analysis. Military Standard MIL-STD-882B may be used as guidance when preparing a quantitative failure analysis.

(e) The certifying entity must conduct all initial inspections and witness

all tests required to demonstrate that the facility:

(1) Conforms to certified plans and specifications;

(2) Meets the requirements of this subpart; and

(3) Is operating properly.

(f) Upon receipt of written certification from the certifying entity that a facility's vapor control system complies with the requirements of this part the COTP shall endorse the letter of adequacy required by § 154.325 of this part to indicate that the facility is acceptable for collecting vapors of crude oil, gasoline blends, benzene, or any other vapors for which it is certified.

(g) Any design or configuration alteration involving a certified vapor control system must be reviewed by a certifying entity. After conducting any inspections and witnessing tests necessary to verify that the modified vapor control system meets the requirements of this subpart, the certifying entity must recertify the installation.

(h) Certifications issued in accordance with this section and a copy of the plans, calculations, and specifications for the vapor control system must be maintained at the facility.

(i) A certifying entity accepted under § 154.806 of this subpart may not certify a facility vapor control system if it was involved in the design or installation of the system.

(Approved by the Office of Management and Budget under control number 1625–0060)

[CGD 88–102, 55 FR 25429, June 21, 1990, as amended by USCG–1998–3799, 63 FR 35531, June 30, 1998; USCG–2006–25150, 71 FR 39209, July 12, 2006]

### § 154.806 Application for acceptance as a certifying entity.

(a) An individual or organization seeking acceptance as a certifying entity must apply in writing to the Commandant (Stop 7363, Washington, DC 20593–7363). Each application must be signed and certified to be correct by the applicant or, if the applicant is an organization, by an authorized officer or official representative of the organization, and must include a letter of intent from a facility owner or operator to use the services of the individual or organization to certify a vapor control system installation. Any false statement or misrepresentation, or the knowing and willful concealment of a material fact may subject the applicant to prosecution under the provisions of 18 U.S.C. 1001, and denial or termination of acceptance as a certifying entity.

(b) The applicant must possess the following minimum qualifications, and be able to demonstrate these qualifications to the satisfaction of the Commandant (Stop 7363, Washington, DC 20593–7363):

(1) The ability to review and evaluate design drawings and failure analyses;

(2) A knowledge of the applicable regulations of this subpart, including the standards incorporated by reference in these regulations;

(3) The ability to monitor and evaluate test procedures and results;

(4) The ability to perform inspections and witness tests of bulk liquid cargo handling systems;

(5) That it is not controlled by an owner or operator of a vessel or facility engaged in controlling vapor emissions; and

(6) That it is not dependent upon Coast Guard acceptance under this section to remain in business.

(c) Each application for acceptance must contain the following:

(1) The name and address of the applicant, including subsidiaries and divisions if applicable;

(2) A statement that the applicant is not controlled by an owner or operator of a vessel or facility engaged in controlling vapor emissions, or a full disclosure of any ownership or controlling interest held by such owners or operators;

(3) A description of the experience and qualifications of the person(s) who would be reviewing or testing the systems;

(4) A statement that the person(s) who would be reviewing or testing the systems is/are familiar with the regulations in this subpart; and

(5) A statement that the Coast Guard may verify the information submitted in the application and may examine the person(s) who would be reviewing or testing the systems to determine their qualifications.

(d) The acceptance of a certifying entity may be terminated by the Commandant (Stop 7363, Washington, DC 20593–7363) if the entity fails to properly review, inspect, or test a system in accordance with this subpart.

NOTE: A list of entities accepted to certify facility vapor control system installations is available from the Commandant (Stop 7363, Washington, DC 20593–7363).

(Approved by the Office of Management and Budget under control number 1625–0060)

[CGD 88–102, 55 FR 25429, June 21, 1990, as amended by CGD 96–026, 61 FR 33666, June 28, 1996; USCG–2006–25150, 71 FR 39210, July 12, 2006; USCG–2010–0351, 75 FR 36284, June 25, 2010]

### § 154.808 Vapor control system, general.

(a) A vapor control system design and installation must eliminate potential overfill hazards, overpressure and vacuum hazards, and sources of ignition to the maximum practical extent. Each remaining hazard source which is not eliminated must be specifically addressed in the protection system design and operational requirements.

(b) Vapor collection system piping and fittings must be in accordance with ANSI B31.3 (incorporated by reference; see § 154.106) and designed for a maximum allowable working pressure of at least 150 psig. Valves and flanges must be in accordance with ANSI B16.5 or B16.24 (both incorporated by reference; see § 154.106), 150 pound class.

(c) All electrical equipment used in a vapor control system must comply with NFPA 70.

(d) Any pressure, flow, or concentration indication required by this part must provide a remote indicator on the facility where the cargo transfer and vapor control systems are controlled.

(e) Any alarm condition specified in this part must activate an audible and visible alarm where the cargo transfer and vapor control systems are controlled.

(f) The vapor control system must be separated or insulated from external heat sources to limit vapor control system piping surface temperature to not more than 177 °C. (350 °F.) during normal operation.

(g) A means must be provided to eliminate any liquid condensate from the vapor collection system which carries over from the vessel or condenses as a result of an enrichment process.

(h) If a liquid knockout vessel is installed it must have:

(1) A means to indicate the level of liquid in the device;

(2) A high liquid level sensor that activates an alarm; and

(3) A high high level sensor that closes the remotely operated cargo vapor shutoff valve required by § 154.810(a) of this subpart and shuts down any compressors or blowers prior to liquid carrying over from the vessel to the compressor or blower.

(i) Vapor collection piping must be electrically grounded and electrically continuous.

(j) If the facility handles inerted vapors of cargoes containing sulfur, provisions must be made to control heating from pyrophoric iron sulfide deposits in the vapor collection line.

[CGD 88–102, 55 FR 25429, June 21, 1990, as amended by USCG–2001–8661, 74 FR 45023, Aug. 31, 2009]

### § 154.810 Vapor line connections.

(a) A remotely operated cargo vapor shutoff valve must be installed in the vapor collection line between the facility vapor connection and the nearest point where any inerting, enriching, or diluting gas is introduced into the vapor collection line or where a detonation arrester is fitted. The valve must:

(1) Close within thirty (30) seconds after detection of a shutdown condition by a component required by this subpart;

(2) Close automatically if the control signal is lost;

(3) Activate an alarm when a signal to shut down is received;

(4) Be capable of manual operation or manual activation;

(5) Have a local valve position indicator or be designed so that the valve position can be readily determined from the valve handle or valve stem position; and

(6) If the valve seat is fitted with resilient material, not allow appreciable leakage when the resilient material is damaged or destroyed.

(b) Except when a vapor collection arm is used, the last 1.0 meter (3.3 feet)

of vapor piping before the facility vapor connection must be:

(1) Painted red/yellow/red with:

(i) The red bands 0.1 meter (0.33 feet) wide, and

(ii) The middle yellow band 0.8 meter (2.64 feet) wide; and

(2) Labeled ''VAPOR'' in black letters at least 50 millimeters (2 inches) high.

(c) Each facility vapor connection flange must have a permanently attached 0.5 inch diameter stud at least 1.0 inch long projecting outward from the flange face. The stud must be located at the top of the flange, midway between bolt holes, and in line with the bolt hole pattern.

(d) Each hose used for transferring vapors must:

(1) Have a design burst pressure of at least 25 psig;

(2) Have a maximum allowable working pressure of at least 5 psig;

(3) Be capable of withstanding at least 2.0 psi vacuum without collapsing or constricting;

(4) Be electrically continuous with a maximum resistance of ten thousand (10,000) ohms;

(5) Have flanges with:

(i) A bolt hole arrangement complying with the requirements for 150 pound class ANSI B16.5 (incorporated by reference; *see* § 154.106) flanges, and

(ii) One or more 0.625 inch diameter holes in the flange located midway between bolt holes and in line with the bolt hole pattern;

(6) Be abrasion resistant and resistant to kinking; and

(7) Have the last 1.0 meter (3.3 feet) of each end of the vapor hose marked in accordance with paragraph (b) of this section.

(e) Vapor hose handling equipment must be provided with hose saddles which provide adequate support to prevent kinking or collapse of hoses.

(f) Fixed vapor collection arms must:

(1) Meet the requirements of paragraphs (d)(1) through (d)(5) of this section;

(2) Have the last 1.0 meter (3.3 feet) of the arm marked in accordance with paragraph (b) of this section.

(g) The facility vapor connection must be electrically insulated from the vessel vapor connection in accordance with section 6.10 of the OCIMF International Safety Guide for Oil Tankers and Terminals (incorporated by reference; see § 154.106).

(h) A vapor collection system fitted with an enriching system that operates at a positive gauge pressure at the facility vapor connection must be fitted with:

(1) A manual isolation valve between each facility vapor connection and the remotely operated cargo vapor shutoff valve required by paragraph (a) of this section; and

(2) A means to prevent backflow of enriched vapor to the vessel's vapor collection system.

[CGD 88–102, 55 FR 25429, June 21, 1990, as amended by USCG–2001–8661, 74 FR 45023, Aug. 31, 2009]

### § 154.812 Facility requirements for vessel liquid overfill protection.

(a) Each facility which receives cargo vapor from a tank barge which is fitted with overfill protection in accordance with 46 CFR 39.20–9(a) as its only means of overfill protection must provide a 120 volt, 20 amp explosion proof receptacle which meets:

(1) ANSI/NEMA WD6 (incorporated by reference; see § 154.106);

(2) NFPA 70, National Electrical Code, Articles 410–57 and 501–12; incorporated by reference; *see* § 154.106); and

(3) 46 CFR 111.105–9.

(b) Each facility that receives cargo vapor from a tank barge fitted with an intrinsically safe cargo tank level sensor system complying with 46 CFR 39.20–9(b) as its only means of overfill protection must have an overfill control panel on the dock capable of powering and receiving an alarm and shutdown signal from the cargo tank level sensor system that:

(1) Closes the remotely operated cargo vapor shutoff valve required by § 154.810(a) of this subpart and activates the emergency shutdown system required by § 154.550 of this part when:

(i) A tank overfill signal is received from the barge, or

(ii) Electrical continuity of the cargo tank level sensor system is lost;

(2) Activates an alarm which is audible and visible to barge personnel and facility personnel when a tank overfill signal, or an optional high level signal corresponding to a liquid level lower

than the tank overfill sensor setting, is received from the barge;

(3) Has a means to electrically and mechanically test the alarms and automatic shutdown systems prior to transferring cargo to or ballasting the tank barge;

(4) Has suitable means, such as approved intrinsic safety barriers able to accept passive devices, to ensure that the overfill and optional alarm circuits on the barge side of the overfill control panel, including cabling, normally closed switches, and pin and sleeve connectors, are intrinsically safe;

(5) Is labeled with the maximum allowable inductance and capacitance to be connected to the panel, as specified by the equipment manufacturer; and

(6) Has a female connecting plug for the tank barge level sensor system with a 5 wire, 16 amp connector body meeting IEC 309–1/309–2 (incorporated by reference; *see* § 154.106) which is:

(i) Configured with pins S2 and R1 for the tank overfill sensor circuit, pin G connected to the cabling shield, and pins N and T3 reserved for an optional high level alarm connection;

(ii) Labeled ''Connector for Barge Overflow Control System''; and

(iii) Connected to the overfill control panel by a shielded flexible cable.

[CGD 88–102, 55 FR 25429, June 21, 1990, as amended by USCG–2001–8661, 74 FR 45023, Aug. 31, 2009]

### § 154.814 Facility requirements for vessel vapor overpressure and vacuum protection.

(a) A facility's vapor collection system must have the capacity for collecting cargo vapor at a rate of not less than 1.25 times the facility's maximum liquid transfer rate for cargo for which vapor collection is required plus any inerting, diluting, or enriching gas which may be added to the system, unless the vapor growth for turbulent loading of the most volatile liquid handled by the facility is less than 25 percent.

(b) A facility vapor collection system must maintain the pressure in a vessel's cargo tanks between 80 percent of the highest setting of any of the vessel's vacuum relief valves and 80 percent of the lowest setting of any of the vessel's pressure relief valves for a non-inerted tank vessel, and between 0.2 psig and 80 percent of the lowest setting of any of the vessel's pressure relief valves for an inerted tank vessel. The system must be capable of maintaining the pressure in the vessel's cargo tanks within this range at any cargo transfer rate less than or equal to the maximum transfer rate determined at the pre-transfer conference required by § 156.120(w) of this chapter.

(c) The pressure measured at the facility vapor connection must be corrected for pressure drops across the vessel's vapor collection system and the vapor collection hose or arm.

(d) A pressure sensing device must be provided which activates an alarm when the pressure at the facility vapor connection exceeds either the pressure corresponding to the upper pressure determined in paragraph (b) of this section or a lower pressure agreed upon at the pre-transfer conference required by § 156.120(w) of this chapter.

(e) A pressure sensing device must be provided which activates an alarm when the pressure at the facility vapor connection falls below either the pressure corresponding to the lower pressure determined in paragraph (b) of this section or a higher pressure agreed upon at the pre-transfer conference required by § 156.120(w) of this chapter.

(f) A pressure sensing device must be provided which activates the emergency shutdown system required by § 154.550 of this part and closes the remotely operated cargo vapor shutoff valve required by § 154.810(a) of this subpart when the pressure at the facility vapor connection exceeds 2.0 psi, or a lower pressure agreed upon at the pre-transfer conference required by § 156.120(w) of this chapter. The sensing device must be independent of the device used to activate the alarm required by paragraph (d) of this section.

(g) A pressure sensing device must be provided which closes the remotely operated cargo vapor shutoff valve required by § 154.810(a) of this subpart when the vacuum at the facility vapor connection is more than 1.0 psi, or a lesser vacuum set at the pre-transfer conference required by § 156.120(w) of this chapter. The sensing device must be independent of the device used to

activate the alarm required by paragraph (e) of this section.

(h) The pressure sensing devices required by paragraphs (d) and (f) of this section must be located in the vapor collection line between the facility vapor connection and the manual isolation valve, if required by § 154.810(h) of this subpart, unless an interlock is provided which prevents operation of the system when the isolation valve is closed.

(i) A pressure indicating device must be provided which indicates the pressure in the vapor collection line.

(j) If a compressor, blower, or eductor capable of drawing more than 1.0 psi vacuum is used to draw vapor from the vessel, a vacuum relief valve must be installed in the vapor collection line between the compressor, blower, or eductor and the facility vapor connection, which:

(1) Relieves at a pressure such that the pressure in the vapor collection system at the facility vapor connection does not exceed 1.0 psi vacuum;

(2) Has a relieving capacity equal to or greater than the capacity of the compressor, blower, or eductor;

(3) Has a flame screen fitted at the vacuum relief opening; and

(4) Has been tested for relieving capacity in accordance with paragraph 1.5.1.3 of API 2000 (incorporated by reference; *see* § 154.106) with a flame screen fitted.

(k) When a facility collects cargo vapor through an undersea pipeline from a vessel moored offshore, the vacuum relief valve may be set at a vacuum greater than 1.0 psi vacuum provided the pressure controls take into account the pressure drop across the vessel's vapor collection system, any vapor collection hoses, and the undersea pipeline as a function of the actual transfer rate.

(l) If the pressure in the vapor collection system can exceed 2.0 psig due to a malfunction in an inerting, enriching, or diluting system a pressure relief valve must:

(1) Be installed between the point where inerting, enriching, or diluting gas is introduced into the vapor collection system and the facility vapor connection;

(2) Relieve at a pressure such that the pressure in the vapor collection system at the facility vapor connection does not exceed 2.0 psig;

(3) Have a relieving capacity equal to or greater than the maximum capacity of the facility inerting, enriching, or diluting gas source;

(4) If not designed to insure a minimum vapor discharge velocity of 30 meters (98.4 ft.) per second, have a flame screen fitted at the discharge opening; and

(5) Have been tested for relieving capacity in accordance with paragraph 1.5.1.3 of API 2000.

(m) The relieving capacity test required by paragraph (l)(5) must be carried out with a flame screen fitted at the discharge opening if the pressure relief valve is not designed to insure a minimum vapor discharge velocity of 30 meters (98.4 ft.) per second.

[CGD 88–102, 55 FR 25429, June 21, 1990, as amended by USCG–1998–3799, 63 FR 35531, June 30, 1998; USCG–2001–8661, 74 FR 45023, Aug. 31, 2009]

### § 154.820 Fire, explosion, and detonation protection.

(a) A vapor control system with a single facility vapor connection that receives vapor only from a vessel with inerted cargo tanks and processes vapor with a vapor recovery unit must:

(1) Be capable of inerting the vapor collection line in accordance with § 154.824(a) of this subpart prior to receiving vapors from the vessel;

(2) Have at least one oxygen analyzer that samples the vapor concentration continuously at a point not more than 6 meters (19.7 ft.) from the facility vapor connection; and

(3) Meet § 154.824 (f)(1), (f)(2), (g), (h)(2), and (h)(3) of this subpart.

(b) A vapor control system with a single facility vapor connection that receives vapor only from a vessel with inerted cargo tanks and processes vapor with a vapor destruction unit must:

(1) Have a detonation arrester located not more than 6 meters (19.7 ft.) from the facility vapor connection; or

(2) Have an inerting system that meets the requirements of § 154.824 of this subpart.

(c) A vapor control system with a single facility vapor connection that receives vapor from a vessel with cargo tanks that are not inerted and processes vapor with a vapor recovery unit must:

(1) Have a detonation arrester located not more than 6 meters (19.7 ft.) from the facility vapor connection; or

(2) Have an inerting, enriching, or diluting system that meets the requirements of § 154.824 of this subpart.

(d) A vapor control system with a single facility vapor connection that receives vapor from a vessel with cargo tanks that are not inerted and processes the vapor with a vapor destruction unit must:

(1) Have a detonation arrester located not more than 6 meters (19.7 ft.) from the facility vapor connection; and

(2) Have an inerting, enriching, or diluting system that meets the requirements of § 154.824 of this subpart.

(e) A vapor control system with multiple facility vapor connections that processes vapor with a vapor recovery unit must have a detonation arrester located not more than 6 meters (19.7 ft.) from each facility vapor connection.

(f) A vapor control system with multiple facility vapor connections that processes vapor with a vapor destruction unit must:

(1) Have a detonation arrester located not more than 6 meters (19.7 ft.) from each facility vapor connection; and

(2) Have an inerting, enriching, or diluting system that meets the requirements of § 154.824 of this subpart.

(g) A vapor control system that uses a vapor balancing system in which cargo vapor from a vessel is transferred through the facility vapor collection system to facility storage tanks must:

(1) Have a detonation arrester located not more than 6 meters (19.7 ft.) from each facility vapor connection;

(2) Have a detonation arrester located within the storage tank containment area as close as practical to the vapor return connection of each facility storage tank; and

(3) Have facility storage tank high level alarm systems and facility storage tank overfill control systems arranged to prevent cargo from entering the vapor return line.

(h) Except for a discharge vent from a vapor destruction unit, each outlet of a vapor control system that vents to atmosphere and is not isolated with a pressure-vacuum relief valve must have a flame arrester located at the outlet.

### § 154.822 Detonation arresters, flame arresters, and flame screens.

(a) Each detonation arrester required by this part must:

(1) Be capable of arresting a detonation from either side of the device; and

(2) Be acceptable to the Commandant (CG–522). A detonation arrester designed, built, and tested in accordance with appendix A of this part will be acceptable to the Commandant (G-MSO).

(b) Each flame arrester required by this part must be acceptable to the Commandant (CG–522). A flame arrester designed, built, and tested in accordance with appendix B of this part will be acceptable to the Commandant (G-MSO).

(c) Each flame screen required by this part must be either a single screen of corrosion resistant wire of at least 30 by 30 mesh, or two screens, both of corrosion resistant wire, of at least 20 by 20 mesh, spaced not less than 12.7 millimeters (½ in.) or more than 38.1 millimeters (1½ in.) apart.

[CGD 88–102, 55 FR 25429, June 21, 1990; 55 FR 39270, Sept. 26, 1990, as amended by CGD 96–026, 61 FR 33666, June 28, 1996; USCG–2002–12471, 67 FR 41333, June 18, 2002; USCG–2010–0351, 75 FR 36284, June 25, 2010]

### § 154.824 Inerting, enriching, and diluting systems.

(a) A vapor control system which uses inerting, enriching, or diluting gas must be capable of inerting, enriching, or diluting the vapor collection line prior to receiving cargo vapor.

(b) Except as permitted by § 154.820(a) of this subpart, a vapor control system which uses an inerting, enriching, or diluting system must be equipped with a gas injection and mixing arrangement located as close as practical but not more than 10 meters (32.8 ft.) from the facility vapor connection that ensures complete mixing of the gases

within 20 pipe diameters of the injection point;

(c) A vapor control system that uses an inerting or enriching system may not be operated at a vacuum after the injection point unless:

(1) There are no sleeve-type pipe couplings, vacuum relief valves, or other devices which could allow air into the vapor collection system downstream of the injection point; or

(2) An additional analyzer is used to monitor the downstream vapor concentration and a means is provided to inject additional inerting or enriching gas.

(d) A vapor control system that uses analyzers to control the amount of inerting, enriching, or diluting gas injected into the vapor collection line must be equipped with at least 2 analyzers. The analyzers must be connected so that:

(1) When oxygen analyzers are used, the higher oxygen concentration reading controls the inerting or enriching system and activates the alarm and automatic shutdown system required by paragraph (h), (j) or (k)(2) of this section;

(2) When hydrocarbon analyzers are used, the lower hydrocarbon concentration reading controls the enriching system and activates the alarm and automatic shutdown system required by paragraph (i) or (k)(1) of this section; and

(3) When hydrocarbon analyzers are used, the higher hydrocarbon concentration reading controls the diluting system and activates the alarm and automatic shutdown system required by paragraph (l) of this section.

(e) A vapor control system that uses volumetric measurements to control the amount of inerting, enriching, or diluting gas injected into the vapor collection line must be equipped with at least one analyzer to activate the alarms and automatic shutdown systems required by this section.

(f) Each oxygen or hydrocarbon analyzer required by this section must:

(1) Be installed in accordance with API Recommended Practice 550 (incorporated by reference; *see* § 154.106);

(2) Have a response time of not more than 30 seconds from the time the vapor is sampled; and

(3) Sample the vapor concentration continuously not more than 30 pipe diameters from the gas injection point.

(g) Oxygen analyzers which operate at elevated temperatures (*i.e.*, zirconia oxide or thermomagnetic) must not be used.

(h) An inerting system must:

(1) Supply sufficient inert gas to the vapor stream to ensure that the oxygen concentration throughout the vapor collection system is maintained below 8.0 percent by volume;

(2) Activate an alarm when the oxygen concentration in the vapor collection line exceeds 8.0 percent by volume;

(3) Close the remotely operated cargo vapor shutoff valve required by § 154.810(a) of this part when the oxygen concentration in the vapor collection line exceeds 9.0 percent by volume; and

(4) If a combustion device is used to produce the inert gas, have a hydraulic seal and non-return valve between the combustion device and the vapor collection line.

(i) An enriching system must:

(1) Supply sufficient compatible hydrocarbon vapor to the vapor stream to ensure that the hydrocarbon concentration throughout the vapor collection system is maintained above 170 percent by volume of the upper flammable limit;

(2) Activate an alarm when the hydrocarbon concentration in the vapor collection line falls below 170 percent by volume of the upper flammable limit; and

(3) Close the remotely operated cargo vapor shutoff valve required by § 154.810(a) of this subpart when the hydrocarbon concentration in the vapor collection line falls below 150 percent by volume of the upper flammable limit.

(j) Oxygen analyzers may be used in lieu of hydrocarbon analyzers in an enriching system at a facility that receives cargo vapor only from a vessel with non-inerted cargo tanks, provided that the analyzers:

(1) Activate an alarm when the oxygen concentration in the vapor collection line exceeds 15.5 percent by volume; and

(2) Close the remotely operated cargo vapor shutoff valve required by

§ 154.810(a) of this subpart when the oxygen concentration in the vapor collection line exceeds 16.5 percent by volume.

(k) An enriching system may be used in a vapor collection system that receives cargo vapor from a vessel with inerted cargo tanks if:

(1) Hydrocarbon analyzers are used to comply with paragraph (i)(2) and (i)(3) of this section; or

(2) If oxygen analyzers are used, the analyzers activate an alarm when the oxygen concentration in the vapor collection line exceeds 8 percent by volume, and close the remotely operated cargo vapor shutoff valve required by § 154.810(a) of this subpart when the oxygen concentration exceeds 9 percent by volume.

(l) An air dilution system must:

(1) Supply sufficient additional air to the vapor stream to ensure that the hydrocarbon concentration throughout the vapor collection system is maintained below 30 percent by volume of the lower flammable limit;

(2) Activate an alarm when the hydrocarbon concentration in the vapor collection line exceeds 30 percent by volume of the lower flammable limit; and

(3) Close the remotely operated cargo vapor shutoff valve required by § 154.810(a) of this subpart when the hydrocarbon concentration in the vapor collection line exceeds 50 percent by volume of the lower flammable limit.

[CGD 88–102, 55 FR 25429, June 21, 1990; 55 FR 39270, Sept. 26, 1990, as amended by USCG–2001–8661, 74 FR 45023, Aug. 31, 2009]

### § 154.826 Vapor compressors and blowers.

(a) Each inlet and outlet to a compressor or blower which handles vapor that has not been inerted, enriched, or diluted in accordance with § 154.824 of this subpart must be fitted with:

(1) A detonation arrester;

(2) A flame arrester; or

(3) An explosion suppression system acceptable to the Commandant (CG–522).

(b) If a reciprocating or screw-type compressor handles vapor in the vapor collection system, it must be provided with indicators and audible and visible alarms to warn against the following conditions:

(1) Excessive discharge gas temperature at each compressor chamber or cylinder;

(2) Excessive cooling water temperature;

(3) Excessive vibration;

(4) Low lube oil level;

(5) Low lube oil pressure; and

(6) Excessive shaft bearing temperatures.

(c) If a liquid ring-type compressor handles vapor in the vapor collection system, it must be provided with indicators and audible and visible alarms to warn against the following conditions:

(1) Low level of liquid sealing medium;

(2) Lack of flow of liquid sealing medium;

(3) Excessive temperature of the liquid sealing medium;

(4) Low lube oil level;

(5) Low lube oil pressure, if pressurized lubricating system; and

(6) Excessive shaft bearing temperature.

(d) If a centrifugal compressor, fan, or lobe blower handles vapor in the vapor collection system, construction of the blades and/or housing must meet one of the following:

(1) Blades or housing of nonmetallic construction;

(2) Blades and housing of nonferrous material;

(3) Blades and housing of corrosion resistant steel;

(4) Ferrous blades and housing with one-half inch or more design tip clearance; or

(5) Blades of aluminum or magnesium alloy and a ferrous housing with a nonferrous insert sleeve at the periphery of the impeller.

[CGD 88–102, 55 FR 25429, June 21, 1990, as amended by CGD 96–026, 61 FR 33666, June 28, 1996; USCG–2010–0351, 75 FR 36284, June 25, 2010]

### § 154.828 Vapor recovery and vapor destruction units.

(a) The inlet to a vapor recovery unit which receives cargo vapor that has not been inerted, enriched, or diluted

in accordance with § 154.824 of this subpart must be fitted with one of the following:

(1) A detonation arrester;

(2) A flame arrester; or

(3) An explosion suppression system acceptable to the Commandant (CG–522).

(b) The inlet to a vapor destruction unit must:

(1) Have a liquid seal; and

(2) Have two quick-closing stop valves installed in the vapor line.

(c) A vapor destruction unit must:

(1) Not be within 30 meters (98.8 ft.) of any tank vessel berth or mooring at the facility;

(2) Have a flame arrester or detonation arrester fitted in the vapor line; and

(3) Alarm and shut down when a flame is detected on the flame arrester or detonation arrester.

(d) When a vapor destruction unit shuts down or has a flame-out condition the vapor destruction unit control system must:

(1) Close the quick-closing stop valves required by paragraph (b)(2) of this section; and

(2) Close the remotely operated cargo vapor shutoff valve required by § 154.810(a) of this subpart.

[CGD 88–102, 55 FR 25429, June 21, 1990, as amended by CGD 96–026, 61 FR 33666, June 28, 1996; USCG–2010–0351, 75 FR 36284, June 25, 2010]

### § 154.840 Personnel training.

(a) A person in charge of a transfer operation utilizing a vapor control system must have completed a training program covering the particular system installed at the facility. Training must include drills or demonstrations using the installed vapor control system covering normal operations and emergency procedures.

(b) The training program required by paragraph (a) of this section must cover the following subjects:

(1) Purpose of a vapor control system;

(2) Principles of the vapor control system;

(3) Components of the vapor control system;

(4) Hazards associated with the vapor control system;

(5) Coast Guard regulations in this subpart;

(6) Operating procedures, including:

(i) Testing and inspection requirements,

(ii) Pre-transfer procedures,

(iii) Connection sequence,

(iv) Start-up procedures, and

(v) Normal operations; and

(7) Emergency procedures.

### § 154.850 Operational requirements.

(a) A facility must receive vapors only from a vessel which has its certificate of inspection or certificate of compliance endorsed in accordance with 46 CFR 39.10–13(e).

(b) The following must be performed not more than 24 hours prior to each transfer operation:

(1) All alarms and automatic shutdown systems required by this part must be tested; and

(2) The analyzers required by § 154.820(a), § 154.824 (d) and (e) of this subpart must be checked for calibration by use of a span gas.

(c) The position of all valves in the vapor line between the vessel's tanks and the facility vapor collection system must be verified prior to the start of the transfer operation.

(d) A tank barge overfill control system that meets the requirements of 46 CFR 39.20–9(b) must not be connected to an overfill sensor circuit that exceeds the system's rated cable length, inductance, and capacitance.

(e) When vapor is being received from a vessel with inerted cargo tanks, the remotely operated cargo vapor shutoff valve required by § 154.810(a) of this subpart must not be opened until the pressure at the facility vapor connection exceeds the pressure on the downstream side of the remotely operated cargo vapor shutoff valve.

(f) The initial cargo transfer rate must not exceed the rate agreed upon at the pre-transfer conference required by § 156.120(w) of this chapter and 46 CFR 39.30–1(h).

(g) The cargo transfer rate must not exceed the maximum allowable transfer rate as determined by the lesser of the following:

(1) A transfer rate corresponding to the maximum vapor processing rate for the vapor control system, as specified

in the facility operations manual required by § 154.300 of this chapter; or

(2) The vessel's maximum transfer rate determined in accordance with 46 CFR 39.30–1(d).

(h) While transferring cargo to a vessel connected to a vapor control system, compressed air or gas may be used to clear cargo hoses and loading arms, but must not be used to clear cargo lines.

(i) If one of the two analyzers required by § 154.824(d) of this subpart becomes inoperable during a transfer operation, the operation may continue provided the remaining analyzer remains operational; however, no further transfer operations may be started until the inoperable analyzer is replaced or repaired.

(j) Whenever a condition results in a shutdown of the vapor control system, the person in charge shall immediately terminate cargo loading.

(k) If it is suspected that a flare in the vapor control system has had a flare-back, or if a flame is detected on the flame arrester required by § 154.828(c)(2) of this subpart, the transfer operation must be stopped and not be restarted until the flame arrester has been inspected and found to be in satisfactory condition.

## Subpart F—Response Plans for Oil Facilities

SOURCE: CGD 91–036, 61 FR 7917, Feb. 29, 1996, unless otherwise noted.

### § 154.1010 Purpose.

This subpart establishes oil spill response plan requirements for all marine transportation-related (MTR) facilities (hereafter also referred to as facilities) that could reasonably be expected to cause substantial harm or significant and substantial harm to the environment by discharing oil into or on the navigable waters, adjoining shorelines, or exclusive economic zone. The development of a response plan prepares the facility owner or operator to respond to an oil spill. These requirements specify criteria to be used during the planning process to determine the appropriate response resources. The specific criteria for response resources and their arrival times are not performance standards. The criteria are based on a set of assumptions that may not exist during an actual oil spill incident.

### § 154.1015 Applicability.

(a) This subpart applies to all MTR facilities that because of their location could reasonably be expected to cause at least substantial harm to the environment by discharging oil into or on the navigable waters, adjoining shorelines, or exclusive economic zone.

(b) The following MTR facilities that handle, store, or transport oil, in bulk, could reasonably be expected to cause substantial harm to the environment by discharging oil into or on the navigable waters or adjoining shorelines and are classified as substantial harm MTR facilities:

(1) Fixed MTR onshore facilities capable of transferring oil to or from a vessel with a capacity of 250 barrels or more and deepwater ports;

(2) Mobile MTR facilities used or intended to be used to transfer oil to or from a vessel with a capacity of 250 barrels or more; and

(3) Those MTR facilities specifically designated as substantial harm facilities by the COTP under § 154.1016.

(c) The following MTR facilities that handle, store, or transport oil in bulk could not only reasonably be expected to cause substantial harm, but also significant and substantial harm, to the environment by discharging oil into or on the navigable waters, adjoining shorelines, or exclusive economic zone and are classified as significant and substantial harm MTR facilities:

(1) Deepwater ports, and fixed MTR onshore facilities capable of transferring oil to or from a vessel with a capacity of 250 barrels or more except for facilities that are part of a non-transportation-related fixed onshore facility with a storage capacity of less than 42,000 gallons; and

(2) Those MTR facilities specifically designated as significant and substantial harm facilities by the COTP under § 154.1016.

(d) An MTR facility owner or operator who believes the facility is improperly classified may request review and reclassification in accordance with § 154.1075.

**§ 154.1016 Facility classification by COTP.**

(a) The COTP may upgrade the classification of:

(1) An MTR facility not specified in § 154.1015 (b) or (c) to a facility that could reasonably be expected to cause substantial harm to the environment; or

(2) An MTR facility specified in § 154.1015(b) to a facility that could reasonably be expected to cause significant and substantial harm to the environment.

(b) The COTP may downgrade, the classification of:

(1) An MTR facility specified in § 154.1015(c) to a facility that could reasonably be expected to cause substantial harm to the environment; or

(2) An MTR facility specified in § 154.1015(b) to a facility that could not reasonably be expected to cause substantial, or significant and substantial harm to the environment.

(3) The COTP will consider downgrading an MTR facility's classification only upon receiving a written request for a downgrade of classification from the facility's owner or operator.

(c) When changing a facility classification the COTP may, as appropriate, consider all relevant factors including, but not limited to: Type and quantity of oils handled in bulk; facility spill history; age of facility; proximity to public and commercial water supply intakes; proximity to navigable waters based on the definition of navigable waters in 33 CFR 2.36; and proximity to fish and wildlife and sensitive environments.

[CGD 91–036, 61 FR 7917, Feb. 29, 1996, as amended by USCG–2008–0179, 73 FR 35014, June 19, 2008]

**§ 154.1017 Response plan submission requirements.**

(a) The owner or operator of an MTR facility identified only in § 154.1015(b), or designated by the COTP as a substantial harm facility, shall prepare and submit to the cognizant COTP a response plan that meets the requirements of §§ 154.1030, 154.1040, 154.1045, or § 154.1047, as appropriate. This applies to:

(1) A mobile MTR facility used or intended to be used to transfer oil to or from a vessel with a capacity of 250 barrels or more; and

(2) A fixed MTR facility specifically designated as a substantial harm facility by the COTP under § 154.1016.

(b) The owner or operator of an MTR facility identified in § 154.1015(c) or designated by the COTP as a significant and substantial harm facility shall prepare and submit for review and approval of the cognizant COTP a response plan that meets the requirements of §§ 154.1030, 154.1035, 154.1045, or 154.1047, as appropriate. This applies to:

(1) A fixed MTR facility capable of transferring oil, in bulk, to or from a vessel with a capacity of 250 barrels or more; and

(2) An MTR facility specifically designated as a significant and substantial harm facility by the COTP under § 154.1016.

(c) In addition to the requirements in paragraphs (a) and (b) of this section, the response plan for a mobile MTR facility must meet the requirements of § 154.1041 subpart F.

**§ 154.1020 Definitions.**

Except as otherwise defined in this section, the definition in 33 CFR 154.105 apply to this subpart and subparts H and I.

*Adverse weather* means the weather conditions that will be considered when identifying response systems and equipment in a response plan for the applicable operating environment. Factors to consider include, but are not limited to, significant wave height as specified in §§ 154.1045, 154.1047, 154.1225, or 154.1325, as appropriate; ice conditions, temperatures, weather-related visibility, and currents within the COTP zone in which the systems or equipment are intended to function.

*Animal fat* means a non-petroleum oil, fat, or grease derived from animals, and not specifically identified elsewhere in this part.

*Average most probable discharge* means a discharge of the lesser of 50 barrels or 1 percent of the volume of the worst case discharge.

*Captain of the Port (COTP) Zone* means a zone specified in 33 CFR part 3 and, where applicable, the seaward extension of that zone to the outer

boundary of the exclusive economic zone (EEZ).

*Complex* means a facility possessing a combination of marine-transportation related and non-transportation-related components that is subject to the jurisdiction of more than one Federal agency under section 311(j) of the Clean Water Act.

*Dispersant-application platform* means the vessel or aircraft outfitted with the dispersant-application equipment acting as the delivery system for the dispersant onto the oil spill.

*Dispersant Mission Planner 2* or (DMP2) means an Internet-downloadable application that estimates EDAC for different dispersant response systems. The NSFCC will use DPMP2 for evaluating OSRO dispersant classification levels.

*Effective Daily Application Capacity* or *EDAC* means the estimated amount of dispersant that can be applied to a discharge by an application system given the availability of supporting dispersant stockpiles, when operated in accordance with approved standards and within acceptable environmental conditions.

*Exclusive economic zone* (EEZ) means the zone contiguous to the territorial sea of the United States extending to a distance up to 200 nautical miles from the baseline from which the breadth of the territorial sea is measured.

*Facility that could reasonably be expected to cause significant and substantial harm* means any MTR facility (including piping and any structures that are used for the transfer of oil between a vessel and a facility) classified as a ''significant and substantial harm'' facility under § 154.1015(c) and § 154.1216.

*Facility that could reasonably be expected to cause substantial harm* means any MTR facility classified as a ''substantial harm'' facility under § 154.1015(b) and § 154.1216.

*Fish and Wildlife and Sensitive Environment* means areas that may be identified by either their legal designation or by Area Committees in the applicable Area Contingency Plan (ACP) (for planning) or by members of the Federal On-Scene Coordinator's spill response structure (during responses). These areas may include: Wetlands, national and state parks, critical habitats for endangered or threatened species, wilderness and natural resource areas, marine sanctuaries and estuarine reserves, conservation areas, preserves, wildlife areas, wildlife refuges, wild and scenic rivers, areas of economic importance, recreational areas, national forests, Federal and state lands that are research areas, heritage program areas, land trust areas, and historical and archaeological sites and parks. These areas may also include unique habitats such as: aquaculture sites and agricultural surface water intakes, bird nesting areas, critical biological resource areas, designated migratory routes, and designated seasonal habitats.

*Great Lakes* means Lakes Superior, Michigan, Huron, Erie, and Ontario, their connecting and tributary waters, the Saint Lawrence River as far as Saint Regis, and adjacent port areas.

*Gulf Coast* means, for the purposes of dispersant-application requirements, the region encompassing the following Captain of the Port Zones:

(1) Corpus Christi, TX.
(2) Houston/Galveston, TX.
(3) Port Arthur, TX.
(4) Morgan City, LA.
(5) New Orleans, LA.
(6) Mobile, AL.
(7) St. Petersburg, FL.

*Higher volume port area* means the following ports:

(1) Boston, MA.
(2) New York, NY.
(3) Delaware Bay and River to Philadelphia, PA.
(4) St. Croix, VI.
(5) Pascagoula, MS.
(6) Mississippi River from Southwest Pass, LA. to Baton Rouge, LA.
(7) Louisiana Offshore Oil Port (LOOP), LA.
(8) Lake Charles, LA.
(9) Sabine-Neches River, TX.
(10) Galveston Bay and Houston Ship Channel, TX.
(11) Corpus Christi, TX.
(12) Los Angeles/Long Beach harbor, CA.
(13) San Francisco Bay, San Pablo Bay, Carquinez Strait, and Suisun Bay to Antioch, CA.
(14) Straits of Juan De Fuca from Port Angeles, WA, to and including Puget Sound, WA.

(15) Prince William Sound, AK.

*Inland area* means the area shoreward of the boundary lines defined in 46 CFR part 7, except in the Gulf of Mexico. In the Gulf of Mexico, it means the area shoreward of the lines of demarcation (COLREG lines) defined in §§ 80.740 through 80.850 of this chapter. The inland area does not include the Great Lakes.

*Marine transportation-related facility* (MTR facility) means any onshore facility or segment of a complex regulated under section 311(j) of the Federal Water Pollution Control Act (FWPCA) by two or more Federal agencies, including piping and any structure used or intended to be used to transfer oil to or from a vessel, subject to regulation under this part and any deepwater port subject to regulation under part 150 of this chapter. For a facility or segment of a complex regulated by two or more Federal agencies under section 311(j) of the FWPCA, the MTR portion of the complex extends from the facility oil transfer system's connection with the vessel to the first valve inside the secondary containment surrounding tanks in the non-transportation-related portion of the facility or, in the absence of secondary containment, to the valve or manifold adjacent to the tanks comprising the non-transportation-related portion of the facility, unless another location has otherwise been agreed to by the COTP and the appropriate Federal official.

*Maximum extent practicable* means the planned capability to respond to a worst case discharge in adverse weather, as contained in a response plan that meets the criteria in this subpart or in a specific plan approved by the cognizant COTP.

*Maximum most probable discharge* means a discharge of the lesser of 1,200 barrels or 10 percent of the volume of a worst case discharge.

*Nearshore area* means the area extending seaward 12 miles from the boundary lines defined in 46 CFR part 7, except in the Gulf of Mexico. In the Gulf of Mexico, it means the area extending seaward 12 miles from the line of demarcation (COLREG lines) defined in §§ 80.740–80.850 of this chapter.

*Non-persistent or Group I oil* means a petroleum-based oil that, at the time of shipment, consists of hydrocarbon fractions—

(1) At least 50 percent of which by volume, distill at a temperature of 340 degrees C (645 degrees F); and

(2) At least 95 percent of which by volume, distill at a temperature of 370 degrees C (700 degrees F).

*Ocean* means the offshore area and nearshore area as defined in this subpart.

*Offshore area* means the area beyond 12 nautical miles measured from the boundary lines defined in 46 CFR part 7 extending seaward to 50 nautical miles, except in the Gulf of Mexico. In the Gulf of Mexico, it is the area beyond 12 nautical miles of the line of demarcation (COLREG lines) defined in §§ 80.740–80.850 of this chapter extending seaward to 50 nautical miles.

*Oil* means oil of any kind or in any form, including, but not limited to, petroleum, fuel oil, sludge, oil refuse, oil mixed with wastes other than dredge spoil.

*Oil spill removal organization (OSRO)* means an entity that provides response resources.

*On-Scene Coordinator (OSC)* means the definition in the National Oil and Hazardous Substances Pollution Contingency Plan (40 CFR part 300).

*Operating area* means Rivers and Canals, Inland, Nearshore, Great Lakes, or Offshore geographic location(s) in which a facility is handling, storing, or transporting oil.

*Operating environment* means Rivers and Canals, Inland, Great Lakes, or Ocean. These terms are used to define the conditions in which response equipment is designed to function.

*Operating in compliance with the plan* means operating in compliance with the provisions of this subpart including, ensuring the availability of the response resources by contract or other approved means, and conducting the necessary training and drills.

*Operational effectiveness monitoring* means monitoring concerned primarily with determining whether the dispersant was properly applied and how the dispersant is affecting the oil.

*Other non-petroleum oil* means a non-petroleum oil of any kind that is not generally an animal fat or vegetable oil.

*Persistent oil* means a petroleum-based oil that does not meet the distillation criteria for a non-persistent oil. For the purposes of this subpart, persistent oils are further classified based on specific gravity as follows:

(1) Group II—specific gravity of less than .85.

(2) Group III—specific gravity equal to or greater than .85 and less than .95.

(3) Group IV—specific gravity equal to or greater than .95 and less than or equal to 1.0.

(4) Group V—specific gravity greater than 1.0.

*Pre-authorization for dispersant use* means an agreement, adopted by a regional response team in coordination with area committees, which authorizes the use of dispersants at the discretion of the Federal On-Scene Coordinator without the further approval of other Federal or State authorities. These pre-authorization areas are generally limited to particular geographic areas within each region.

*Primary dispersant staging site* means a site designated within a Captain of the Port zone that has been identified as a forward staging area for dispersant application platforms and the loading of dispersant stockpiles. Primary staging sites are typically the planned locations where platforms load or reload dispersants before departing for application at the site of the discharge and may not be the locations where dispersant stockpiles are stored or application platforms are home-based.

*Qualified individual and alternate qualified individual* means a person located in the United States who meets the requirements of § 154.1026.

*Response activities* means the containment and removal of oil from the land, water, and shorelines, the temporary storage and disposal of recovered oil, or the taking of other actions as necessary to minimize or mitigate damage to the public health or welfare or the environment.

*Response resources* means the personnel, equipment, supplies, and other capability necessary to perform the response activities identified in a response plan.

*Rivers and canals* means a body of water confined within the inland area, including the Intracoastal Waterways and other waterways artificially created for navigation, that has a project depth of 12 feet or less.

*Specific gravity* means the ratio of the mass of a given volume of liquid at 15 °C (60 °F) to the mass of an equal volume of pure water at the same temperature.

*Spill management team* means the personnel identified to staff the organizational structure identified in a response plan to manage response plan implementation.

*Substantial threat of a discharge* means any incident or condition involving a facility that may create a risk of discharge of oil. Such incidents include, but are not limited to storage tank or piping failures, above ground or underground leaks, fires, explosions, flooding, spills contained within the facility, or other similar occurrences.

*Tier* means the combination of required response resources and the times within which the resources must arrive on scene.

[NOTE: Tiers are applied in three categories:

(1) Higher Volume Port Areas,

(2) Great Lakes, and

(3) All other operating environments, including rivers and canals, inland, nearshore, and offshore areas.

Appendix C, Table 4 of this part, provides specific guidance on calculating response resources. Sections 154.1045(f) and 154.1135, set forth the required times within which the response resources must arrive on-scene.]

*Vegetable oil* means a non-petroleum oil or fat derived from plant seeds, nuts, kernels or fruits, and not specifically identified elsewhere in this part.

*Worst case discharge* means in the case of an onshore facility and deepwater port, the largest foreseeable discharge in adverse weather conditions meeting the requirements of § 154.1029.

[CGD 91–036, 61 FR 7917, Feb. 29, 1996, as amended by USCG–1999–5149, 65 FR 40825, June 30, 2000; USCG–2001–8661, 74 FR 45023, Aug. 31, 2009]

### § 154.1025 Operating restrictions and interim operating authorization.

(a) The owner or operator of an MTR facility who submitted a response plan prior to May 29, 1996, may elect to comply with any of the provisions of this final rule by revising the appropriate section of the previously submitted

plan in accordance with § 154.1065. An owner or operator of an MTR facility who elects to comply with all sections of this final rule must resubmit the plan in accordance with § 154.1060 of this part.

(b) No facility subject to this subpart may handle, store, or transport oil unless it is operating in full compliance with a submitted response plan. No facility categorized under § 154.1015(c) as a significant and substantial harm facility may handle, store, or transport oil unless the submitted response plan has been approved by the COTP. The owner or operator of each new facility to which this subpart applies must submit a response plan meeting the requirements listed in § 154.1017 not less than 60 days prior to handling, storing, or transporting oil. Where applicable, the response plan shall be submitted along with the letter of intent required under § 154.110.

(c) Notwithstanding the requirements of paragraph (b) of this section, a facility categorized under § 154.1015(c) as a significant and substantial harm facility may continue to handle, store, or transport oil for 2 years after the date of submission of a response plan, pending approval of that plan. To continue to handle, store, or transport oil without a plan approved by the COTP, the facility owner or operator shall certify in writing to the COTP that the owner or operator has ensured, by contract or other approved means as described in § 154.1028(a), the availability of the necessary private personnel and equipment to respond, to the maximum extend practicable to a worst case discharge or substantial threat of such a discharge from the facility. Provided that the COTP is satisfied with the certification of response resources provided by the owner or operator of the facility, the COTP will provide written authorization for the facility to handle, store, or transport oil while the submitted response plan is being reviewed. Pending approval of the submitted response plan, deficiencies noted by the COTP must be corrected in accordance with § 154.1070.

(d) A facility may not continue to handle, store, or transport oil if—

(1) The COTP determines that the response resources identified in the facility certification statement or reference response plan do not substantially meet the requirements of this subpart;

(2) The contracts or agreements cited in the facility's certification statement or referenced response plans are no longer valid;

(3) The facility is not operating in compliance with the submitted plan;

(4) The response plan has not been resubmitted or approved within the last 5 years; or

(5) The period of the authorization under paragraph (c) of this section has expired.

### § 154.1026 Qualified individual and alternate qualified individual.

(a) The response plan must identify a qualified individual and at least one alternate who meet the requirements of this section. The qualified individual or alternate must be available on a 24-hour basis and be able to arrive at the facility in a reasonable time.

(b) The qualified individual and alternate must:

(1) Be located in the United States;

(2) Speak fluent English;

(3) Be familiar with the implementation of the facility response plan; and

(4) Be trained in the responsibilities of the qualified individual under the response plan.

(c) The owner or operator shall provide each qualified individual and alternate qualified individual identified in the plan with a document designating them as a qualified individual and specifying their full authority to:

(1) Activate and engage in contracting with oil spill removal organization(s);

(2) Act as a liaison with the predesignated Federal On-Scene Coordinator (OSC); and

(3) Obligate funds required to carry out response activities.

(d) The owner or operator of a facility may designate an organization to fulfill the role of the qualified individual and the alternate qualified individual. The organization must then identify a qualified individual and at least one alternate qualified individual who meet the requirements of this section. The facility owner or operator is required to list in the response plan the organization, the person identified as

the qualified individual, and the person or person(s) identified as the alternate qualified individual(s).

(e) The qualified individual is not responsible for—

(1) The adequacy of response plans prepared by the owner or operator; or

(2) Contracting or obligating funds for response resources beyond the authority contained in their designation from the owner or operator of the facility.

(f) The liability of a qualified individual is considered to be in accordance with the provisions of 33 USC 1321(c)(4).

### § 154.1028 Methods of ensuring the availability of response resources by contract or other approved means.

(a) When required in this subpart, the availability of response resources must be ensured by the following methods:

(1) A written contractual agreement with an oil spill removal organization. The agreement must identify and ensure the availability of specified personnel and equipment required under this subpart within stipulated response times in the specified geographic areas;

(2) Certification by the facility owner or operator that specified personnel and equipment required under this subpart are owned, operated, or under the direct control of the facility owner or operator, and are available within stipulated response times in the specified geographic areas;

(3) Active membership in a local or regional oil spill removal organization that has identified specified personnel and equipment required under this subpart that are available to respond to a discharge within stipulated response times in the specified geographic areas;

(4) A document which—

(i) Identifies the personnel, equipment, and services capable of being provided by the oil spill removal organization within stipulated response times in the specified geographic areas;

(ii) Sets out the parties' acknowledgment that the oil spill removal organization intends to commit the resources in the event of a response;

(iii) Permits the Coast Guard to verify the availability of the identified response resources through tests, inspections, and drills; and

(iv) Is referenced in the response plan; or

(5) The identification of an oil spill removal organization with specified equipment and personnel available within stipulated response times in specified geographic areas. The organization must provide written consent to being identified in the plan.

(b) The contracts and documents required in paragraph (a) of this section must be retained at the facility and must be produced for review upon request by the COTP.

### § 154.1029 Worst case discharge.

(a) The response plan must use the appropriate criteria in this section to develop the worst case discharge.

(b) For the MTR segment of a facility, not less than—

(1) Where applicable, the loss of the entire capacity of all in-line and break out tank(s) needed for the continuous operation of the pipelines used for the purposes of handling or transporting oil, in bulk, to or from a vessel regardless of the presence of secondary containment; plus

(2) The discharge from all piping carrying oil between the marine transfer manifold and the non-transportation-related portion of the facility. The discharge from each pipe is calculated as follows: The maximum time to discover the release from the pipe in hours, plus the maximum time to shut down flow from the pipe in hours (based on historic discharge data or the best estimate in the absence of historic discharge data for the facility) multiplied by the maximum flow rate expressed in barrels per hour (based on the maximum relief valve setting or maximum system pressure when relief valves are not provided) plus the total line drainage volume expressed in barrels for the pipe between the marine manifold and the non-transportation-related portion of the facility; and

(c) For a mobile facility it means the loss of the entire contents of the container in which the oil is stored or transported.

### § 154.1030 General response plan contents.

(a) The plan must be written in English.

(b) A response plan must be divided into the sections listed in this paragraph and formatted in the order specified herein unless noted otherwise. It must also have some easily found marker identifying each section listed below. The following are the sections and subsections of a facility response plan:

(1) Introduction and plan contents.

(2) Emergency response action plan:

(i) Notification procedures.

(ii) Facility's spill mitigation procedures.

(iii) Facility's response activities.

(iv) Fish and wildlife and sensitive environments.

(v) Disposal plan.

(3) Training and Exercises:

(i) Training procedures.

(ii) Exercise procedures.

(4) Plan review and update procedures.

(5) Appendices.

(i) Facility-specific information.

(ii) List of contacts.

(iii) Equipment lists and records.

(iv) Communications plan.

(v) Site-specific safety and health plan.

(vi) List of acronyms and definitions.

(vii) A geographic-specific appendix for each zone in which a mobile facility operates.

(c) The required contents for each section and subsection of the plan are contained in §§ 154.1035, 154.1040, and 154.1041, as appropriate.

(d) The sections and subsections of response plans submitted to the COTP must contain at a minimum all the information required in §§ 154.1035, 154.1040, and 154.1041, as appropriate. It may contain other appropriate sections, subsections, or information that are required by other Federal, State, and local agencies.

(e) For initial and subsequent submission, a plan that does not follow the format specified in paragraph (b) of this section must be supplemented with a detailed cross-reference section to identify the location of the applicable sections required by this subpart.

(f) The information contained in a response plan must be consistent with the National Oil and Hazardous Substances Pollution Contingency Plan (NCP) (40 CFR part 300) and the Area Contingency Plan(s) (ACP) covering the area in which the facility operates. Facility owners or operators shall ensure that their response plans are in accordance with the ACP in effect 6 months prior to initial plan submission or the annual plan review required under § 154.1065(a). Facility owners or operators are not required to, but may at their option, conform to an ACP which is less than 6 months old at the time of plan submission.

### § 154.1035 Specific requirements for facilities that could reasonably be expected to cause significant and substantial harm to the environment.

(a) *Introduction and plan content.* This section of the plan must include facility and plan information as follows:

(1) The facility's name, street address, city, county, state, ZIP code, facility telephone number, and telefacsimile number, if so equipped. Include mailing address if different from street address.

(2) The facility's location described in a manner that could aid both a reviewer and a responder in locating the specific facility covered by the plan, such as, river mile or location from a known landmark that would appear on a map or chart.

(3) The name, address, and procedures for contacting the facility's owner or operator on a 24-hour basis.

(4) A table of contents.

(5) During the period that the submitted plan does not have to conform to the format contained in this subpart, a cross index, if appropriate.

(6) A record of change(s) to record information on plan updates.

(b) *Emergency Response Action Plan.* This section of the plan must be organized in the subsections described in this paragraph:

(1) *Notification procedures.* (i) This subsection must contain a prioritized list identifying the person(s), including name, telephone number, and their role in the plan, to be notified of a discharge or substantial threat of a discharge of oil. The telephone number need not be provided if it is listed separately in the list of contacts required in the plan. This Notification Procedures listing must include—

(A) Facility response personnel, the spill management team, oil spill removal organizations, and the qualified individual(s) and the designated alternate(s); and

(B) Federal, State, or local agencies, as required.

(ii) This subsection must include a form, such as that depicted in Figure 1, which contains information to be provided in the initial and follow-up notifications to Federal, State, and local agencies. The form shall include notification of the National Response Center as required in part 153 of this chapter. Copies of the form also must be placed at the location(s) from which notification may be made. The initial notification form must include space for the information contained in Figure 1. The form must contain a prominent statement that initial notification must not be delayed pending collection of all information.

FIGURE 1—INFORMATION ON DISCHARGE *

[Involved Parties]

| (A) Reporting party | (B) Suspected responsible party |
|---|---|
| Name | Name |
| Phones () – | Phones () – |
| Company | Company |
| Position | Organization Type: |
| Address | Private citizen |
| Address | Private enterprise |
| | Public utility |
| | Local government |
| | State government |
| | Federal government |
| City | City |
| State | State |
| Zip | Zip |

* It is not necessary to wait for all information before calling NRC. National Response Center—1–800–424–8802 or direct telephone: 202–267–2675.

Were materials Discharged (Y/N)?
Calling for Responsible Party (Y/N)

**Incident Description**

Source and/or Cause of Incident

Date - - Time:
Cause

Incident Address/Location Nearest City
Distance from City
Storage Tank Container Type—Above ground (Y/N) Below ground (Y/N) Unknown

**Facility Capacity**

Tank Capacity
Latitude Degrees
Longitude Degrees
Mile Post or River Mile

**Materials**

Discharge Unit of Quantity Measure Discharged Material Quantity in Water

**Response Action**

Actions Taken to Correct or Mitigate Incident

**Impact**

Number of Injuries Number of Fatalities
Were there Evacuations (Y/N/U)? Number Evacuated
Was there any Damage (Y/N/U)? Damage in Dollars

| Additional Information |
| --- |
| Any information about the Incident not recorded elsewhere in the report |
| **Caller Notifications** |
| USCG EPA State Other |

(2) *Facility's spill mitigation procedures.* (i) This subsection must describe the volume(s) and oil groups that would be involved in the—

(A) Average most probable discharge from the MTR facility;

(B) Maximum most probable discharge from the MTR facility;

(C) Worst case discharge from the MTR facility; and

(D) Where applicable, the worst case discharge from the non-transportation-related facility. This must be the same volume provided in the response plan for the non-transportation-related facility.

(ii) This subsection must contain prioritized procedures for facility personnel to mitigate or prevent any discharge or substantial threat of a discharge of oil resulting from operational activities associated with internal or external facility transfers including specific procedures to shut down affected operations. Facility personnel responsible for performing specified procedures to mitigate or prevent any discharge or potential discharge shall be identified by job title. A copy of these procedures shall be maintained at the facility operations center. These procedures must address actions to be taken by facility personnel in the event of a discharge, potential discharge, or emergency involving the following equipment and scenarios:

(A) Failure of manifold, mechanical loading arm, other transfer equipment, or hoses, as appropriate;

(B) Tank overfill;

(C) Tank failure;

(D) Piping rupture;

(E) Piping leak, both under pressure and not under pressure, if applicable;

(F) Explosion or fire; and

(G) Equipment failure (e.g. pumping system failure, relief valve failure, or other general equipment relevant to operational activities associated with internal or external facility transfers.)

(iii) This subsection must contain a listing of equipment and the responsibilities of facility personnel to mitigate an average most probable discharge.

(3) *Facility's response activities.* (i) This subsection must contain a description of the facility personnel's responsibilities to initiate a response and supervise response resources pending the arrival of the qualified individual.

(ii) This subsection must contain a description of the responsibilities and authority of the qualified individual and alternate as required in § 154.1026.

(iii) This subsection must describe the organizational structure that will be used to manage the response actions. This structure must include the following functional areas.

(A) Command and control;

(B) Public information;

(C) Safety;

(D) Liaison with government agencies;

(E) Spill Operations;

(F) Planning;

(G) Logistics support; and

(H) Finance.

(iv) This subsection of the plan must identify the oil spill removal organizations and the spill management team that will be capable of providing the following resources:

(A) Equipment and supplies to meet the requirements of §§ 154.1045, 154.1047, or subparts H or I of this part, as appropriate.

(B) Trained personnel necessary to continue operation of the equipment and staff the oil spill removal organization and spill management team for the first 7 days of the response.

(v) This section must include job descriptions for each spill management team member within the organizational structure described in paragraph

(b)(3)(iii) of this section. These job descriptions must include the responsibilities and duties of each spill management team member in a response action.

(vi) For facilities that handle, store, or transport group II through group IV petroleum oils, and that operate in waters where dispersant use is pre-authorized, this subsection of the plan must also separately list the resource providers and specific resources, including appropriately trained dispersant-application personnel, necessary to provide the dispersant capabilities required in this subpart. All resource providers and resources must be available by contract or other approved means as described in § 154.1028(a). The dispersant resources to be listed within this section must include the following:

(A) Identification of each primary dispersant staging site to be used by each dispersant-application platform to meet the requirements of this subpart.

(B) Identification of the platform type, resource-providing organization, location, and dispersant payload for each dispersant-application platform identified. Location data must identify the distance between the platform's home base and the identified primary dispersant staging site for this section.

(C) For each unit of dispersant stockpile required to support the effective daily application capacity (EDAC) of each dispersant-application platform necessary to sustain each intended response tier of operation, identify the dispersant product resource provider, location, and volume. Location data must include the stockpile's distance to the primary staging sites where the stockpile would be loaded onto the corresponding platforms.

(D) If an oil spill removal organization has been evaluated by the Coast Guard, and its capability is equal to or exceeds the response capability needed by the owner or operator, the section may identify only the oil spill removal organization, and not the information required in paragraphs (b)(3)(vi)(A) through (b)(3)(vi)(C) of this section.

(vii) This subsection of the plan must also separately list the resource providers and specific resources necessary to provide aerial oil tracking capabilities required in this subpart. The oil tracking resources to be listed within this section must include the following:

(A) The identification of a resource provider; and

(B) Type and location of aerial surveillance aircraft that are ensured available, through contract or other approved means, to meet the oil tracking requirements of § 154.1045(j).

(viii) For mobile facilities that operate in more than one COTP zone, the plan must identify the oil spill removal organization and the spill management team in the applicable geographic-specific appendix. The oil spill removal organization(s) and the spill management team discussed in paragraph (b)(3)(iv) of this section must be included for each COTP zone in which the facility will handle, store, or transport oil in bulk.

(ix) For mobile facilities that operate in more than one COTP zone, the plan must identify the oil spill removal organization and the spill management team in the applicable geographic-specific appendix. The oil spill removal organization(s) and the spill management team discussed in paragraph (b)(3)(iv)(A) of this section must be included for each COTP zone in which the facility will handle, store, or transport oil in bulk.

(4) *Fish and wildlife and sensitive environments.* (i) This section of the plan must identify areas of economic importance and environmental sensitivity, as identified in the ACP, which are potentially impacted by a worst case discharge. ACPs are required under section 311(j)(4) of the FWPCA to identify fish and wildlife and sensitive environments. The applicable ACP shall be used to designate fish and wildlife and sensitive environments in the plan. Changes to the ACP regarding fish and wildlife and sensitive environments shall be included in the annual update of the response plan, when available.

(ii) For a worst case discharge from the facility, this section of the plan must—

(A) List all fish and wildlife and sensitive environments identified in the ACP which are potentially impacted by a discharge of persistent oils, non-persistent oils, or non-petroleum oils.

(B) Describe all the response actions that the facility anticipates taking to protect these fish and wildlife and sensitive environments.

(C) Contain a map or chart showing the location of those fish and wildlife and sensitive environments which are potentially impacted. The map or chart shall also depict each response action that the facility anticipates taking to protect these areas. A legend of activities must be included on the map page.

(iii) For a worst case discharge, this section must identify appropriate equipment and required personnel, available by contract or other approved means as described in § 154.1028, to protect fish and wildlife and sensitive environments which fall within the distances calculated using the methods outlined in this paragraph as follows:

(A) Identify the appropriate equipment and required personnel to protect all fish and wildlife and sensitive environments in the ACP for the distances, as calculated in paragraph (b)(4)(iii)(B) of this section, that the persistent oils, non-persistent oils, or non-petroleum oils are likely to travel in the noted geographic area(s) and number of days listed in table 2 of appendix C of this part;

(B) Calculate the distances required by paragraph (b)(4)(iii)(A) of this section by selecting one of the methods described in this paragraph;

(*1*) Distances may be calculated as follows:

(*i*) For persistent oils and non-petroleum oils discharged into non-tidal waters, the distance from the facility reached in 48 hours at maximum current.

(*ii*) For persistent and non-petroleum oils discharged into tidal waters, 15 miles from the facility down current during ebb tide and to the point of maximum tidal influence or 15 miles, whichever is less, during flood tide.

(*iii*) For non-persistent oils discharged into non-tidal waters, the distance from the facility reached in 24 hours at maximum current.

(*iv*) For non-persistent oils discharged into tidal waters, 5 miles from the facility down current during ebb tide and to the point of maximum tidal influence or 5 miles, whichever is less, during flood tide.

(*2*) A spill trajectory or model may be substituted for the distances calculated under paragraph (b)(4)(iii)(B)(*l) of this section*. The spill trajectory or model must be acceptable to the COTP.

(*3*) The procedures contained in the Environmental Protection's Agency's regulations on oil pollution prevention for non-transportation-related onshore facilities at 40 CFR part 112, appendix C, Attachment C-III may be substituted for the distances listed in non-tidal and tidal waters; and

(C) Based on historical information or a spill trajectory or model, the COTP may require the additional fish and wildlife and sensitive environments also be protected.

(5) *Disposal Plan*. This subsection must describe any actions to be taken or procedures to be used to ensure that all recovered oil and oil contaminated debris produced as a result of any discharge are disposed according to Federal, state, or local requirements.

(c) *Training and exercises*. This section must be divided into the following two subsections:

(1) *Training procedures*. This subsection must describe the training procedures and programs of the facility owner or operator to meet the requirements in § 154.1050.

(2) *Exercise procedures*. This subsection must describe the exercise program to be carried out by the facility owner or operator to meet the requirements in § 154.1055.

(d) *Plan review and update procedures*. This section must address the procedures to be followed by the facility owner or operator to meet the requirements of § 154.1065 and the procedures to be followed for any post-discharge review of the plan to evaluate and validate its effectiveness.

(e) *Appendices*. This section of the response plan must include the appendices described in this paragraph.

(1) *Facility-specific information*. This appendix must contain a description of the facility's principal characteristics.

(i) There must be a physical description of the facility including a plan of the facility showing the mooring areas, transfer locations, control stations, locations of safety equipment, and the location and capacities of all piping and storage tanks.

(ii) The appendix must identify the sizes, types, and number of vessels that the facility can transfer oil to or from simultaneously.

(iii) The appendix must identify the first valve(s) on facility piping separating the transportation-related portion of the facility from the non-transportation-related portion of the facility, if any. For piping leading to a manifold located on a dock serving tank vessels, this valve is the first valve inside the secondary containment required by 40 CFR part 112.

(iv) The appendix must contain information on the oil(s) and hazardous material handled, stored, or transported at the facility in bulk. A material safety data sheet meeting the requirements of 29 CFR 1910.1200, 33 CFR 154.310(a)(5) or an equivalent will meet this requirement. This information can be maintained separately providing it is readily available and the appendix identifies its location. This information must include—

(A) The generic or chemical name;

(B) A description of the appearance and odor;

(C) The physical and chemical characteristics;

(D) The hazards involved in handling the oil(s) and hazardous materials. This shall include hazards likely to be encountered if the oil(s) and hazardous materials come in contact as a result of a discharge; and

(E) A list of firefighting procedures and extinguishing agents effective with fires involving the oil(s) and hazardous materials.

(v) The appendix may contain any other information which the facility owner or operator determines to be pertinent to an oil spill response.

(2) *List of contacts.* This appendix must include information on 24-hour contact of key individuals and organizations. If more appropriate, this information may be specified in a geographic-specific appendix. The list must include—

(i) The primary and alternate qualified individual(s) for the facility;

(ii) The contact(s) identified under paragraph (b)(3)(iv) of this section for activation of the response resources; and

(iii) Appropriate Federal, State, and local officials.

(3) *Equipment list and records.* This appendix must include the information specified in this paragraph.

(i) The appendix must contain a list of equipment and facility personnel required to respond to an average most probable discharge, as defined in §154.1020. The appendix must also list the location of the equipment.

(ii) The appendix must contain a detailed listing of all the major equipment identified in the plan as belonging to an oil spill removal organization(s) that is available, by contract or other approved means as described in §154.1028(a), to respond to a maximum most probable or worst case discharge, as defined in §154.1020. The detailed listing of all major equipment may be located in a separate document referenced by the plan. Either the appendix or the separate document referenced in the plan must provide the location of the major response equipment.

(iii) It is not necessary to list response equipment from oil spill removal organization(s) when the organization has been classified by the Coast Guard and their capacity has been determined to equal or exceed the response capability needed by the facility. For oil spill removal organization(s) classified by the Coast Guard, the classification must be noted in this section of the plan. When it is necessary for the appendix to contain a listing of response equipment, it shall include all of the following items that are identified in the response plan: Skimmers; booms; dispersant application, in-situ burning, bioremediation equipment and supplies, and other equipment used to apply other chemical agents on the NCP Product Schedule (if applicable); communications, firefighting, and beach cleaning equipment; boats and motors; disposal and storage equipment; and heavy equipment. The list must include for each piece of equipment—

(A) The type, make, model, and year of manufacture listed on the nameplate of the equipment;

(B) For oil recovery devices, the effective daily recovery rate, as determined using section 6 of appendix C of this part;

(C) For containment boom, the overall boom height (draft and freeboard) and type of end connectors;

(D) The spill scenario in which the equipment will be used for or which it is contracted;

(E) The total daily capacity for storage and disposal of recovered oil;

(F) For communication equipment, the type and amount of equipment intended for use during response activities. Where applicable, the primary and secondary radio frequencies must be specified.

(G) Location of the equipment; and

(H) The date of the last inspection by the oil spill removal organization(s).

(4) *Communications plan.* This appendix must describe the primary and alternate method of communication during discharges, including communications at the facility and at remote locations within the areas covered by the response plan. The appendix may refer to additional communications packages provided by the oil spill removal organization. This may reference another existing plan or document.

(5) *Site-specific safety and health plan.* This appendix must describe the safety and health plan to be implemented for any response location(s). It must provide as much detailed information as is practicable in advance of an actual discharge. This appendix may reference another existing plan requiring under 29 CFR 1910.120.

(6) *List of acronyms and definitions.* This appendix must list all acronyms used in the response plan including any terms or acronyms used by Federal, State, or local governments and any operational terms commonly used at the facility. This appendix must include all definitions that are critical to understanding the response plan.

[CGD 91–036, 61 FR 7917, Feb. 29, 1996, as amended by USCG–2000–7223, 65 FR 40058, June 29, 2000; USCG–2001–9286, 66 FR 33641, June 25, 2001; USCG–2008–0179, 73 FR 35014, June 19, 2008; USCG–2001–8661, 74 FR 45023, Aug. 31, 2009]

### § 154.1040 Specific requirements for facilities that could reasonably be expected to cause substantial harm to the environment.

(a) The owner or operator of a facility that, under § 154.1015, could reasonably be expected to cause substantial harm to the environment, shall submit a response plan that meets the requirements of § 154.1035, except as modified by this section.

(b) The facility's response activities section of the response plan need not list the facility or corporate organizational structure that will be used to manage the response, as required by § 154.1035(b)(3)(iii).

(c) The owner or operator of a facility must ensure the availability of response resources required to be identified in § 154.1035(b)(3)(iv) by contract or other approved means described in § 154.1028.

(d) A facility owner or operator must have at least 200 feet of containment boom and the means of deploying and anchoring the boom available at the spill site within 1 hour of the detection of a spill to respond to the average most probable discharge in lieu of the quantity of containment boom specified in § 154.1045(c)(1). Based on site-specific or facility-specific information, the COTP may specify that additional quantities of containment boom are available within one hour. In addition, there must be adequate sorbent material for initial response to an average most probable discharge. If the facility is a fixed facility, the containment boom and sorbent material must be located at the facility. If the facility is a mobile facility, the containment boom and sorbent must be available locally and be at the site of the discharge within 1 hour of its discovery.

### § 154.1041 Specific response information to be maintained on mobile MTR facilities.

(a) Each mobile MTR facility must carry the following information as contained in the response plan when performing transfer operations:

(1) A description of response activities for a discharge which may occur during transfer operations. This may be a narrative description or a list of

procedures to be followed in the event of a discharge.

(2) Identity of response resources to respond to a discharge from the mobile MTR facility.

(3) List of the appropriate persons and agencies (including the telephone numbers) to be contacted in regard to a discharge and its handling, including the National Response Center.

(b) The owner or operator of the mobile facility must also retain the information in this paragraph at the principal place of business.

**§ 154.1045 Response plan development and evaluation criteria for facilities that handle, store, or transport Group I through Group IV petroleum oils.**

(a) The owner or operator of a facility that handles, stores, or transports Group I through Group IV petroleum oils shall use the criteria in this section to evaluate response resources identified in the response plan for the specified operating environment.

(1) The criteria in Table 1 of appendix C of this part are to be used solely for identification of appropriate equipment in a response plan. These criteria reflect conditions used for planning purposes to select mechanical response equipment and are not conditions that would limit response actions or affect normal facility operations.

(2) The response resources must be evaluated considering limitations for the COTP zones in which the facility operates, including but not limited to—

(i) Ice conditions;

(ii) Debris;

(iii) Temperature ranges;

(iv) Weather-related visibility; and

(v) Other appropriate environmental conditions as determined by the COTP.

(3) The COTP may reclassify a specific body of water or location within the COTP zone. Any reclassifications will be identified by the COTP in the applicable ACP. Reclassifications may be to—

(i) A more stringent operating environment if the prevailing wave conditions exceed the significant wave height criteria during more than 35 percent of the year; or

(ii) A less stringent operating environment if the prevailing wave conditions do not exceed the significant wave height criteria for the less stringent operating environment during more than 35 percent of the year.

(b) Response equipment must—

(1) Meet or exceed the operating criteria listed in Table 1 of appendix C of this part;

(2) Function in the applicable operating environment; and

(3) Be appropriate for the petroleum oil carried.

(c) The response plan for a facility that handles, stores, or transports Group I through Group IV petroleum oils must identify response resources that are available, by contract or other approved means as described in § 154.1028(a)(1)(4), to respond to the facility's average most probable discharge. The response resources must include, at a minimum—

(1) 1,000 feet of containment boom or two times the length of the largest vessel that regularly conducts petroleum oil transfers to or from the facility, whichever is greater, and the means of deploying and anchoring the boom available at the spill site within 1 hour of the detection of a spill; and

(2) Oil recovery devices and recovered oil storage capacity capable of being at the spill site within 2 hours of the discovery of a petroleum oil discharge from a facility.

(d) The response plan for a facility that handles, stores, or transports Group I through Group IV petroleum oils must identify response resources that are available, by contract or other approved means as described in § 154.1028(a)(1)(4), to respond to a discharge up to the facility's maximum most probable discharge volume.

(1) The response resources must include sufficient containment boom, oil recovery devices, and storage capacity for any recovery of up to the maximum most probable discharge planning volume, as contained in appendix C.

(2) The response resources must be appropriate for each group of petroleum oil identified in § 154.1020 that is handled, stored, or transported by the facility.

(3) These response resources must be positioned such that they can arrive at the scene of a discharge within the following specified times:

(i) The equipment identified in paragraphs (c)(1) and (c)(2) of this section or in §154.1040(d) must arrive within the times specified in those paragraphs or that section, as appropriate.

(ii) In higher volume port areas and the Great Lakes, response resources must be capable of arriving on scene within 6 hours of the discovery of a petroleum oil discharge from a facility.

(iii) In all other locations, response resources must be capable of arriving on scene within 12 hours of the discovery of a petroleum oil discharge from a facility.

(4) The COTP may determine that mobilizing response resources to an area beyond the response times indicated in this paragraph invalidates the response plan. In this event, the COTP may impose additional operational restrictions (e.g., limitations on the number of transfers at a facility), or, at the COTP's discretion, the facility may operate with temporarily modified response plan development and evaluation criteria (e.g., modified response times, alternate response resources, etc.).

(e) The response plan for a facility that handles, stores, or transports Group I through Group IV petroleum oils must identify the response resources that are available, by contract or other approved means as described in §154.1028(a)(1)(4), to respond to the worst case discharge volume of petroleum oil to the maximum extent practicable.

(1) The location of these response resources must be suitable to meet the response times identified in paragraph (f) of this section for the applicable geographic area(s) of operation and response tier.

(2) The response resources must be appropriate for—

(i) The volume of the facility's worst case discharge;

(ii) Group(s) of petroleum oil as identified in §154.1020 that are handled, stored, or transported by the facility; and

(iii) The geographic area(s) in which the facility operates.

(3) The response resources must include sufficient boom, oil recovery devices, and storage capacity to recover the worst case discharge planning volumes.

(4) The guidelines in appendix C of this part must be used for calculating the quantity of response resources required to respond at each tier to the worst case discharge to the maximum extent practicable.

(5) When determining response resources necessary to meet the requirements of this section, a portion of those resources must be capable of use in close-to-shore response activities in shallow water. The following percentages of the response equipment identified for the applicable geographic area must be capable of operating in waters of 6 feet or less depth.

(i) Offshore—10 percent.

(ii) Nearshore/inland/Great Lakes/rivers and canals—20 percent.

(6) The COTP may determine that mobilizing response resources to an area beyond the response times indicated in this paragraph invalidates the response plan. In this event, the COTP may impose additional operational restrictions (e.g., limitations on the number of transfers at a facility), or, at the COTP's discretion, the facility may be permitted to operate with temporarily modified response plan development and evaluation criteria (e.g., modified response times, alternate response resources, etc.).

(f) Response equipment identified in a response plan for a facility that handles, stores, or transports Group I through Group IV petroleum oils must be capable of arriving on scene within the times specified in this paragraph for the applicable response tier in a higher volume port area, Great Lakes, and in other areas. Response times for these tiers from the time of discovery of a discharge are—

| | Tier 1 (hrs.) | Tier 2 (hrs.) | Tier 3 (hrs.) |
|---|---|---|---|
| Higher volume port area (except for a TAPAA facility located in Prince William Sound, see §154.1135) | 6 | 30 | 54 |
| Great Lakes | 12 | 36 | 60 |
| All other river and canal, inland, nearshore, and offshore areas | 12 | 36 | 60 |

(g) For the purposes of arranging for response resources for a facility that handles, stores, or transports Group I

through Group IV petroleum oils, by contract or other approved means as described in § 154.1028(a)(1)–(4), response equipment identified for Tier 1 plan credit must be capable of being mobilized and en route to the scene of a discharge within 2 hours of notification. The notification procedures identified in the plan must provide for notification and authorization of mobilization of identified Tier 1 response resources—

(1) Either directly or through the qualified individual; and

(2) Within 30 minutes of a discovery of a discharge or substantial threat of discharge.

(h) Response resources identified for Tier 2 and Tier 3 plan credit must be capable of arriving on scene within the time specified for the applicable tier.

(i) The owner or operator of a facility that handles, stores, or transports groups II through IV petroleum oils within the inland, nearshore, or offshore areas where pre-authorization for dispersant use exists must identify in their response plan, and ensure the availability of, through contract or other approved means, response resources capable of conducting dispersant operations within those areas.

(1) Dispersant response resources must be capable of commencing dispersant-application operations at the site of a discharge within 7 hours of the decision by the Federal On-Scene Coordinator to use dispersants.

(2) Dispersant response resources must include all of the following:

(i) Sufficient volumes of dispersants for application as required by paragraph (i)(3) of this section. Any dispersants identified in a response plan must be of a type listed on the National Oil and Hazardous Substances Pollution Contingency Plan Product Schedule (which is contained in 40 CFR part 300, and available online from the U.S. Government Printing Office).

(ii) Dispersant-application platforms capable of delivering and applying the dispersant on a discharge in the amounts as required by paragraph (i)(3) of this section. At least 50 percent of each EDAC tier requirement must be achieved through the use of fixed-wing, aircraft-based application platforms. For dispersant-application platforms not detailed within the DMP2, adequacy of performance criteria must be documented by presentation of independent evaluation materials (e.g., field tests and reports of actual use) that record the performance of the platform.

(iii) Dispersant-application systems that are consistent in design with, and are capable of applying dispersants within, the performance criteria in ASTM F1413–07 (incorporated by reference, *see* § 154.106). For dispersant-application systems not fully covered by ASTM F1413–07, such as fire monitor-type applicators, adequacy of performance criteria must be documented by presentation of independent evaluation materials (e.g., laboratory tests, field tests, and reports of actual use) that record the design of performance specifications.

(iv) Dispersant-application personnel trained in and capable of applying dispersants according to the recommended procedures contained within ASTM F1737–07 (incorporated by reference, *see* § 154.106).

(3) Dispersant stockpiles, application platforms, and other supporting resources must be available in a quantity and type sufficient to treat a facility's worst-case discharge (as determined by using the criteria in appendix C, section 8) or in quantities sufficient to meet the requirements in Table 154.1045(i) of this section, whichever is the lesser amount.

TABLE 154.1045(I)—TIERS FOR EFFECTIVE DAILY APPLICATION CAPABILITY

| | Response time for completed application (hours) | Dispersant application dispersant: oil treated in gallons (Gulf Coast) | Dispersant application dispersant: oil treated in gallons all other U.S. |
|---|---|---|---|
| Tier 1 | 12 | 8,250:165,000 | 4,125:82,500 |
| Tier 2 | 36 | 23,375:467,000 | 23,375:467,000 |
| Tier 3 | 60 | 23,375:467,000 | 23,375:467,000 |

TABLE 154.1045(I)—TIERS FOR EFFECTIVE DAILY APPLICATION CAPABILITY—Continued

| | Response time for completed application (hours) | Dispersant application dispersant: oil treated in gallons (Gulf Coast) | Dispersant application dispersant: oil treated in gallons all other U.S. |
|---|---|---|---|
| Total | 60 | 55,000:1,100,000 | 50,875:1,017,500 |

NOTE TO TABLE 154.1045(I): Gulf Coast Tier 1 is higher due to greater potential spill size and frequency in that area, and it is assumed that dispersant stockpiles would be centralized in the Gulf area. Alternative application ratios may be considered based upon submission to Coast Guard Headquarters, Office of Incident Management and Preparedness (CG–533, 202–372–2234, 2100 2nd Street, SW., room 2100, Washington, DC 20593) of peer-reviewed scientific evidence of improved capability.

(j) The owner or operator of a facility handling Groups I through IV petroleum oil as a primary cargo must identify in the response plan, and ensure the availability through contract or other approved means, of response resources necessary to provide aerial oil tracking to support oil spill assessment and cleanup activities. Facilities operating exclusively on inland rivers are not required to comply with this paragraph. Aerial oil tracking resources must:

(1) Be capable of arriving at the site of a discharge in advance of the arrival of response resources identified in the plan for tiers 1, 2, and 3 Worst-Case Discharge response times, and for a distance up to 50 nautical miles from shore (excluding inland rivers);

(2) Be capable of supporting oil spill removal operations continuously for three 10-hour operational periods during the initial 72 hours of the discharge;

(3) Include appropriately located aircraft and personnel capable of meeting the response time requirement for oil tracking from paragraph (j)(1) of this section; and

(4) Include sufficient numbers of aircraft, pilots, and trained observation personnel to support oil spill removal operations, commencing upon initial assessment, and capable of coordinating on-scene cleanup operations, including dispersant and mechanical recovery operations. Observation personnel must be trained in:

(i) The protocols of oil-spill reporting and assessment, including estimation of slick size, thickness, and quantity; and

(ii) The use of assessment techniques in ASTM F1779–08 (incorporated by reference, *see* §154.106), and familiar with the use of other guides, such as NOAA's ''Open Water Oil Identification Job Aid for Aerial Observation,'' and NOAA's ''Characteristic Coastal Habitats'' guide (available on the Internet at *http://response.restoration.noaa.gov/*use the following links in the order presented: Home|Emergency Response|Responding to Oil Spills).

(k) A response plan for a facility that handles, stores, or transports Group I through Group IV petroleum oils must identify response resources with firefighting capability. The owner or operator of a facility that does not have adequate firefighting resources located at the facility or that can not rely on sufficient local firefighting resources must identify and ensure, by contract or other approved means as described in §154.1028(a)(1)–(4), the availability of adequate firefighting resources. The response plan must also identify an individual located at the facility to work with the fire department for petroleum oil fires. This individual shall also verify that sufficient well-trained firefighting resources are available within a reasonable time to respond to a worst case discharge. The individual may be the qualified individual as defined in §154.1020 and identified in the response plan or another appropriate individual located at the facility.

(l) The response plan for a facility that handles, stores, or transports Groups I through IV petroleum oils must identify equipment and required personnel available, by contract or other approved means as described in §154.1028(a) (1)–(4), to protect fish and wildlife and sensitive environments.

(1) Except as set out in paragraph (k)(2) of this section, the identified response resources must include the quantities of boom sufficient to protect fish and wildlife and sensitive environments as required by §154.1035(b)(4).

(2) The resources and response methods identified in a facility response plan must be consistent with the required resources and response methods to be used in fish and wildlife and sensitive environments, contained in the appropriate ACP. Facility owners or operators shall ensure that their response plans are in accordance with the ACP in effect 6 months prior to initial plan submission or the annual plan review required under §154.1065(a). Facility owners or operators are not required to, but may at their option, conform to an ACP which is less than 6 months old at the time of plan submission.

(m) The response plan for a facility that handles, stores, or transports Groups I through IV petroleum oils must identify an oil spill removal organization(s) with response resources that are available, by contract or other approved means as described in §154.1028(a) (1)–(4), to effect a shoreline cleanup operation commensurate with the quantity of emulsified petroleum oil to be planned for in shoreline cleanup operations.

(1) Except as required in paragraph (l)(2) of this section, the shoreline cleanup response resources required must be determined as described in appendix C of this part.

(2) The resources and response methods identified in a facility response plan must be consistent with the required shoreline cleanup resources and methods contained in the appropriate ACP. Facility owners or operators shall ensure that their response plans are in accordance with the ACP in effect 6 months prior to initial plan submission or the annual plan review required under §154.1065(a). Facility owners or operators are not required to, but may at their option, conform to an ACP which is less than 6 months old at the time of plan submission.

(n) Appendix C of this part describes the procedures to determine the maximum extent practicable quantity of response resources that must be identified and available, by contract or other approved means as described in §154.1028(a) (1)–(4), for the maximum most probable discharge volume, and for each worst case discharge response tier.

(1) Included in appendix C of this part is a cap that recognizes the practical and technical limits of response capabilities that an individual facility owner or operator can be expected to contract for in advance.

(2) Table 5 in appendix C of this part lists the caps that apply in February 18, 1993, and February 18, 1998. Depending on the quantity and type of petroleum oil handled by the facility and the facility's geographic area of operations, the resource capability caps in this table may be reached. The owner or operator of a facility whose estimated recovery capacity exceeds the applicable contracting caps in Table 5 shall identify sources of additional equipment equal to twice the cap listed in Tiers 1, 2, and 3 or the amount necessary to reach the calculated planning volume, whichever is lower. The identified resources must be capable of arriving on scene not later than the Tier 1, 2, and 3 response times in this section. No contract is required. While general listings of available response equipment may be used to identify additional sources, a response plan must identify the specific sources, locations, and quantities of equipment that a facility owner or operator has considered in his or her planning. When listing Coast Guard classified oil spill removal organization(s) which have sufficient removal capacity to recover the volume above the response capability cap for the specific facility, as specified in Table 5 in appendix C of this part, it is not necessary to list specific quantities of equipment.

(o) The Coast Guard will continue to evaluate the environmental benefits, cost efficiency and practicality of increasing mechanical recovery capability requirements. This continuing evaluation is part of the Coast Guard's long term commitment to achieving and maintaining an optimum mix of oil spill response capability across the full spectrum of response modes. As best available technology demonstrates a need to evaluate or change mechanical

recovery capacities, a review of cap increases and other requirements contained within this subpart may be performed. Any changes in the requirements of this section will occur through a public notice and comment process. During this review, the Coast Guard will determine if established caps remain practicable and if increased caps will provide any benefit to oil spill recovery operations. The review will include, at least, an evaluation of:

(1) Best available technologies for containment and recovery;

(2) Oil spill tracking technology;

(3) High rate response techniques;

(4) Other applicable response technologies; and

(5) Increases in the availability of private response resources.

[CGD 91–036, 61 FR 7917, Feb. 29, 1996, as amended by USCG–2001–8661, 74 FR 45024, Aug. 31, 2009]

### § 154.1047 Response plan development and evaluation criteria for facilities that handle, store, or transport Group V petroleum oils.

(a) An owner or operator of a facility that handles, stores, or transports Group V petroleum oils must provide information in his or her response plan that identifies—

(1) Procedures and strategies for responding to a worst case discharge of Group V petroleum oils to the maximum extent practicable; and

(2) Sources of the equipment and supplies necessary to locate, recover, and mitigate such a discharge.

(b) An owner or operator of a facility that handles, stores, or transports Group V petroleum oil must ensure that any equipment identified in a response plan is capable of operating in the conditions expected in the geographic area(s) in which the facility operates using the criteria in Table 1 of appendix C of this part. When evaluating the operability of equipment, the facility owner or operator must consider limitations that are identified in the ACPs for the COTP zones in which the facility operates, including—

(1) Ice conditions;

(2) Debris;

(3) Temperature ranges; and

(4) Weather-related visibility.

(c) The owner or operator of a facility that handles, stores, or transports Group V petroleum oil must identify the response resources that are available by contract or other approved means as described in § 154.1028. The equipment identified in a response plan must include—

(1) Sonar, sampling equipment, or other methods for locating the petroleum oil on the bottom or suspended in the water column;

(2) Containment boom, sorbent boom, silt curtains, or other methods for containing the petroleum oil that may remain floating on the surface or to reduce spreading on the bottom;

(3) Dredges, pumps, or other equipment necessary to recover petroleum oil from the bottom and shoreline;

(4) Equipment necessary to assess the impact of such discharges; and

(5) Other appropriate equipment necessary to respond to a discharge involving the type of petroleum oil handled, stored, or transported.

(d) Response resources identified in a response plan for a facility that handles, stores, or transports Group V petroleum oils under paragraph (c) of this section must be capable of being at the spill site within 24 hours of discovery of a discharge.

(e) A response plan for a facility that handles, stores, or transports Group V petroleum oils must identify response resources with firefighting capability. The owner or operator of a facility that does not have adequate firefighting resources located at the facility or that can not rely on sufficient local firefighting resources must identity and ensure, by contract or other approved means as described in § 154.1028, the availability of adequate firefighting resources. The response plan must also identify an individual located at the facility to work with the fire department for petroleum oil fires. This individual shall also verify that sufficient well-trained firefighting resources are available within a reasonable response time to a worst case scenario. The individual may be the qualified individual as defined in § 154.1020 and identified in the response plan or another appropriate individual located at the facility.

**§ 154.1050 Training.**

(a) A response plan submitted to meet the requirements of §§ 154.1035 or 154.1040, as appropriate, must identify the training to be provided to each individual with responsibilities under the plan. A facility owner or operator must identify the method to be used for training any volunteers or casual laborers used during a response to comply with the requirements of 29 CFR 1910.120.

(b) A facility owner or operator shall ensure the maintenance of records sufficient to document training of facility personnel; and shall make them available for inspection upon request by the U.S. Coast Guard. Records for facility personnel must be maintained at the facility for 3 years.

(c) Where applicable, a facility owner or operator shall ensure that an oil spill removal organization identified in a response plan to meet the requirements of this subpart maintains records sufficient to document training for the organization's personnel and shall make them available for inspection upon request by the facility's management personnel, the qualified individual, and U.S. Coast Guard. Records must be maintained for 3 years following completion of training.

(d) The facility owner or operator remains responsible for ensuring that all private response personnel are trained to meet the Occupational Safety and Health Administration (OSHA) standards for emergency response operations in 29 CFR 1910.120.

**§ 154.1055 Exercises.**

(a) A response plan submitted by an owner or operator of an MTR facility must include an exercise program containing both announced and unannounced exercises. The following are the minimum exercise requirements for facilities covered by this subpart:

(1) Qualified individual notification exercises (quarterly).

(2) Spill management team tabletop exercises (annually). In a 3-year period, at least one of these exercises must include a worst case discharge scenario.

(3) Equipment deployment exercises:

(i) Semiannually for facility owned and operated equipment.

(ii) Annually for oil spill removal organization equipment.

(4) Emergency procedures exercises (optional).

(5) Annually, at least one of the exercises listed in § 154.1055(a)(2) through (4) must be unannounced. Unannounced means the personnel participating in the exercise must not be advised in advance, of the exact date, time and scenario of the exercise.

(6) The facility owner or operator shall design the exercise program so that all components of the response plan are exercised at least once every 3 years. All of the components do not have to be exercised at one time; they may be exercised over the 3-year period through the required exercises or through an Area exercise.

(b) A facility owner or operator shall participate in unannounced exercises, as directed by the COTP. The objectives of the unannounced exercises will be to test notifications and equipment deployment for response to the average most probable discharge. After participating in an unannounced exercise directed by a COTP, the owner or operator will not be required to participate in another COTP initiated unannounced exercise for at least 3 years from the date of the exercise.

(c) A facility owner or operator shall participate in Area exercises as directed by the applicable On-Scene Coordinator. The Area exercises will involve equipment deployment to respond to the spill scenario developed by the Exercise Design Team, of which the facility owner or operator will be a member. After participating in an Area exercise, a facility owner or operator will not be required to participate in another Area exercise for at least 6 years.

(d) The facility owner or operator shall ensure that adequate records of all required exercises are maintained at the facility for 3 years. Records shall be made available to the Coast Guard upon request.

(e) The response plan submitted to meet the requirements of this subpart must specify the planned exercise program. The plan must detail the exercise program, including the types of exercises, frequency, scope, objectives

and the scheme for exercising the entire response plan every 3 years.

(f) Compliance with the National Preparedness for Response Exercise Program (PREP) Guidelines will satisfy the facility response plan exercise requirements. These guidelines are available from the TASC DEPT Warehouse, 33141Q 75th Avenue, Landover, MD 20875 (fax: 301–386–5394, stock number USCG–X0241). Compliance with an alternative program that meets the requirements of paragraph (a) of this section and has been approved under § 154.1060 will also satisfy the facility response plan exercise requirements.

NOTE TO PARAGRAPH (f): The PREP guidelines are available online at *http://dmses.dot.gov/docimages/pdf1a/198001__web.pdf.*

[CGD 91–036, 61 FR 7917, Feb. 29, 1996, as amended by USCGD–2003–15404, 68 FR 37741, June 25, 2003]

### § 154.1057 Inspection and maintenance of response resources.

(a) A facility owner or operator required to submit a response plan under this part must ensure that—

(1) Containment booms, skimmers, vessels, and other major equipment listed or referenced in the plan are periodically inspected and maintained in good operating condition, in accordance with manufacturer's recommendations, and best commercial practices; and

(2) All inspection and maintenance is documented and that these records are maintained for 3 years.

(b) For equipment which must be inspected and maintained under this section the Coast Guard may—

(1) Verify that the equipment inventories exist as represented;

(2) Verify the existences of records required under this section;

(3) Verify that the records of inspection and maintenance reflect the actual condition of any equipment listed or referenced; and

(4) Inspect and require operational tests of equipment.

(c) This section does not apply to containment booms, skimmers, vessels, and other major equipment listed or referenced in the plan and ensured available from an oil spill removal organization through the written consent required under § 154.1028(a)(5).

### § 154.1060 Submission and approval procedures.

(a) The owner or operator of a facility to which this subpart applies shall submit one copy of a facility response plan meeting the requirements of this subpart to the COTP for initial review and, if appropriate, approval.

(b) The owner or operator of a facility to which this subpart applies shall include a statement certifying that the plan meets the applicable requirements of subparts F, G, H, and I of this part, as appropriate.

(c) For an MTR facility that is located in the inland response zone where the EPA Regional Administrator is the predesignated Federal On-Scene Coordinator, the COTP may consult with the EPA Federal On-Scene Coordinator prior to any final approval.

(d) For an MTR facility identified in § 154.1015(c) of this subpart that is also required to prepare a response plan under 40 CFR part 112, if the COTP determines that the plan meets all applicable requirements and the EPA Regional Administrator raises no objection to the response plan contents, the COTP will notify the facility owner or operator in writing that the plan is approved.

(e) The plan will be valid for a period of up to 5 years. The facility owner or operator must resubmit an updated plan every 5 years as follows:

(1) For facilities identified in only § 154.1015(b) of this subpart, the 5-year period will commence on the date the plan is submitted to the COTP.

(2) For facilities identified in § 154.1015(c) of this subpart, the 5-year period will commence on the date the COTP approves the plan.

(3) All resubmitted response plans shall be accompanied by a cover letter containing a detailed listing of all revisions to the response plan.

(f) For an MTR facility identified in § 154.1015(c)(2) the COTP will notify the facility owner or operator in writing that the plan is approved.

(g) If a COTP determines that a plan does not meet the requirements of this subpart either upon initial submission or upon 5-year resubmission, the COTP will return the plan to the facility

owner or operator along with an explanation of the response plan's deficiencies. The owner or operator must correct any deficiencies in accordance with § 154.1070 and return the plan to the COTP within the time specified by the COTP in the letter describing the deficiencies.

(h) The facility owner or operator and the qualified individual and the alternative qualified individual shall each maintain a copy of the most current response plan submitted to the COTP. One copy must be maintained at the facility in a position where the plan is readily available to persons in charge of conducting transfer operations.

**§ 154.1065 Plan review and revision procedures.**

(a) A facility owner or operator must review his or her response plan(s) annually. This review shall incorporate any revisions to the plan, including listings of fish and wildlife and sensitive environments identified in the ACP in effect 6 months prior to plan review.

(1) For an MTR facility identified in § 154.1015(c) of this subpart as a ''significant and substantial harm facility,'' this review must occur within 1 month of the anniversary date of COTP approval of the plan. For an MTR facility identified in § 154.1015(b) of this subpart, as a ''substantial harm facility'' this review must occur within 1 month of the anniversary date of submission of the plan to the COTP.

(2) The facility owner or operator shall submit any revision(s) to the response plan to the COTP and all other holders of the response plan for information or approval, as appropriate.

(i) Along with the revisions, the facility owner or operator shall submit a cover letter containing a detailed listing of all revisions to the response plan.

(ii) If no revisions are required, the facility owner or operator shall indicate the completion of the annual review on the record of changes page.

(iii) The COTP will review the revision(s) submitted by the owner or operator and will give written notice to the owner or operator of any COTP objection(s) to the proposed revisions within 30 days of the date the revision(s) were submitted to the COTP. The revisions shall become effective not later than 30 days from their submission to the COTP unless the COTP indicates otherwise in writing as provided in this paragraph. If the COTP indicates that the revision(s) need to be modified before implementation, the owner or operator will modify the revision(s) within the time period set by the COTP.

(3) Any required revisions must be entered in the plan and noted on the record of changes page.

(b) The facility owner or operator shall submit revisions to a previously submitted or approved plan to the COTP and all other holders of the response plan for information or approval within 30 days, whenever there is—

(1) A change in the facility's configuration that significantly affects the information included in the response plan;

(2) A change in the type of oil (petroleum oil group) handled, stored, or transported that affects the required response resources;

(3) A change in the name(s) or capabilities of the oil spill removal organization required by § 154.1045;

(4) A change in the facility's emergency response procedures;

(5) A change in the facility's operating area that includes ports or geographic area(s) not covered by the previously approved plan. A facility may not operate in an area not covered in a plan previously submitted or approved, as appropriate, unless the revised plan is approved or interim operating approval is received under § 154.1025; or

(6) Any other changes that significantly affect the implementation of the plan.

(c) Except as required in paragraph (b) of this section, revisions to personnel and telephone number lists included in the response plan do not require COTP approval. The COTP and all other holders of the response plan shall be advised of these revisions and provided a copy of the revisions as they occur.

(d) The COTP may require a facility owner or operator to revise a response plan at any time as a result of a compliance inspection if the COTP determines that the response plan does not meet the requirements of this subpart

or as a result of inadequacies noted in the response plan during an actual pollution incident at the facility.

(e) If required by §§ 154.1035(b)(3) or 154.1045, a new or existing facility owner or operator must submit the required dispersant and aerial oil tracking resource revisions to a previously submitted or approved plan, made pursuant to §§ 154.1035(b)(3) or 154.1045, to the COTP and all other holders of the response plan for information or approval no later than February 22, 2011.

[CGD 91–036, 61 FR 7917, Feb. 29, 1996, as amended by USCG–2001–8661, 74 FR 45025, Aug. 31, 2009]

### § 154.1070 Deficiencies.

(a) The cognizant COTP will notify the facility owner or operator in writing of any deficiencies noted during review of a response plan, drills observed by the Coast Guard, or inspection of equipment or records maintained in connection with this subpart.

(b) Deficiencies shall be corrected within the time period specified in the written notice provided by the COTP. The facility owner or operator who disagrees with a deficiency issued by the COTP may appeal the deficiency to the cognizant COTP within 7 days or the time specified by the COTP to correct the deficiency, whichever is less. This time commences from the date of receipt of the COTP notice. The owner or operator may request a stay from the COTP decision pending appeal in accordance with § 154.1075.

(c) If the facility owner or operator fails to correct any deficiencies or submit a written appeal, the COTP may invoke the provisions of § 154.1025 prohibiting the facility from storing, handling, or transporting oil.

### § 154.1075 Appeal process.

(a) Any owner or operator of a facility who desires to appeal the classification that a facility could reasonably be expected to cause substantial harm or significant and substantial harm to the environment, shall submit a written request to the cognizant COTP requesting review and reclassification by the COTP. The facility owner or operator shall identify those factors to be considered by the COTP. The factors to be considered by the COTP regarding reclassification of a facility include, but are not limited to, those listed in § 154.1016(b). After considering all relevant material presented by the facility owner or operator and any additional material available to the COTP, the COTP will notify the facility owner or operator of the decision on the reclassification of the facility.

(b) Any facility owner or operator directly affected by an initial determination or action of the COTP may submit a written request to the cognizant COTP requesting review and reconsideration of the COTP's decision or action. The facility owner or operator shall identify those factors to be considered by the COTP in making his or her decision on reconsideration.

(c) Within 10 days of the COTP's decision under paragraph (b) of this section, the facility owner or operator may appeal the decision of the COTP to the District Commander. This appeal shall be made in writing via the cognizant COTP to the District Commander of the district in which the office of the COTP is located.

(d) Within 30 days of the District Commander's decision, the facility owner or operator may formally appeal the decision of the District Commander. This appeal shall be submitted in writing to Commandant (CG–535) via the District Commander.

(e) When considering an appeal, the COTP, District Commander, or Commandant may stay the effect of the decision or action being appealed pending the determination of the appeal.

[CGD 91–036, 61 FR 7930, Feb. 29, 1996, as amended by CGD 96–026, 61 FR 33666, June 28, 1996; USCG–2010–0351, 75 FR 36284, June 25, 2010]

## Subpart G—Additional Response Plan Requirements for a Trans-Alaska Pipeline Authorization Act (TAPAA) Facility Operating in Prince William Sound, Alaska

SOURCE: CGD 91–036, 61 FR 7930, Feb. 29, 1996, unless otherwise noted.

### § 154.1110 Purpose and applicability.

(a) This subpart establishes oil spill response planning requirements for a

facility permitted under the Tans-Alaska Pipeline Authorization Act (TAPAA), in addition to the requirements of subpart F of this part. The requirements of this subpart are intended for use in developing response plans and identifying response resources during the planning process. They are not performance standards.

(b) The information required by this subpart must be included in the Prince William Sound facility-specific appendix to the facility response plan required by subpart F of this part.

### § 154.1115 Definitions.

In addition to the definitions in this section, the definitions in §§ 154.105 and 154.1020 apply to this subpart. As used in this subpart—

*Crude oil* means any liquid hydrocarbon mixture occurring naturally in the earth, whether or not treated to render it suitable for transportation, and includes crude oil from which certain distillate fractions may have been removed, and crude oil to which certain distillate fractions may have been added.

*Non-crude oil* means any oil other than crude oil.

*Prince William Sound* means all State and Federal waters within Prince William Sound, Alaska, including the approach to Hinchinbrook Entrance out to and encompassing Seal Rocks.

### § 154.1120 Operating restrictions and interim operating authorization.

(a) The owner or operator of a TAPAA facility may not operate in Prince William Sound, Alaska, unless the requirements of this subpart as well as § 154.1025 have been met. The owner or operator of a TAPAA facility shall certify to the COTP that he or she has provided, through an oil spill removal organization required by § 154.1125, the necessary response resources to remove, to the maximum extend practicable, a worst case discharge or a discharge of 200,000 barrels of oil, whichever is grater, in Prince William Sound.

(b) Coast Guard approval of a TAPAA facility response plan is effective only so long as the appropriate Regional Citizens Advisory Council(s) is funded pursuant to the requirements of section 5002(k) of the Oil Pollution Act of 1990 (Pub. L. 101–380; 104 Stat. 484, 550).

### § 154.1125 Additional response plan requirements.

(a) The owner or operator of a TAPAA facility shall include the following information in the Prince William Sound appendix to the response plan required by subpart F of this part:

(1) *Oil spill removal organization.* Identification of an oil spill removal organization that shall—

(i) Perform response activities;

(ii) Provide oil spill removal and containment training, including training in the operation of prepositioned equipment for personnel, including local residents and fishermen, from the following locations in Prince William Sound:

(A) Valdez;

(B) Tatitlek;

(C) Cordova;

(D) Whittier;

(E) Chenega; and

(F) Fish hatcheries located at Port San Juan, Main Bay, Esther Island, Cannery Creek, and Solomon Gulch.

(iii) Provide a plan for training, in addition to the personnel listed in paragraph (a)(1)(ii) of this section, sufficient numbers of trained personnel to remove, to the maximum extent practicable, a worst case discharge; and

(iv) Address the responsibilities required in § 154.1035(b)(3)(iii).

(2) *Exercises.* Identification of exercise procedures that must—

(i) Provide for two exercises of the oil spill removal organization each year that test the ability of the prepositioned equipment and trained personnel required under this subpart to perform effectively;

(ii) Consist of both announced and unannounced drills; and

(iii) Include design(s) for exercises that test either the entire appendix or individual components(s).

(3) *Testing, inspection, and certification.* Identification of a testing, inspecting, and certification program for the prepositioned response equipment required in § 154.1130 that must provide for—

(i) Annual testing and equipment inspection in accordance with the manufacturer's recommended procedures, to include—

(A) Start-up and running under load all electrical motors, pumps, power packs, air compressors, internal combustion engines, and oil recovery devices; and

(B) Removal for inspection of no less than one-third of required boom from storage annually, such that all boom will have been removed and inspected within a period of 3 years; and

(ii) Records of equipment tests and inspection.

(iii) Use of an independent entity to certify that the equipment is on-site and in good operating condition and that required tests and inspection have been preformed. The independent entity must have appropriate training and expertise to provide this certification.

(4) *Prepositioned response equipment.* Identification and location of the prepositioned response equipment required in § 154.1130 including the make, model, and effective daily recovery rate of each oil recovery resource.

(b) The owner or operator of a TAPAA facility shall submit to the COTP a schedule for the training and drills required by the geographic-specific appendix for Prince William Sound for the following calendar year.

(c) All records required by this section must be available for inspection by the COTP.

### § 154.1130 Requirements for prepositioned response equipment.

The owner or operator of a TAPAA facility shall provide the following prepositioned response equipment, located within Prince William Sound, in addition to that required by §§ 154.1035, 154.1045, or 154.1050:

(a) On-water recovery equipment with a minimum effective daily recovery rate of 30,000 barrels capable of being a scene within 2 hours of notification of a discharge.

(b) On-water storage capacity of 100,000 barrels for recovered oily material capable of being on scene within 2 hours of notification of a discharge.

(c) On-water recovery equipment with a minimum effective daily recovery rate of 40,000 barrels capable of being on scene within 18 hours of notification of discharge.

(d) On-water storage capacity of 300,000 barrels for recovered oily material capable of being on scene within 12 hours of notification of a discharge.

(e) On-water recovery devices and storage equipment located in communities at strategic locations.

(f) Equipment as identified below, for the locations identified in § 154.1125(a)(1)(ii) sufficient for the protection of the environment in these locations:

(1) Boom appropriate for the specific locations.

(2) Sufficient boats to deploy boom and sorbents.

(3) Sorbent materials.

(4) Personnel protective clothing and equipment.

(5) Survival equipment.

(6) First aid supplies.

(7) Buckets, shovels, and various other tools.

(8) Decontamination equipment.

(9) Shoreline cleanup equipment.

(10) Mooring equipment.

(11) Anchored buoys at appropriate locations to facilitate the positioning of defensive boom.

(12) Other appropriate removal equipment for the protection of the environment as identified by the COTP.

### § 154.1135 Response plan development and evaluation criteria.

The following response times must be used in determining the on scene arrival time in Prince William Sound for the response resources required by § 154.1045:

| | Tier 1 (hrs.) | Tier 2 (hrs.) | tier 3 (hrs.) |
|---|---|---|---|
| Prince William Sound Area ..... | 12 | 24 | 36 |

### § 154.1140 TAPAA facility contracting with a vessel.

The owner or operator of a TAPAA facility may contract with a vessel owner or operator to meet some of all of the requirements of subpart G of part 155 of this chapter. The extent to which these requirements are met by the contractual arrangement will be determined by the COTP.

## Subpart H—Response Plans for Animal Fats and Vegetable Oils Facilities

SOURCE: CGD 91–036, 61 FR 7931, Feb. 29, 1996, unless otherwise noted.

### § 154.1210 Purpose and applicability.

(a) The requirements of this subpart are intended for use in developing response plans and identifying response resources during the planning process. They are not performance standards.

(b) This subpart establishes oil spill response planning requirements for an owner or operator of a facility that handles, stores, or transports animal fats or vegetable oils including—

(1) A fixed MTR facility capable of transferring oil in bulk, to or from a vessel with a capacity of 250 barrels or more; and

(2) A mobile MTR facility used or intended to be used to transfer oil to or from a vessel with a capacity of 250 barrels or more.

[USCG–1999–5149, 65 FR 40825, June 30, 2000]

### § 154.1216 Facility classification.

(a) The Coast Guard classifies facilities that handle, store, or transport animal fats or vegetable oils as ''substantial harm'' facilities because they may cause substantial harm to the environment by discharging oil.

(b) The COTP may change the classification of a facility that handles, stores, or transports animal fats or vegetable oils. The COTP may consider the following factors, and any other relevant factors, before changing the classification of a facility:

(1) The type and quantity of oils handled.

(2) The spill history of the facility.

(3) The age of the facility.

(4) The public and commercial water supply intakes near the facility.

(5) The navigable waters near the facility. *Navigable waters* is defined in 33 CFR part 2.36.

(6) The fish, wildlife, and sensitive environments near the facility.

[USCG–1999–5149, 65 FR 40825, June 30, 2000, as amended by USCG–2008–0179, 73 FR 35014, June 19, 2008]

### § 154.1220 Response plan submission requirements.

(a) The owner or operator of an MTR facility identified in § 154.1216 as a substantial harm facility, shall prepare and submit to the cognizant COTP a response plan that complies with this subpart and all sections of subpart F of this part, as appropriate, except §§ 154.1015, 154.1016, 154.1017, 154.1028, 154.1045 and 154.1047.

(b) The owner or operator of an MTR facility classified by the COTP under § 154.1216(b) as a significant and substantial harm facility, shall prepare and submit for review and approval of the cognizant COTP a response plan that complies with this subpart and all sections of subpart F of this part, as appropriate, except §§ 154.1015, 154.1016, 154.1017, 154.1028, 154.1045 and 154.1047.

(c) In addition to the requirements in paragraph (a) of this section, the response plan for a mobile MTR facility must meet the requirements of § 154.1041 subpart F.

[USCG–1999–5149, 65 FR 40825, June 30, 2000]

### § 154.1225 Specific response plan development and evaluation criteria and other requirements for fixed facilities that handle, store, or transport animal fats or vegetable oils.

(a) The owner or operator of a fixed facility that handles, stores, or transports animal fats or vegetable oils must include information in the response plan that identifies—

(1) The procedures and strategies for responding to a worst case discharge and to an average most probable discharge of an animal fat or vegetable oil to the maximum extent practicable; and

(2) Sources of the equipment and supplies necessary to locate, recover, and mitigate such a discharge.

(b) The owner or operator of a fixed facility must ensure the equipment listed in the response plan will operate in the geographic area(s) where the facility operates. To determine if the equipment will operate, the owner or operator must—

(1) Use the criteria in Table 1 and Section 2 of appendix C of this part; and

(2) Consider the limitations in the area contingency plan for the COTP

zone where the facility is located, including

(i) Ice conditions;

(ii) Debris;

(iii) Temperature ranges; and

(iv) Weather-related visibility.

(c) The owner or operator of a facility that handles, stores, or transports animal fats or vegetable oils must name the personnel and list the equipment, including those that are specified in § 154.1240, that are available by contract or by a method described in § 154.1228(a). The owner or operator is not required, but may at their option, refer to the tables in Environmental Protection Agency regulations, 40 CFR 112, Appendix E, Section 10.0, Tables 6 and 7, to determine necessary response resources.

(d) The owner or operator of a facility that handles, stores, or transports animal fats or vegetable oils must ensure that the response resources in paragraph (c) of this section are able to effectively respond to an incident within the amount of time indicated in the following table, unless otherwise specified in § 154.1240:

| | Tier 1 (hrs.) | Tier 2 | Tier 3 |
|---|---|---|---|
| Higher volume port area. | 6 | N/A | N/A. |
| Great Lakes ..... | 12 | N/A | N/A. |
| All other river and canal, inland, near-shore, and offshore areas. | 12 | N/A | N/A. |

(e) The owner or operator of a facility that handles, stores, or transports animal fats or vegetable oils must—

(1) List in the plan the personnel and equipment that the owner or operator will use to fight fires.

(2) If there is not enough equipment or personnel located at the facility, arrange by contract or a method described in § 154.1228(a), or through a cooperative agreement with public firefighting resources, to have the necessary personnel and equipment available to fight fires.

(3) Identify an individual located at the facility who will work with the fire department on fires, involving an animal fat or vegetable oil. The individual—

(i) Verifies that there are enough trained personnel and operating equipment within a reasonable distance to the incident to fight fires.

(ii) Can be the qualified individual defined in § 154.1020 or an appropriate individual located at the facility.

(f) For a fixed facility, except for facilities that are part of a non-transportation-related fixed onshore facility with a storage capacity of less than 42,000 gallons, the owner or operator must also ensure and identify, through contract or a method described in § 154.1228, response resources for an average most probable discharge, including—

(1) At least 1,000 feet of containment boom or two times the length of the longest vessel that regularly conducts operations at the facility, whichever is greater, and the means of deploying and anchoring the boom within 1 hour of the discovery of an incident. Based on site-specific or facility-specific information, the COTP may require the facility owner or operator to make available additional quantities of containment boom within 1 hour of an incident;

(2) Adequate sorbent material located at the facility;

(3) Oil recovery devices and recovered oil storage capacity capable of being at the incident's site within 2 hours of the discovery of an incident; and

(4) Other appropriate equipment necessary to respond to an incident involving the type of oil handled.

(g) For a mobile facility or a fixed facility that is part of a non-transportation-related onshore facility with a storage capacity of less than 42,000 gallons, the owner or operator must meet the requirements of § 154.1041, and ensure and identify, through contract or a method described in § 154.1228, response resources for an average most probable discharge, including—

(1) At least 200 feet of containment boom and the means of deploying and anchoring the boom within 1 hour of the discovery of an incident. Based on site-specific or facility-specific information, the COTP may require the facility owner or operator to make available additional quantities of containment boom within 1 hour of the discovery of an incident;

(2) Adequate sorbent material capable of being at the site of an incident within 1 hour of its discovery;

(3) Oil recovery devices and recovered oil storage capacity capable of being at incident's site within 2 hours of the discovery of an incident; and

(4) Other equipment necessary to respond to an incident involving the type of oil handled.

(h) The response plan for a facility that is located in any environment with year-round preapproval for use of dispersants and that handles, stores, or transports animal fats and vegetables oils may request a credit for up to 25 percent of the worst case planning volume set forth by subpart F of this part. To receive this credit, the facility owner or operator must identify in the plan and ensure, by contract or other approved means as described in § 154.1228(a), the availability of specified resources to apply the dispersants and to monitor their effectiveness. The extent of the credit for dispersants will be based on the volumes of the dispersants available to sustain operations at the manufacturers' recommended dosage rates. Other spill mitigation techniques, including mechanical dispersal, may be identified in the response plan provided they are in accordance with the NCP and the applicable ACP. Resources identified for plan credit should be capable of being on scene within 12 hours of a discovery of a discharge. Identification of these resources does not imply that they will be authorized for use. Actual authorization for use during a spill response will be governed by the provisions of the NCP and the applicable ACP.

[CGD 91–036, 61 FR 7931, Feb. 29, 1996, as amended by USCG–1999–5149, 65 FR 40826, June 30, 2000]

### § 154.1228 Methods of ensuring the availability of response resources by contract or other approved means.

(a) When required in this subpart, the availability of response resources must be ensured by the following methods:

(1) The identification of an oil spill removal organization with specified equipment and personnel available within stipulated response times in specified geographic areas. The organization must provide written consent to being identified in the plan;

(2) A document which—

(i) Identifies the personnel, equipment, and services capable of being provided by the oil spill removal organization within stipulated response times in the specified geographic areas;

(ii) Sets out the parties' acknowledgment that the oil spill removal organization intends to commit the resources in the event of a response;

(iii) Permits the Coast Guard to verify the availability of the identified response resources through tests, inspections, and drills;

(iv) Is referenced in the response plan;

(3) Active membership in a local or regional oil spill removal organization that has identified specified personnel and equipment required under this subpart that are available to response to a discharge within stipulated response times in the specified geographic areas;

(4) Certification by the facility owner or operator that specified personnel and equipment required under this subpart are owned, operated, or under the direct control of the facility owner or operator, and are available within stipulated response times in the specified geographic areas; or

(5) A written contractual agreement with an oil spill removal organization. The agreement must identify and ensure the availability of specified personnel and equipment required under this subpart within stipulated response times in the specified geographic areas.

(b) The contracts and documents required in paragraph (a) of this section must be retained at the facility and must be produced for review upon request by the COTP.

### § 154.1240 Specific requirements for animal fats and vegetable oils facilities that could reasonably be expected to cause substantial harm to the environment.

(a) The owner or operator of a facility, classified under § 154.1216 as a facility that could reasonably be expected to cause substantial harm to the environment, must submit a response plan that meets the requirements of § 154.1035, except as modified by this section.

(b) The plan does not need to list the facility or corporate organizational structure that the owner or operator will use to manage the response, as required by § 154.1035(b)(3)(iii).

(c) The owner or operator must ensure and identify, by contract or a method described in § 154.1228, that the response resources required under § 154.1035(b)(3)(iv) are available for a worst case discharge.

[USCG–1999–5149, 65 FR 40827, June 30, 2000]

## Subpart I—Response Plans for Other Non-Petroleum Oil Facilities

SOURCE: CGD 91–036, 61 FR 7932, Feb. 29, 1996, unless otherwise noted.

### § 154.1310 Purpose and applicability.

This subpart establishes oil spill response planning requirements for an owner or operator of a facility that handles, stores, or transports other non-petroleum oils. The requirements of this subpart are intended for use in developing response plans and identifying response resources during the planning process. They are not performance standards.

### § 154.1320 Response plan submission requirements.

An owner or operator of a facility that handles, stores, or transports other non-petroleum oils shall submit a response plan in accordance with the requirements of this subpart, and with all sections of subpart F of this part, except §§ 154.1045 and 154.1047, which apply to petroleum oils.

### § 154.1325 Response plan development and evaluation criteria for facilities that handle, store, or transport other non-petroleum oils.

(a) An owner or operator of a facility that handles, stores, or transports other non-petroleum oils must provide information in his or her plan that identifies—

(1) Procedures and strategies for responding to a worst case discharge of other non-petroleum oils to the maximum extent practicable; and

(2) Sources of the equipment and supplies necessary to locate, recover, and mitigate such a discharge.

(b) An owner or operator of a facility that handles, stores, or transports other non-petroleum oils must ensure that any equipment identified in a response plan is capable of operating in the conditions expected in the geographic area(s) in which the facility operates using the criteria in Table 1 of appendix C of this part. When evaluating the operability of equipment, the facility owner or operator must consider limitations that are identified in the ACPs for the COTP zone in which the facility is located, including—

(1) Ice conditions;

(2) Debris;

(3) Temperature ranges; and

(4) Weather-related visibility.

(c) The owner or operator of a facility that handles, stores, or transports other non-petroleum oils must identify the response resources that are available by contract or other approved means as described in § 154.1028(a). The equipment identified in a response plan must include—

(1) Containment boom, sorbent boom, or other methods for containing oil floating on the surface or to protect shorelines from impact;

(2) Oil recovery devices appropriate for the type of other non-petroleum oils handled; and

(3) Other appropriate equipment necessary to respond to a discharge involving the type of oil handled.

(d) Response resources identified in a response plan under paragraph (c) of this section must be capable of commencing an effective on-scene response within the times specified in this paragraph for the applicable operating area:

| | Tier 1 (hrs.) | Tier 2 | Tier 3 |
|---|---|---|---|
| Higher volume port area | 6 | N/A | N/A |
| Great Lakes | 12 | N/A | N/A |
| All other river and canal, inland, near-shore, and offshore areas | 12 | N/A | N/A |

(e) A response plan for a facility that handles, stores, or transports other non-petroleum oils must identify response resources with firefighting capability. The owner or operator of a facility that does not have adequate firefighting resources located at the facility or that cannot rely on sufficient local firefighting resources must identify and ensure, by contract or other

approved means as described in §154.1028(a), the availability of adequate firefighting resources. The response plan must also identify an individual located at the facility to work with the fire department on other non-petroleum oil fires. This individual shall also verify that sufficient well-trained firefighting resources are available within a reasonable response time to a worst case scenario. The individual may be the qualified individual as defined in §154.1020 and identified in the response plan or another appropriate individual located at the facility.

(f) The response plan for a facility that is located in any environment with year-round preapproval for use of dispersants and that handles, stores, or transports other non-petroleum oils may request a credit for up to 25 percent of the worst case planning volume set forth by subpart F of this part. To receive this credit, the facility owner or operator must identify in the plan and ensure, by contract or other approved means as described in §154.1028(a), the availability of specified resources to apply the dispersants and to monitor their effectiveness. The extent of the credit will be based on the volumes of the dispersant available to sustain operations at the manufacturers' recommended dosage rates. Identification of these resources does not imply that they will be authorized for use. Actual authorization for use during a spill response will be governed by the provisions of the NCP and the applicable ACP.

## APPENDIX A TO PART 154—GUIDELINES FOR DETONATION FLAME ARRESTERS

This appendix contains the draft ASTM standard for detonation flame arresters. Devices meeting this standard will be accepted by the Commandant (CG–522).

1. *Scope*

1.1 This standard provides the minimum requirements for design, construction, performance and testing of detonation flame arresters.

2. *Intent*

2.1 This standard is intended for detonation flame arresters protecting systems containing vapors of flammable or combustible liquids where vapor temperatures do not exceed 60 °C. For all tests, the test media defined in 14.1.1 can be used except where detonation flame arresters protect systems handling vapors with a maximum experimental safe gap (MESG) below 0.9 millimeters. Detonation flame arresters protecting such systems must be tested with appropriate media (the same vapor or a media having a MESG no greater than the vapor). Various gases and their respective MESG are listed in attachment 1.

2.2 The tests in this standard are intended to qualify detonation flame arresters for all in-line applications independent of piping configuration provided the operating pressure is equal to or less than the maximum operating pressure limit specified in the manufacturer's certification and the diameter of the piping system in which the detonation arrester is to be installed is equal to or less than the piping diameter used in the testing.

NOTE: Detonation flame arresters meeting this standard as Type I devices, which are certified to be effective below 0 °C and which can sustain three stable detonations without being damaged or permanently deformed, also comply with the minimum requirements of the International Maritime Organization, Maritime Safety Committee Circular No. 373 (MSC/Circ. 373/Rev.1).

3. *Applicable Documents*

3.1 ASTM Standards[1]

A395 Ferritic Ductile Iron Pressure-Retaining Castings For Use At Elevated Temperatures.

F722 Welded Joints for Shipboard Piping Systems

F1155 Standard Practice for Selection and Application of Piping System Materials

3.2 ANSI Standards[2]

B16.5 Pipe Flanges and Flanged Fittings.

3.3 Other Documents

3.3.1 ASME Boiler and Pressure Vessel Code[2]

Section VIII, Division 1, Pressure Vessels

Section IX, Welding and Brazing Qualifications.

3.3.2 International Maritime Organization, Maritime Safety Committee[3]

MSC/Circ. 373/Rev. 1—Revised Standards for the Design, Testing and Locating of Devices to Prevent the Passage of Flame into Cargo Tanks in Tankers.

3.3.3 International Electrotechnical Commission[4]

Publication 79–1—Electrical Apparatus for Explosive Gas Atmospheres.

4. *Terminology*

4.1 $\Delta P/P_o$—The dimensionless ratio, for any deflagration and detonation test of 14.3, of the maximum pressure increase (the maximum pressure minus the initial pressure), as measured in the piping system on the side

[1] Footnotes appear at the end of this article.

of the arrester where ignition begins by the device described in paragraph 14.3.3, to the initial absolute pressure in the piping system. The initial pressure should be greater than or equal to the maximum operating pressure specified in paragraph 11.1.7.

4.2 Deflagration—A combustion wave that propagates subsonically (as measured at the pressure and temperature of the flame front) by the transfer of heat and active chemical species to the unburned gas ahead of the flame front.

4.3 Detonation—A reaction in a combustion wave propagating at sonic or supersonic (as measured at the pressure and temperature of the flame front) velocity. A detonation is stable when it has a velocity equal to the speed of sound in the burnt gas or may be unstable (overdriven) with a higher velocity and pressure.

4.4 Detonation flame arrester—A device which prevents the transmission of a detonation and a deflagration.

4.5 Flame speed—The speed at which a flame propagates along a pipe or other system.

4.6 Flame Passage—The transmission of a flame through a device.

4.7 Gasoline Vapors—A non-leaded petroleum distillate consisting essentially of aliphatic hydrocarbon compounds with a boiling range approximating 65 °C/75 °C.

5. *Classification*

5.1 The two types of detonation flame arresters covered in this specification are classified as follows:

5.1.1 Type I—Detonation flame arresters acceptable for applications where stationary flames may rest on the device.

5.1.2 Type II—Detonation flame arresters acceptable for applications where stationary flames are unlikely to rest on the device, and further methods are provided to prevent flame passage when a stationary flame occurs. One example of ''further methods'' is a temperature monitor and an automatic shutoff valve.

6. *Ordering Information*

6.1 Orders for detonation flame arresters under this specification shall include the following information as applicable:

6.1.1 Type (I or II).

6.1.2 Nominal pipe size.

6 1.3 Each gas or vapor in the system and the corresponding MESG.

6.1.4 Inspection and tests other than specified by this standard.

6.1.5 Anticipated ambient air temperature range.

6.1.6 Purchaser's inspection requirements (see section 10.1).

6.1.7 Description of installation.

6.1.8 Materials of construction (see section 7).

6.1.9 Maximum flow rate and the maximum design pressure drop for that maximum flow rate.

6.1.10 Maximum operating pressure.

7. *Materials*

7.1 The detonation flame arrester housing, and other parts or bolting used for pressure retention, shall be constructed of materials listed in ASTM F 1155 (incorporated by reference, see §154.106), or section VIII, Division 1 of the ASME Boiler and Pressure Vessel Code. Cast and malleable iron shall not be used; however, ductile cast iron in accordance with ASTM A395 may be used.

7.1.1 Arresters, elements, gaskets, and seals must be made of materials resistant to attack by seawater and the liquids and vapors contained in the system being protected (see section 6.1.3).

7.2 Nonmetallic materials, other than gaskets and seals, shall not be used in the construction of pressure retaining components of the detonation flame arrester.

7.2.1 Nonmetallic gaskets and seals shall be non-combustible and suitable for the service intended.

7.3 Bolting materials, other than that of section 7.1, shall be at least equal to those listed in Table 1 of ANSI B16.5.

7.4 The possibility of galvanic corrosion shall be considered in the selection of materials.

7.5 All other parts shall be constructed of materials suitable for the service intended.

8. *Other Requirements*

8.1 Detonation flame arrester housings shall be gas tight to prevent the escape of vapors.

8.2 Detonation flame arrester elements shall fit in the housing in a manner that will insure tightness of metal-to-metal contacts in such a way that flame cannot pass between the element and the housing.

8.2.1 The net free area through detonation flame arrester elements shall be at least 1.5 times the cross-sectional area of the arrester inlet.

8.3 Housings, elements, and seal gasket materials shall be capable of withstanding the maximum and minimum pressures and temperatures to which the device may be exposed under both normal and the specified fire test conditions in section 14, and shall be capable of withstanding the hydrostatic pressure test of section 9.2.3.

8.4 Threaded or flanged pipe connections shall comply with the applicable B16 standards in ASTM F 1155 (incorporated by reference, see §154.106). Welded joints shall comply with ASTM F 722 (incorporated by reference, see §154.106).

8.5 All flat joints of the housing shall be machined true and shall provide for a joint having adequate metal-to-metal contact.

8.6 Where welded construction is used for pressure retaining components, welded joint design details, welding and non-destructive testing shall be in accordance with Section VIII, Division 1, of the ASME Code and ASTM F 722 (incorporated by reference, see

§154.106). Welders and weld procedures shall be qualified in accordance with section IX of the ASME Code.

8.7 The design of detonation flame arresters shall allow for ease of inspection and removal of internal elements for replacement, cleaning or repair without removal of the entire device from the system.

8.8 Detonation flame arresters shall allow for efficient drainage of condensate without impairing their efficiency to prevent the passage of flame. The housing may be fitted with one or more drain plugs for this purpose. The design of a drain plug should be such so that by cursory visual inspection it is obvious whether the drain has been left open.

8.9 All fastenings shall be protected against loosening.

8.10 Detonation flame arresters shall be designed and constructed to minimize the effect of fouling under normal operating conditions.

8.11 Detonation flame arresters shall be capable of operating over the full range of ambient air temperatures anticipated.

8.12 Detonation flame arresters shall be of first class workmanship and free from imperfections which may affect their intended purpose.

8.13 Detonation flame arresters shall be tested in accordance with section 9.

9. *Tests*

9.1 Tests shall be conducted by an independent laboratory capable of performing the tests. The manufacturer, in choosing a laboratory, accepts that it is a qualified independent laboratory by determining that it has (or has access to) the apparatus, facilities, personnel, and calibrated instruments that are necessary to test detonation flame arresters in accordance with this standard.

9.1.1 A test report shall be prepared by the laboratory which shall include:

9.1.1.1 Detailed drawings of the detonation flame arrester and its components (including a parts list identifying the materials of construction).

9.1.1.2 Types of tests conducted and results obtained. This shall include the maximum temperature reached and the length of testing time in section 14.2 in the case of Type II detonation flame arresters.

9.1.1.3 Description of approved attachments (reference 9.2.6).

9.1.1.4 Types of gases or vapors for which the detonation flame arrester is approved.

9.1.1.5 Drawings of the test rig.

9.1.1.6 Record of all markings found on the tested detonation flame arrester.

9.1.1.7 A report number.

9.2 One of each model Type I and Type II detonation flame arrester shall be tested. Where approval of more than one size of a detonation flame arrester model is desired, only the largest and smallest sizes need be tested provided it is demonstrated by calculation and/or other testing that intermediate size devices have equal or greater strength to withstand the force of a detonation and have equivalent detonation arresting characteristics. A change of design, material, or construction which may affect the corrosion resistance, or ability to resist endurance burning, deflagrations or detonations shall be considered a change of model for the purpose of this paragraph.

9.2.1 The detonation flame arrester shall have the same dimensions, configuration, and most unfavorable clearances expected in production units.

9.2.2 A corrosion test shall be conducted. In this test, a complete detonation flame arrester, including a section of pipe similar to that to which it will be fitted, shall be exposed to a 20% sodium chloride solution spray at a temperature of 25 °C for a period of 240 hours, and allowed to dry for 48 hours. Following this exposure, all movable parts shall operate properly and there shall be no corrosion deposits which cannot be washed off.

9.2.3 The detonation flame arrester shall be subjected to a hydrostatic pressure test of at least 350 psig for ten minutes without rupturing, leaking, or showing permanent distortion.

9.2.4 Flow characteristics as declared by the manufacturer, shall be demonstrated by appropriate tests.

9.2.5 Detonation flame arresters shall be tested for endurance burn and deflagration/detonation in accordance with the test procedures in section 14. Type I detonation flame arresters shall show no flame passage when subjected to both tests. Type II detonation flame arresters shall show no evidence of flame passage during the detonation/deflagration tests in section 14.3. Type II detonation flame arresters shall be tested for endurance burn in accordance with section 14.2. From the endurance burn test of a Type II detonation flame arresters, the maximum temperature reached and the test duration shall be recorded and provided as part of the laboratory test report.

9.2.6 Where a detonation flame arrester is provided with cowls, weather hoods and deflectors, etc., it shall be tested in each configuration in which it is provided.

9.2.7 Detonation flame arresters which are provided with a heating arrangement designed to maintain the surface temperature of the device above 85 °C shall pass the required tests at the maximum heated operating temperature.

9.2.8 Each finished detonation arrester shall be pneumatically tested at 10 psig to ensure there are no defects or leakage.

10. *Inspection*

10.1 The manufacturer shall afford the purchaser's inspector all reasonable access necessary to assure that the device is being furnished in accordance with this standard.

All examinations and inspections shall be made at the place of manufacture, unless otherwise agreed upon.

10.2 Each finished detonation arrester shall be visually and dimensionally checked to ensure that the device corresponds to this standard, is certified in accordance with section 11 and is marked in accordance with section 12. Special attention shall be given to the checking of welds and the proper fit-ups of joints (see sections 8.5 and 8.6).

11. *Certification*

11.1 Manufacturer's certification that a detonation flame arrester meets this standard shall be provided in an instruction manual. The manual shall include as applicable:

11.1.1 Installation instructions and a description of all configurations tested (reference paragraph 9.2.6). Installation instructions to include the device's limitations.

11.1.2 Operating instructions.

11.1.3 Maintenance requirements.

11.1.3.1 Instructions on how to determine when arrester cleaning is required and the method of cleaning.

11.1.4 Copy of test report (see section 9.1.1).

11.1.5 Flow test data, maximum temperature and time tested (Type II).

11.1.6 The ambient air temperature range over which the device will effectively prevent the passage of flame.

NOTE: Other factors such as condensation and freezing of vapors should be evaluated at the time of equipment specification.

11.1.7 The maximum operating pressure for which the device is suitable.

12. *Marking*

12.1 Each detonation flame arrester shall be permanently marked indicating:

12.1.1 Manufacturer's name or trademark.

12.1.2 Style, type, model or other manufacturer's designation for the detonation flame arrester.

12.1.3 Size of the inlet and outlet.

12.1.4 Type of device (Type I or II).

12.1.5 Direction of flow through the detonation flame arrester.

12.1.6 Test laboratory and report number.

12.1.7 Lowest MESG of gases that the detonation flame arrester is suitable for.

12.1.8 ASTM designation of this standard.

12.1.9 Ambient air operating temperature range.

12.1.10 Maximum operating pressure.

13. *Quality Assurance*

13.1 Detonation flame arresters shall be designed, manufactured and tested in a manner that ensures they meet the characteristics of the unit tested in accordance with this standard.

13.2 The detonation flame arrester manufacturer shall maintain the quality of the arresters that are designed, tested and marked in accordance with this standard. At no time shall a detonation flame arrester be sold with this standard designation that does not meet the requirements herein.

14. *Test Procedures for Detonation Arresters*

14.1 *Media/Air Mixtures*

14.1.1 For vapors from flammable or combustible liquids with a MESG greater than or equal to 0.9 mm, technical grade hexane or gasoline vapors shall be used for all tests in this section except technical grade propane may be used for the deflagration/detonation tests in section 14.3. For vapors with a MESG less than 0.9 mm, the specific vapor (or alternatively, a media with a MESG less than or equal to the MESG of the vapor) must be used as the test medium in all Section 14 tests.

14.1.2 Hexane, propane, gasoline and other test vapors shall be mixed with air to form the most easily ignitable mixture.[5]

14.2 *Endurance Burn Test Procedure*

14.2.1 An endurance burning test shall be carried out as follows:

14.2.1.1 The test rig shall consist of an apparatus producing an explosive mixture, a small tank with a diaphragm, a prototype of the detonation flame arrester and a firing source in close proximity to the test device (see Figure 1). The detonation flame arrester shall be installed so that the mixture emission is vertically upwards, or installed in the position for which it is designed and which will cause the most severe heating of the device under the prescribed endurance burn conditions. In this position the mixture shall be ignited.

14.2.1.2 Endurance burn test shall start by using the most easily ignitable test vapor/air mixture with the aid of a pilot flame or a spark igniter at the outlet. The flammable mixture may be reignited as necessary in the course of the endurance burn.

14.2.1.3 Temperature measurement will be performed on the surface of the arrester element half way between the center and its edge.

14.2.1.4 By varying the proportions of the flammable mixture and the flow rate, the detonation flame arrester shall be heated by a stable flame on the surface of the arrester until the highest obtainable temperature is reached on the ignited side or until the temperature on the side which was not ignited (protected side) rises 100 °C.

14.2.1.5 The flammable mixture proportions will then be varied again until the conditions which result in the highest temperature on the protected side are achieved. This temperature shall be maintained for a period of ten minutes, after which the flow shall be stopped and the conditions observed. The highest attainable temperature is considered to have been reached when any subsequent rise of temperature does not exceed 0.5 °C per minute over a ten minute period.

14.2.1.6 If difficulty arises in establishing the highest attainable temperature on the protected side, the following criteria shall

apply. When the increase in temperature on the protected side occurs so slowly that its temperature does not rise 100 °C, the conditions which produced the highest temperature on the ignited side of the arrester will be maintained for two hours. For the condition in which the temperature on the protected side continues to rise at a rate in excess of 0.5 °C per minute for a 10 minute period, endurance burning shall be continued, using the most severe conditions of flammable mixtures and flow rate, for a period of two hours. In either of these cases, at the end of the two hour period, the flow shall be stopped and the conditions observed. The two hour interval shall be measured commencing with the setting of the conditions which produced the most severe conditions of mixture and flow rate. For Type I detonation flame arresters, flame passage shall not occur during this test. For Type II detonation flame arresters, the maximum temperature obtained, and the time elapsed from the time when the most severe conditions are set to when flame passage occurs, shall be recorded. However, for Type II detonation flame arresters the test may be terminated 15 minutes after setting the most severe conditions on the protected side.

14.3 *Deflagration/Detonation Test Procedure*

14.3.1 A detonation flame arrester shall be installed at one end of a pipe of the same diameter as the inlet of the detonation flame arrester (see Figure 2). The length and configuration of the test pipe shall develop a stable detonation[6] at the device and shall be capable, by change in its length or configuration, of developing deflagrations and unstable (overdriven) detonations as measured on the side of the pipe where ignition occurs (run-up side). For deflagration testing, two test piping arrangements shall be used on the outlet side of the detonation flame arrester (the side which is not ignited). In both of the following end arrangements, the outlet side pipe diameter shall be equal to that on the run-up side. In one arrangement, the outlet side pipe shall be at least 10 pipe diameters long with a plastic bag over the free end. (Alternate end of pipe closures are also acceptable provided they easily give way during the course of the test, and the closure allows the required gas concentration to be maintained throughout the test piping arrangement.) In the other arrangement the outlet side pipe shall be fitted with a restriction located 0.6 meters from the outlet side arrester flange. The size of the restriction for each nominal size detonation flame arrester shall be as follows:

| Nominal pipe diameter (inches) | Restriction diameter (inches) |
|---|---|
| 3 | ½ |
| 4 | ½ |
| 6 | 1 |
| 8 | 1½ |
| 10 | 1½ |
| 12 | 2 |
| 18 | 2 |
| 24 | 2 |

The entire pipe shall be filled with the most easily ignitable vapor/air mixture to a test pressure corresponding to or greater than the upper limit of the device's maximum operating pressure (see 11.1.7). In order to obtain this test pressure, a device such as a bursting disc may be fitted on the open end of the device in place of the plastic bag. The concentration of the mixture should be verified by appropriate testing of the gas composition. The vapor/air mixture shall then be ignited.

14.3.2 Flame speeds shall be measured by optical devices capable of providing accuracy of ±5%. These devices shall be situated no more than a distance equal to 3% of the length of the run-up pipe apart with one device no more than 8 inches from the end of the test pipe to which the detonation flame arrester is attached. In addition, each outlet arrangement described in paragraph 14.3.1 shall be fitted with an optical device located no more than 8 inches from the detonation flame arrester outlet.[7]

14.3.3 Explosion pressures within the pipe shall be measured by a high frequency transducer situated in the test pipe no more than 8 inches from the run-up side of the housing of the detonation flame arrester.

14.3.4 Using the first end arrangement (10 pipe diameter outlet) described in paragraph 14.3.1, a series of tests shall be conducted to determine the test pipe length and configuration that results in the maximum unstable (overdriven) detonation having the maximum measured flame speed at the detonation flame arrester. (These tests may also be carried out using a single length of pipe with igniters spaced at varying distances from the arrester.) The flame speeds, explosion pressures and test pipe configurations shall be recorded for each of these tests. The piping configuration that resulted in the highest recorded unstable (overdriven) detonation flame speed shall be used, and the device shall be subjected to at least four additional unstable (overdriven) detonations. In the course of testing, the device shall also demonstrate its ability to withstand five stable detonations, five deflagrations (as determined by flame speed) where $\Delta P/P_o$ was less than 1 and five deflagrations (as determined by flame speed) where $\Delta P/P_o$ was greater than 1 but less than 10. Initiation of deflagrations shall be at several locations to generate a range for $\Delta P/P_o$. Deflagration tests using the restricted outlet arrangement described in paragraph 14.3.1 shall then be conducted. In these tests the device shall demonstrate its ability to stop five

deflagrations (as determined by flame speed) generated by the same configurations which resulted in $\Delta P/P_o$ being less than 1 during the deflagration tests which were conducted without the restricted end arrangements, and five deflagrations (as determined by flame speed) generated by the same configurations which resulted in $\Delta P/P_o$ being greater than 1 but less than 10 during the deflagration tests which were conducted without the restricted end arrangements. No evidence of flame passage shall occur during these tests. The flame speeds and explosion pressures for each of these tests shall be recorded.

14.3.5 A device that successfully passes the tests of 14.3.4 shall be considered to be directional (suitable for arresting a detonation advancing only from the direction as tested) except;

14.3.5.1 A device may be tested according to 14.3.4 for detonations approaching from either direction, or

14.3.5.2 The design of the device is symmetrical where each end may be considered to be identical when approached by a detonation from either direction.

[1] Available from the American Society for Testing and Materials (ASTM), 100 Barr Harbor Dr., West Conshohocken, PA 19428–2959.

[2] Available from the American Society of Mechanical Engineers International, Three Park Avenue, New York, NY 10016–5990.

[3] Available from the International Maritime Organization, 4 Albert Embankment, London SE1 7SR, England.

[4] Available from the International Electrotechnical Commission, 1 rue de Varembe, Geneva, Switzerland.

[5] See IEC Publication 79–1.

[6] Some data are available for the estimation of flame speeds in horizontal pipes without detonation flame arresters. Some data indicate that the presence of small obstacles, fittings or bends in the test pipe can accelerate the flame speeds appreciably.

[7] Other pressure and/or flame speed measuring techniques may be used if effective.

FIGURE 1

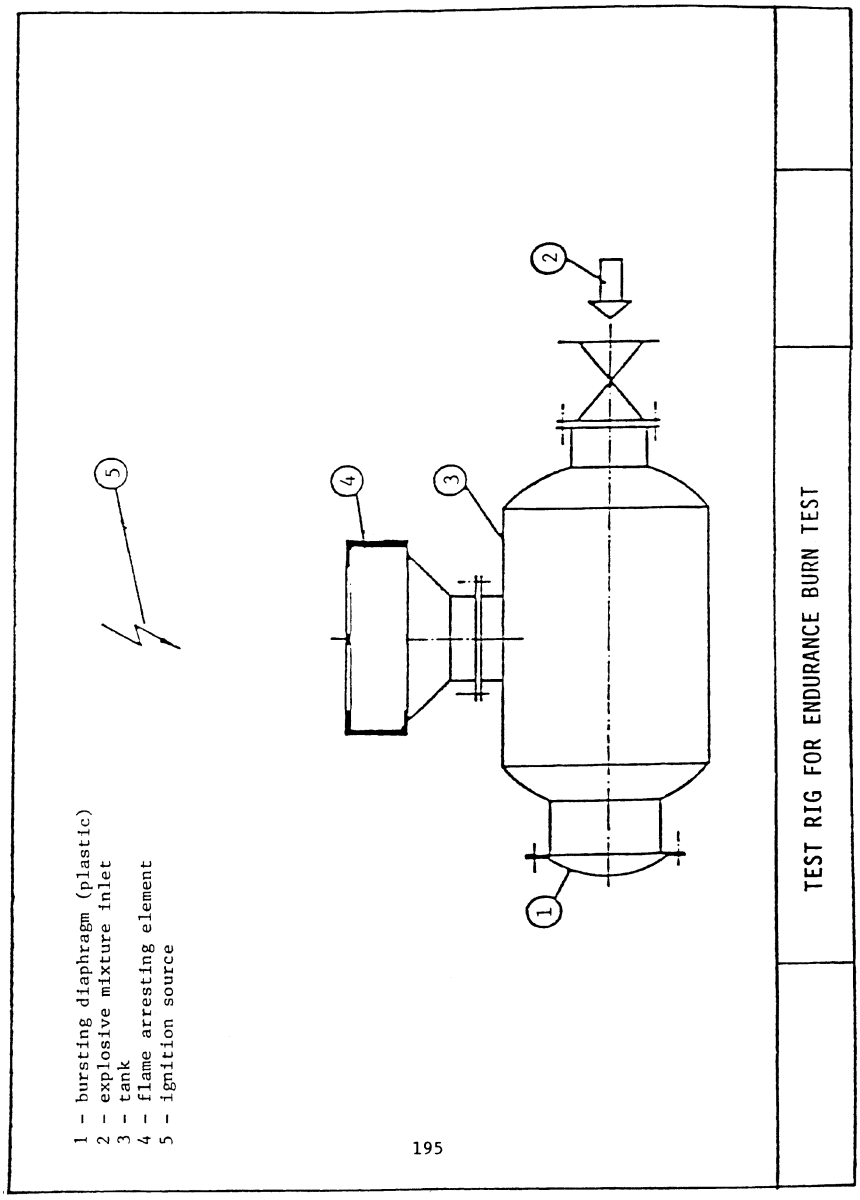
1 - bursting diaphragm (plastic)
2 - explosive mixture inlet
3 - tank
4 - flame arresting element
5 - ignition source
1
2
3
4
5
195
TEST RIG FOR ENDURANCE BURN TEST

Figure 2

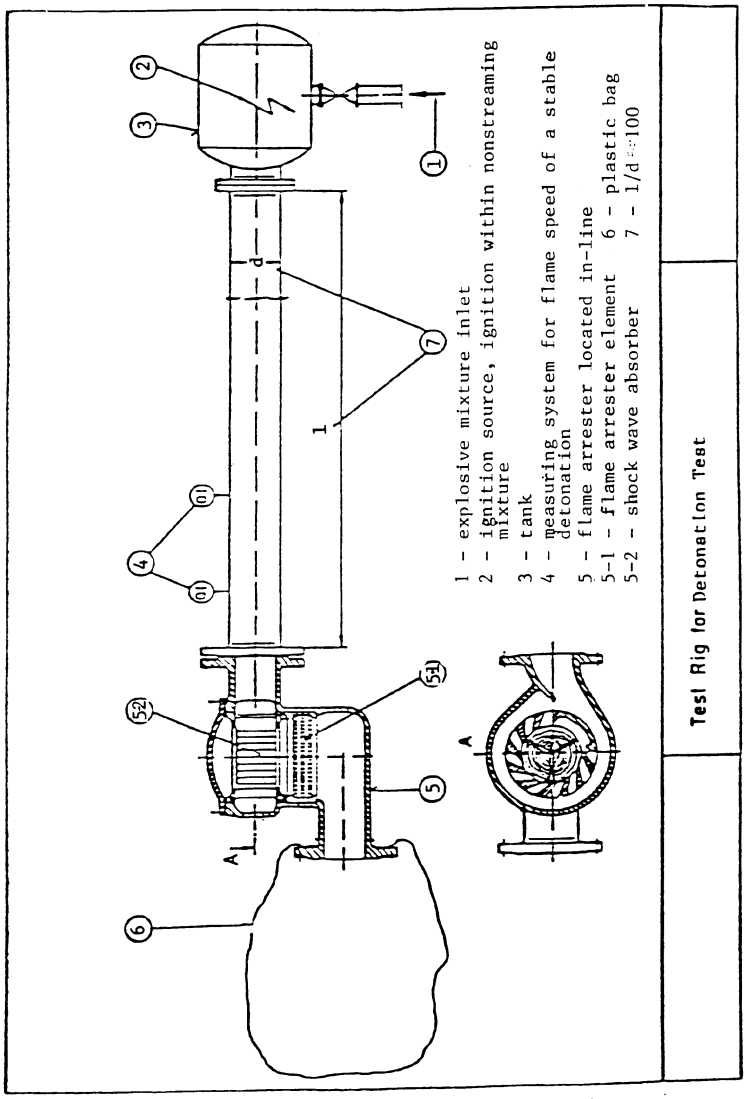
1 - explosive mixture inlet
2 - ignition source, ignition within nonstreaming mixture
3 - tank
4 - measuring system for flame speed of a stable detonation
5 - flame arrester located in-line
5-1 - flame arrester element
5-2 - shock wave absorber
6 - plastic bag
7 - l/d=100
Test Rig for Detonation Test

196

ATTACHMENT 1

| Inflammable gas or vapour | Experimental maximum safe gap | |
|---|---|---|
| | mm | in. |
| Methane | 1.170 | 0.046 |
| Blast furnace gas | 1.193 | 0.047 |
| Propane | 0.965 | 0.038 |
| Butane | 1.066 | 0.042 |
| Pentane | 1.016 | 0.040 |
| Hexane | 0.965 | 0.038 |
| Heptane | 0.965 | 0.038 |
| Iso-octane | 1.040 | 0.041 |
| Decane | 1.016 | 0.040 |
| Benzene | 0.99 | 0.039 |
| Xylene | 1.066 | 0.042 |
| Cyclohexane | 0.94 | 0.037 |
| Acetone | 1.016 | 0.040 |
| Ethylene | 0.71 | 0.028 |
| Methyl-ethyl-ketone | 1.016 | 0.040 |
| Carbon monoxide | 0.915 | 0.036 |
| Methyl-acetate | 0.990 | 0.039 |
| Ethyl-acetate | 1.04 | 0.041 |
| Propyl-acetate | 1.04 | 0.041 |
| Butyl-acetate | 1.016 | 0.040 |
| Amyl-acetate | 0.99 | 0.039 |
| Methyl alcohol | 0.915 | 0.036 |
| Ethyl alcohol | 1.016 | 0.040 |
| Iso-butyl-alcohol | 0.965 | 0.038 |
| Butyl-alcohol (Normal) | 0.94 | 0.037 |
| Amyl-alcohol | 0.99 | 0.039 |
| Ethyl-ether | 0.864 | 0.034 |
| Coal gas ($H_2$ 57%) | 0.482 | 0.019 |
| Acetylene | ≤0.025 | ≤0.001 |
| Carbon disulphide | 0.203 | 0.008 |
| Hydrogen | 0.102 | 0.004 |
| Blue water gas ($H_2$ 53% CO 47%) | 0.203 | 0.008 |
| Ethyl nitrate | ≤0.025 | ≤0.001 |
| Ammonia | [1] 3.33 | [1] 0.133 |
| Ethylene oxide | 0.65 | 0.026 |
| Ethyl nitrite | 0.922 | 0.038 |

[1] Approximately.

[CGD 88–102, 55 FR 25435, June 21, 1990; 55 FR 39270, Sept. 26, 1990, as amended by CGD 96–026, 61 FR 33666, June 28, 1996; USCG–1999–5832, 64 FR 34715, June 29, 1999; USCG–2000–7223, 65 FR 40058, June 29, 2000; USCG–2010–0351, 75 FR 36284, June 25, 2010]

## APPENDIX B TO PART 154—STANDARD SPECIFICATION FOR TANK VENT FLAME ARRESTERS

1. *Scope*

1.1 This standard provides the minimum requirements for design, construction, performance and testing of tank vent flame arresters.

2. *Intent*

2.1 This standard is intended for flame arresters protecting systems containing vapors of flammable or combustible liquids with a flashpoint that does not exceed 60 °C. The test media defined in 14.1.1 can be used except where arresters protect systems handling vapors with a maximum experimental safe gap (MESG) below 0.9 millimeters. Flame arresters protecting such systems must be tested with appropriate media (the same vapor or a media having a MESG no greater than the vapor). Various gases and their respective MESG are listed in Attachment 1.

NOTE: Flame arresters meeting this standard also comply with the minimum requirements of the International Maritime Organization, Maritime Safety Committee Circular No. 373 (MSC/Circ. 373/Rev. 1).

3. *Applicable Documents*

3.1 ASTM Standards[1] F722 Welded Joints for Shipboard Piping Systems; F1155 Standard Practice for Selection and Application of Piping System Materials

3.2 ANSI Standards[2] B16.5 Pipe Flanges and Flanged Fittings.

3.3 Other Documents

3.3.1 ASME Boiler and Pressure Vessel Code[2] section VIII, Division 1, Pressure Vessels; section IX, Welding and Brazing Qualifications.

3.3.2 International Maritime Organization, Maritime Safety Committee[3] MSC/Circ. 373/Rev. 1—Revised Standards for the Design, Testing and Locating of Devices to Prevent the Passage of Flame into Cargo Tanks in Tankers.

3.3.3 International Electrotechnical Commission[4] Publication 79.1—Electrical Apparatus for Explosive Gas Atmospheres.

4. *Terminology*

4.1 Flame arrester—A device to prevent the passage of flame in accordance with a specified performance standard. Its flame arresting element is based on the principle of quenching.

4.2 Flame speed—The speed at which a flame propagates along a pipe or other system.

4.3 Flame Passage—The transmission of a flame through a flame arrester.

4.4 Gasoline Vapors—A non-leaded petroleum distillate consisting essentially of aliphatic hydrocarbon compounds with a boiling range approximating 65 °C/75 °C.

5. *Classification*

5.1 The two types of flame arresters covered in this specification are classified as follows:

5.1.1 Type I—Flame arresters acceptable for end-of-line applications.

5.1.2 Type II—Flame arresters acceptable for in-line applications.

6. *Ordering Information*

6.1 Orders for flame arresters under this specification shall include the following information as applicable:

6.1.1 Type (I or II).

6.1.2 Nominal pipe size.

6.1.3 Each gas or vapor in the tank being protected by the flame arrester, and the corresponding MESG.

[1] Footnotes appear at the end of this article.

6.1.4 Inspection and tests other than specified by this standard.

6.1.5 Anticipated ambient air temperature range.

6.1.6 Purchaser's inspection requirements (see section 10.1).

6.1.7 Description of installation (distance and configuration of pipe between the arrester, and the atmosphere or potential ignition source) (see section 9.2.4.2).

6.1.8 Materials of construction (see section 7).

6.1.9 Maximum flow rate and the design pressure drop for that maximum flow rate.

7. *Materials*

7.1 The flame arrester housing, and other parts or bolting used for pressure retention, shall be constructed of materials listed in ASTM F 1155 (incorporated by reference, see §154.106), or section VIII, Division 1 of the ASME Boiler and Pressure Vessel Code.

7.1.1 Arresters, elements, gaskets, and seals must be of materials resistant to attack by seawater and the liquids and vapors contained in the tank being protected (see section 6.1.3).

7.2 Nonmetallic materials, other than gaskets and seals, shall not be used in the construction of pressure retaining components of the flame arrester.

7.2.1 Nonmetallic gaskets and seals shall be non-combustible and suitable for the service intended.

7.3 Bolting materials, other than that of Section 7.1, shall be at least equal to those listed in Table 1 of ANSI B16.5.

7.4 The possibility of galvanic corrosion shall be considered in the selection of materials.

7.5 All other parts shall be constructed of materials suitable for the service intended.

8. *Other Requirements*

8.1 Flame arrester housings shall be gas tight to prevent the escape of vapors.

8.2 Flame arrester elements shall fit in the housing in a manner that will insure tightness of metal-to-metal contacts in such a way that flame cannot pass between the element and the housing.

8.2.1 The net free area through flame arrester elements shall be at least 1.5 times the cross-sectional area of the arrester inlet.

8.3 Housings and elements shall be of substantial construction and designed for the mechanical and other loads intended during service. In addition, they shall be capable of withstanding the maximum and minimum pressures and temperatures to which the device may be exposed under both normal and the specified fire test conditions in section 14.

8.4 Threaded or flanged pipe connections shall comply with the applicable B16 standards in ASTM F 1155 (incorporated by reference, see §154.106). Welded joints shall comply with ASTM F 722 (incorporated by reference, see §154.106).

8.5 All flat joints of the housing shall be machined true and shall provide for a joint having adequate metal-to-metal contact.

8.6 Where welded construction is used for pressure retaining components, welded joint design details, welding and non-destructive testing shall be in accordance with section VIII, Division 1, of the ASME Code and ASTM F 722 (incorporated by reference, see §154.106). Welders and weld procedures shall be qualified in accordance with section IX of the ASME Code.

8.7 The design of flame arresters shall allow for ease of inspection and removal of internal elements for replacement, cleaning or repair without removal of the entire device from the system.

8.8 Flame arresters shall allow for efficient drainage of condensate without impairing their efficiency to prevent the passage of flame.

8.9 All fastenings shall be protected against loosening.

8.10 Flame arresters shall be designed and constructed to minimize the effect of fouling under normal operating conditions.

8.11 Flame arresters shall be capable of operating over the full range of ambient air temperatures anticipated.

8.12 End-of-line flame arresters shall be so constructed as to direct the efflux vertically upward.

8.13 Flame arresters shall be of first class workmanship and free from imperfections which may affect their intended purpose.

8.14 Tank vent flame arresters shall show no flame passage when subjected to the tests in 9.2.4.

9. *Prototype Tests*

9.1 Tests shall be conducted by an independent laboratory capable of performing the tests. The manufacturer, in choosing a laboratory, accepts that it is a qualified independent laboratory by determining that it has (or has access to) the apparatus, facilities, personnel, and calibrated instruments that are necessary to test flame arresters in accordance with this standard.

9.1.1 A test report shall be prepared by the laboratory which shall include:

9.1.1.1 Detailed drawings of the flame arrester and its components (including a parts list identifying the materials of construction).

9.1.1.2 Types of tests conducted and results obtained.

9.1.1.3 Specific advice on approved attachments (see section 9.2.4.1).

9.1.1.4 Types of gases or vapors for which the flame arrester is approved (see section 6.1.3).

9.1.1.5 Drawings of the test rig.

9.1.1.6 Record of all markings found on the tested flame arrester.

9.1.1.7 A report number.

9.2 One of each model Type I and Type II flame arrester shall be tested. Where approval of more than one size of a flame arrester model is desired, the largest and smallest sizes shall be tested. A change of design, material, or construction which may affect the corrosion resistance, endurance burn, or flashback capabilities of the flame arrester shall be considered a change of model for the purpose of this paragraph.

9.2.1 The flame arrester shall have the same dimensions, configuration, and the most unfavorable clearances expected in production units.

9.2.2 A corrosion test shall be conducted. In this test, a complete arrester, including a section of pipe similar to that to which it will be fitted, shall be exposed to a 20% sodium chloride solution spray at a temperature of 25 degrees C for a period of 240 hours, and allowed to dry for 48 hours. Following this exposure, all movable parts shall operate properly and there shall be no corrosion deposits which cannot be washed off.

9.2.3 Performance characteristics as declared by the manufacturer, such as flow rates under both positive and negative pressure, operating sensitivity, flow resistance, and velocity, shall be demonstrated by appropriate tests.

9.2.4 Tank vent flame arresters shall be tested for endurance burn and flashback in accordance with the test procedures in section 14. The following constraints apply:

9.2.4.1 Where a Type I flame arrester is provided with cowls, weather hoods and deflectors, etc., it shall be tested in each configuration in which it is provided.

9.2.4.2 Type II arresters shall be specifically tested with the inclusion of all pipes, tees, bends, cowls, weather hoods, etc., which may be fitted between the arrester and the atmosphere.

9.2.5 Devices which are provided with a heating arrangement shall pass the required tests at the heated temperature.

9.2.6 After all tests are completed, the device shall be disassembled and examined, and no part of the device shall be damaged or show permanent deformation.

10. *Inspection*

10.1 The manufacturer shall afford the purchaser's inspector all reasonable facilities necessary to assure that the material is being furnished in accordance with this standard. All examinations and inspections shall be made at the place of manufacture, unless otherwise agreed upon.

10.2 Each finished flame arrester shall be visually and dimensionally checked to ensure that the device corresponds to this standard, is certified in accordance with section 11 and is marked in accordance with section 12. Special attention shall be given to checking the proper fit-up of joints (see sections 8.5 and 8.6)

11. *Certification*

11.1 Manufacturer's certification that a flame arrester has been constructed in accordance with this standard shall be provided in an instruction manual. The manual shall include as applicable:

11.1.1 Installation instructions and a description of all configurations tested (reference paragraph 9.2.4.1 and 9.2.4.2). Installation instructions to include manufacturer's recommended limitations based on all configurations tested.

11.1.2 Operating instructions.

11.1.3 Maintenance requirements.

11.1.3.1 Instructions on how to determine when flame arrester cleaning is required and the method of cleaning.

11.1.4 Copy of test report (see section 9.1.1).

11.1.5 Flow test data, including flow rates under both positive and negative pressures, operating sensitivity, flow resistance, and velocity.

11.1.6 The ambient air temperature range over which the device will effectively prevent the passage of flame. (NOTE: Other factors such as condensation and freezing of vapors should be evaluated at the time of equipment specification.)

12. *Marking*

12.1 Each flame arrester shall be permanently marked indicating:

12.1.1 Manufacturer's name or trademark.

12.1.2 Style, type, model or other manufacturer's designation for the flame arrester.

12.1.3 Size of the inlet and outlet.

12.1.4 Type of device (Type I or II).

12.1.5 Direction of flow through the flame arrester.

12.1.6 Test laboratory and report number.

12.1.7 Lowest MESG of gases for which the flame arrester is suitable for.

12.1.8 Ambient air operating temperature range.

12.1.9 ASTM designation of this standard.

13. *Quality Assurance*

13.1 Flame arresters shall be designed, manufactured and tested in a manner that ensures they meet the characteristics of the unit tested in accordance with this standard.

13.2 The flame arrester manufacturer shall maintain the quality of the flame arresters that are designed, tested and marked in accordance with this standard. At no time shall a flame arrester be sold with this standard designation that does not meet the requirements herein.

14. *Test Procedures for Flame Arresters*

14.1 Media/Air Mixtures

14.1.1 For vapors from flammable or combustible liquids with a MESG greater than or equal to 0.9 mm, technical grade hexane or gasoline vapors shall be used for all tests in this section except technical grade propane may be used for the flashback test in Section 14.2. For vapors with a MESG less than 0.9 mm, the specific vapor (or alternatively, a media with a MESG less than or equal to the

MESG of the vapor) must be used as the test medium in all section 14 tests.

14.1.2 Hexane, propane, gasoline and chemical vapors shall be mixed with air to form the most easily ignitable mixture.[5]

14.2 *Flashback Test*

14.2.1 A flashback test shall be carried out as follows:

14.2.1.1 The test rig shall consist of an apparatus producing an explosive mixture, a small tank with a diaphragm, a prototype of the flame arrester, a plastic bag[6] and a firing source in three positions (see Figure 1).[7]

14.2.1.2 The tank, flame arrester assembly and the plastic bag enveloping the prototype flame arrester shall be filled so that this volume contains the most easily ignitable vapor/air mixture.[8] The concentration of the mixture should be verified by appropriate testing of the gas composition in the plastic bag. Three ignition sources shall be installed along the axis of the bag, one close to the flame arrester, another as far away as possible therefrom, and the third at the midpoint between these two. These three sources shall be fired in succession, one during each of the three tests. Flame passage shall not occur during this test.

14.2.1.3 If flame passage occurs, the tank diaphragm will burst and this will be audible and visible to the operator by the emission of a flame. Flame, heat and pressure sensors may be used as an alternative to a bursting diaphragm.

14.3 *Endurance Burn Test*

14.3.1 An endurance burning test shall be carried out as follows:

14.3.1.1 The test rig as referred to in 14.2 may be used, without the plastic bag. The flame arrester shall be so installed that the mixture emission is vertical. In this position the mixture shall be ignited.

14.3.1.2 Endurance burning shall be achieved by using the most easily ignitable test vapor/air mixture with the aid of a pilot flame or a spark igniter at the outlet. By varying the proportions of the flammable mixture and the flow rate, the arrester shall be heated until the highest obtainable temperature on the cargo tank side of the arrester is reached. The highest attainable temperature may be considered to have been reached when the rate of rise of temperature does not exceed 0.5 °C per minute over a ten minute period. This temperature shall be maintained for a period of ten minutes, after which the flow shall be stopped and the conditions observed. If difficulty arises in establishing the highest attainable temperature, the following criteria shall apply. When the temperature appears to be approaching the maximum temperature, using the most severe conditions of flammable mixtures and flow rate, but increases at a rate in excess of 0.5 °C per minute over a ten minute period, endurance burning shall be continued for a period of two hours after which the flow shall be stopped and the conditions observed. Flame passage shall not occur during this test.

[1] American Society for Testing and Materials (ASTM), 100 Barr Harbor Dr., West Conshohocken, PA 19428–2959.

[2] Available from the American Society of Mechanical Engineers International, Three Park Avenue, New York, NY 10016–5990.

[3] Available from the International Maritime Organization, 4 Albert Embankment, London SEl 7SR, England.

[4] Available from the International Electrotechnical Commission, 1 rue de Varembe, Geneva, Switzerland

[5] See IEC Publication 79–1.

[6] The dimensions of the plastic bag are dependent on those of the flame arrester. The plastic bag may have a circumference of 2 m, a length of 2.5 m and a wall thickness of .05 m.

[7] In order to avoid remnants of the plastic bag from falling back on to the flame arrester being tested after ignition of the fuel/air mixture, it may be useful to mount a coarse wire frame across the flame arrester within the plastic bag. The frame should be constructed so as not to interfere with the test result.

[8] See IEC Publication 79–1.

FIGURE 1

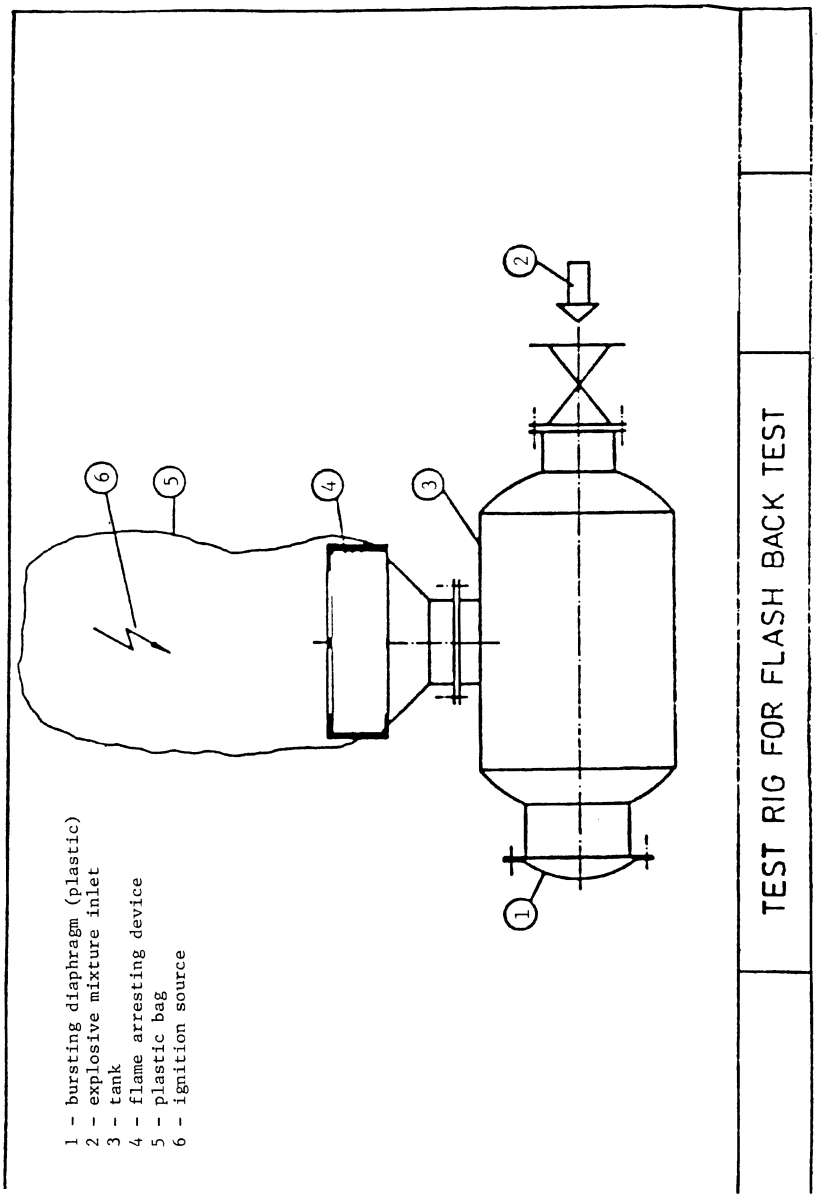
1 - bursting diaphragm (plastic)
2 - explosive mixture inlet
3 - tank
4 - flame arresting device
5 - plastic bag
6 - ignition source
1
2
3
4
5
6
TEST RIG FOR FLASH BACK TEST

ATTACHMENT 1

| Inflammable gas or vapor | Experimental maximum safe gap | |
|---|---|---|
| | mm | in. |
| Methane | 1.170 | 0.046 |
| Blast furnace gas | 1.193 | 0.047 |
| Propane | 0.965 | 0.038 |
| Butane | 1.066 | 0.042 |
| Pentane | 1.016 | 0.040 |
| Hexane | 0.965 | 0.038 |
| Heptane | 0.965 | 0.038 |
| Iso-octane | 1.040 | 0.041 |
| Decane | 1.016 | 0.040 |
| Benzene | 0.99 | 0.039 |
| Xylene | 1.066 | 0.042 |
| Cyclohexane | 0.94 | 0.037 |
| Acetone | 1.016 | 0.040 |
| Ethylene | 0.71 | 0.028 |
| Methyl-ethyl-ketone | 1.016 | 0.040 |
| Carbon monoxide | 0.915 | 0.036 |
| Methyl-acetate | 0.990 | 0.039 |
| Ethyl-acetate | 1.04 | 0.041 |
| Propyl-acetate | 1.04 | 0.041 |
| Butyl-acetate | 1.016 | 0.040 |
| Amyl-acetate | 0.99 | 0.039 |
| Methyl alcohol | 0.915 | 0.036 |
| Ethyl alcohol | 1.016 | 0.040 |
| Iso-butyl-alcohol | 0.965 | 0.038 |
| Butyl-alcohol (Normal) | 0.94 | 0.037 |
| Amyl-alcohol | 0.99 | 0.039 |
| Ethyl-ether | 0.864 | 0.034 |
| Coal gas ($H_2$ 57%) | 0.482 | 0.019 |
| Acetylene | <0.025 | <0.001 |
| Carbon disulphide | 0.203 | 0.008 |
| Hydrogen | 0.102 | 0.004 |
| Blue water gas ($H_2$ 53% CO 47%) | 0.203 | 0.008 |
| Ethyl nitrate | <0.025 | <0.001 |
| Ammonia | [1]3.33 | [1]0.133 |
| Ethylene oxide | 0.65 | 0.026 |
| Ethyl nitrite | 0.922 | 0.038 |

[1]Approximately.

[CGD 88–102, 55 FR 25441, June 21, 1990, as amended by USCG–1999–5832, 64 FR 34715, June 29, 1999; USCG–2000–7223, 65 FR 40058, June 29, 2000]

## APPENDIX C TO PART 154—GUIDELINES FOR DETERMINING AND EVALUATING REQUIRED RESPONSE RESOURCES FOR FACILITY RESPONSE PLANS

### *1. Purpose*

1.1 The purpose of this appendix is to describe the procedures for identifying response resources to meet the requirements of subpart F of this part. These guidelines will be used by the facility owner or operator in preparing the response plan and by the Captain of the Port (COTP) when reviewing them. Response resources identified in subparts H and I of this part should be selected using the guidelines in section 2 and Table 1 of this appendix.

### *2. Equipment Operability and Readiness*

2.1 All equipment identified in a response plan must be designed to operate in the conditions expected in the facility's geographic area. These conditions vary widely based on location and season. Therefore, it is difficult to identify a single stockpile of response equipment that will function effectively in each geographic location.

2.2 Facilities handling, storing, or transporting oil in more than one operating environment as indicated in Table 1 of this appendix must identify equipment capable of successfully functioning in each operating environment.

2.3 When identifying equipment for response plan credit, a facility owner or operator must consider the inherent limitations in the operability of equipment components and response systems. The criteria in Table 1 of this appendix should be used for evaluating the operability in a given environment. These criteria reflect the general conditions in certain operating areas.

2.3.1 The Coast Guard may require documentation that the boom identified in a response plan meets the criteria in Table 1. Absent acceptable documentation, the Coast Guard may require that the boom be tested to demonstrate that it meets the criteria in Table 1. Testing must be in accordance with ASTM F 715 (incorporated by reference, see §154.106), or other tests approved by the Coast Guard.

2.4 Table 1 of this appendix lists criteria for oil recovery devices and boom. All other equipment necessary to sustain or support response operations in the specified operating environment must be designed to function in the same conditions. For example, boats which deploy or support skimmers or boom must be capable of being safely operated in the significant wave heights listed for the applicable operating environment.

2.5 A facility owner or operator must refer to the applicable local contingency plan or ACP, as appropriate, to determine if ice, debris, and weather-related visibility are significant factors in evaluating the operability of equipment. The local contingency plan or ACP will also identify the average temperature ranges expected in the facility's operating area. All equipment identified in a response plan must be designed to operate within those conditions or ranges.

2.6 The requirements of subparts F, G, H and I of this part establish response resource mobilization and response times. The distance of the facility from the storage location of the response resources must be used to determine whether the resources can arrive on scene within the stated time. A facility owner or operator shall include the time for notification, mobilization, and travel time of response resources identified to meet the maximum most probable discharge and Tier 1 worst case discharge response time requirements. For subparts F and G, tier 2 and 3 response resources must be notified and

mobilized as necessary to meet the requirements for arrival on scene in accordance with §§154.1045 or 154.1047 of subpart F, or §154.1135 of subpart G, as appropriate. An on water speed of 5 knots and a land speed of 35 miles per hour is assumed unless the facility owner or operator can demonstrate otherwise.

2.7 For subparts F and G, in identifying equipment, the facility owner or operator shall list the storage location, quantity, and manufacturer's make and model. For oil recovery devices, the effective daily recovery capacity, as determined using section 6 of this appendix must be included. For boom, the overall boom height (draft plus freeboard) should be included. A facility owner or operator is responsible for ensuring that identified boom has compatible connectors.

2.8 For subparts H and I, in identifying equipment, the facility owner or operator shall list the storage location, quantity, and manufacturer's make and model. For boom, the overall boom height (draft plus freeboard) should be included. A facility owner or operator is responsible for ensuring that identified boom has compatible connectors.

*3. Determining Response Resources Required for the Average Most Probable Discharge*

3.1 A facility owner or operator shall identify sufficient response resources available, through contract or other approved means as described in §154.1028(a), to respond to the average most probable discharge. The equipment must be designed to function in the operating environment at the point of expected use.

3.2 The response resources must include:

3.2.1 1,000 feet of containment boom or two times the length of the largest vessel that regularly conducts oil transfers to or from the facility, whichever is greater, and a means deploying it available at the spill site within 1 hour of the discovery of a spill.

3.2.2 Oil recovery devices with an effective daily recovery capacity equal to the amount of oil discharged in an average most probable discharge or greater available at the facility within 2 hours of the detection of an oil discharge.

3.2.3 Oil storage capacity for recovered oily material indicated in section 9.2 of this appendix.

*4. Determining Response Resources Required for the Maximum Most Probable Discharge*

4.1 A facility owner or operator shall identify sufficient response resources available, by contract or other approved means as described in §154.1028(a), to respond to discharges up to the maximum most probable discharge volume for that facility. This will require response resources capable of containing and collecting up to 1,200 barrels of oil or 10 percent of the worst case discharge, whichever is less. All equipment identified must be designed to operate in the applicable operating environment specified in Table 1 of this appendix.

4.2 Oil recovery devices identified to meet the applicable maximum most probable discharge volume planning criteria must be located such that they arrive on scene within 6 hours in higher volume port areas (as defined in 154.1020) and the Great Lakes and within 12 hours in all other areas.

4.3 Because rapid control, containment, and removal of oil is critical to reduce spill impact, the effective daily recovery capacity for oil recovery devices must equal 50 percent of the planning volume applicable for the facility as determined in section 4.1 of this appendix. The effective daily recovery capacity for oil recovery devices identified in the plan must be determined using the criteria in section 6 of this appendix.

4.4 In addition to oil recovery capacity, the plan must identify sufficient quantities of containment boom available, by contract or other approved means as described in §154.1028(a), to arrive within the required response times for oil collection and containment and for protection of fish and wildlife and sensitive environments. While the regulation does not set required quantities of boom for oil collection and containment, the response plan must identify and ensure, by contract or other approved means as described in §154.1028(a), the availability of the boom identified in the plan for this purpose.

4.5 The plan must indicate the availability of temporary storage capacity to meet the guidelines of section 9.2 of this appendix. If available storage capacity is insufficient to meet this level, then the effective daily recovery capacity must be derated to the limits of the available storage capacity.

4.6 The following is an example of a maximum most probable discharge volume planning calculation for equipment identification in a higher volume port area: The facility's worst case discharge volume is 20,000 barrels. Ten percent of this is 2,000 barrels. Since this is greater than 1,200 barrels, 1,200 barrels is used as the planning volume. The effective daily recovery capacity must be 50 percent of this, or 600 barrels per day. The ability of oil recovery devices to meet this capacity will be calculated using the procedures in section 6 of this appendix. Temporary storage capacity available on scene must equal twice the daily recovery rate as indicated in section 9 of this appendix, or 1,200 barrels per day. This is the information the facility owner or operator will use to identify and ensure the availability of, through contract or other approved means as described in §154.1028(a), the required response resources. The facility owner will also

need to identify how much boom is available for use.

*5. Determining Response Resources Required for the Worst Case Discharge to the Maximum Extent Practicable*

5.1 A facility owner or operator shall identify and ensure availability of, by contract or other approved means, as described in §154.1028(a), sufficient response resources to respond to the worst case discharge of oil to the maximum extent practicable. Section 7 of this appendix describes the method to determine the required response resources.

5.2 Oil spill response resources identified in the response plan and available through contract or other approved means, as described in §154.1028(a), to meet the applicable worst case discharge planning volume must be located such that they can arrive at the scene of a discharge within the times specified for the applicable response tiers listed in §154.1045.

5.3 The effective daily recovery capacity for oil recovery devices identified in a response plan must be determined using the criteria in section 6 of this appendix. A facility owner or operator shall identify the storage locations of all response resources that must be used to fulfill the requirements for each tier. The owner or operator of a facility whose required daily recovery capacity exceeds the applicable response capability caps in Table 5 of this appendix shall identify sources of additional equipment, their locations, and the arrangements made to obtain this equipment during a response. The owner or operator of a facility whose calculated planning volume exceeds the applicable contracting caps in Table 5 shall identify sources of additional equipment equal to twice the cap listed in Tiers 1, 2, and 3 or the amount necessary to reach the calculated planning volume, whichever is lower. The resources identified above the cap must be capable of arriving on scene not later than the Tiers 1, 2, and 3 response times in §154.1045. No contract is required. While general listings of available response equipment may be used to identify additional sources, a response plan must identify the specific sources, locations, and quantities of equipment that a facility owner or operator has considered in his or her planning. When listing Coast Guard classified oil spill removal organization(s) which have sufficient removal capacity to recover the volume above the response capability cap for the specific facility, as specified in Table 5 of this appendix, it is not necessary to list specific quantities of equipment.

5.4 A facility owner or operator shall identify the availability of temporary storage capacity to meet the requirements of section 9.2 of this appendix. If available storage capacity is insufficient to meet this requirement, then the effective daily recovery capacity must be derated to the limits of the availabile storage capacity.

5.5 When selecting response resources necessary to meet the response plan requirements, the facility owner or operator must ensure that a portion of those resources are capable of being used in close-to-shore response activities in shallow water. The following percentages of the on-water response equipment identified for the applicable geographic area must be capable of operating in waters of 6 feet or less depth:

(i) Offshore—10 percent

(ii) Nearshore/inland/Great Lakes/rivers and canals—20 percent.

5.6 In addition to oil spill recovery devices, a facility owner or operator shall identify sufficient quantities of boom that are available, by contract or other approved means as described in §154.1028(a), to arrive on scene within the required response times for oil containment and collection. The specific quantity of boom required for collection and containment will depend on the specific recovery equipment and strategies employed. A facility owner or operator shall also identify sufficient quantities of oil containment boom to protect fish and wildlife and sensitive environments for the number of days and geographic areas specified in Table 2. Sections 154.1035(b)(4)(iii) and 154.1040(a), as appropriate, shall be used to determine the amount of containment boom required, through contract or other approved means as described in §154.1028(a), to protect fish and wildlife and sensitive environments.

5.7 A facility owner or operator must also identify, through contract or other approved means as described in §154.1028(a), the availability of an oil spill removal organization capable of responding to a shoreline cleanup operation involving the calculated volume of oil and emulsified oil that might impact the affected shoreline. The volume of oil that must be planned for is calculated through the application of factors contained in Tables 2 and 3. The volume calculated from these tables is intended to assist the facility owner or operator in identifying a contractor with sufficient resources and expertise. This planning volume is not used explicitly to determine a required amount of equipment and personnel.

*6. Determining Effective Daily Recovery Capacity for Oil Recovery Devices*

6.1 Oil recovery devices identified by a facility owner or operator must be identified by manufacturer, model, and effective daily recovery capacity. These rates must be used to determine whether there is sufficient capacity to meet the applicable planning critieria for the average most probable discharge, maximum most probable discharge, and worst case discharge to the maximum extent practicable.

6.2 For the purpose of determining the effective daily recovery capacity of oil recovery devices, the formula listed in section 6.2.1 of this appendix will be used. This method considers potential limitations due to available daylight, weather, sea state, and percentage of emulsified oil in the recovered material. The Coast Guard may assign a lower efficiency factor to equipment listed in a response plan if it determines that such a reduction is warranted.

6.2.1 The following formula must be used to calculate the effective daily recovery capacity:

R=T×24 hours×E

R=Effective daily recovery capacity

T=Throughout rate in barrels per hour (nameplate capacity)

E=20 percent Efficiency factor (or lower factor as determined by Coast Guard)

6.2.2 For those devices in which the pump limits the throughput of liquid, throughput rate will be calculated using the pump capacity.

6.2.3 For belt or mop type devices, the throughput rate will be calculated using the speed of the belt or mop through the device, assumed thickness of oil adhering to or collected by the device, and surface area of the belt or mop. For purposes of this calculation, the assumed thickness of oil will be 1/4 inch.

6.2.4 Facility owners or operators including oil recovery devices whose throughput is not measurable using a pump capacity or belt/mop speed may provide information to support an alternative method of calculation. This information must be submitted following the procedures in paragraph 6.3.2 of this appendix.

6.3 As an alternative to 6.2, a facility owner or operator may submit adequate evidence that a different effective daily recovery capacity should be applied for a specific oil recovery device. Adequate evidence is actual verified performance data in spill conditions or tests using ASTM F 631 (incorporated by reference, see §154.106), or an equivalent test approved by the Coast Guard.

6.3.1 The following formula must be used to calculate the effective daily recovery capacity under this alternative:

R=D×U

R=Effective daily recovery capacity

D=Average Oil Recovery Rate in barrels per hour (Item 26 in ASTM F 808; Item 13.2.16 in ASTM F 631; or actual performance data)

U=Hours per day that a facility owner or operator can document capability to operate equipment under spill conditions. Ten hours per day must be used unless a facility owner or operator can demonstrate that the recovery operation can be sustained for longer periods.

6.3.2 A facility owner or operator proposing a different effective daily recovery rate for use in a response plan shall provide data for the oil recovery devices listed. The following is an example of these calculations:

A weir skimmer identified in a response plan has a manufacturer's rated throughput at the pump of 267 gallons per minute (gpm).

267 gpm=381 barrels per hour

R=381×24×.2=1829 barrels per day

After testing using ASTM procedures, the skimmer's oil recovery rate is determined to be 220 gpm. The facility owner of operator identifies sufficient response resources available to support operations 12 hours per day.

220 gpm=314 barrels per hour

R=314×12=3768 barrels per day

The facility owner or operator will be able to use the higher rate if sufficient temporary oil storage capacity is available. Determinations of alternative efficiency factors under paragraph 6.2 or alternative effective daily recovery capacities under paragraph 6.3 of this appendix will be made by Commandant, (CG–535), 2100 2nd St., SW., Stop 7363, Washington, DC 20593–7363. Response contractors or equipment manufacturers may submit required information on behalf of multiple facility owners or operators directly in lieu of including the request with the response plan submission.

*7. Calculating the Worst Case Discharge Planning Volumes*

7.1 The facility owner or operator shall plan for a response to a facility's worst case discharge. The planning for on-water recovery must take into account a loss of some oil to the environment due to evaporative and natural dissipation, potential increases in volume due to emulsification, and the potential for deposit of some oil on the shoreline.

7.2 The following procedures must be used to calculate the planning volume used by a facility owner or operator for determining required on water recovery capacity:

7.2.1 The following must be determined: The worst case discharge volume of oil in the facility; the appropriate group(s) for the type of oil handled, stored, or transported at the facility (non-persistent (Group I) or persistent (Groups II, III, or IV)); and the facility's specific operating area. Facilities which handle, store, or transport oil from different petroleum oil groups must calculate each group separately. This information is to be used with Table 2 of this appendix to determine the percentages of the total volume to be used for removal capacity planning. This table divides the volume into three categories: Oil lost to the environment; oil deposited on the shoreline; and oil available for on-water recovery.

7.2.2 The on-water oil recovery volume must be adjusted using the appropriate emulsification factor found in Table 3 of this appendix. Facilities which handle, store, or

transport oil from different petroleum groups must assume that the oil group resulting in the largest on-water recovery volume will be stored in the tank or tanks identified as constituting the worst case discharge.

7.2.3 The adjusted volume is multiplied by the on-water oil recovery resource mobilization favor found in Table 4 of this appendix from the appropriate operating area and response tier to determine the total on-water oil recovery capacity in barrels per day that must be identified or contracted for to arrive on-scene with the applicable time for each response tier. Three tiers are specified. For higher volume port areas, the contracted tiers of resources must be located such that they can arrive on scene within 6, 30, and 54 hours of the discovery of an oil discharge. For all other river, inland, nearshore, offshore areas, and the Great Lakes, these tiers are 12, 36, and 60 hours.

7.2.4 The resulting on-water recovery capacity in barrels per day for each tier must be used to identify response resources necessary to sustain operations in the applicable operating area. The equipment must be capable of sustaining operations for the time period specified in Table 2 of this appendix. The facility owner or operator must identify and ensure the availability, through contract or other approved means as described in §154.1028(a), of sufficient oil spill recovery devices to provide the effective daily recovery oil recovery capacity required. If the required capacity exceeds the applicable cap specified in Table 5 of this appendix, then a facility owner or operator shall ensure, by contract or other approved means as described in §154.1028(a), only for the quantity of resources required to meet the cap, but shall identify sources of additional resources as indicated in §154.1045(m). The owner or operator of a facility whose planning volume exceeds the cap for 1993 must make arrangements to identify and ensure the availability, through contract or other approved means as described in §154.1028(a), of the additional capacity in 1998 or 2003, as appropriate. For a facility that handles, stores, or transports multiple groups of oil, the required effective daily recovery capacity for each group is calculated before applying the cap.

7.3 The following procedures must be used to calculate the planning volume for identifying shoreline cleanup capacity:

7.3.1 The following must be determined: The worst case discharge volume of oil for the facility; the appropriate group(s) for the type of oil handled, stored, or transported at the facility (non-persistent (Group I) or persistent (Groups II, III, or IV)); and the operating area(s) in which the facility operates. For a facility storing oil from different groups, each group must be calculated separately. Using this information, Table 2 of this appendix must be used to determine the percentages of the total planning volume to be used for shoreline cleanup resource planning.

7.3.2 The shoreline cleanup planning volume must be adjusted to reflect an emulsification factor using the same procedure as described in section 7.2.2.

7.3.3 The resulting volume will be used to identify an oil spill removal organization with the appropriate shoreline cleanup capability.

7.3.4 The following is an example of the procedure described above: A facility receives oil from barges via a dock located on a bay and transported by piping to storage tanks. The facility handles Number 6 oil (specific gravity .96) and stores the oil in tanks where it is held prior to being burned in an electric generating plant. The MTR segment of the facility has six 18-inch diameter pipelines running one mile from the dock-side manifold to several storage tanks which are located in the non-transportation-related portion of the facility. Although the facility piping has a normal working pressure of 100 pounds per square inch, the piping has a maximum allowable working pressure (MAWP) of 150 pounds per square inch. At MAWP, the pumping system can move 10,000 barrels (bbls) of Number 6 oil every hour through each pipeline. The facility has a roving watchman who is required to drive the length of the piping every 2 hours when the facility is receiving oil from a barge. The facility operator estimates that it will take approximately 10 minutes to secure pumping operations when a discharge is discovered. Using the definition of worst case discharge provided in §154.1029(b)(ii), the following calculation is provided:

| | bbls. |
|---|---|
| 2 hrs + 0.17 hour × 10,000 bbls per hour ..... | 21,700 |
| Piping volume = 37,322 $ft^3$ ÷ 5.6 $ft^3$/bbl ..... | +6,664 |
| Discharge volume per pipe ..... | 28,364 |
| Number of pipelines ..... | ×6 |
| Worst case discharge from MTR facility ..... | 170,184 |

To calculate the planning volumes for onshore recovery:

Worst case discharge: 170,184 bbls. Group IV oil

Emulsification factor (from Table 3): 1.4

Operating Area impacted: Inland

Planned percent oil onshore recovery (from Table 2): Inland 70%

Planning volumes for onshore recovery: Inland 170,184 ×.7 × 1.4 = 166,780 bbls.

Conclusion: The facility owner or operator must contract with a response resource capable of managing a 166,780 barrel shoreline cleanup.

To calculate the planning volumes for onwater recovery:

Worst case discharge: 170,184 bbls. Group IV oil

Emulsification factor (from Table 3): 1.4

Operating Area impacted: Inland

Planned percent oil on-water recovery (from Table 2): Inland 50%

Planning volumes for on-water recovery: Inland 170,184×.5×1.4 = 119,128 bbls.

To determine the required resources for on-water recovery for each tier, use the mobilization factors from Table 4:

| | Tier 1 | Tier 2 | Tier 3 |
|---|---|---|---|
| Inland = 119,128 bbls. ..... | × .15 | × .25 | × .40 |
| Barrels per day (pbd) ..... | 17,869 | 29,782 | 47,652 |

Conclusion: Since the requirements for all tiers for inland exceed the caps, the facility owner will only need to contract for 10,000 bpd for Tier 1, 20,000 bpd for Tier 2, and 40,000 bpd for Tier 3. Sources for the bpd on-water recovery resources above the caps for all three Tiers need only be identified in the response plan.

Twenty percent of the capability for Inland, for all tiers, must be capable of operating in water with a depth of 6 feet or less.

The facility owner or operator will also be required to identify or ensure, by contract or other approved means as described in §154.1028(a), sufficient response resources required under §§154.1035(b)(4) and 154.1045(k) to protect fish and wildlife and sensitive environments identified in the response plan for the worst case discharge from the facility.

The COTP has the discretion to accept that a facility can operate only a limited number of the total pipelines at a dock at a time. In those circumstances, the worst case discharge must include the drainage volume from the piping normally not in use in addition to the drainage volume and volume of oil discharged during discovery and shut down of the oil discharge from the operating piping.

*8. Determining the Capability of High-Rate Response Methods*

8.1. Calculate cumulative dispersant application capacity as follows:

8.1.1 A facility owner or operator must plan either for a dispersant capacity to respond to a facility's worst case discharge (WCD) of oil, or for the amount of the dispersant resource cap as required by §154.1045(i)(3) of this chapter, whichever is the lesser amount. When planning for the cumulative application capacity required, the calculations must account for the loss of some oil to the environment due to natural dissipation causes (primarily evaporation). The following procedure must be used to determine the cumulative application requirements:

8.1.2 Determine the WCD volume of oil in gallons and the appropriate oil group for the type of petroleum oil (persistent Groups II, III, and IV). For facilities with mixed petroleum oils, assume a total WCD volume using the group that constitutes the largest portion of the oil being handled or the group with the smallest natural dissipation factor;

8.1.3 Multiply the total WCD amount in gallons by the natural dissipation factor for the appropriate oil group as follows: Group II factor is 0.50; Group III is 0.30; and Group IV is 0.10. This represents the amount of oil that can be expected to be lost to natural dissipation in a nearshore environment. Subtract the oil amount lost to natural dissipation from the total WCD amount to determine the remaining oil available for treatment by dispersant application; and

8.1.4 Multiply the oil available for dispersant treatment by the dispersant-to-oil planning application ratio of 1 part dispersant to 20 parts oil (0.05). The resulting number represents the cumulative total dispersant-application capability that must be ensured available within the first 60 hours.

8.1.5(i) The following is an example of the procedure described in paragraphs 8.1.1 through 8.1.4 above: A facility with a 1,000,000 gallon WCD of crude oil (specific gravity 0.87) is located in an area with pre-authorization for dispersant use in the nearshore environment on the U.S. East Coast:

WCD: 1,000,000 gallons, Group III oil.

Natural dissipation factor for Group III: 30 percent.

General formula to determine oil available for dispersant treatment: (WCD) − [(WCD) × (natural dissipation factor)] = available oil.

E.g., 1,000,000 gal − (1,000,000 gal × .30) = 700,000 gallons of available oil.

Cumulative application capacity = Available oil × planning application ratio (1 gal dispersant/20 gals oil = 0.05).

E.g., 700,000 gal oil × (0.05) = 35,000 gallons cumulative dispersant-application capacity.

(ii) The requirements for cumulative dispersant-application capacity (35,000 gallons) for this facility's WCD is less than the overall dispersant capability for non-Gulf Coast waters required by §155.1045(i)(3) of this chapter. Because paragraph 8.1.1 of this appendix requires owners and operators to ensure the availability of the lesser of a facility's dispersant requirements for WCD or the amount of the dispersant cap provided for in §154.1045(i)(3), the facility in this example would be required to ensure the availability of 35,000 gallons of dispersant. More specifically, this facility would be required to meet the following tier requirements in §154.1045(i)(3), which total 35,000 gallons application:

Tier 1—4,125 gallons—Completed in 12 hours.

Tier 2—23,375 gallons—Completed in 36 hours.

Tier 3—7,500 gallons—Completed in 60 hours.

8.2 Determine Effective Daily Application Capacities (EDACs) for dispersant response systems as follows:

8.2.1 EDAC planning estimates for compliance with the dispersant application requirements in §154.1045(i)(3) are to be based on:

8.2.1.1 The spill occurring at the facility;

8.2.1.2 Specific dispersant application platform operational characteristics identified in the Dispersant Mission Planner 2 or as demonstrated by operational tests;

8.2.1.3 Locations of primary dispersant staging sites; and

8.2.1.4 Locations and quantities of dispersant stockpiles.

8.2.2 EDAC calculations with supporting documentation must be submitted to the NSFCC for classification as a Dispersant Oil Spill Removal Organization.

8.2.3(i) EDAC can also be calculated using the Dispersant Mission Planner 2 (DMP2). The DMP2 is a downloadable application that calculates EDAC for different dispersant response systems. It is located on the Internet at: *http://www.response.restoration.noaa.gov/spilltools*.

(ii) The DMP2 contains operating information for the vast majority of dispersant application platforms, including aircraft, both rotary and fixed wing, and vessels. The DMP2 produces EDAC estimates by performing calculations based on performance parameters of dispersant application platforms, locations of primary dispersant staging sites, home-based airport or port locations, and the facility location (for the spill site).

8.2.4 For each Captain of the Port zone where a dispersant response capability is required, the response plan must identify:

8.2.4.1 The type, number, and location of each dispersant-application platform intended for use to meet dispersant delivery requirements specified in §154.1045(i)(3) of this chapter;

8.2.4.2 The amount and location of available dispersant stockpiles to support each platform; and,

8.2.4.3 A primary staging site for each platform that will serve as its base of operations for the duration of the response.

8.3 In addition to the equipment and supplies required, a facility owner or operator must identify a source of support to conduct the monitoring and post-use effectiveness evaluation required by applicable regional plans and ACPs.

8.4 Identification of the resources for dispersant application does not imply that the use of this technique will be authorized. Actual authorization for use during a spill response will be governed by the provisions of the National Oil and Hazardous Substances Contingency Plan (40 CFR part 300) and the applicable Local or Area Contingency Plan.

*9. Additional Equipment Necessary To Sustain Response Operations*

9.1 A facility owner or operator is responsible for ensuring that sufficient numbers of trained personnel and boats, aerial spotting aircraft, containment boom, sorbent materials, boom anchoring materials, and other supplies are available to sustain response operations to completion. All such equipment must be suitable for use with the primary equipment identified in the response plan. A facility owner or operator is not required to list these response resources, but shall certify their availability.

9.2 A facility owner or operator shall evaluate the availability of adequate temporary storage capacity to sustain the effective daily recovery capacities from equipment identified in the plan. Because of the inefficiencies of oil spill recovery devices, response plans must identify daily storage capacity equivalent to twice the effective daily recovery rate required on scene. This temporary storage capacity may be reduced if a facility owner or operator can demonstrate by waste stream analysis that the efficiencies of the oil recovery devices, ability to decant waste, or the availability of alternative temporary storage or disposal locations will reduce the overall volume of oily material storage requirement.

9.3 A facility owner or operator shall ensure that his or her planning includes the capability to arrange for disposal of recovered oil products. Specific disposal procedures will be addressed in the applicable ACP.

TABLE 1—RESPONSE RESOURCE OPERATING CRITERIA OIL RECOVERY DEVICES

| Operating environment | Significant wave height [1] | Sea State |
|---|---|---|
| Rivers and Canals | ≤1 Foot | 1 |
| Inland | ≤3 feet | 2 |
| Great Lakes | ≤4 feet | 2–3 |
| Ocean | ≤6 feet | 3–4 |

**BOOM**

| Boom property | Use | | | |
|---|---|---|---|---|
| | Rivers and canals | Inland | Great Lakes | Ocean |
| Significant Wave Height [1] | ≤1 | ≤3 | ≤4 | ≤6 |
| Sea State | 1 | 2 | 2–3 | 3–4 |
| Boom height—in. (draft plus freeboard) | 6–18 | 18–42 | 18–42 | ≤42 |
| Reserve Buoyancy to Weight Ratio | 2:1 | 2:1 | 2:1 | 3:1 to 4:1 |
| Total Tensile Strength—lbs. | 4,500 | 15–20,000 | 15–20,000 | ≤20,000 |
| Skirt Fabric Tensile Strength—lbs | 200 | 300 | 300 | 500 |
| Skirt Fabric Tear Strength—lbs | 100 | 100 | 100 | 125 |

[1] Oil recovery devices and boom must be at least capable of operating in wave heights up to and including the values listed in Table 1 for each operating environment.

TABLE 2—REMOVAL CAPACITY PLANNING TABLE

| Spill location | Rivers and canals | | | Nearshore/inland Great Lakes | | | Offshore | | |
|---|---|---|---|---|---|---|---|---|---|
| Sustainability of on-water oil recovery | 3 Days | | | 4 Days | | | 6 Days | | |
| Oil group | % Natural dissipation | % Recovered floating oil | % Oil on shore | % Natural dissipation | % Recovered floating oil | % Oil on shore | % Natural dissipation | % Recovered floating oil | % Oil on shore |
| 1 Non-persistent oils | 80 | 10 | 10 | 80 | 20 | 10 | 95 | 5 | / |
| 2 Light crudes | 40 | 15 | 45 | 50 | 50 | 30 | 75 | 25 | 5 |
| 3 Medium crudes and fuels | 20 | 15 | 65 | 30 | 50 | 50 | 60 | 40 | 20 |
| 4 Heavy crudes and fuels | 5 | 20 | 75 | 10 | 50 | 70 | 50 | 40 | 30 |

TABLE 3—EMULSIFICATION FACTORS FOR PETROLEUM OIL GROUPS

| | |
|---|---|
| Non-Persistent Oil: | |
| Group I | 1.0 |
| Persistent Oil: | |
| Group II | 1.8 |
| Group III | 2.0 |
| Group IV | 1.4 |

TABLE 4—ON WATER OIL RECOVERY RESOURCE MOBILIZATION FACTORS

| Operating Area | Tier 1 | Tier 2 | Tier 3 |
|---|---|---|---|
| Rivers & Canals | .30 | .40 | .60 |
| Inland/Nearshore/Great Lakes | .15 | .25 | .40 |
| Offshore | .10 | .165 | .21 |

Note: These mobilization factors are for total response resources mobilized, not incremental response resources.

TABLE 5—RESPONSE CAPABILITY CAPS BY OPERATING AREA

| | Tier 1 | Tier 2 | Tier 3 |
|---|---|---|---|
| February 18, 1993: | | | |
| All except rivers and canals, Great Lakes. | 10K bbls/day | 20K bbls/day | 40K bbls/day/ |
| Great Lakes | 5K bbls/day | 10K bbls/day | 20K bbls/day. |
| Rivers and canals | 1,500 bbls/day | 3,000 bbls/day | 6,000 bbls/day. |
| February 18, 1998: | | | |
| All except rivers and canals, Great Lakes. | 12.5K bbls/day | 25K bbls/day | 50K bbls/day. |
| Great Lakes | 6.25K bbls/day | 12.3K bbls/day | 25K bbls/day. |
| Rivers and canals | 1,875 bbls/day | 3,750 bbls/day | 7,500 bbls/day. |
| February 18, 2003: | | | |
| All except rivers & canals & Great Lakes. | 12.5K bbls/day | 25K bbls/day | 50K bbls/day. |
| Great Lakes | 6.25K bbls/day | 12.3K bbls/day | 25K bbls/day. |
| Rivers & canals | 1,875 bbls/day | 3,750 bbls/day | 7,500 bbls/day. |

Note: The caps show cumulative overall effective daily recovery capacity, not incremental increases.
TBD = To be determined.

[CGD 91–036, 61 FR 7933, Feb. 29, 1996, as amended by CGD 96–026, 61 FR 33666, June 28, 1996; USCG–1999–5151, 64 FR 67175, Dec. 1, 1999; USCG–2000–7223, 65 FR 40058, June 29, 2000; USCG–2005–21531, 70 FR 36349, June 23, 2005; USCG–2001–8661, 74 FR 45025, Aug. 31, 2009; USCG–2010–0351, 75 FR 36284, June 25, 2010]

## APPENDIX D TO PART 154—TRAINING ELEMENTS FOR OIL SPILL RESPONSE PLANS

### *1. General*

1.1 The portion of the plan dealing with training is one of the key elements of a response plan. This concept is clearly expressed by the fact that Congress, in writing OPA 90, specifically included training as one of the sections required in a vessel or facility response plan. In reviewing submitted response plans, it has been noted that the plans often do not provide sufficient information in the training section of the plan for either the user or the reviewer of the plan. In some cases, plans simply state that the crew and others will be trained in their duties and responsibilities, with no other information being provided. In other plans, information is simply given that required parties will receive the necessary worker safety training (HAZWOPER).

1.2 The training section of the plan need not be a detailed course syllabus, but it must contain sufficient information to allow the user and reviewer (or evaluator) to have an understanding of those areas that are believed to be critical. Plans should identify key skill areas and the training that is required to ensure that the individual identified will be capable of performing the duties prescribed to them. It should also describe how the training will be delivered to the various personnel. Further, this section of the plan must work in harmony with those sections of the plan dealing with exercises, the spill management team, and the qualified individual.

1.3 The material in this appendix D is not all-inclusive and is provided for guidance only.

### *2. Elements To Be Addressed*

2.1 To assist in the preparation of the training section of a facility response plan, some of the key elements that should be addressed are indicated in the following sections. Again, while it is not necessary that the comprehensive training program for the company be included in the response plan, it is necessary for the plan to convey the elements that define the program as appropriate.

2.2 An effective spill response training program should consider and address the following:

2.2.1 Notification requirements and procedures.

2.2.2 Communication system(s) used for the notifications.

2.2.3 Procedures to mitigate or prevent any discharge or a substantial threat of a discharge of oil resulting from failure of manifold, mechanical loading arm, or other transfer equipment or hoses, as appropriate;

2.2.3.1 Tank overfill;

2.2.3.2 Tank rupture;

2.2.3.3 Piping rupture;

2.2.3.4 Piping leak, both under pressure and not under pressure, if applicable;

2.2.3.5 Explosion or fire;

2.2.3.6 Equipment failure (e.g., pumping system failure, relief valve failure, or other general equipment relevant to operational activities associated with internal or external facility transfers).

2.2.4 Procedures for transferring responsibility for direction of response activities from facility personnel to the spill management team.

2.2.5 Familiarity with the operational capabilities of the contracted oil spill removal organizations and the procedures to notify the activate such organizations.

2.2.6 Familiarity with the contracting and ordering procedures to acquire oil spill removal organization resources.

2.2.7 Familiarity with the ACP(s).

2.2.8 Familiarity with the organizational structures that will be used to manage the response actions.

2.2.9 Responsibilities and duties of the spill management team members in accordance with designated job responsibilities.

2.2.10 Responsibilities and authority of the qualified individual as described in the facility response plan and company response organization.

2.2.11 Responsibilities of designated individuals to initiate a response and supervise response resources.

2.2.12 Actions to take, in accordance with designated job responsibilities, in the event of a transfer system leak, tank overflow, or suspected cargo tank or hull leak.

2.2.13 Information on the cargoes handled by the vessel or facility, including familiarity with—

2.2.13.1 Cargo material safety data sheets;

2.2.13.2 Chemical characteristic of the cargo;

2.2.13.3 Special handling procedures for the cargo;

2.2.13.4 Health and safety hazards associated with the cargo; and

2.2.13.5 Spill and firefighting procedures for cargo.

2.2.14 Occupational Safety and Health Administration requirements for worker health and safety (29 CFR 1910.120).

### *3. Further Considerations*

In drafting the training section of the facility response plan, some further considerations are noted below (these points are raised simply as a reminder):

3.1 The training program should focus on training provided to facility personnel.

3.2 An organization is comprised of individuals, and a training program should be structured to recognize this fact by ensuring

that training is tailored to the needs of the individuals involved in the program.

3.3 An owner or operator may identify equivalent work experience which fulfills specific training requirements.

3.4 The training program should include participation in periodic announced and unannounced exercises. This participation should approximate the actual roles and responsibilities of individual specified in the plan.

3.5 Training should be conducted periodically to reinforce the required knowledge and to ensure an adequate degree of preparedness by individuals with responsibilities under the facility response plan.

3.6 Training may be delivered via a number of different means; including classroom sessions, group discussions, video tapes, self-study workbooks, resident training courses, on-the-job training, or other means as deemed appropriate to ensure proper instruction.

3.7 New employees should complete the training program prior to being assigned job responsibilities which require participation in emergency response situations.

*4. Conclusion*

The information in this appendix is only intended to assist response plan preparers in reviewing the content of and in modifying the training section of their response plans. It may be more comprehensive than is needed for some facilities and not comprehensive enough for others. The Coast Guard expects that plan preparers have determined the training needs of their organizations created by the development of the response plans and the actions identified as necessary to increase the preparedness of the company and its personnel to respond to actual or threatened discharges of oil from their facilities.

[CGD 91–036, 61 FR 7938, Feb. 29, 1996]

# PART 155—OIL OR HAZARDOUS MATERIAL POLLUTION PREVENTION REGULATIONS FOR VESSELS

## Subpart A—General

Sec.
155.100 Applicability.
155.110 Definitions.
155.120 Equivalents.
155.130 Exemptions.
155.140 Incorporation by reference.
155.T150 Temporary suspension of requirements to permit support of deepwater horizon spill response.

## Subpart B—Vessel Equipment

155.200 Definitions.
155.205 Discharge removal equipment for vessels 400 feet or greater in length.
155.210 Discharge removal equipment for vessels less than 400 feet in length.
155.215 Discharge removal equipment for inland oil barges.
155.220 Discharge removal equipment for vessels carrying oil as secondary cargo.
155.225 Internal cargo transfer capability.
155.230 Emergency control systems for tank barges.
155.235 Emergency towing capability for oil tankers.
155.240 Damage stability information for oil tankers and offshore oil barges.
155.245 Damage stability information for inland oil barges.
155.310 Containment of oil and hazardous material cargo discharges.
155.320 Fuel oil and bulk lubricating oil discharge containment.
155.330 Oily mixture (bilge slops)/fuel oil tank ballast water discharges on U.S. non-oceangoing ships.
155.350 Oily mixture (bilge slops)/fuel oil tank ballast water discharges on oceangoing ships of less than 400 gross tons.
155.360 Oily mixture (bilge slops) discharges on oceangoing ships of 400 gross tons and above but less than 10,000 gross tons, excluding ships that carry ballast water in their fuel oil tanks.
155.370 Oily mixture (bilge slops)/fuel oil tank ballast water discharges on oceangoing ships of 10,000 gross tons and above and oceangoing ships of 400 gross tons and above that carry ballast water in their fuel oil tanks.
155.380 Oily water separating equipment and bilge alarm approval standards.
155.400 Platform machinery space drainage on oceangoing fixed and floating drilling rigs and other platforms.
155.410 Pumping, piping and discharge requirements for U.S. non-oceangoing ships of 100 gross tons and above.
155.420 Pumping, piping and discharge requirements for oceangoing ships of 100 gross tons and above but less than 400 gross tons.
155.430 Standard discharge connections for oceangoing ships of 400 gross tons and above.
155.440 Segregation of fuel oil and ballast water on new oceangoing ships of 4,000 gross tons and above, other than oil tankers, and on new oceangoing oil tankers of 150 gross tons and above.
155.450 Placard.
155.470 Prohibited spaces.
155.480 Overfill devices.
155.490 [Reserved]

## Subpart C—Transfer Personnel, Procedures, Equipment, and Records

155.700 Designation of person in charge.

155.710 Qualifications of person in charge.
155.715 Contents of letter of designation as a person-in-charge of the transfer of fuel oil.
155.720 Transfer procedures.
155.730 Compliance with transfer procedures.
155.740 Availability of transfer procedures.
155.750 Contents of transfer procedures.
155.760 Amendment of transfer procedures.
155.770 Draining into bilges.
155.775 Maximum cargo level of oil.
155.780 Emergency shutdown.
155.785 Communications.
155.790 Deck lighting.
155.800 Transfer hose.
155.805 Closure devices.
155.810 Tank vessel security.
155.815 Tank vessel integrity.
155.820 Records.

## Subpart D—Tank Vessel Response Plans for Oil

155.1010 Purpose.
155.1015 Applicability.
155.1020 Definitions.
155.1025 Operating restrictions and interim operating authorization.
155.1026 Qualified individual and alternate qualified individual.
155.1030 General response plan requirements.
155.1035 Response plan requirements for manned vessels carrying oil as a primary cargo.
155.1040 Response plan requirements for unmanned tank barges carrying oil as a primary cargo.
155.1045 Response plan requirements for vessels carrying oil as a secondary cargo.
155.1050 Response plan development and evaluation criteria for vessels carrying groups I through IV petroleum oil as a primary cargo.
155.1052 Response plan development and evaluation criteria for vessels carrying group V petroleum oil as a primary cargo.
155.1055 Training.
155.1060 Exercises.
155.1062 Inspection and maintenance of response resources.
155.1065 Procedures for plan submission, approval, requests for acceptance of alternative planning criteria, and appeal.
155.1070 Procedures for plan review, revision, amendment, and appeal.

## Subpart E—Additional Response Plan Requirements for Tankers Loading Cargo at a Facility Permitted Under the Trans-Alaska Pipeline Authorization Act

155.1110 Purpose and applicability.
155.1115 Definitions.
155.1120 Operating restrictions and interim operating authorization.
155.1125 Additional response plan requirements.
155.1130 Requirements for prepositioned response equipment.
155.1135 Response plan development and evaluation criteria.
155.1145 Submission and approval procedures.
155.1150 Plan revision and amendment procedures.

## Subpart F—Response plan requirements for vessels carrying animal fats and vegetable oils as a primary cargo

155.1210 Purpose and applicability.
155.1225 Response plan submission requirements.
155.1230 Response plan development and evaluation criteria.

## Subpart G—Response Plan Requirements for Vessels Carrying Other Non-Petroleum Oils as a Primary Cargo

155.2210 Purpose and applicability.
155.2225 Response plan submission requirements.
155.2230 Response plan development and evaluation criteria.

## Subpart H [Reserved]

## Subpart I—Salvage and Marine Firefighting

155.4010 Purpose of this subpart.
155.4015 Vessel owners and operators who must follow this subpart.
155.4020 Complying with this subpart.
155.4025 Definitions.
155.4030 Required salvage and marine firefighting services to list in response plans.
155.4032 Other resource provider considerations.
155.4035 Required pre-incident information and arrangements for the salvage and marine firefighting resource providers listed in response plans.
155.4040 Response times for each salvage and marine firefighting service.
155.4045 Required agreements or contracts with the salvage and marine firefighting resource providers.
155.4050 Ensuring that the salvors and marine firefighters are adequate.
155.4052 Drills and exercises.
155.4055 Temporary waivers from meeting one or more of the specified response times.

APPENDIX A TO PART 155—SPECIFICATIONS FOR SHORE CONNECTION
APPENDIX B TO PART 155—DETERMINING AND EVALUATING REQUIRED RESPONSE RESOURCES FOR VESSEL RESPONSE PLANS

APPENDIX C TO PART 155—TRAINING ELEMENTS FOR OIL SPILL RESPONSE PLANS

AUTHORITY: 33 U.S.C. 1231, 1321(j); 46 U.S.C. 3703; E.O. 12777, 56 FR 54757, 3 CFR, 1991 Comp., p. 351; Department of Homeland Security Delegation No. 0170.1. Sections 155.100 through 155.130, 150.350 through 155.400, 155.430, 155.440, 155.470, 155.1030(j) and (k), and 155.1065(g) are also issued under 33 U.S.C. 1903(b). Section 155.490 also issued under section 4110(b) of Pub. L. 101–380. Sections 155.1110 through 155.1150 also issued under 33 U.S.C. 2735.

NOTE: Additional requirements for vessels carrying oil or hazardous materials are contained in 46 CFR parts 30 through 40, 150, 151, and 153.

## Subpart A—General

SOURCE: CGD 75–124a, 48 FR 45714, Oct. 6, 1983, unless otherwise noted.

### § 155.100 Applicability.

(a) Subject to the exceptions provided for in paragraph (b) and (c) of this section, this part applies to each ship that:

(1) Is operated under the authority of the United States, wherever located; or

(2) Is operated under the authority of a country other than the United States while in the navigable waters of the United States, or while at a port or terminal under the jurisdiction of the United States.

(b) This part does not apply to:

(1) A warship, naval auxiliary, or other ship owned or operated by a country when engaged in non-commercial service; or

(2) Any other ship specifically excluded by MARPOL 73/78.

(c) Section 155.480 applies to each tank vessel with a cargo capacity of 1,000 or more cubic meters (approximately 6,290 barrels), loading oil or oil reside as cargo that is operated under the authority of the United States, wherever located, or operated under the authority of a country other than the United States while in the navigable waters of the United States, or while at a port or terminal under the jurisdiction of the United States.

[CGD 75–124a, 48 FR 45714, Oct. 6, 1983, as amended by CGD 90–071a, 62 FR 48773, Sept. 17, 1997]

### § 155.110 Definitions.

Except as specifically stated in a section, the definitions in part 151 of this chapter, except for the word ''oil'', and in part 154 of this chapter, apply to this part. The following definition also applies to this part:

*Merchant mariner credential or MMC* means the credential issued by the Coast Guard under 46 CFR part 10. It combines the individual merchant mariner's document, license, and certificate of registry enumerated in 46 U.S.C. subtitle II part E as well as the STCW endorsement into a single credential that serves as the mariner's qualification document, certificate of identification, and certificate of service.

[USCG–2006–24371, 74 FR 11212, Mar. 16, 2009]

### § 155.120 Equivalents.

(a) For ships required to be surveyed under § 151.17 of this chapter, the Commandant may, upon receipt of a written request, allow any fitting, material, appliance or apparatus to be fitted in a ship as an alternative to that required by both MARPOL 73/78 and subpart B of this part if such fitting, material, appliance, or apparatus is at least as effective as that required by subpart B. Substitution of operational methods to control the discharge of oil in place of those design and construction features prescribed by MARPOL 73/78 that are also prescribed by subpart B of this part is not allowed.

(b) Any equivalent to a feature prescribed by MARPOL 73/78 that is authorized for a ship having an IOPP Certificate is noted on that Certificate.

(c) For tank vessels required to have overfill devices installed under parts 155 and 156 of this chapter, the Commandant may, upon receipt of a written request, allow any fitting, material, appliance, or apparatus to be fitted in a tank vessel as an alternative to the required overfill device(s) that are specified in these parts if the proposed alternative device is at least as effective as that required in the regulations.

[CGD 75–124a, 48 FR 45714, Oct. 6, 1983, as amended by CGD 90–071a, 59 FR 53290, Oct. 21, 1994]

**§ 155.130 Exemptions.**

(a) The Commandant grants an exemption or partial exemption from compliance with any requirement in this part if:

(1) A ship operator submits a written request for an exemption via the COTP or OCMI thirty (30) days before operations under the exemption are proposed unless the COTP or OCMI authorizes a shorter time; and

(2) It is determined from the request that:

(i) Compliance with a specific requirement is economically or physically impractical;

(ii) No alternative procedures, methods, or equipment standards exist that would provide an equivalent level of protection from pollution; and

(iii) The likelihood of discharges occurring as a result of the exemption is minimal.

(b) If requested, the applicant must submit any appropriate information, including an environmental and economic assessment of the effects of and the reasons for the exemption and proposed procedures, methods, or equipment standards.

(c) The exemption may specify the procedures, methods, or equipment standards that will apply.

(d) An oceangoing ship is not given an exemption from the requirements of subpart B of this part unless the ship is a hydrofoil, air cushion vehicle or other new type of ship (near-surface craft, submarine craft, etc.) whose constructional features are such as to render the application of any of the provisions of subpart B relating to construction and equipment unreasonable or impractical. The construction and equipment of the ship must provide protection equivalent to that afforded by subpart B of this part against pollution, having regard to the service for which the ship is intended.

(e) An exemption is granted or denied in writing. The decision of the Commandant is a final agency action.

NOTE TO §155.130: Additional exemptions/temporary waivers related to *salvage* and *marine firefighting* requirements can be found in §155.4055.

[CGD 75–124a, 48 FR 45714, Oct. 6, 1983, as amended by CGD 86–034, 55 FR 36254, Sept. 4, 1990; USCG–1998–3417, 73 FR 80648, Dec. 31, 2008]

**§ 155.140 Incorporation by reference.**

(a) Certain material is incorporated by reference into this part with the approval of the Director of the Federal Register under 5 U.S.C. 552(a) and 1 CFR part 51. To enforce any edition other than that specified in this section, the Coast Guard must publish notice of change in the FEDERAL REGISTER and the material must be available to the public. All approved material is available for inspection at the National Archives and Records Administration (NARA). For information on the availability of this material at NARA, call 202–741–6030 or go to *http://www.archives.gov/federal_register/code_of_federal_regulations/ibr_locations.html*. Also, it is available for inspection at the Coast Guard, Office of Vessel Activities, (CG–543), 2100 2nd St., SW., Stop 7581, Washington, DC 20593–7581, 202–372–1251. Approved material is available from the sources indicated in this section.

(b) *American National Standards Institute, Inc. (ANSI)*, 25 West 43rd Street, New York, NY 10036, 212–642–4980, *http://www.ansi.org/*:

(1) ANSI A10.14, Requirements for Safety Belts, Harnesses, Lanyards and Lifelines for Construction and Demolition Use, 1991 (''ANSI A10.14''), incorporation by reference approved for §155.230.

(2) [Reserved]

(c) *American Society for Testing and Materials (ASTM)*, 100 Barr Harbor Drive, West Conshohocken, PA 19428–2959, 610–832–9585, *http://www.astm.org/*:

(1) ASTM F 631–93, Standard Guide for Collecting Skimmer Performance Data in Controlled Environments (''ASTM F 631–93''), incorporation by reference approved for Appendix B.

(2) ASTM F 715–95, Standard Test Methods for Coated Fabrics Used for Oil Spill Control and Storage (''ASTM F 715–95''), incorporation by reference approved for in Appendix B.

(3) ASTM F 722–82 (1993), Standard Specification for Welded Joints for

Shipboard Piping Systems (''ASTM F 722–82''), incorporation by reference approved for Appendix A and Appendix B.

(4) ASTM F1413–07, Standard Guide for Oil Spill Dispersant Application Equipment: Boom and Nozzle Systems, incorporation by reference approved for § 155.1050.

(5) ASTM F1737–07, Standard Guide for Use of Oil Spill Dispersant-Application Equipment During Spill Response: Boom and Nozzle Systems, incorporation by reference approved for § 155.1050.

(6) ASTM F1779–08, Standard Practice for Reporting Visual Observations of Oil on Water, incorporation by reference approved for § 155.1050.

(d) *International Maritime Organization (IMO)*, 4 Albert Embankment, London SE1 7SR, United Kingdom, *http://www.imo.org/:*

(1) Resolution A.535(13), Recommendations on Emergency Towing Requirements for Tankers, November 17, 1983 (''Resolution A.535(13)''), incorporation by reference approved for § 155.235.

(2) Resolution MSC.35(63), Adoption of Guidelines for Emergency Towing Arrangement on Tankers, May 20, 1994 (''Resolution MSC.35(63)''), incorporation by reference approved for § 155.235.

(e) *National Fire Protection Association (NFPA)*, 1 Batterymarch Park, Quincy, MA 02269–7471, 617–770–3000, *http://www.nfpa.org/:*

(1) NFPA 1001, Standard for Fire Fighter Professional Qualifications, 2008 Edition (''NFPA 1001''), incorporation by reference approved for § 155.4050.

(2) NFPA 1005, Standard for Professional Qualifications for Marine Fire Fighting for Land-Based Fire Fighters, 2007 Edition (''NFPA 1005''), incorporation by reference approved for § 155.4050.

(3) NFPA 1021, Standard for Fire Officer Professional Qualifications, 2003 Edition (''NFPA 1021''), incorporation by reference approved for § 155.4050.

(4) NFPA 1405, Guide for Land-Based Fire Fighters Who Respond to Marine Vessel Fires, 2006 Edition (''NFPA 1405''), incorporation by reference approved for §§ 155.4035 and 155.4050.

(5) NFPA 1561, Standard on Emergency Services Incident Management System, 2008 Edition (''NFPA 1561''), incorporation by reference approved for § 155.4050.

(f) *Oil Companies International Marine Forum (OCIMF)*, 29 Queen Anne's Gate, London, SW1H 9BU England, *http://www.ocimf.com/:*

(1) Ship to Ship Transfer Guide (Petroleum), Second Edition, 1988, incorporation by reference approved for § 155.1035.

(2) [Reserved]

[USCG–1998–3417, 73 FR 80648, Dec. 31, 2008, as amended by USCG–2001–8661, 74 FR 45026, Aug. 31, 2009; USCG–2010–0351, 75 FR 36285, June 25, 2010]

### § 155.T150 Temporary suspension of requirements to permit support of deepwater horizon spill response.

(a) *Applicability*. This section applies to—

(1) Any ship and any tank vessel described in § 155.100 of this part, that has contracted with any oil spill removal organization (OSRO), as defined in § 155.1020 of this part, if the OSRO's response resources, as defined in § 154.1020 of this part, are deployed in coordination with the On-Scene Coordinator (OSC), as defined in 40 CFR 300.5, in support of the response to the Deepwater Horizon Spill of National Significance; and

(2) Any ship and any tank vessel described in § 155.100 of this part, that owns, operates, or has under its direct control, response resources, as defined in § 155.1020 of this part, deployed in coordination with the OSC, as defined in 40 CFR 300.5, in support of the response to the Deepwater Horizon Spill of National Significance.

(b) *Suspension of certain response time requirements*. From June 30, 2010 through December 31, 2010, the stipulated response times, including the response times contained in any written contractual agreement with any OSRO, for the availability of response resources, as defined in § 155.1020 of this part, for a maximum most probable discharge and a worst case discharge are not necessary to meet the requirements of this part.

(c) *Other response time requirements still effective*. Any response time requirements for the availability of response resources, as defined in § 154.1020

of this part, for an average most probable discharge, as required by this part, remain in effect.

EFFECTIVE DATE NOTE: By USCG–2010–0592, 75 FR 37719, June 30, 2010, temporary § 155.T150 was added, effective June 30, 2010 through Dec. 31, 2010.

## Subpart B—Vessel Equipment

SOURCE: CGD 75–124a, 48 FR 45715, Oct. 6, 1983, unless otherwise noted.

### § 155.200 Definitions.

As used in this subpart:

*Inland oil barge* means a tank barge carrying oil in bulk as cargo certificated by the Coast Guard under 46 CFR chapter I, subchapter D for river or canal service or lakes, bays, and sounds service.

*On-deck spill* means a discharge of oil on the deck of a vessel during loading, unloading, transfer, or other shipboard operations. An on-deck spill could result from a leaking fitting, an overfill, a bad connection, or similar operational mishap. The term *on-deck spill* is used to differentiate these operational discharges from those caused by collision or grounding where the hull is punctured and a tank is ruptured, resulting in an uncontrolled discharge of oil into the marine environment.

*Offshore oil barge* means a tank barge carrying oil in bulk as cargo, including dual-mode integrated tug-barges, certificated by the Coast Guard under 46 CFR chapter I, subchapter D, for navigation in waters outside the Boundary Lines, as defined in 46 CFR part 7, in any ocean or the Gulf of Mexico; any tank barge in Great Lakes service; or any foreign flag tank barge.

*Oil tanker* means a self-propelled vessel carrying oil in bulk as cargo, including integrated tug-barges designed for push-mode operation.

*Vessel carrying oil as secondary cargo* means a vessel carrying oil pursuant to a permit issued under 46 CFR 30.01–5, 46 CFR 70.05–30, or 46 CFR 90.05–35 or pursuant to an International Oil Pollution Prevention (IOPP) or Noxious Liquid Substance (NLS) certificate required by §§ 151.33 or 151.35 of this chapter; or any uninspected vessel that carries oil in bulk as cargo.

[CGD 90–068, 58 FR 67996, Dec. 22, 1993, as amended by USCG–2001–9046, 67 FR 58524, Sept. 17, 2002; 73 FR 79316, Dec. 29, 2008]

### § 155.205 Discharge removal equipment for vessels 400 feet or greater in length.

(a) Oil tankers and offshore oil barges with an overall length of 400 feet or more must carry appropriate equipment and supplies for the containment and removal of on-deck oil cargo spills of at least 12 barrels.

(b) The equipment and supplies must include—

(1) Sorbents;

(2) Non-sparking hand scoops, shovels, and buckets;

(3) Containers suitable for holding recovered waste;

(4) Emulsifiers for deck cleaning;

(5) Protective clothing;

(6) A minimum of one non-sparking portable pump with hoses; and

(7) Scupper plugs.

(c) During cargo transfer operations, the equipment and supplies must remain ready for immediate use.

[CGD 90–068, 58 FR 67996, Dec. 22, 1993, as amended by USCG–1998–3799, 63 FR 35531, June 30, 1998]

### § 155.210 Discharge removal equipment for vessels less than 400 feet in length.

(a) Oil tankers and offshore oil barges with an overall length of less than 400 feet must carry appropriate equipment and supplies for the containment and removal of on-deck oil spills of at least 7 barrels.

(b) The equipment and supplies must include—

(1) Sorbents;

(2) Non-sparking hand scoops, shovels, and buckets;

(3) Containers suitable for holding recovered waste;

(4) Emulsifiers for deck cleaning;

(5) Protective clothing;

(6) A minimum of one non-sparking portable pump with hoses; and

(7) Scupper plugs.

(c) During cargo transfer operations, the equipment and supplies must remain ready for immediate use.

[CGD 90–068, 58 FR 67996, Dec. 22, 1993, as amended by USCG–1998–3799, 63 FR 35531, June 30, 1998]

### § 155.215 Discharge removal equipment for inland oil barges.

(a) During cargo transfer operations, inland oil barges must have appropriate equipment and supplies ready for immediate use to control and remove on-deck oil cargo spills of at least one barrel.

(b) The equipment and supplies must include—

(1) Sorbents;

(2) Non-sparking hand scoops, shovels, and buckets;

(3) Containers suitable for holding recovered waste;

(4) Emulsifiers for deck cleaning; and

(5) Protective clothing.

(c) The oil barge owner or operator may rely on equipment available at the transfer facility receiving from or discharging to the barge, provided the barge owner or operator has prearranged for the use of the equipment by contract or other means approved by the Coast Guard.

[CGD 90–068, 58 FR 67996, Dec. 22, 1993, as amended by USCG–1998–3799, 63 FR 35531, June 30, 1998]

### § 155.220 Discharge removal equipment for vessels carrying oil as secondary cargo.

(a) Vessels carrying oil as secondary cargo must carry appropriate equipment and supplies for the containment and removal of on-deck oil cargo spills of at least one-half barrel.

(b) The equipment and supplies must include—

(1) Sorbents;

(2) Non-sparking hand scoops, shovels, and buckets;

(3) Containers suitable for holding recovered waste;

(4) Emulsifiers for deck cleaning; and

(5) Protective clothing

(c) The equipment and supplies must be ready for immediate use during cargo transfer operations.

[CGD 90–068, 58 FR 67996, Dec. 22, 1993, as amended by USCG–1998–3799, 63 FR 35531, June 30, 1998]

### § 155.225 Internal cargo transfer capability.

Oil tankers and offshore oil barges must carry suitable hoses and reducers for internal transfer of cargo to tanks or other spaces within the cargo block, unless the vessel's installed cargo piping system is capable of performing this function.

[CGD 90–068, 58 FR 67996, Dec. 22, 1993, as amended by USCG–1998–3799, 63 FR 35531, June 30, 1998]

### § 155.230 Emergency control systems for tank barges.

(a) *Application*. This section does not apply to foreign vessels engaged in innocent passage (that is, neither entering nor leaving a U.S. port); it applies to tank barges and vessels towing them on the following waters:

(1) On the territorial sea of the U.S. [as defined in Presidential Proclamation 5928 of December 27, 1988, it is the belt of waters 12 nautical miles wide with its shoreward boundary the baseline of the territorial sea], unless—

(i) The barge is being pushed ahead of, or towed alongside, the towing vessel; and

(ii) The barge's coastwise route is restricted, on its certificate of inspection (COI), so the barge may operate ''in fair weather only, within 20 miles of shore,'' or with words to that effect. The Officer in Charge, Marine Inspection, may define ''fair weather'' on the COI.

(2) In Great Lakes service unless—

(i) The barge is being pushed ahead of, or towed alongside, the towing vessel; and

(ii) The barge's route is restricted, on its certificate of inspection (COI), so the barge may operate ''in fair weather only, within 5 miles of a harbor,'' or with words to that effect. The Officer in Charge, Marine Inspection, may define ''fair weather'' on the COI.

(3) On Long Island Sound. For the purposes of this section, Long Island Sound comprises the waters between the baseline of the territorial sea on the eastern end (from Watch Hill Point, Rhode Island, to Montauk Point, Long Island) and a line drawn north and south from Premium Point, New York (about 40°54.5′ N, 73°45.5′ W), to Hewlett Point, Long Island (about

40°50.5′ N, 73°45.3′ W), on the western end.

(4) In the Strait of Juan de Fuca.

(5) On the waters of Admiralty Inlet north of Marrowstone Point (approximately 48°06′ N, 122°41′ W).

(b) *Safety program.* If you are the owner or operator of a single-hull tank barge or of a vessel towing it, you must adequately man and equip either the barge or the vessel towing it so the crew can arrest the barge by employing *Measure 1*, described in paragraph (b)(1) of this section. Moreover, the crew must be able to arrest or retrieve the barge by employing either *Measure 2* or *Measure 3*, described in paragraphs (b)(2) and (3) of this section, respectively. If you are the owner or operator of a double-hull tank barge, you must adequately equip it and train its crew or, if it is unmanned, train the crew of the vessel towing it, so the crew can retrieve the barge by employing *Measure 2* described in paragraph (b)(2) of this section.

(1) *Measure 1.* Each single-hull tank barge, whether manned or unmanned, must be equipped with an operable anchoring system that conforms to 46 CFR 32.15–15; except that, for barges operating only on the West Coast of the U.S., a system comprising heavy surge gear and bridle legs may serve instead of the anchoring system. Because these systems will also serve as emergency control systems, the owner or operator must ensure that they meet the following criteria:

(i) *Operation and performance.* When the barge is underway—

(A) The system is ready for immediate use;

(B) No more than two crewmembers are needed to operate the system and anchor the barge or arrest its movement;

(C) While preparing to anchor the barge or arrest its movement, the operator of the system should confer with the master or mate of the towing vessel regarding appropriate length of cable or chain to use; and

(D) Each operator of the system should wear a safety belt or harness secured by a lanyard to a lifeline, drop line, or fixed structure such as a welded padeye, if the sea or the weather warrants this precaution. Each safety belt, harness, lanyard, lifeline, and drop line must meet the specifications of ANSI A10.14 (incorporated by reference, see §155.140).

(ii) *Maintenance and inspections.* The owner or operator of the system shall inspect it annually. The inspection must verify that the system is ready for immediate use, and must include a visual inspection of the equipment that comprises the system in accordance with the manufacturer's recommendations. The inspection must also verify that the system is being maintained in accordance with the manufacturer's recommendations. The inspection need not include actual demonstration of the operation of the equipment or system.

(iii) *Training.* On each manned barge, every crewmember must be thoroughly familiar with the operation of the system. On each vessel towing an unmanned barge, every deck crewmember must be thoroughly familiar with the operation of the system installed on the barge. If during the last 12 months the system was not used to anchor or arrest the movement of the barge, then a drill on the use of the system must be conducted within the next month. The drill need not involve actual deployment of the system. However, it must allow every participant to demonstrate the competencies (that is, the knowledge, skills, and abilities) needed to ensure that everyone assigned a duty in anchoring or arresting the movement of the barge is ready to do his or her duty.

(2) *Measure 2.* If you are the owner or operator of a tank barge or a vessel towing it and this section applies to you by virtue of paragraph (a) of this section, you must have installed an emergency retrieval system or some other measure acceptable to the Coast Guard, as provided in paragraph (b)(3) of this section. Any such system must meet the following criteria:

(i) *Design.* The system must use an emergency towline with *at least* the same pulling strength as required of the primary towline. The emergency towline must be readily available on either the barge or the vessel towing it. The towing vessel must have on board equipment to regain control of the barge and continue towing (using the

emergency towline), without having to place personnel on board the barge.

(ii) *Operation and performance.* The system must use a stowage arrangement that ensures the readiness of the emergency towline and the availability of all retrieval equipment for immediate use in an emergency whenever the barge is being towed astern.

(iii) *Maintenance and inspection.* The owner or operator of the system shall inspect it annually. The inspection must verify that the emergency retrieval system is ready for immediate use, and must include a visual inspection of the equipment that comprises the system in accordance with the manufacturer's recommendations. The inspection must also verify that the system is being maintained in accordance with the manufacturer's recommendations. The inspection need not include actual demonstration of the operation of the equipment or system. Details concerning maintenance of towlines appear in 33 CFR 164.74(a)(3) and Navigation and Vessel Inspection Circular (NVIC) No. 5–92. Our NVICs are available online at *http://www.uscg.mil/hq/g-m/nvic/index.htm.*

(iv) *Training.* Barge-retrieval drills must take place annually, and not more than one month after a master or mate responsible for supervising barge retrieval begins employment on a vessel that tows tank barges.

(A) Each drill must allow every participant to demonstrate the competencies (that is, the knowledge, skills, and abilities) needed to ensure that everyone assigned a duty in barge retrieval is ready to do his or her part to regain control of a drifting barge.

(B) If the drill includes actual operation of a retrieval system, it must be conducted under the supervision of the master or mate responsible for retrieval, and preferably in open waters free from navigational hazards so as to minimize risk to personnel and the environment.

(3) *Measure 3.* If you are the owner or operator of a tank barge or a vessel towing it and this section applies to you by virtue of paragraph (a) of this section, you may use an alternative measure or system fit for retrieving a barge or arresting its movement as a substitute for Measure 2, described in paragraph (b)(2) of this section. Before you use such a measure or system, however, it must receive the approval of the Commandant (CG–521). It will receive this approval if it provides protection against grounding of the tank vessel comparable to that provided by one of the other two measures described in this section.

[USCG–1998–4443, 65 FR 31811, May 19, 2000, as amended by USCG–2001–8661, 74 FR 45026, Aug. 31, 2009; USCG–2010–0351, 75 FR 36285, June 25, 2010]

### § 155.235 Emergency towing capability for oil tankers.

An emergency towing arrangement shall be fitted at both ends on board all oil tankers of not less than 20,000 deadweight tons (dwt), constructed on or after September 30, 1997. For oil tankers constructed before September 30, 1997, such an arrangement shall be fitted at the first scheduled dry-docking, but not later than January 1, 1999. The design and construction of the towing arrangement shall be in accordance with IMO resolution MSC.35(63) (incorporated by reference; see § 155.140).

[USCG–2001–8661, 74 FR 45026, Aug. 31, 2009]

### § 155.240 Damage stability information for oil tankers and offshore oil barges.

(a) Owners or operators of oil tankers and offshore oil barges shall ensure that their vessels have prearranged, prompt access to computerized, shore-based damage stability and residual structural strength calculation programs.

(b) Vessel baseline strength and stability characteristics must be pre-entered into such programs and be consistent with the vessel's existing configuration.

(c) Access to the shore-based calculation program must be available 24 hours a day.

(d) At a minimum, the program must facilitate calculation of the following:

(1) Residual hull girder strength based on the reported extent of damage.

(2) Residual stability when the vessel's compartments are breached.

(3) The most favorable off-loading, ballasting, or cargo transfer sequences

to improve residual stability, reduce hull girder stresses, and reduce groundforce reaction.

(4) The bending and shear stresses caused by pinnacle loads from grounding or stranding.

[CGD 90–068, 58 FR 67996, Dec. 22, 1993, as amended by USCG–1998–3799, 63 FR 35531, June 30, 1998]

### § 155.245 Damage stability information for inland oil barges.

(a) Owners or operators of inland oil barges shall ensure that the vessel plans necessary to perform salvage, stability, and residual hull strength assessments are maintained at a shore-based location.

(b) Access to the plans must be available 24 hours a day.

[CGD 90–068, 58 FR 67997, Dec. 22, 1993, as amended by USCG–1998–3799, 63 FR 35531, June 30, 1998]

### § 155.310 Containment of oil and hazardous material cargo discharges.

(a) A tank vessel with a capacity of 250 or more barrels that is carrying oil or hazardous material as cargo must have—

(1) Under or around each loading manifold and each transfer connection point, a fixed container or enclosed deck area that, in all conditions of ship list or trim encountered during the loading operation, has a capacity of at least:

(i) One half barrel if it serves one or more hoses with an inside diameter of 2 inches or less, or one or more loading arms with a nominal pipe size diameter of 2 inches or less;

(ii) One barrel if it serves one or more hoses with an inside diameter of more than 2 inches but less than 4 inches, or one or more loading arms with a nominal pipe size diameter of more than 2 inches but less than 4 inches;

(iii) Two barrels if it serves one or more hoses with an inside diameter of 4 inches or more, but less than 6 inches, or one or more loading arms with a nominal pipe size diameter of 4 inches or more, but less than 6 inches;

(iv) Three barrels if it serves one or more hoses with an inside diameter of 6 inches or more, but less than 12 inches, or one or more loading arms with a nominal pipe size diameter of 6 inches or more, but less than 12 inches; or

(v) Four barrels if it serves one or more hoses with an inside diameter of 12 inches or more, or one or more loading arms with a nominal pipe size diameter of 12 inches or more;

(2) A means of draining or removing discharged oil or hazardous material from each container or enclosed deck area without discharging the oil or hazardous material into the water; and

(3) A mechanical means of closing each drain and scupper in the container or enclosed deck area required by this section.

(b) An offshore tank barge with a cargo capacity of 250 or more barrels that is carrying hazardous material as cargo and an inland tank barge with the capacity of 250 or more barrels that is carrying oil or a hazardous material as cargo must meet paragraph (a) of this section or be equipped with—

(1) A coaming, at least 4 inches high but not more than 8 inches high, enclosing the immediate area of the cargo hatches, loading manifolds, and transfer connections, that has a capacity, in all conditions of vessel list and trim to be encountered during the loading operation, of at least one-half barrel per hatch, manifold, and connection within the enclosed area;

(2) A fixed or portable container under each loading manifold and each transfer connection within the coaming, that holds at least one-half barrel;

(3) A mechanical means of closing each drain and scupper within the coaming; and

(4) A means of draining or removing discharged oil or hazardous material from the fixed or portable container and from within the coamings without discharging the oil or hazardous material into the water.

(c) All oil tankers and offshore oil barges with a cargo capacity of 250 or more barrels must have peripheral coamings, including port and starboard coamings and forward and aft athwartships coamings, completely enclosing the cargo deck area, cargo hatches, manifolds, transfer connections, and any other openings where cargo may overflow or leak.

(1) Coamings must be at least 4 inches high except in the aft corners.

(2) In the aft corners (port and starboard) of a vessel, the coamings must be at least 8 inches high and extend—

(i) Forward at least 14 feet from each corner; and

(ii) Inboard at least 8 feet from each corner.

(3) Each area enclosed by the coaming required under this paragraph must have—

(i) A means of draining or removing oil from the enclosed deck area without discharging oil into the water; and

(ii) A mechanical means of closing each drain and scupper in the enclosed deck-area.

(4) For a tankship, as defined in 46 CFR 30.10–67, the coaming or other barrier required in 46 CFR 32.56–15 may serve as the aft athwartships coaming if the tankship is otherwise in compliance with the requirements of this section.

(d) In addition to the requirements of paragraphs (a) and (b) of this section, an offshore oil barge with a cargo capacity of 250 or more barrels must have—

(1) A fixed or portable container that holds at least one-half barrel under each oil loading manifold and each oil transfer connection within the coaming;

(2) A mechanical means of closing each drain and scupper within the coaming; and

(3) A means of draining or removing discharged oil from the fixed or portable container and from within the coaming without discharging the oil into the water.

[CGD 75–124a, 48 FR 45715, Oct. 6, 1983, as amended by CGD 86–034, 55 FR 36254, Sept. 4, 1990; CGD 90–068, 58 FR 67997, Dec. 22, 1993; USCG–1998–3799, 63 FR 35531, June 30, 1998]

### § 155.320 Fuel oil and bulk lubricating oil discharge containment.

(a) A ship of 300 gross tons or more constructed after June 30, 1974 must have a fixed container or enclosed deck area under or around each fuel oil or bulk lubricating oil tank vent, overflow, and fill pipe, that:

(1) For a ship of 300 or more but less than 1600 gross tons has a capacity of at least one-half barrel; and

(2) For a ship of 1600 or more gross tons has a capacity of one barrel.

(b) A ship of 100 gross tons or more constructed before July 1, 1974, and a ship of 100 or more but less than 300 gross tons constructed after June 30, 1974 must:

(1) Meet paragraph (a)(1) of this section; or

(2) Equip each fuel oil or bulk lubricating oil tank vent, overflow, and fill pipe during oil transfer operations with a portable container of at least a 5 U.S. gallon capacity; or

(3) If the ship has a fill fitting for which containment is impractical, use an automatic back pressure shut-off nozzle.

(c) This section does not apply to a fixed or floating drilling rig or other platform.

### § 155.330 Oily mixture (bilge slops)/fuel oil tank ballast water discharges on U.S. non-oceangoing ships.

(a) No person may operate a U.S. non-oceangoing ship in the navigable waters of the United States, unless it has the capacity to retain on board all oily mixtures and is equipped to discharge these oily mixtures to a reception facility.

(b) A U.S. non-oceangoing ship may retain all oily mixtures on board in the ship's bilges. An oil residue (sludge) tank is not required.

(c) This section does not apply to a fixed or floating drilling rig or other platform.

[CGD 75–124a, 48 FR 45715, Oct. 6, 1983, as amended by USCG–2000–7641, 66 FR 55571, Nov. 2, 2001]

### § 155.350 Oily mixture (bilge slops)/fuel oil tank ballast water discharges on oceangoing ships of less than 400 gross tons.

(a) No person may operate an oceangoing ship of less than 400 gross tons, unless it either:

(1) Has the capacity to retain on board all oily mixtures and is equipped to discharge these oily mixtures to a reception facility; or

(2) Has approved oily-water separating equipment for processing oily mixtures from bilges or fuel oil tank ballast and discharges into the sea according to § 151.10 of this chapter.

(3) For equipment installed after 2004 to be approved under paragraph (a)(2) of this section, it must meet current standards in 46 CFR part 162, subpart 162.050 by the date set forth in paragraphs (a)(3)(i) and (a)(3)(ii) of this section, unless the equipment is installed on a ship constructed before 2005 and it would be unreasonable or impracticable to meet those current standards.

(i) A ship entering international service for the first time since 2004, must comply with the requirements of paragraph (a)(3) of this section by the date of its initial survey prior to receiving its International Oil Pollution Prevention (IOPP) certificate.

(ii) Any ship, other than a ship described in paragraph (a)(3)(i) of this section, must comply with the requirements of paragraph (a)(3) of this section by the date of the ship's first drydock after October 13, 2009.

(b) An oceangoing ship of less than 400 gross tons may retain all oily mixtures on board in the ship's bilges. An oil residue (sludge) tank is not required.

(c) This section does not apply to a barge that is not equipped with an installed bilge pumping system for discharge into the sea.

(d) This section does not apply to a fixed or floating drilling rig or other platform.

[CGD 75–124a, 48 FR 45715, Oct. 6, 1983, as amended by CGD 88–002, 54 FR 18407, Apr. 28, 1989; CGD 97–023, 62 FR 33364, June 19, 1997; USCG–1998–3799, 63 FR 35531, June 30, 1998; USCG–2000–7641, 66 FR 55571, Nov. 2, 2001; USCG–2004–18939, 74 FR 3377, Jan. 16, 2009; 74 FR 52418, Oct. 13, 2009]

### § 155.360 Oily mixture (bilge slops) discharges on oceangoing ships of 400 gross tons and above but less than 10,000 gross tons, excluding ships that carry ballast water in their fuel oil tanks.

(a)(1) No person may operate an oceangoing ship of 400 gross tons and above but less than 10,000 gross tons, excluding a ship that carries ballast water in its fuel oil tanks, unless it is fitted with approved 15 parts per million (ppm) oily-water separating equipment for the processing of oily mixtures from bilges or fuel oil tank ballast.

(2) For equipment installed after 2004 to be approved under paragraph (a)(1) of this section, it must meet current standards in 46 CFR part 162, subpart 162.050 by the date set forth in paragraphs (a)(2)(i) and (a)(2)(ii) of this section, unless the equipment is installed on a ship constructed before 2005 and it would be unreasonable or impracticable to meet those current standards.

(i) A ship entering international service for the first time since 2004, must comply with the requirements of paragraph (a)(2) of this section by the date of its initial survey prior to receiving its International Oil Pollution Prevention (IOPP) certificate.

(ii) Any ship, other than a ship described in paragraph (a)(2)(i) of this section, must comply with the requirements of paragraph (a)(2) of this section by the date of the ship's first drydock after October 13, 2009.

(b) No person may operate a ship under this section unless it is fitted with a tank or tanks of adequate capacity to receive the oil residue that cannot be dealt with otherwise.

(1) In new ships such tanks shall be designed and constructed to facilitate cleaning and the discharge of the oily residues to reception facilities. Existing ships shall comply with this requirement as far as reasonable and practicable.

(2) Tanks used for oily mixtures on ships certificated under 46 CFR Chapter I shall meet the requirements of 46 CFR 56.50–50(h) for isolation between oil and bilge systems.

(c) No person may operate a ship unless it is equipped with a pipeline to discharge oily mixtures to a reception facility.

(d) This section does not apply to a barge that is not equipped with an installed bilge pumping system for discharge into the sea.

(e) This section does not apply to a fixed or floating drilling rig or other platform, except as specified in § 155.400(a)(2).

[CGD 75–124a, 48 FR 45715, Oct. 6, 1983, as amended by USCG–1998–3799, 63 FR 35531, June 30, 1998; USCG–2000–7641, 66 FR 55571, Nov. 2, 2001; USCG–2004–18939, 74 FR 3377, Jan. 16, 2009; 74 FR 52418, Oct. 13, 2009]

**§ 155.370 Oily mixture (bilge slops)/fuel oil tank ballast water discharges on oceangoing ships of 10,000 gross tons and above and oceangoing ships of 400 gross tons and above that carry ballast water in their fuel oil tanks.**

(a) No person may operate an oceangoing ship of 10,000 gross tons and above, or any oceangoing ship of 400 gross tons and above, that carries ballast water in its fuel oil tanks, unless it has—

(1) Approved 15 ppm oily-water separating equipment for the processing of oily mixtures from bilges or fuel oil tank ballast;

(2) A bilge alarm; and

(3) A means for automatically stopping any discharge of oily mixture when the oil content in the effluent exceeds 15 ppm.

(4) For equipment installed after 2004 to be approved under paragraph (a) of this section, it must meet current standards in 46 CFR part 162, subpart 162.050 by the date set forth in paragraphs (a)(4)(i) and (a)(4)(ii) of this section, unless the equipment is installed on a ship constructed before 2005 and it would be unreasonable or impracticable to meet those current standards.

(i) A ship entering international service for the first time since 2004, must comply with the requirements of paragraph (a)(4) of this section by the date of its initial survey prior to receiving its International Oil Pollution Prevention (IOPP) certificate.

(ii) Any ship, other than a ship described in paragraph (a)(4)(i) of this section, must comply with the requirements of paragraph (4) of this section by the date of the ship's first drydock after October 13, 2009.

(b) No person may operate a ship under this section unless it is fitted with a tank or tanks of adequate capacity to receive the oil residue that cannot be dealt with otherwise.

(1) In new ships such tanks shall be designed and constructed to facilitate cleaning and the discharge of the oil residue to reception facilities. Existing ships shall comply with this requirement as far as reasonable and practicable.

(2) Tanks used for oily mixtures on ships certificated under 46 CFR Chapter I shall meet the requirements of 46 CFR 56.50–50(h) for isolation between oil and bilge systems.

(c) No person may operate a ship under this section unless it is equipped with a pipeline to discharge oily mixtures to a reception facility.

(d) This section does not apply to a barge that is not equipped with an installed bilge pumping system for discharge into the sea.

(e) This section does not apply to a fixed or floating drilling rig or other platform, except as specified in § 155.400(a)(2).

(Approved by the Office of Management and Budget under control number 1625–0009)

[CGD 75–124a, 48 FR 45715, Oct. 6, 1983, as amended by USCG–1998–3799, 63 FR 35531, June 30, 1998; USCG–2000–7641, 66 FR 55571, Nov. 2, 2001; USCG–2006–25150, 71 FR 39210, July 12, 2006; USCG–2004–18939, 74 FR 3377, Jan. 16, 2009; 74 FR 52418, Oct. 13, 2009]

**§ 155.380 Oily water separating equipment and bilge alarm approval standards.**

(a) On U.S. inspected ships, oily water separating equipment and bilge alarms must be approved under 46 CFR 162.050.

(b) On U.S. uninspected ships and foreign ships, oily water separating equipment and bilge alarms must be approved under either 46 CFR 162.050 or MARPOL 73/78 Annex I.

NOTE TO § 155.380(b): A copy of Annex I to the International Convention for the Prevention of Pollution from Ships, 1973 as modified by the Protocol of 1978 relating thereto, as amended (MARPOL 73/78) may be purchased from the International Maritime Organization, Publications Section, 4 Albert Embankment, London SE1 75R, United Kingdom, Telex 23588; see also *http://www.imo.org*.

(c) A ship that is required to have a bilge alarm may defer installment and use a previously installed bilge monitor provided the bilge monitor met Coast Guard approval requirements at the time of its installation and it does not allow more than a 15 ppm oil content in water discharge.

(d) The accuracy of the bilge alarms must be checked at IOPP Certificate renewal surveys according to the manufacturer's instructions. Alternatively, the unit may be replaced by a calibrated bilge alarm. The calibration

certificate for the bilge alarm, which certifies the date of the last calibration check, should be retained onboard for inspection purposes. The accuracy checks can only be done by the manufacturer or persons authorized by the manufacturer.

(e) Ship staff training must include familiarization in the operation and maintenance of the equipment.

(f) The routine maintenance of the oily water separating equipment and the bilge alarm must be clearly defined by the manufacturer in the associated operating and maintenance manuals. All routine and repair maintenance must be recorded.

[USCG–2004–18939, 74 FR 3377, Jan. 16, 2009]

### § 155.400 Platform machinery space drainage on oceangoing fixed and floating drilling rigs and other platforms.

(a) No person may operate an oceangoing fixed or floating drilling rig or other platform unless it either—

(1) Complies with the oily-water separating equipment requirements of a valid National Pollutant Discharge Elimination System (NPDES) permit issued in accordance with section 402 of the Clean Water Act and 40 CFR Chapter I;

(2) Complies with the oily-water separating equipment requirements for oceangoing ships of 400 gross tons and above as set forth in either § 155.360 or § 155.370; or

(3) Is not equipped with an installed bilge pumping system for discharge of oily mixtures from platform machinery spaces into the sea and has the capacity to retain on board all of these oily mixtures and is equipped to discharge these mixtures for transport to a reception facility.

(b) When an oceangoing fixed or floating drilling rig or other platform is in a special area, is not proceeding en route, or is within 12 nautical miles of the nearest land; it must either—

(1) Have the capacity to retain on board all machinery space oily mixtures from platform machinery space drainage and be equipped to discharge these mixtures for transport to a reception facility; or

(2) Discharge in accordance with § 151.10 (b)(3), (b)(4), and (b)(5) of this chapter, provided the drilling rig or platform is not within a special area.

(c) Paragraph (b) of this section does not apply to a fixed or floating drilling rig or other platform that is operating under an NPDES permit.

[CGD 75–124a, 48 FR 45715, Oct. 6, 1983, as amended by CGD 88–002, 54 FR 18407, Apr. 28, 1989; CGD 94–056, 60 FR 43378, Aug. 21, 1995; USCG–1998–3799, 63 FR 35531, June 30, 1998]

### § 155.410 Pumping, piping and discharge requirements for non-oceangoing ships of 100 gross tons and above.

(a) No person may operate a non-oceangoing ship of 100 gross tons and above that is fitted with main or auxiliary machinery spaces in the navigable waters of the United States unless:

(1) The ship has at least one pump installed to discharge oily mixtures through a fixed piping system to a reception facility;

(2) The piping system required by this section has at least one outlet that is accessible from the weather deck;

(3) Each outlet required by this section has a shore connection that is compatible with reception facilities in the ship's area of operation; and

(4) The ship has a stop valve for each outlet required by this section.

(b) Paragraph (a) of this section does not apply to a ship that has approved oily-water separating equipment for the processing of oily mixtures from bilges or fuel oil tank ballast.

(c) This section does not apply to a fixed or floating drilling rig or other platform.

[CGD 75–124a, 48 FR 45715, Oct. 6, 1983, as amended by USCG–2000–7641, 66 FR 55572, Nov. 2, 2001]

### § 155.420 Pumping, piping and discharge requirements for oceangoing ships of 100 gross tons and above but less than 400 gross tons.

(a) No person may operate an oceangoing ship of 100 gross tons and above but less than 400 gross tons that is fitted with main or auxiliary machinery spaces unless:

(1) The ship has at least one pump installed to discharge oily mixtures through a fixed piping system to a reception facility;

(2) The piping system required by this section has at least one outlet accessible from the weather deck;

(3) For a ship on an international voyage, the outlet required by this section has a shore connection that meets the specifications in § 155.430, or the ship has at least one adapter that meets the specifications in § 155.430 and fits the required outlets;

(4) For a ship not on an international voyage, the outlet required by this section has a shore connection that is compatible with reception facilities in the ship's area of operation;

(5) The ship has a means on the weather deck near the discharge outlet to stop each pump that is used to discharge oily mixtures; and

(6) The ship has a stop valve installed for each outlet required by this section.

(b) Paragraph (a) of this section does not apply to a ship that has approved oily-water separating equipment for the processing of oily mixtures from bilges or fuel oil tank ballast.

(c) This section does not apply to a fixed or floating drilling rig or other platform.

[CGD 75–124a, 48 FR 45715, Oct. 6, 1983, as amended by USCG–2000–7641, 66 FR 55572, Nov. 2, 2001]

### § 155.430 Standard discharge connections for oceangoing ships of 400 gross tons and above.

(a) All oceangoing ships of 400 gross tons and above must have a standard shore connection for reception facilities to discharge oily mixtures from machinery space bilges or ballast water containing an oily mixture from fuel oil tanks. The discharge connection must have the following dimensions:

(1) Outside diameter=215 millimeters (mm).

(2) Inner diameter=according to pipe outside diameter.

(3) Bolt circle diameter=183 mm.

(4) Slots in flange=6 holes 22 mm in diameter equidistantly placed on a bolt circle of the above diameter, slotted to the flange periphery. The slot width to be 22 mm.

(5) Flange thickness=20 mm.

(6) Bolts and nuts, quantity and number=6 each of 20 mm in diameter and of suitable length.

(b) A portable adapter that meets the specifications of paragraph (a) of this section and that fits the discharge shore connection, for the discharge of oily wastes from machinery space bilges may be substituted for the standard discharge connection requirement of paragraph (a) of this section.

(c) The flange must be designed to accept pipes up to a maximum internal diameter of 125 mm and shall be of steel or other equivalent material having a flat face. This flange, together with a gasket of oilproof material, must be suitable for a service pressure of 6 kilograms/square centimeters (kg/cm$^2$).

[CGD 75–124a, 48 FR 45715, Oct. 6, 1983, as amended by USCG–2000–7641, 66 FR 55572, Nov. 2, 2001]

### § 155.440 Segregation of fuel oil and ballast water on new oceangoing ships of 4,000 gross tons and above, other than oil tankers, and on new oceangoing oil tankers of 150 gross tons and above.

(a) Except as provided for in paragraph (b) of this section, in new oceangoing ships of 4,000 gross tons and above other than oil tankers, and in new oceangoing oil tankers of 150 gross tons and above, ballast water must not be carried in any fuel oil tank.

(b) Where abnormal conditions or the need to carry large quantities of fuel oil render it necessary to carry ballast water that is not a clean ballast in any fuel oil tank, that ballast water must be discharged to reception facilities or into the sea in compliance with part 151 of this chapter using the equipment specified in § 155.370, and an entry shall be made in the Oil Record Book to this effect.

(Approved by the Office of Management and Budget under control number 1625–0009)

[CGD 75–124a, 48 FR 45715, Oct. 6, 1983, as amended by USCG–2006–25150, 71 FR 39210, July 12, 2006]

### § 155.450 Placard.

(a) A ship, except a ship of less than 26 feet in length, must have a placard of at least 5 by 8 inches, made of durable material fixed in a conspicuous place in each machinery space, or at the bilge and ballast pump control station, stating the following:

DISCHARGE OF OIL PROHIBITED

The Federal Water Pollution Control Act prohibits the discharge of oil or oily waste into or upon the navigable waters of the United States, or the waters of the contiguous zone, or which may affect natural resources belonging to, appertaining to, or under the exclusive management authority of the United States, if such discharge causes a film or discoloration of the surface of the water or causes a sludge or emulsion beneath the surface of the water. Violators are subject to substantial civil penalties and/or criminal sanctions including fines and imprisonment.

(b) Existing stocks of placards may be used for the life of the placard.

(c) The placard required by paragraph (a) or (b) of this section must be printed in the language or languages understood by the crew.

[CGD 75–124a, 48 FR 45715, Oct. 6, 1983, as amended by CGD 93–054, 58 FR 62262, Nov. 26, 1993]

### § 155.470 Prohibited spaces.

(a) In a ship of 400 gross tons and above, for which the building contract is placed after January 1, 1982 or, in the absence of a building contract, the keel of which is laid or which is at a similar stage of construction after July 1, 1982, oil or hazardous material must not be carried in a forepeak tank or a tank forward of the collision bulkhead.

(b) A self-propelled ship of 300 gross tons and above, to which paragraph (a) of this section does not apply, may not carry bulk oil or hazardous material in any space forward of a collision bulkhead except:

(1) For a ship constructed after June 30, 1974, fuel oil for use on the ship may be carried in tanks forward of a collision bulkhead, if such tanks are at least 24 inches inboard of the hull structure; or

(2) For a ship constructed before July 1, 1974, fuel oil for use on the ship may be carried in tanks forward of a collision bulkhead, if such tanks were designated, installed, or constructed for fuel oil carriage before July 1, 1974.

[CGD 75–124a, 48 FR 45715, Oct. 6, 1983, as amended by CGD 86–034, 55 FR 36254, Sept. 4, 1990]

### § 155.480 Overfill devices.

(a) For the purposes of this section, ''oil'' has the same definition as provided in § 151.05 of this chapter.

(b) Each tank vessel with a cargo capacity of 1,000 or more cubic meters (approximately 6,290 barrels), loading oil or oil residue as cargo, must have one overfill device that is permanently installed on each cargo tank and meets the requirements of this section.

(1) On a tankship, each cargo tank must be equipped with an overfill device (including an independent audible alarm or visible indicator for that tank) that meets the requirements for tank overfill alarms under 46 CFR 39.20–7(b)(2) and (3), and (d)(1) through (d)(4).

(2) On a tank barge, each cargo tank must be equipped with an overfill device that—

(i) Meets the requirements of 46 CFR 39.20–7(b)(2) and (b)(3) and (d)(1) through (d)(4), and 46 CFR 39.20–9(a)(1) through (a)(3);

(ii) Is an installed automatic shutdown system that meets the requirements of 46 CFR 39.20–9(b); or

(iii) Is an installed high level indicating device that meets the requirements of 46 CFR 39.20–3(b)(1), (b)(2), and (b)(3).

(c) Each cargo tank of a U.S. flag tank vessel must have installed on it an overfill device meeting the requirements of this section at the next scheduled cargo tank internal examination performed on the vessel under 46 CFR 31.10–21.

(d) Each cargo tank of a foreign flag tank vessel must have installed on it an overfill device—

(1) At the first survey that includes dry docking, as required by the vessel's flag administration, to meet the International Convention for the Safety of Life at Sea (SOLAS), 1974, as amended, or the International Load Line Convention of 1966; or

(2) At the first cargo tank internal examination performed on the tank vessel under 46 CFR 31.10–21.

(e) This section does not apply to a tank vessel that does not meet the double hull requirements of § 157.10d of this chapter and, under 46 U.S.C. 3703a(c),

may not operate in the navigable waters or Exclusive Economic Zone of the United States after January 1, 2000.

(f) This section does not apply to tank vessels that carry asphalt, animal fat, or vegetable oil as their only cargo.

[CGD 90–071a, 59 FR 53290, Oct. 21, 1994, as amended by CGD 90–071a, 62 FR 48773, Sept. 17, 1997]

### § 155.490 [Reserved]

## Subpart C—Transfer Personnel, Procedures, Equipment, and Records

### § 155.700 Designation of person in charge.

Each operator or agent of a vessel with a capacity of 250 or more barrels of fuel oil, cargo oil, hazardous material, or liquefied gas as regulated in Table 4 of 46 CFR part 154, or each person who arranges for and hires a person to be in charge of a transfer of fuel oil, of a transfer of liquid cargo in bulk, or of cargo-tank cleaning, shall designate, either by name or by position in the crew, the person in charge (PIC) of each transfer to or from the vessel and of each tank-cleaning.

[CGD 79–116, 62 FR 25126, May 8, 1997]

### § 155.710 Qualifications of person in charge.

(a) On each tankship required to be documented under the laws of the United States, the operator or agent of the vessel, or the person who arranges and hires a person to be in charge either of a transfer of liquid cargo in bulk or of cargo-tank cleaning, shall verify to his or her satisfaction that each person designated as a PIC—

(1) Has sufficient training and experience with the relevant characteristics of the vessel on which he or she is engaged—including the cargo for transfer, the cargo-containment system, the cargo system (including transfer procedures, and shipboard-emergency equipment and procedures), the control and monitoring systems, the procedures for reporting pollution incidents, and, if installed, the Crude-Oil Washing (COW), inert-gas, and vapor-control systems—to safely conduct a transfer of fuel oil, a transfer of liquid cargo in bulk, or cargo-tank cleaning;

(2) Except as provided in paragraph (g) of this section, holds a license or officer endorsement issued under 46 CFR part 10 authorizing service aboard a vessel certified for voyages beyond any Boundary Line described in 46 CFR part 7, except on tankships or self-propelled tank vessels not certified for voyages beyond the Boundary Line; and

(3) Except as provided in paragraph (g) of this section and 46 CFR 13.113 (a) or (c), holds a Tankerman-PIC endorsement issued under 46 CFR part 13 that authorizes the holder to supervise the transfer of fuel oil, the transfer of liquid cargo in bulk, or cargo-tank cleaning, as appropriate to the product.

(b) On each tank barge required to be inspected under 46 U.S.C. 3703, the operator or agent of the vessel, or the person who arranges and hires a person to be in charge of a transfer of fuel oil, of a transfer of liquid cargo in bulk, or of cargo-tank cleaning, shall verify to his or her satisfaction that each PIC—

(1) Has sufficient training and experience with the relevant characteristics of the vessel on which he or she is engaged—including the cargo for transfer, the cargo-containment system, the cargo system (including transfer procedures, and shipboard-emergency equipment and procedures), the control and monitoring systems, the procedures for reporting pollution incidents, and, if installed, the COW, inert-gas, and vapor-control systems—to safely conduct either a transfer of liquid cargo in bulk or cargo-tank cleaning; and

(2) Except as provided in paragraph (g) of this section and 46 CFR part 13.113 (a) or (c), holds a Tankerman-PIC or Tankerman-PIC (Barge) endorsement issued under 46 CFR part 13 that authorizes the holder to supervise the transfer of fuel oil, the transfer of liquid cargo in bulk, or cargo-tank cleaning, as appropriate to the product and vessel.

(c) On each foreign tankship, the operator or agent of the vessel shall verify to his or her satisfaction that each PIC either of a transfer of liquid cargo in bulk or of cargo-tank cleaning—

(1) Has sufficient training and experience with the relevant characteristics of the vessel on which he or she is engaged, including the cargo for transfer, the cargo-containment system, the cargo system (including transfer procedures, and shipboard-emergency equipment and procedures), the control and monitoring systems, the procedures for reporting pollution incidents, and, if installed, the systems for crude-oil washing, inert gas, and vapor control, to safely conduct either a transfer of liquid cargo in bulk or cargo-tank cleaning;

(2) Except as provided in paragraph (g) of this section, holds a license or other document issued by the flag state or its authorized agent authorizing service as master, mate, pilot, engineer, or operator on that vessel;

(3) Except as provided in paragraph (g) of this section, holds a Dangerous-Cargo Endorsement or Certificate issued by a flag state party to the International Convention on Standards of Training, Certification and Watchkeeping for Seafarers, 1978 (STCW), or other form of evidence acceptable to the Coast Guard, attesting the PIC's meeting the requirements of Chapter V of STCW as a PIC of the transfer of fuel oil, of the transfer of liquid cargo in bulk, or of cargo-tank cleaning;

(4) Is capable of reading, speaking, and understanding in English, or a language mutually-agreed-upon with the shoreside PIC of the transfer, all instructions needed to commence, conduct, and complete a transfer of fuel oil, a transfer of liquid cargo in bulk, or cargo-tank cleaning, except that the use of an interpreter meets this requirement if the interpreter—

(i) Fluently speaks the language spoken by each PIC;

(ii) Is immediately available to the PIC on the tankship at all times during the transfer or cargo-tank cleaning; and

(iii) Is knowledgeable about, and conversant with terminology of, ships, transfers, and cargo-tank cleaning; and

(5) Is capable of effectively communicating with all crewmembers involved in the transfer or cargo-tank cleaning, with or without an interpreter.

(d) On each foreign tank barge, the operator or agent of the vessel shall verify to his or her satisfaction that each PIC either of the transfer of liquid cargo in bulk or of cargo-tank cleaning—

(1) Has sufficient training and experience with the relevant characteristics of the vessel on which he or she is engaged—including the cargo for transfer, the cargo-containment system, the cargo system (including transfer procedures, and shipboard-emergency equipment and procedures), the control and monitoring systems, the procedures for reporting pollution incidents, and, if installed, the COW, inert-gas, and vapor-control systems—to safely conduct a transfer of fuel oil, a transfer of liquid cargo in bulk, or cargo-tank cleaning;

(2) Except as provided in paragraph (g) of this section, holds a Dangerous-Cargo Endorsement or Certificate issued by a flag state party to STCW, or other form of evidence acceptable to the Coast Guard, attesting the PIC's meeting the requirements of Chapter V of STCW as a PIC of the transfer of fuel oil, of the transfer of liquid cargo in bulk, or of cargo-tank cleaning;

(3) Is capable of reading, speaking, and understanding in English, or a language mutually-agreed-upon with the shoreside PIC of the transfer, all instructions needed to commence, conduct, and complete a transfer of fuel oil, a transfer of liquid cargo in bulk, or cargo-tank cleaning, except that the use of an interpreter meets this requirement if the interpreter—

(i) Fluently speaks the language spoken by each PIC;

(ii) Is immediately available to the PIC on the tankship at all times during the transfer or cargo-tank cleaning; and

(iii) Is knowledgeable about, and conversant with terminology of, ships, transfers, and cargo-tank cleaning; and

(4) Is capable of effectively communicating with all crewmembers involved in the transfer or cargo-tank cleaning, with or without an interpreter.

(e) The operator or agent of each vessel to which this section applies shall verify to his or her satisfaction that

the PIC of any transfer of fuel oil requiring a Declaration of Inspection—

(1) On each inspected vessel required by 46 CFR chapter I to have an officer aboard, holds a valid license or merchant mariner credential issued under 46 CFR chapter I, subchapter B, authorizing service as a master, mate, pilot, engineer, or operator aboard that vessel, or holds a valid merchant mariner's document or merchant Mariner credential endorsed as Tankerman-PIC;

(2) On each uninspected vessel, either complies with the requirements of paragraph (e)(1) of this section or carries a letter satisfying the requirements of § 155.715 and designating him or her as a PIC, unless equivalent evidence is immediately available aboard the vessel or at his or her place of employment.

(3) On each tank barge, for its own engine-driven pumps, either complies with paragraph (e)(1) or (2) of this section or has been instructed by the operator or agent of the vessel both in his or her duties and in the Federal statutes and regulations on water pollution that apply to the vessel; or

(4) On each foreign vessel, holds a license or certificate issued by a flag state party to STCW, or other form of evidence acceptable to the Coast Guard, attesting the qualifications of the PIC to act as master, mate, pilot, operator, engineer, or tankerman aboard that vessel.

(f) Except as provided in paragraph (g) of this section, the operator or agent of each self-propelled tank vessel carrying oil or hazardous material in bulk shall verify to his or her satisfaction that the PIC of the transfer of oil or hazardous material in bulk to or from a vessel, or of cargo-tank cleaning, holds a Tankerman-PIC endorsement on his or her MMD or merchant mariner credential and either a license, officer endorsement, or a Certificate issued by a flag state party to STCW authorizing service as a master, mate, pilot, engineer, or operator aboard that vessel.

(g) The PIC of a cargo-tank cleaning on a vessel at a tank-cleaning facility or shipyard need not hold any of the merchant mariner credentials, licenses, documents, certificates, or endorsements required in paragraphs (a) through (f) of this section, if he or she is a National Fire Protection Association Certificated Marine Chemist.

[CGD 79–116, 60 FR 17141, Apr. 4, 1995, as amended by CGD 79–116, 61 FR 25126, May 8, 1997; CGD 79–116, 63 FR 35826, July 1, 1998; USCG–2006–24371, 74 FR 11212, Mar. 16, 2009]

### § 155.715 Contents of letter of designation as a person-in-charge of the transfer of fuel oil.

The letter of instruction required in § 155.710(e)(2) must designate the holder as a person-in-charge of the transfer of fuel oil and state that the holder has received sufficient formal instruction from the operator or agent of the vessel to ensure his or her ability to safely and adequately carry out the duties and responsibilities of the PIC described in 33 CFR 156.120 and 156.150.

[CGD 79–116, 63 FR 35826, July 1, 1998]

### § 155.720 Transfer procedures.

The operator of a vessel with a capacity of 250 or more barrels of oil, hazardous material, or liquefied gas as regulated in Table 4 of 46 CFR part 154 shall provide transfer procedures that meet the requirements of this part and part 156 of this chapter for transferring—

(a) To or from the vessel; and

(b) From tank to tank within the vessel.

[CGD 86–034, 55 FR 36254, Sept. 4, 1990, as amended by CGD 79–116, 62 FR 25127, May 8, 1997]

### § 155.730 Compliance with transfer procedures.

The vessel operator of each vessel required by § 155.720 to have transfer procedures shall maintain them current and shall require vessel personnel to use the transfer procedures for each transfer operation.

[CGD 75–124, 45 FR 7175, Jan. 31, 1980, as amended by CGD 86–034, 55 FR 36254, Sept. 4, 1990]

### § 155.740 Availability of transfer procedures.

The transfer procedures required by § 155.720 must be:

(a) Available for inspection by the COTP or OCMI whenever the vessel is in operation;

(b) Legibly printed in a language or languages understood by personnel engaged in transfer operations; and

(c) Permanently posted or available at a place where the procedures can be easily seen and used by members of the crew when engaged in transfer operations.

[CGD 75–124, 45 FR 7175, Jan. 31, 1980, as amended by CGD 86–034, 55 FR 36254, Sept. 4, 1990]

**§ 155.750 Contents of transfer procedures.**

(a) The transfer procedures required by § 155.720 must contain, either in the order listed or by use of a cross-reference index page:

(1) A list of each product transferred to or from the vessel, including the following information:

(i) Generic or chemical name;

(ii) Cargo information as described in § 154.310(a)(5)(ii) of this chapter; and

(iii) Applicability of transfer procedures;

(2) A description of each transfer system on the vessel including:

(i) A line diagram of the vessel's transfer piping, including the location of each valve, pump, control device, vent, and overflow;

(ii) The location of the shutoff valve or other isolation device that separates any bilge or ballast system from the transfer system; and

(iii) A description of and procedures for emptying the discharge containment system required by §§ 155.310 and 155.320;

(3) The number of persons required to be on duty during transfer operations;

(4) The duties by title of each officer, person in charge, tankerman, deckhand, and any other person required for each transfer operation;

(5) Procedures and duty assignments for tending the vessel's moorings during the transfer of oil or hazardous material;

(6) Procedures for operating the emergency shutdown and communications means required by §§ 155.780 and 155.785, respectively;

(7) Procedures for topping off tanks;

(8) Procedures for ensuring that all valves used during the transfer operations are closed upon completion of transfer;

(9) Procedures for reporting discharges of oil or hazardous material into the water; and

(10) Procedures for closing and opening the vessel openings in § 155.815.

(11) Statements explaining that each hazardous materials transfer hose is marked with either the name of each product which may be transferred through the hose or with letters, numbers or other symbols representing all such products and the location in the transfer procedures where a chart or list of the symbols used and a list of the compatible products which may be transferred through the hose can be found for consultation before each transfer.

(b) Exemptions or alternatives granted must be placed in the front of the transfer procedures.

(c) The vessel operator shall incorporate each amendment to the transfer procedures under § 155.760 in the procedures with the related existing requirement, or at the end of the procedures if not related to an existing requirement.

(d) If a vessel is fitted with a vapor control system, the transfer procedures must contain a description of the vapor collection system on the vessel which includes:

(1) A line diagram of the vessel's vapor collection system piping, including the location of each valve, control device, pressure-vacuum relief valve, pressure indicator, flame arresters, and detonation arresters, if fitted;

(2) The location of spill valves and rupture disks, if fitted;

(3) The maximum allowable transfer rate determined in accordance with 46 CFR 39.30–1(d) (1) through (d)(3);

(4) The initial transfer rate for each tank that complies with 46 CFR 39.30–1(h);

(5) A table or graph of transfer rates and corresponding vapor collection system pressure drops calculated in accordance with 46 CFR 39.30–1(b);

(6) The relief settings of each spill valve, rupture disk, and pressure-vacuum relief valve; and

(7) A description of and procedures for operating the vapor collection system, including the:

(i) Pre-transfer equipment inspection requirements;

(ii) Vapor line connection;

(iii) Closed gauging system;

(iv) High level alarm system, if fitted; and

(v) Independent automatic shutdown system, if fitted.

(e) If a cargo tank of a tank vessel is fitted with an overfill device, the transfer procedures must contain a description of the overfill device, including:

(1) The tank overfill device system and specific procedures for the person in charge to—

(i) Monitor the level of cargo in the tank; and

(ii) Shut down transfer operations in time to ensure that the cargo level in each tank does not exceed the maximum amount permitted by § 155.775(b).

(2) Pre-transfer overfill device equipment inspection and test requirements.

(Approved by the Office of Management and Budget under control number 1625–0030)

[CGD 75–124, 45 FR 7175, Jan. 31, 1980, as amended by CGD 88–102, 55 FR 25445, June 21, 1990; CGD 86–034, 55 FR 36254, Sept. 4, 1990; CGD 92–027, 58 FR 39662, July 26, 1993; CGD 90–071a, 59 FR 53291, Oct. 21, 1994; USCG–2006–25150, 71 FR 39210, July 12, 2006]

### § 155.760 Amendment of transfer procedures.

(a) The COTP or OCMI may require the vessel operator of any vessel that is required to have transfer procedures under § 155.720 to amend those procedures if the COTP or OCMI finds that the transfer procedures do not meet the requirements of this part.

(b) The COTP or OCMI shall notify the vessel operator in writing of any inadequacies in the oil transfer procedures. The vessel operator may submit written information, views, and arguments on and proposals for amending the procedures within 14 days from the date of the COTP or OCMI notice. After considering all relevant material presented, the COTP or OCMI shall notify the vessel operator of any amendment required or adopted, or the COTP or OCMI may rescind the notice. The amendment becomes effective 30 days after the vessel operator receives the notice, unless the vessel operator petitions the Commandant to review the COTP or OCMI notice, in which case its effective date is delayed pending a decision by the Commandant. Petitions to the Commandant must be submitted in writing via the COTP or OCMI who issued the requirement to amend.

(c) If the COTP or OCMI finds that there is a condition requiring immediate action to prevent the discharge or risk of discharge that makes the procedure in paragraph (b) of this section impractical or contrary to the public interest, he or she may issue an amendment effective on the date the vessel operator receives notice of it. In such a case, the COTP or OCMI includes a brief statement of the reasons for the findings in the notice, and the vessel operator may petition the Commandant, in any manner, to review the amendment. The petition does not postpone the amendment.

[CGD 75–124, 45 FR 7175, Jan. 31, 1980, as amended by CGD 86–034, 55 FR 36255, Sept. 4, 1990]

### § 155.770 Draining into bilges.

No person may intentionally drain oil or hazardous material from any source into the bilge of a vessel.

[CGD 86–034, 55 FR 36255, Sept. 4, 1990]

### § 155.775 Maximum cargo level of oil.

(a) For the purposes of this section, ''oil'' has the same meaning as provided in § 151.05 of this chapter.

(b) A cargo tank on a tank vessel may not be filled with oil higher than—

(1) 98.5 percent of the cargo tank volume; or

(2) The level at which the overfill alarm required by § 155.480 is set.

[CGD 90–071a, 59 FR 53291, Oct. 21, 1994]

### § 155.780 Emergency shutdown.

(a) A tank vessel with a capacity of 250 or more barrels that is carrying oil or hazardous material as cargo must have on board an emergency means to enable the person in charge of a transfer operation to a facility, to another vessel, or within the vessel to stop the flow of oil or hazardous material.

(b) The means to stop the flow may be a pump control, a quick-acting, power actuated valve, or an operating procedure. If an emergency pump control is used, it must stop the flow of oil or hazardous material if the oil or hazardous material could siphon through the stopped pump.

(c) The means to stop the flow must be operable from the cargo deck, cargo control room, or the usual operating station of the person in charge of the transfer operation.

[CGD 86–034, 55 FR 36255, Sept. 4, 1990]

### § 155.785 Communications.

(a) During vessel to vessel transfers, each tank vessel with a capacity of 250 or more barrels of cargo that is carrying oil or hazardous material must have a means that enables continuous two-way voice communication between the persons in charge of the transfer operations on both vessels.

(b) Each vessel must have a means, which may be the communication system itself, that enables a person on board each vessel to effectively indicate his desire to use the means of communication required by paragraph (a) of this section.

(c) The means required by paragraph (a) of this section must be usable and effective in all phases of the transfer operation and all conditions of weather.

(d) Portable radio devices used to comply with paragraph (a) of this section during the transfer of flammable or combustible liquids must be intrinsically safe, as defined in 46 CFR 110.15–100(i), and meet Class I, Division I, Group D requirements as defined in 46 CFR 111.80.

[CGD 75–124, 45 FR 7175, Jan. 31, 1980; 45 FR 43705, June 30, 1980, as amended by CGD 86–034, 55 FR 36255, Sept. 4, 1990]

### § 155.790 Deck lighting.

(a) A self-propelled vessel with a capacity of 250 or more barrels of oil or hazardous material that is conducting transfer operations between sunset and sunrise must have deck lighting that adequately illuminates—

(1) Each transfer operations work area and each transfer connection point in use on the vessel; and

(2) Each transfer operations work area and each transfer connection point in use on each barge, if any, moored to the vessel to or from which oil or hazardous material is being transferred;

(b) Where the illumination is apparently inadequate the OCMI or COTP may require verification by instrument of the levels of illumination. On a horizontal plane 3 feet above the deck the illumination must measure at least:

(1) 5.0 foot candles at transfer connection points; and

(2) 1.0 foot candle in transfer operations work areas.

(c) Lighting must be located or shielded so as not to mislead or otherwise interfere with navigation on the adjacent waterways.

[CGD 75–124, 45 FR 7175, Jan. 31, 1980, as amended by CGD 86–034, 55 FR 36255, Sept. 4, 1990]

### § 155.800 Transfer hose.

Hose used to transfer oil or hazardous material must meet the requirements of § 154.500 of this chapter.

[CGD 75–124, 45 FR 7175, Jan. 31, 1980, as amended by CGD 86–034, 55 FR 36255, Sept. 4, 1990]

### § 155.805 Closure devices.

(a) Each end of each transfer hose on board which is not connected for the transfer of oil or hazardous material must be blanked off with butterfly valves, wafer-type resilient seated valves, blank flanges, or other means acceptable to the COTP or OCMI.

(b) New, unused hose is exempt from the requirement in paragraph (a) of this section.

[CGD 75–124, 45 FR 7175, Jan. 31, 1980, as amended by CGD 86–034, 55 FR 36255, Sept. 4, 1990]

### § 155.810 Tank vessel security.

Operators of tank vessels carrying more oil cargo residue than normal in any cargo tank must assign a surveillance person or persons responsible for maintaining standard vessel security.

[ USCG–2000–7641, 66 FR 55572, Nov. 2, 2001]

### § 155.815 Tank vessel integrity.

(a) Except as provided in paragraph (b) of this section, a tank vessel underway or at anchor must have all closure mechanisms on the following openings properly closed:

(1) Expansion trunk hatches;

(2) Ullage openings;

(3) Sounding ports;

(4) Tank cleaning openings; and

(5) Any other tank vessel openings that maintain the seaworthy condition of the tank vessel and prevent the inadvertent release of oil or hazardous material in the event of a tank vessel accident.

(b) No person may open any of the closure mechanisms in paragraph (a) of this section while the tank vessel is underway or at anchor except when authorized and supervised by a licensed or credentialed officer or the tankerman required by 46 CFR 31.15–5(a).

[CGD 75–124, 45 FR 7175, Jan. 31, 1980, as amended by CGD 86–034, 55 FR 36255, Sept. 4, 1990; USCG–2006–24371, 74 FR 11212, Mar. 16, 2009]

### § 155.820 Records.

The vessel operator shall keep a written record available for inspection by the COTP or OCMI of:

(a) The name of each person currently designated as a person in charge of transfer operations.

(b) The date and result of the most recent test and inspection of each item tested or inspected as required by § 156.170 of this chapter;

(c) The hose information required by § 154.500(e) and (g) of this chapter unless that information is marked on the hose; and

(d) The Declaration of Inspection as required by § 156.150(f) of this chapter.

[CGD 75–124, 45 FR 7175, Jan. 31, 1980, as amended by CGD 86–034, 55 FR 36255, Sept. 4, 1990]

## Subpart D—Tank Vessel Response Plans for Oil

SOURCE: CGD 91–034, 61 FR 1081, Jan. 12, 1996, unless otherwise noted.

### § 155.1010 Purpose.

The purpose of this subpart is to establish requirements for oil spill response plans for certain vessels. The planning criteria in this subpart are intended for use in response plan development and the identification of resources necessary to respond to the oil spill scenarios prescribed during the planning process. The development of a response plan prepares the vessel owner or operator and the vessel's crew to respond to an oil spill. The specific criteria for response resources and their arrival times are not performance standards. They are planning criteria based on a set of assumptions that may not exist during an actual oil spill incident.

### § 155.1015 Applicability.

(a) Except as provided in paragraph (c) of this section, this subpart applies to each vessel that is constructed or adapted to carry, or that carries, oil in bulk as cargo or oil cargo residue, and that—

(1) Is a vessel of the United States;

(2) Operates on the navigable waters of the United States; or

(3) Transfers oil in a port or place subject to the jurisdiction of the United States.

(b) This subpart also applies to vessels which engage in oil lightering operations in the marine environment beyond the baseline from which the territorial sea is measured, when the cargo lightered is destined for a port or place subject to the jurisdiction of the United States.

(c) This subpart does not apply to the following types of vessels:

(1) Public vessels and vessels deemed public vessels under 14 U.S.C. 827.

(2) Vessels that, although constructed or adapted to carry oil in bulk as cargo or oil cargo residue, are not storing or carrying oil in bulk as cargo or oil cargo residue.

(3) Dedicated response vessels when conducting response operations.

(4) Vessels of opportunity when conducting response operations in a response area.

(5) Offshore supply vessels as defined in 46 U.S.C. 2101.

(6) Fishing or fishing tender vessels as defined in 46 U.S.C. 2101 of not more than 750 gross tons when engaged only in the fishing industry.

(7) Foreign flag vessels engaged in innocent passage.

(d) Vessels covered by this subpart that are not operating within the navigable waters or the exclusive economic zone of the United States must meet all requirements of this subpart except for—

(1) Identifying and ensuring, through contract or other approved means, the

availability of response resources including the shore-based spill management team;

(2) Providing the geographic-specific appendices required in § 155.1035, 155.1040, or 155.1045, as appropriate; and

(3) Identifying and designating a qualified individual and alternate qualified individual required in § 155.1026.

[CGD 91–034, 61 FR 1081, Jan. 12, 1996, as amended by USCG–2000–7641, 66 FR 55572, Nov. 2, 2001]

### § 155.1020 Definitions.

Except as otherwise defined in this section, the definitions in § 155.110 apply to this subpart and subparts F and G of this part. For the purposes of this subpart only, the term:

*Adverse weather* means the weather conditions that will be considered when identifying response systems and equipment in a response plan for the applicable operating environment. Factors to consider include, but are not limited to, significant wave height, ice, temperature, weather-related visibility, and currents within the Captain of the Port (COTP) zone in which the systems or equipment are intended to function.

*Animal fat* means a non-petroleum oil, fat, or grease derived from animals and not specifically identified elsewhere in this part.

*Average most probable discharge* means a discharge of the lesser of 50 barrels of oil or 1 percent of the cargo from the vessel during cargo oil transfer operations to or from the vessel.

*Bulk* means any volume of oil carried in an integral tank of the vessel and oil transferred to or from a marine portable tank or independent tank while on board a vessel.

*Captain of the Port (COTP) Zone* means a zone specified in 33 CFR part 3 and, for coastal ports, the seaward extension of that zone to the outer boundary of the exclusive economic zone (EEZ).

*Cargo* means oil that is transported to and off-loaded at a destination by a vessel. It does not include—

(1) Oil carried in integral tanks, marine portable tanks, or independent tanks for use by machinery, helicopters, and boats carried aboard the vessel, or for use by helicopters that are directly supporting the vessel's primary operations; or

(2) Oil transferred from a towing vessel to a vessel in its tow to operate installed machinery other than the propulsion plant.

*Contract or other approved means* includes—

(1) A written contractual agreement between a vessel owner or operator and an oil spill removal organization. The agreement must identify and ensure the availability of specified personnel and equipment required under this subpart within stipulated response times in the specified geographic areas;

(2) Certification by the vessel owner or operator that specified personnel and equipment required under this subpart are owned, operated, or under the direct control of the vessel owner or operator, and are available within stipulated response times in the specified geographic areas;

(3) Active membership in a local or regional oil spill removal organization that has identified specified personnel and equipment required under this subpart that are available to respond to a discharge within stipulated response times in the specified geographic areas;

(4) A document which—

(i) Identifies the personnel, equipment, and services capable of being provided by the oil spill removal organization within stipulated response times in the specified geographic areas;

(ii) Sets out the parties' acknowledgment that the oil spill removal organization intends to commit the resources in the event of a response;

(iii) Permits the Coast Guard to verify the availability of the identified response resources through tests, inspections, and exercises; and

(iv) Is referenced in the response plan; or

(5) With the written consent of the oil spill removal organization, the identification of an oil spill removal organization with specified equipment and personnel which are available within stipulated response times in the specified geographic areas. This paragraph is an other approved means for only—

(i) A vessel carrying oil as secondary cargo to meet the requirements under §155.1045(i)(3);

(ii) A barge operating on rivers and canals to meet the requirements for lightering capability under §§155.1050(j), 155.1052(g), 155.1230(g), and 155.2230(g);

(iii) A vessel to meet the salvage and firefighting requirements in §§155.1050(j), 155.1052(f), 155.1230(f), and 155.2230(f); and

(iv) A vessel to meet the resource requirements in §155.1052(c), 155.1230(c), and 155.2230(c).

*Dedicated response vessel* means a vessel of which the service is limited exclusively to oil and hazardous substance spill response-related activities, including spill recovery and transport, tanker escorting, deployment of spill response equipment, supplies, and personnel, and spill response-related training, testing, exercises, and research.

*Dispersant-application platform* means the vessel or aircraft outfitted with the dispersant-application equipment acting as the delivery system for the dispersant onto the oil spill.

*Dispersant Mission Planner 2 (DMP2)* means an Internet-downloadable application that estimates EDAC for different dispersant response systems. The NSFCC will use DPMP2 for evaluating OSRO dispersant classification levels.

*Effective daily application capacity* or *EDAC* means the estimated amount of dispersant that can be applied to a discharge by an application system, given the availability of supporting dispersant stockpiles, when operated in accordance with approved standards and within acceptable environmental conditions.

*Exclusive economic zone* means the zone contiguous to the territorial sea of United States extending to a distance up to 200 nautical miles from the baseline from which the breadth of the territorial sea is measured.

*Great Lakes* means Lakes Superior, Michigan, Huron, Erie, and Ontario, their connecting and tributary waters, the Saint Lawrence River as far as Saint Regis, and adjacent port areas.

*Gulf Coast* means for the purposes of dispersant application requirements, the regions encompassing the following Captain of the Port Zones:

(1) Corpus Christi, TX;

(2) Houston/Galveston, TX;

(3) Port Arthur, TX;

(4) Morgan City, LA;

(5) New Orleans, LA;

(6) Mobile, AL; and

(7) St. Petersburg, FL.

*Higher volume port area* means the following areas, including any water area within 50 nautical miles seaward of the entrance(s) to the specified port:

(1) Boston, MA.

(2) New York, NY.

(3) Delaware Bay and River to Philadelphia, PA.

(4) St. Croix, VI.

(5) Pascagoula, MS.

(6) Mississippi River from Southwest Pass, LA to Baton Rouge, LA. Note: Vessels destined for, departing from, or offloading at the Louisiana Offshore Oil Port are not considered to be operating in this higher volume port area.

(7) Lake Charles, LA.

(8) Sabine-Neches River, TX.

(9) Galveston Bay and Houston Ship Channel, TX.

(10) Corpus Christi, TX.

(11) Los Angeles/Long Beach Harbor, CA.

(12) San Francisco Bay, San Pablo Bay, Carquinez Strait, and Suisun Bay to Antioch, CA.

(13) Strait of Juan De Fuca at Port Angeles, WA to and including Puget Sound, WA.

(14) Prince William Sound, AK.

*Inland area* means the area shoreward of the boundary lines defined in 46 CFR part 7, except that in the Gulf of Mexico, it means the area shoreward of the lines of demarcation (COLREG lines) as defined in §§80.740 through 80.850 of this chapter. The inland area does not include the Great Lakes.

*Maximum extent practicable* means the planned capability to respond to a worst case discharge in adverse weather, as contained in a response plan that meets the criteria in this subpart or in a specific plan approved by the Coast Guard.

*Maximum most probable discharge* means a discharge of—

(1) 2,500 barrels of oil for vessels with an oil cargo capacity equal to or greater than 25,000 barrels; or

(2) 10% of the vessel's oil cargo capacity for vessels with a capacity of less than 25,000 barrels.

*Nearshore area* means the area extending seaward 12 miles from the boundary lines defined in 46 CFR part 7, except in the Gulf of Mexico. In the Gulf of Mexico, a nearshore area is one extending seaward 12 miles from the line of demarcation (COLREG lines) as defined in §§ 80.740 through 80.850 of this chapter.

*Non-persistent or Group I oil* means a petroleum-based oil that, at the time of shipment, consists of hydrocarbon fractions—

(1) At least 50% of which by volume, distill at a temperature of 340 degrees C (645 degrees F); and

(2) At least 95% of which by volume, distill at a temperature of 370 degrees C (700 degrees F).

*Non-petroleum oil* means oil of any kind that is not petroleum-based. It includes, but is not limited to, animal fats and vegetable oils.

*Ocean* means the open ocean, offshore area, and nearshore area as defined in this subpart.

*Offshore area* means the area up to 38 nautical miles seaward of the outer boundary of the nearshore area.

*Oil field waste* means non-pumpable drilling fluids with possible trace amounts of metal and oil.

*Oil spill removal organization (OSRO)* means an entity that provides oil spill response resources.

*On-scene coordinator or OSC* means the Federal official predesignated by the Coast Guard or Environmental Protection Agency to coordinate and direct Federal removal efforts at the scene of an oil or hazardous substance discharge as prescribed in the National Oil and Hazardous Substances Pollution Contingency Plan (National Contingency Plan) as published in 40 CFR part 300.

*Open ocean* means the area from 38 nautical miles seaward of the outer boundary of the nearshore area, to the seaward boundary of the exclusive economic zone.

*Operating in compliance with the plan* means operating in compliance with the provisions of this subpart, including ensuring the availability of the response resources by contract or other approved means and conducting the necessary training and exercises.

*Operational effectiveness monitoring* means monitoring concerned primarily with determining whether the dispersant was properly applied and how the dispersant is affecting the oil.

*Operator* means person who is an owner, a demise charterer, or other contractor, who conducts the operation of, or who is responsible for the operation of a vessel. For the purposes of this subpart only, the operator of a towing vessel is not, per se, considered the operator of a vessel being towed.

*Other non-petroleum oil* means an oil of any kind that is not a petroleum oil, an animal fat, or a vegetable oil.

*Owner or vessel owner* means any person holding legal or equitable title to a vessel; provided, however, that a person holding legal or equitable title to a vessel solely as security is not the owner. In a case where a Certificate of Documentation has been issued, the owner is the person or persons whose name or names appear on the vessel's Certificate of Documentation provided, however, that where a Certificate of Documentation has been issued in the name of a president or secretary of an incorporated company, such incorporated company is the owner.

*Persistent oil* means a petroleum-based oil that does not meet the distillation criteria for a non-persistent oil. For the purposes of this subpart, persistent oils are further classified based on specific gravity as follows:

(1) Group II—specific gravity of less than .85.

(2) Group III—specific gravity equal to or greater than .85 and less than .95.

(3) Group IV—specific gravity equal to or greater than .95 and less than or equal to 1.0.

(4) Group V—specific gravity greater than 1.0.

*Petroleum oil* means petroleum in any form, including but not limited to, crude oil, fuel oil, sludge, oil residue, and refined products.

*Pre-authorization for dispersant use* means an agreement, adopted by a regional response team in coordination with area committees, that authorizes the use of dispersants at the discretion of the Federal On-Scene Coordinator without the further approval of other

Federal or State authorities. These pre-authorization areas are generally limited to particular geographic areas within each region.

*Primary dispersant staging site* means a site designated within a Captain of the Port zone which is identified as a forward staging area for dispersant-application platforms and the loading of dispersant stockpiles. Primary staging sites would normally be the planned location where the platform would load or reload dispersants prior to departing for application at the site of the discharge and may not be the location where dispersant stockpiles are stored or application platforms are home based.

*Qualified individual and alternate qualified individual* means a shore-based representative of a vessel owner or operator who meets the requirements of 33 CFR 155.1026.

*Response activity* means the containment and removal of oil from the water and shorelines, the temporary storage and disposal of recovered oil, or the taking of other actions as necessary to minimize or mitigate damage to public health or welfare or the environment.

*Response resources* means the personnel, equipment, supplies, and other capability necessary to perform the response activities identified in a response plan.

*Rivers and canals* mean bodies of water confined within the inland area, including the Intracoastal Waterways and other waterways artificially created for navigation, that have a project depth of 12 feet or less.

*Secondary Cargo* (see Vessels Carrying Oil as a Secondary Cargo)

*Specific gravity* means the ratio of the mass of a given volume of liquid at 15 degrees C (60 degrees F) to the mass of an equal volume of pure water at the same temperature.

*Spill management team* means the personnel identified to staff the organizational structure identified in a response plan to manage response plan implementation.

*Substantial threat of such a discharge* means any incident involving a vessel that may create a significant risk of discharge of cargo oil. Such incidents include, but are not limited to, groundings, strandings, collisions, hull damage, fire, explosion, loss of propulsion, flooding, on-deck spills, or other similar occurrences.

*Tanker* means a self-propelled tank vessel constructed or adapted primarily to carry oil or hazardous material in bulk in the cargo spaces.

*Tier* means the combination of required response resources and the times within which the resources must arrive on scene. Appendix B of this part, especially Tables 5 and 6, provide specific guidance on calculating the response resources required by each tier. Sections 155.1050(g), 155.1135, 155.1230(d), and 155.2230(d) set forth the required times within which the response resources must arrive on scene. Tiers are applied in three categories:

(1) Higher volume port areas;

(2) The Great Lakes; and

(3) All other operating environments, including rivers and canals, inland, nearshore, and offshore areas.

*Vegetable oil* means a non-petroleum oil or fat not specifically identified elsewhere in this part that is derived from plant seeds, nuts, kernels or fruits.

*Vessel of opportunity* means a vessel engaged in spill response activities that is normally and substantially involved in activities other than spill response and not a vessel carrying oil as a primary cargo.

*Vessels carrying oil as a primary cargo* means all vessels except dedicated response vessels carrying oil in bulk as cargo or cargo residue that have a Certificate of Inspection issued under 46 CFR Chapter I, subchapter D.

*Vessels carrying oil as a secondary cargo* means vessels, other than vessels carrying oil as a primary cargo, carrying oil in bulk as cargo or cargo residue pursuant to a permit issued under 46 CFR 30.01–5, 70.05–30, or 90.05–35, an International Oil Pollution Prevention (IOPP) or Noxious Liquid Substance (NLS) certificate required by 33 CFR §§151.33 or 151.35; or any uninspected vessel that carries oil in bulk as cargo or cargo residue.

*Worst case discharge* means a discharge in adverse weather conditions of a vessel's entire oil cargo.

[CGD 91–034, 61 FR 1081, Jan. 12, 1996, as amended by USCG–2000–7641, 66 FR 55572, Nov. 2, 2001; USCG–1998–3417, 73 FR 80649, Dec. 31, 2008; USCG–2001–8661, 74 FR 45026, Aug. 31, 2009; USCG–2010–0351, 75 FR 36285, June 25, 2010]

### § 155.1025 Operating restrictions and interim operating authorization.

(a) Vessels subject to this subpart may not perform the following functions, unless operating in compliance with a plan approved under § 155.1065:

(1) Handling, storing, or transporting oil on the navigable waters of the United States; or

(2) Transferring oil in any other port or place subject to U.S. jurisdiction.

(b) Vessels subject to this subpart may not transfer oil in a port or place subject to the jurisdiction of the United States, where the oil to be transferred was received from another vessel subject to this subpart during a lightering operation referred to in § 155.1015(b), unless both vessels engaged in the lightering operation were operating at the time in compliance with a plan approved under § 155.1065.

(c)(1) Notwithstanding the requirements of paragraph (a) of this section, a vessel may continue to handle, store, transport, transfer, or lighter oil for 2 years after the date of submission of a response plan pending approval of that plan, if the vessel owner or operator has received written authorization for continued operations from the Coast Guard.

(2) To receive this authorization, the vessel owner or operator must certify in writing to the Coast Guard that the owner or operator has identified and ensured the availability of, through contract or other approved means, the necessary private response resources to respond, to the maximum extent practicable, to a worst case discharge or substantial threat of such a discharge from their vessel as described in §§ 155.1050, 155.1052, 155.1230, or 155.2230, as appropriate.

(d) With respect to paragraph (b) of this section, a vessel may not continue to handle, store, transport, transfer, or lighter oil if—

(1) The Coast Guard determines that the response resources identified in the vessel's certification statement do not meet the requirements of this subpart;

(2) The contracts or agreements cited in the vessel's certification statement are no longer valid;

(3) The vessel is not operating in compliance with the submitted plan; or

(4) The period of this authorization expires.

(e) An owner or operator of a vessel may be authorized by the applicable COTP to have that vessel make one voyage to transport or handle oil in a geographic specific area not covered by the vessel's response plan. All requirements of this subpart must be met for any subsequent voyages to that geographic specific area. To be authorized, the vessel owner or operator shall certify to the COTP in writing, prior to the vessel's entry into the COTP zone, that—

(1) A response plan meeting the requirements of this subpart (except for the applicable geographic specific appendix) or a shipboard oil pollution emergency plan approved by the flag state that meets the requirements of Regulation 37 of Annex I to the International Convention for the Prevention of Pollution from Ships, 1973 as modified by the Protocol of 1978 relating thereto, as amended (MARPOL 73/78);

(2) The approved response plan or the required plan section(s) is aboard the vessel;

(3) The vessel owner or operator has identified and informed the vessel master and the COTP of the designated qualified individual prior to the vessel's entry into the COTP zone; and

(4) The vessel owner or operator has identified and ensured the availability of, through contract or other approved means, the private response resources necessary to respond, to the maximum extent practicable under the criteria in §§ 155.1050, 155.1052, 155.1230, or 155.2230, as appropriate, to a worst case discharge or substantial threat of discharge from the vessel in the applicable COTP zone.

[CGD 91–034, 61 FR 1081, Jan. 12, 1996, as amended by USCG–2008–0179, 73 FR 35015, June 19, 2008]

**§ 155.1026 Qualified individual and alternate qualified individual.**

(a) The response plan must identify a qualified individual and at least one alternate who meet the requirements of this section. The qualified individual or alternate qualified individual must be available on a 24-hour basis.

(b) The qualified individual and alternate must—

(1) Speak fluent English;

(2) Except as set out in paragraph (c) of this section, be located in the United States;

(3) Be familiar with the implementation of the vessel response plan; and

(4) Be trained in the responsibilities of the qualified individual under the response plan.

(c) For Canadian flag vessels while operating on the Great Lakes or the Strait of Juan de Fuca and Puget Sound, WA, the qualified individual may be located in Canada if he or she meets all other requirements in paragraph (b) of this section.

(d) The owner operator shall provide each qualified individual and alternate qualified individual identified in the plan with a document designating them as a qualified individual and specifying their full authority to—

(1) Activate and engage in contracting with oil spill removal organization(s) and other response related resources identified in the plan;

(2) Act as a liaison with the predesignated Federal On-Scene Coordinator (OCS); and

(3) Obligate funds required to carry out response activities.

(e) The owner or operator of a vessel may designate an organization to fulfill the role of the qualified individual and alternate qualified individual. The organization must then identify a qualified individual and at least one alternate qualified individual who meet the requirements of this section. The vessel owner or operator is required to list in the response plan the organization, the person identified as the qualified individual, and the person or persons identified as the alternate qualified individual(s).

(f) The qualified individual is not responsible for—

(1) The adequacy of response plans prepared by the owner or operator; or

(2) Contracting or obligating funds for response resources beyond the full authority contained in their designation from the owner or operator of the vessel.

(g) The liability of a qualified individual is considered to be in accordance with the provisions of 33 U.S.C. 1321(c)(4).

**§ 155.1030 General response plan requirements.**

(a) The plan must cover all geographic areas of the United States in which the vessel intends to handle, store, or transport oil, including port areas and offshore transit areas.

(b) The plan must be written in English and, if applicable, in a language that is understood by the crew members with responsibilities under the plan.

(c) A vessel response plan must be divided into the following sections:

(1) General information and introduction.

(2) Notification procedures.

(3) Shipboard spill mitigation procedures.

(4) Shore-based response activities.

(5) List of contacts.

(6) Training procedures.

(7) Exercise procedures.

(8) Plan review and update procedures.

(9) On board notification checklist and emergency procedures (unmanned tank barges only).

(10) Geographic-specific appendix for each COTP zone in which the vessel or vessels operate.

(11) An appendix for vessel-specific information for the vessel or vessels covered by the plan.

(d) A vessel owner or operator with multiple vessels may submit one plan for each class of vessel (*i.e.*, manned vessels carrying oil as primary cargo, unmanned vessels carrying oil as primary cargo, and vessels carrying oil as secondary cargo) with a separate vessel-specific appendix for each vessel covered by the plan and a separate geographic-specific appendix for each COTP zone in which the vessel(s) will operate.

(e) The required contents for each section of the plan are contained in

§§ 155.1035, 155.1040, and 155.1045, as applicable to the type or service of the vessel.

(f) The response plan for a barge carrying nonhazardous oil field waste may follow the same format as that for a vessel carrying oil as a secondary cargo under § 155.1045 in lieu of the plan required under § 155.1035 or § 155.1040.

(g) A response plan must be divided into the sections described in paragraph (c) of this section unless the plan is supplemented with a cross-reference table to identify the location of the information required by this subpart.

(h) The information contained in a response plan must be consistent with the—

(1) National Oil and Hazardous Substances Pollution Contingency Plan (NCP) (40 CFR part 300) and the Area Contingency Plan(s) (ACP) in effect on the date 6 months prior to the submission date of the response plan; or

(2) More recent NCP and ACP(s).

(i) Copies of the submitted and approved response plan must be available as follows:

(1) The owner or operator of all vessels, except for unmanned tank barges, shall ensure that one English language copy of the plan sections listed in paragraph (c) (1), (2), (3), (5), (10) and (11) of this section and the Coast Guard approval letter or notarized copy of the approval letter are maintained aboard the vessel. If applicable, additional copies of the required plan sections must be in the language understood by crew members with responsibilities under the plan and maintained aboard the vessel.

(2) The owner or operator of all unmanned tank barges shall ensure that one English language copy of the plan section listed in paragraph (c)(9) of this section and the Coast Guard approval letter or notarized copy of the approval letter are maintained aboard the barge.

(3) The vessel owner or operator shall maintain a current copy of the entire plan, and ensure that each person identified as a qualified individual and alternate qualified individual in the plan has a current copy of the entire plan.

(j) If an owner or operator of a United States flag vessel informs the Coast Guard in writing at the time of the plan submission according to the procedures of § 155.1065, the owner or operator may address the provisions of Regulation 37 of MARPOL 73/78 if the owner or operator—

(1) Develops a vessel response plan under § 155.1030 and §§ 155.1035, 155.1040, or 155.1045, as applicable;

(2) Expands the plan to cover discharges of all oils defined under MARPOL, including fuel oil (bunker) carried on board. The owner or operator is not required to include these additional oils in calculating the planning volumes that are used to determine the quantity of response resources that the owner or operator must ensure through contract or other approved means;

(3) Provides the information on authorities or persons to be contacted in the event of an oil pollution incident as required by Regulation 37 of MARPOL 73/78. This information must include—

(i) An appendix containing coastal State contacts for those coastal States the exclusive economic zone of which the vessel regularly transits. The appendix should list those agencies or officials of administrations responsible for receiving and processing pollution incident reports; and

(ii) An appendix of port contacts for those ports at which the vessel regularly calls; and

(4) Expands the plan to include the procedures and point of contact on the ship for coordinating shipboard activities with national and local authorities in combating an oil spill incident. The plan should address the need to contact the coastal State to advise them of action(s) being implemented and determine what authorization(s), if any, are needed.

(5) Provides a cross reference section to identify the location of the information required by § 155.1030(j).

(k) A vessel carrying oil as a secondary cargo may comply with the requirements of § 155.1045 by having a response plan approved under Regulation 37 of MARPOL 73/78 with the addition of the following—

(1) Identification of the qualified individual and alternate that meets the requirements of § 155.1026;

(2) A geographic specific appendix meeting the requirements of § 155.1045(i), including the identification

of a contracted oil spill removal organization;

(3) Identification of a spill management team;

(4) An appendix containing the training procedures required by 155.1045(f); and

(5) An appendix containing the exercise procedures required by 155.1045(g).

(l) For plans submitted prior to the effective date of this final rule, the owner or operator of each vessel may elect to comply with any or all of the provisions of this final rule by amending or revising the appropriate section of the previously submitted plan.

[CGD 91–034, 61 FR 1081, Jan. 12, 1996, as amended by USCG–2008–0179, 73 FR 35015, June 19, 2008]

### § 155.1035 Response plan requirements for manned vessels carrying oil as a primary cargo.

(a) *General information and introduction.* This section of the response plan must include—

(1) The vessel's name, country of registry, call sign, official number, and International Maritime Organization (IMO) international number (if applicable). If the plan covers multiple vessels, this information must be provided for each vessel;

(2) The name, address, and procedures for contacting the vessel's owner or operator on a 24-hour basis;

(3) A list of the COTP zones in which the vessel intends to handle, store, or transport oil;

(4) A table of contents or index of sufficient detail to permit personnel with responsibilities under the response plan to locate the specific sections of the plan; and

(5) A record of change(s) page to record information on plan reviews, updates or revisions.

(b) *Notification procedures.* This section of the response plan must include the following notification information:

(1) A checklist with all notifications, including telephone or other contact numbers, in order of priority to be made by shipboard or shore-based personnel and the information required for those notifications. Notifications must include those required by—

(i) MARPOL 73/78 and 33 CFR part 153; and

(ii) Any applicable State.

(2) Identification of the person(s) to be notified of a discharge or substantial threat of a discharge of oil. If the notifications vary due to vessel location, the persons to be notified also must be identified in a geographic-specific appendix. This section must separately identify—

(i) The individual(s) or organization(s) to be notified by shipboard personnel; and

(ii) The individual(s) or organization(s) to be notified by shore-based personnel.

(3) The procedures for notifying the qualified individual(s) designated by the vessel's owner or operator.

(4) Descriptions of the primary and, if available, secondary communications methods by which the notifications will be made that should be consistent with the regulations in § 155.1035(b)(1).

(5) The information that is to be provided in the initial and any follow up notifications required by paragraph (b)(1) of this section.

(i) The initial notification may be submitted in accordance with IMO Resolution A648(16) ''General Principles for Ship Reporting Systems and Ship Reporting Requirements'' which is available through the Office of Operating and Environmental Standards (CG–522), U.S. Coast Guard Headquarters, 2100 2nd St., SW., Stop 7126, Washington, DC 20593–7126. It must include at least the following information:

(A) Vessel name, country of registry, call sign, and official number (if any);

(B) Date and time of the incident;

(C) Location of the incident;

(D) Course, speed, and intended track of vessel;

(E) Radio station(s) and frequencies guarded;

(F) Date and time of next report;

(G) Type and quantity of oil on board;

(H) Nature and detail of defects, deficiencies, and damage (e.g. grounding, collision, hull failure, etc.);

(I) Details of pollution, including estimate of oil discharged or threat of discharge;

(J) Weather and sea conditions on scene;

(K) Ship size and type;

(L) Actions taken or planned by persons on scene;

(M) Current conditions of the vessel; and

(N) Number of crew and details of injuries, if any.

(ii) After the transmission of the initial notification, as much as possible of the information essential for the protection of the marine environment as is appropriate to the incident must be reported to the appropriate on-scene coordinator in a follow-up report. This information must include—

(A) Additional details on the type of cargo on board;

(B) Additional details on the condition of the vessel and ability to transfer cargo, ballast, and fuel;

(C) Additional details on the quantity, extent and movement of the pollution and whether the discharge is continuing;

(D) Any changes in the on-scene weather or sea conditions; and

(E) Actions being taken with regard to the discharge and the movement of the ship.

(6) Identification of the person(s) to be notified of a vessel casualty potentially affecting the seaworthiness of a vessel and the information to be provided by the vessel's crew to shore-based personnel to facilitate the assessment of damage stability and stress.

(c) *Shipboard spill mitigation procedures*. This section of the response plan must include—

(1) Procedures for the crew to mitigate or prevent any discharge or a substantial threat of such discharge of oil resulting from shipboard operational activities associated with internal or external cargo transfers. Responsibilities of vessel personnel should be identified by job title. These procedures must address personnel actions in the event of a—

(i) Transfer system leak;

(ii) Tank overflow; or

(iii) Suspected cargo tank or hull leak;

(2) Procedures in the order of priority for the crew to mitigate or prevent any discharge or a substantial threat of such a discharge in the event of the following casualties or emergencies:

(i) Grounding or stranding.

(ii) Collision.

(iii) Explosion or fire, or both.

(iv) Hull failure.

(v) Excessive list.

(vi) Equipment failure (e.g. main propulsion, steering gear, etc.);

(3) Procedures for the crew to deploy discharge removal equipment as required under subpart B of this part;

(4) The procedures for internal transfers of cargo in an emergency;

(5) The procedures for ship-to-ship transfers of cargo in an emergency:

(i) The format and content of the ship-to-ship transfer procedures must be consistent with the Ship to Ship Transfer Guide (Petroleum) (incorporated by reference; see §155.140) published jointly by the International Chamber of Shipping and the Oil Companies International Marine Forum (OCIMF).

(ii) The procedures must identify the response resources necessary to carry out the transfers, including—

(A) Fendering equipment (ship-to-ship only);

(B) Transfer hoses and connection equipment;

(C) Portable pumps and ancillary equipment;

(D) Lightering and mooring masters (ship-to-ship only); and

(E) Vessel and barge brokers (ship-to-ship only).

(iii) Reference can be made to a separate oil transfer procedure and lightering plan carried aboard the vessel, provided that safety considerations are summarized in the response plan.

(iv) The location of all equipment and fittings, if any, carried aboard the vessel to perform such transfers must be identified;

(6) The procedures and arrangements for emergency towing, including the rigging and operation of any emergency towing equipment, including that required by subpart B of this part, aboard the vessel;

(7) The location, crew responsibilities, and procedures for use of shipboard equipment which may be carried to mitigate an oil discharge;

(8) The crew responsibilities, if any, for recordkeeping and sampling of spilled oil. Any requirements for sampling must address safety procedures to be followed by the crew;

(9) The crew's responsibilities, if any, to initiate a response and supervise shore-based response resources;

(10) Damage stability and hull stress considerations when performing shipboard mitigation measures. This section must identify and describe—

(i) Activities in which the crew is trained and qualified to execute absent shore-based support or advice; and

(ii) The information to be collected by the vessel's crew to facilitate shore-based assistance; and

(11)(i) Location of vessel plans necessary to perform salvage, stability, and hull stress assessments. A copy of these plans must be maintained ashore by either the vessel owner or operator or the vessel's recognized classification society unless the vessel has prearranged for a shore-based damage stability and residual strength calculation program with the vessel's baseline strength and stability characteristics pre-entered. The response plan must indicate the shore location and 24-hour access procedures of the calculation program or the following plans:

(A) General arrangement plan.

(B) Midship section plan.

(C) Lines plan or table of offsets.

(D) Tank tables.

(E) Load line assignment.

(F) Light ship characteristics.

(ii) The plan must identify the shore location and 24-hour access procedures for the computerized, shore-based damage stability and residual structural strength calculation programs required by § 155.240.

(d) *Shore-based response activities.* This section of the response plan must include the following information:

(1) The qualified individual's responsibilities and authority, including immediate communication with the Federal on-scene coordinator and notification of the oil spill removal organization(s) identified in the plan.

(2) If applicable, procedures for transferring responsibility for direction of response activities from vessel personnel to the shore-based spill management team.

(3) The procedures for coordinating the actions of the vessel owner or operator or qualified individual with the predesignated Federal on-scene coordinator responsible for overseeing or directing those actions.

(4) The organizational structure that will be used to manage the response actions. This structure must include the following functional areas and must further include information for key components within each functional area:

(i) Command and control;

(ii) Public information;

(iii) Safety;

(iv) Liaison with government agencies;

(v) Spill response operations;

(vi) Planning;

(vii) Logistics support; and

(viii) Finance.

(5) The responsibilities of, duties of, and functional job descriptions for each oil spill management team position within the organizational structure identified in paragraph (d)(4) of this section.

(e) *List of contacts.* The name, location, and 24-hour contact information for the following key individuals and organizations must be included in this section of the response plan or, if more appropriate, in a geographic-specific appendix and referenced in this section of the response plan:

(1) Vessel owner or operator.

(2) Qualified individual and alternate qualified individual for the vessel's area of operation.

(3) Applicable insurance representatives or surveyors for the vessel's area of operation.

(4) The vessel's local agent(s) for the vessel's area of operation.

(5) Person(s) within the oil spill removal organization to notify for activation of that oil spill removal organization for the three spill scenarios identified in paragraph (i)(5) of this section for the vessel's area of operation.

(6) Person(s) within the identified response organization to notify for activating that organization to provide:

(i) The required emergency lightering required by § 155.1050(j), § 155.1052(g), § 155.1230(g), or § 155.2230(g), as applicable to the type of service of the vessel; and

(ii) The required salvage and firefighting required by § 155.1050(j), § 155.1052(e), § 155.1230(e), and

§ 155.2230(e), as applicable to the type of service of the vessel.

(7) Person(s) to notify for activation of the spill management team for the spill response scenarios identified in paragraph (i)(5) of this section for the vessel's area of operation.

(f) *Training procedures*. This section of the response plan must address the training procedures and programs of the vessel owner or operator to meet the requirements in § 155.1055.

(g) *Exercise procedures*. This section of the response plan must address the exercise program to be carried out by the vessel owner or operator to meet the requirements in § 155.1060.

(h) *Plan review, update, revision, amendment, and appeal procedure*. This section of the response plan must address—

(1) The procedures to be followed by the vessel owner or operator to meet the requirements of § 155.1070; and

(2) The procedures to be followed for any post-discharge review of the plan to evaluate and validate its effectiveness.

(i) *Geographic-specific appendices for each COTP zone in which a vessel operates*. A geographic-specific appendix must be included for each COTP zone identified. The appendices must include the following information or identify the location of such information within the plan:

(1) A list of the geographic areas (port areas, rivers and canals, Great Lakes, inland, nearshore, offshore, and open ocean areas) in which the vessel intends to handle, store, or transport oil within the applicable COTP zone.

(2) The volume and group of oil on which the required level of response resources are calculated.

(3) Required Federal or State notifications applicable to the geographic areas in which a vessel operates.

(4) Identification of the qualified individuals.

(5) Identification of the oil spill removal organization(s) that are identified and ensured available, through contract or other approved means, and the spill management team to respond to the following spill scenarios:

(i) Average most probable discharge.

(ii) Maximum most probable discharge.

(iii) Worst case discharge.

(6) The organization(s) identified to meet the requirements of paragraph (i)(5) of this section must be capable of providing the equipment and supplies necessary to meet the requirements of §§ 155.1050, 155.1052, 155.1230, and 155.2230, as appropriate, and sources of trained personnel to continue operation of the equipment and staff the oil spill removal organization(s) and spill management team identified for the first 7 days of the response.

(7) The appendix must list the response resources and related information required under §§ 155.1050, 155.1052, 155.1230, 155.2230, and Appendix B of this part, as appropriate.

(8) If an oil spill removal organization(s) has been evaluated by the Coast Guard and their capability has been determined to equal or exceed the response capability needed by the vessel, the appendix may identify only the organization and their applicable classification and not the information required in paragraph (i)(7) of this section.

(9) For vessels that handle, store, or transport Group I through Group V petroleum oils, the appendix must also separately list the resource providers identified to provide the salvage, vessel firefighting, and lightering capabilities required in this subpart.

(10) For vessels that handle, store, or transport Group II through Group IV petroleum oils, and that operate in waters where dispersant use pre-authorization agreements exist, the appendix must also separately list the resource providers and specific resources, including appropriately trained dispersant-application personnel, necessary to provide, if appropriate, the dispersant capabilities required in this subpart. All resource providers and resources must be available by contract or other approved means. The dispersant resources to be listed within this section must include the following:

(i) Identification of each primary dispersant staging site to be used by each dispersant-application platform to meet the requirements of § 155.1050(k) of this chapter;

(ii) Identification of the platform type, resource provider, location, and dispersant payload for each dispersant-

application platform identified. Location data must identify the distance between the platform's home base and the identified primary dispersant-staging site(s) for this section.

(iii) For each unit of dispersant stockpile required to support the effective daily application capacity (EDAC) of each dispersant-application platform necessary to sustain each intended response tier of operation, identify the dispersant product resource provider, location, and volume. Location data must include the distance from the stockpile to the primary staging sites where the stockpile would be loaded onto the corresponding platforms. If an oil spill removal organization has been evaluated by the Coast Guard and its capability has been determined to meet the response capability needed by the owner or operator, the section may identify the oil spill removal organization only, and not the information required in paragraphs (i)(10)(i) through (i)(10)(iii) of this section.

(11) The appendix must also separately list the resource providers and specific resources necessary to provide oil-tracking capabilities required in this subpart. The oil tracking resources to be listed within this section must include the following:

(i) The identification of a resource provider; and

(ii) The type and location of aerial surveillance aircraft that have been ensured available, through contract or other approved means, to meet the oil tracking requirements of § 155.1050(l) of this chapter.

(j) *Appendices for vessel-specific information*. This section must include for each vessel covered by the plan the following information:

(1) List of the vessel's principal characteristics.

(2) Capacities of all cargo, fuel, lube oil, ballast, and fresh water tanks.

(3) The total volume and cargo groups of oil cargo that would be involved in the—

(i) Maximum most probable discharge; and

(ii) Worst case discharge.

(4) Diagrams showing location of all tanks.

(5) General arrangement plan (can be maintained separately aboard the vessel providing the response plan identifies the location).

(6) Midships section plan (can be maintained separately aboard the vessel providing the response plan identifies the location).

(7) Cargo and fuel piping diagrams and pumping plan, as applicable (can be maintained separately aboard the vessel providing the response plan identifies the location).

(8) Damage stability data (can be maintained separately providing the response plan identifies the location).

(9) Location of cargo and fuel stowage plan for vessel (normally maintained separately aboard the vessel).

(10) Location of information on the name, description, physical and chemical characteristics, health and safety hazards, and spill and firefighting procedures for the oil cargo aboard the vessel. A material safety data sheet meeting the requirements of 29 CFR 1910.1200, cargo information required by 33 CFR 154.310, or equivalent will meet this requirement. This information can be maintained separately.

[CGD 91–034, 61 FR 1081, Jan. 12, 1996, as amended by CGD 96–026, 61 FR 33666, June 28, 1996; USCG–2005–21531, 70 FR 36349, June 23, 2005; USCG–2008–0179, 73 FR 35015, June 19, 2008; USCG–2001–8661, 74 FR 45027, Aug. 31, 2009; USCG–2010–0351, 75 FR 36285, June 25, 2010]

### § 155.1040 Response plan requirements for unmanned tank barges carrying oil as a primary cargo.

(a) *General information and introduction*. This section of the response plan must include—

(1) A list of tank barges covered by the plan, which must include the country of registry, call sign, IMO international numbers (if applicable), and official numbers of the listed tank barges;

(2) The name, address, and procedures for contacting the barge's owner or operator on a 24-hour basis;

(3) A list of the COTP zones in which the tank barges covered by the plan intend to handle, store, or transport oil;

(4) A table of contents or index of sufficient detail to permit personnel with responsibilities under the response plan to locate the specific sections of the plan; and

(5) A record of change(s) page used to record information on plan reviews, updates or revisions.

(b) *Notification procedures.* This section of the response plan must include the following notification information:

(1) A checklist with all notifications. The checklist must include notifications required by MARPOL 73/78, 33 CFR part 153, and any applicable State, including telephone or other contact numbers, in the order of priority and the information required for those notifications to be made by the—

(i) Towing vessel;

(ii) Vessel owner or operator; or

(iii) Qualified individual.

(2) Identification of the person(s) to be notified of a discharge or substantial threat of a discharge of oil. If the notifications vary due to the location of the barge, the persons to be notified also must be identified in a geographic-specific appendix. This section must separately identify—

(i) The individual(s) or organization(s) to be notified by the towing vessel; and

(ii) The individual(s) or organization(s) to be notified by shore-based personnel.

(3) The procedures for notifying the qualified individuals designated by the barge's owner or operator.

(4) Identification of the primary and, if available, secondary communications methods by which the notifications will be made, consistent with the requirements of paragraph (b)(1) of this section.

(5) The information that is to be provided in the initial and any follow-up notifications required by paragraph (b)(1) of this section.

(i) The initial notification information must include at least the following information:

(A) Towing vessel name (if applicable);

(B) Tank barge name, country of registry, and official number;

(C) Date and time of the incident;

(D) Location of the incident;

(E) Course, speed, and intended track of towing vessel (if applicable);

(F) Radio station(s) frequencies guarded by towing vessel (if applicable);

(G) Date and time of next report;

(H) Type and quantity of oil on board;

(I) Nature and details of defects, deficiencies, and damage (e.g., grounding, collision, hull failure, etc.);

(J) Details of pollution, including estimate of oil discharged or threat of discharge;

(K) Weather and sea conditions on scene;

(L) Barge size and type;

(M) Actions taken or planned by persons on scene;

(N) Current condition of the barge; and

(O) Details of injuries, if any.

(ii) After the transmission of the initial notification, as much as possible of the information essential for the protection of the marine environment as is appropriate to the incident must be reported to the appropriate on-scene coordinator in a follow-up report. This information must include—

(A) Additional detail on the type of cargo on board;

(B) Additional details on the condition of the barge and ability to transfer cargo, ballast, and fuel;

(C) Additional details on the quantity, extent and movement of the pollution and whether the discharge is continuing;

(D) Any changes in the on-scene weather or sea conditions; and

(E) Actions being taken with regard to the discharge and the movement of the vessel.

(6) Identification of the person(s) to be notified of a vessel casualty potentially affecting the seaworthiness of a vessel and the information to be provided by the towing vessel personnel or tankermen, as applicable, to shore-based personnel to facilitate the assessment of damage stability and stress.

(c) *Shipboard spill mitigation procedures.* This section of the response plan must include—

(1) Procedures to be followed by the tankerman, as defined in 46 CFR 35.35–1, to mitigate or prevent any discharge or a substantial threat of such a discharge of oil resulting from operational activities and casualties. These procedures must address personnel actions in the event of a—

(i) Transfer system leak;

(ii) Tank overflow; or

(iii) Suspected cargo tank or hull leak;

(2) Procedures in the order of priority for the towing vessel or barge owner or operator to mitigate or prevent any discharge or a substantial threat of such a discharge of oil in the event of the following casualties or emergencies:

(i) Grounding or stranding;

(ii) Collision;

(iii) Explosion or fire, or both;

(iv) Hull failure;

(v) Excessive list; and

(3) Procedures for tankermen or towing vessel crew to employ discharge removal equipment required by subpart B of this part;

(4) The procedures for the internal transfer of cargo in an emergency;

(5) The procedures for ship-to-ship transfers of cargo in an emergency:

(i) The procedures must identify the response resources necessary to carry out the transfers, including—

(A) Fendering equipment (ship-to-ship only);

(B) Transfer hoses and connection equipment;

(C) Portable pumps and ancillary equipment; and

(D) Lightering vessels (ship-to-ship only).

(ii) Reference can be made to separate oil transfer procedures or a lightering plan provided that safety considerations are summarized in the response plan.

(iii) The location of all equipment and fittings, if any, to perform such transfers must be identified;

(6) The procedures and arrangements for emergency towing, including the rigging and operation of any emergency towing equipment, including that required by subpart B of this part aboard the barge;

(7) The location and procedures for use of equipment stowed aboard either the barge or towing vessel to mitigate an oil discharge;

(8) The responsibilities of the towing vessel crew and facility or fleeting area personnel, if any, to initiate a response and supervise shore-based response resources;

(9) Damage stability, if applicable, and hull stress considerations when performing on board mitigation measures. This section must identify and describe—

(i) Activities in which the towing vessel crew or tankerman is trained and qualified to execute absent shore-based support or advice;

(ii) The individuals who shall be notified of a casualty potentially affecting the seaworthiness of the barge; and

(iii) The information that must be provided by the towing vessel to facilitate the assessment of damage stability and stress; and

(10)(i) Location of barge plans necessary to perform salvage, stability, and hull stress assessments. A copy of these barge plans must be maintained ashore by either the barge owner or operator or the vessel's recognized classification society. The response plan must indicate the shore location and 24-hour access procedures of the following plans:

(A) General arrangement plan.

(B) Midship section plan.

(C) Lines plan or table of offsets, as available.

(D) Tank tables; and

(ii) Plans for offshore oil barges must identify the shore location and 24-hour access procedures for the computerized shore-based damage stability and residual structural strength calculation programs required by § 155.240.

(d) *Shore-based response activities.* This section of the response plan must include the following information:

(1) The qualified individual's responsibilities and authority, including immediate communication with the Federal on-scene coordinator and notification of the oil spill removal organization(s) identified in the plan.

(2) If applicable, procedures for transferring responsibility for direction of response activities from towing vessel personnel or tankermen to the shore-based spill management team.

(3) The procedures for coordinating the actions of the barge owner or operator of qualified individual with the action of the predesignated Federal on-scene coordinator responsible for overseeing or directing those actions.

(4) The organizational structure that will manage the barge owner or operator's response actions. This structure must include the following functional

areas and must further include information for key components within each functional area:

(i) Command and control;

(ii) Public information;

(iii) Safety;

(iv) Liaison with government agencies;

(v) Spill response operations;

(vi) Planning;

(vii) Logistics support; and

(viii) Finance.

(5) The responsibilities of, duties of, and functional job descriptions for each oil spill management team position within the organizational structure identified in paragraph (d)(4) of this section.

(e) *List of contacts*. The name, location, and 24-hour contact information for the following key individuals and organizations must be included in this section or, if more appropriate, in a geographic-specific appendix and referenced in this section:

(1) Barge owner or operator.

(2) Qualified individual and alternate qualified individual for the tank barge's area of operation.

(3) Applicable insurance representatives or surveyors for the barge's area(s) of operation.

(4) Person(s) within the oil spill removal organization to notify for activation of that oil spill removal organization for the spill scenarios identified in paragraph (j)(5) of this section for the barges's area(s) of operation.

(5) Person(s) within the identified response organization to notify for activating that organization to provide:

(i) The required emergency lightering required by §§155.1050(j), 155.1052(g), 155.1230(g), and 155.2230(g), as applicable to the type of service of the barge(s); and

(ii) The required salvage and fire fighting required by §§155.1050(j), 155.1052(e), 155.1230(e), and 155.2230(e), as applicable to the type of service of the barge(s).

(6) Person(s) to notify for activation of the spill management team for the spill response scenarios identified in paragraph (j)(5) of this section for the vessel's area of operation.

(f) *Training procedures*. This section of the response plan must address the training procedures and programs of the barge owner or operator to meet the requirements in §155.1055.

(g) *Exercise procedures*. This section of the response plan must address the exercise program carried out by the barge owner or operator to meet the requirements in §155.1060.

(h) *Plan review, update, revisions amendment, and appeal procedure*. This section of the response plan must address—

(1) The procedures to be followed by the barge owner or operator to meet the requirements of §155.1070; and

(2) The procedures to be followed for any post-discharge review of the plan to evaluate and validate its effectiveness.

(i) *On board notification checklist and emergency procedures*. This portion of the response plan must be maintained in the documentation container aboard the unmanned barge. The owner or operator of an unmanned tank barge subject to this section shall provide the personnel of the towing vessel, fleeting area, or facility that the barge may be moored at with the information required by this paragraph and the responsibilities that the plan indicates will be carried out by these personnel. The on board notification checklist and emergency procedures must include—

(1) The toll-free number of the National Response Center;

(2) The name and procedures for contacting a primary qualified individual and at least one alternate on a 24-hour basis;

(3) The name, address, and procedure for contacting the vessel's owner or operator on a 24-hour basis;

(4) The list of information to be provided in the notification by the reporting personnel;

(5) A statement of responsibilities of and actions to be taken by reporting personnel after an oil discharge or substantial threat of such discharge; and

(6) The information contained in paragraph (c)(1) of this section.

(j) *Geographic-specific appendices for each COTP zone in which a tank barge operates*. A geographic-specific appendix must be included for each COTP zone identified. The appendices must include the following information or identify the location of such information within the plan:

(1) A list of the geographic areas (port areas, rivers and canals, Great Lakes, inland, nearshore, offshore, and open ocean areas) in which the barge intends to handle, store, or transport oil within the applicable COTP zone.

(2) The volume and group of oil on which the required level of response resources are calculated.

(3) Required Federal or State notifications applicable to the geographic areas in which the barge operates.

(4) Identification of the qualified individuals.

(5) Identification of the oil spill removal organization(s) that are identified and ensured available, through contract or other approved means and the spill management team to provide the response resources necessary to respond to the following spill scenarios:

(i) An average most probable discharge.

(ii) A maximum most probable discharge.

(iii) A worst case discharge to the maximum extent practicable.

(6) The organization(s) identified to meet the provisions of paragraph (j)(5) of this section must be capable of providing the equipment and supplies necessary to meet the provisions of §§155.1050, 155.1052, 155.1230, and 155.2230, as appropriate, and sources of trained personnel to continue operation of the equipment and staff the oil spill removal organization(s) and spill management team identified for the first seven days of the response.

(7) The appendix must list the response resources and related information required under §§155.1050, 155.1052, 155.1230, 155.2230, and Appendix B of this part, as appropriate.

(8) If the oil spill removal organization(s) providing the necessary response resources has been evaluated by the Coast Guard and their capability has been determined to equal or exceed the response capability needed by the vessel, the appendix may identify only the organization and their applicable classification and not the information required in paragraph (j)(7) of this section.

(9) The appendix must include a separate listing of the resource providers identified to provide the salvage, vessel firefighting, and lightering capabilities required in this subpart.

(10) The appendix must include a separate listing of the resource providers and specific resources necessary to provide, if appropriate, the dispersant capabilities required in this subpart. The dispersant resources to be listed within this section must include:

(i) Identification of a primary dispersant-staging site or sites to be used by each dispersant-application platform that is ensured available, through contract or other approved means, to meet the requirements of §155.1050(k);

(ii) Identification of the type, resource provider, location, and dispersant payload for each dispersant-application platform identified and ensured available. Location data must identify the distance between the platform's home base and the identified primary dispersant staging sites for this section; and,

(iii) For each unit of dispersant stockpile required to support the effective daily application capacity (EDAC) of each dispersant-application platform necessary to sustain each intended response tier of operation, identification of the dispersant product resource provider, location, and volume. Location data must include the stockpile's distance to the primary staging sites where it will be loaded onto the corresponding platforms. If an oil spill removal organization has been evaluated by the Coast Guard and its capability has been determined to equal or exceed the response capability needed by the owner or operator, the appendix may identify only the oil spill removal organization, and not the information required in paragraphs (j)(10)(i) through (j)(10)(iii) of this section.

(11) The appendix must include a separate listing of the resource providers and specific resources necessary to provide oil-tracking capabilities required in this subpart. The oil tracking resources listed within this section must include:

(i) The identification of a resource provider; and,

(ii) The type and location of aerial surveillance aircraft that have been ensured available, through contract or other approved means, to meet the oil

tracking requirements of § 155.1050(l) of this chapter.

(k) *Appendices for barge-specific information*. Because many of the tank barges covered by a response plan may be of the same design, this information does not need to be repeated provided the plan identifies the tank barges to which the same information would apply. The information must be part of the response plan unless specifically noted. This section must include for each barge covered by the plan the following information:

(1) List of the principal characteristics of the vessel.

(2) Capacities of all cargo, fuel, lube oil, and ballast tanks.

(3) The total volumes and cargo group(s) of oil cargo that would be involved in the—

(i) Maximum most probable discharge; and

(ii) Worst case discharge.

(4) Diagrams showing location of all tanks aboard the barge.

(5) General arrangement plan (can be maintained separately providing that the location is identified).

(6) Midships section plan (can be maintained separately providing that the location is identified).

(7) Cargo and fuel piping diagrams and pumping plan, as applicable (can be maintained separately providing that the location is identified).

(8) Damage stability data, if applicable.

(9) Location of cargo and fuel stowage plan for barge(s) (normally maintained separately).

(10) Location of information on the name, description, physical and chemical characteristics, health and safety hazards, and spill and firefighting procedures for the oil cargo aboard the barge. A material safety data sheet meeting the requirements of 29 CFR 1910.1200, cargo information required by 33 CFR 154.310, or equivalent will meet this requirement. This information can be maintained separately.

[CGD 91–034, 61 FR 1081, Jan. 12, 1996, as amended by USCG–2001–8661, 74 FR 45027, Aug. 31, 2009; USCG–2010–0351, 75 FR 36285, June 25, 2010]

## § 155.1045 Response plan requirements for vessels carrying oil as a secondary cargo.

(a) *General information and introduction*. This section of the response plan must include—

(1) The vessel's name, country of registry, call sign, official number, and IMO international number (if applicable). If the plan covers multiple vessels, this information must be provided for each vessel;

(2) The name, address, and procedures for contacting the vessel's owner or operator on a 24-hour basis;

(3) A list of COTP zones in which the vessel intends to handle, store, or transport oil;

(4) A table of contents or index of sufficient detail to permit personnel with responsibilities under the response plan to locate the specific sections of the plan; and

(5) A record of change(s) page used to record information on plan updates or revisions.

(6) As required in paragraph (c) of this section, the vessel owner or operator must list in his or her plan the total volume of oil carried in bulk as cargo.

(i) For vessels that transfer a portion of their fuel as cargo, 25 percent of the fuel capacity of the vessel plus the capacity of any oil cargo tank(s) will be assumed to be the cargo volume for determining applicable response plan requirements unless the vessel owner or operator indicates otherwise.

(ii) A vessel owner or operator can use a volume less than 25 percent if he or she submits historical data with the plan that substantiates the transfer of a lower percentage of its fuel capacity between refuelings.

(b) *Notification procedures*. This section of the response plan must include the following notification information:

(1) A checklist with all notifications, including telephone or other contact numbers, in the order of priority to be made by shipboard or shore-based personnel and the information required for those notifications. Notifications must include those required by—

(i) MARPOL 73/78 and 33 CFR part 153; and

(ii) Any applicable State.

(2) Identification of the person(s) to be notified of a discharge or substantial threat of discharge of oil. If notifications vary due to vessel location, the person(s) to be notified also must be identified in a geographic-specific appendix. This section must separately identify—

(i) The individual(s) or organization(s) to be notified by shipboard personnel; and

(ii) The individual(s) or organization(s) to be notified by shore-based personnel.

(3) The procedures for notifying the qualified individual and alternate qualified individual.

(4) Descriptions of the primary and, if available, secondary communication methods by which the notifications will be made, consistent with the requirements in paragraph (b)(1) of this section.

(5) The information that is to be provided in the initial and any follow-up notifications required by paragraph (b)(1) of this section.

(i) The initial notification may be submitted in accordance with IMO Resolution A648(16) ''General Principles for Ship Reporting Systems and Ship Reporting Requirements.'' It must include at least the following information:

(A) Vessel name, country of registry, call sign, IMO international number (if applicable), and official number (if any);

(B) Date and time of the incident;

(C) Location of the incident;

(D) Course, speed, and intended track of vessel;

(E) Radio station(s) and frequencies guarded;

(F) Date and time of next report;

(G) Type and quantity of oil on board;

(H) Nature and detail of defects, deficiencies, and damage (e.g., grounding, collision, hull failure, etc.);

(I) Details of pollution, including estimate of oil discharged or threat of discharge;

(J) Weather and sea conditions on scene;

(K) Ship size and type;

(L) Actions taken or planned by persons on scene;

(M) Current conditions of the vessel; and

(N) Number of crew and details of injuries, if any.

(ii) After the transmission of the initial notification, as much as possible of the information essential for the protection of the marine environment as is appropriate to the incident must be reported to the appropriate on-scene coordinator in a follow-up report. This information must include—

(A) Additional details on the type of cargo on board;

(B) Additional details on the condition of the vessel and ability to transfer cargo, ballast, and fuel;

(C) Additional details on the quantity, extent and movement of the pollution and whether the discharge is continuing;

(D) Any changes in the on-scene weather or sea conditions; and

(E) Actions being taken with regard to the discharge and the movement of the ship.

(c) *Shipboard spill mitigation procedures.* This section of the response plan must identify the vessel's total volumes of oil carried in bulk as cargo and meet the applicable requirements of this paragraph as in paragraph (a)(6) of this section.

(1) For vessels carrying 100 barrels or less of oil in bulk as cargo, the plan must include a basic emergency action checklist for vessel personnel including notification and actions to be taken to prevent or mitigate any discharge or substantial threat of such a discharge of oil from the vessel.

(2) For vessels carrying over 100 barrels of oil but not exceeding 5,000 barrels of oil in bulk as cargo, the plan must include—

(i) Detailed information on actions to be taken by vessel personnel to prevent or mitigate any discharge or substantial threat of such a discharge of oil from the vessel due to operational activities or casualties;

(ii) Detailed information on damage control procedures to be followed by vessel personnel;

(iii) Detailed procedures for internal or external transfer of oil in bulk as cargo in an emergency; and

(iv) Procedures for use of any equipment carried aboard the vessel for spill mitigation.

(3) For vessels carrying over 5,000 barrels of oil as a secondary cargo, the plan must provide the information required by §155.1035(c) for shipboard spill mitigation procedures.

(4) For all vessels, the plan must include responsibilities and actions to be taken by vessel personnel, if any, to initiate a response and supervise shore-based response resources.

(d) *Shore-based response activities.* This section of the response plan must include the following information:

(1) The qualified individual's responsibilities and authority, including immediate communication with the Federal on-scene coordinator and notification of the oil spill removal organization(s) identified in the plan.

(2) If applicable, procedures for transferring responsibility for direction of response activities from vessel personnel to the shore-based spill management team.

(3) The procedures for coordinating the actions of the vessel owner or operator with the actions of the predesignated Federal on-scene coordinator responsible for overseeing or directing those actions.

(4) The organizational structure that will be used to manage the response actions. This structure must include the following functional areas and must further include information for key components within each functional area:

(i) Command and control;

(ii) Public information;

(iii) Safety;

(iv) Liaison with government agencies;

(v) Spill response operations;

(vi) Planning;

(vii) Logistics support; and

(viii) Finance.

(5) The responsibilities, duties, and functional job description for each oil spill management team member within the organizational structure identified in paragraph (d)(4) of this section.

(e) *List of contacts.* The name, location, and 24-hour contact information for the following key individuals or organizations must be included in this section or, if more appropriate, in a geographic-specific appendix and referenced in this section:

(1) Vessel owner or operator, and if applicable, charterer.

(2) Qualified individual and alternate qualified individual for the vessel's area of operation.

(3) Vessel's local agent(s), if applicable, for the vessel's area of operation.

(4) Applicable insurance representatives or surveyors for the vessel's area of operation.

(5) Person(s) within the identified oil spill removal organization(s) to notify for activation of the oil spill removal organization(s) identified under paragraph (i)(3) of this section for the vessel's area of operation.

(6) Person(s) to notify for activation of the spill management team.

(f) *Training procedures.* (1) This section of the response plan must address the training procedures and programs of the vessel owner or operator. The vessel owner or operator shall ensure that—

(i) All personnel with responsibilities under the plan receive training in their assignments and refresher training as necessary, and participate in exercises required under paragraph (g) of this section. Documented work experience can be used instead of training; and

(ii) Records of this training are maintained aboard the vessel, at the U.S. location of the spill management team, or with the qualified individual. The plan must specify where the records are located.

(2) Nothing in this section relieves the vessel owner or operator from responsibility to ensure that all private shore-based response personnel are trained to meet the Occupational Safety and Health Administration (OSHA) standards for emergency response operations in 29 CFR 1910.120.

(g) *Exercise procedures.* This section of the response plan must address the exercise program carried out by the vessel owner or operator to evaluate the ability of vessel and shore-based personnel to perform their identified functions in the plan. The required exercise frequency for each category of vessel is as follows:

(1) For vessels carrying 100 barrels or less of oil as cargo—

(i) On board spill mitigation procedures and qualified individual notification exercises must be conducted annually; and

(ii) Shore-based oil spill removal organization exercises must be conducted biennially.

(2) For vessels carrying over 100 barrels and up to 5,000 barrels of oil in bulk as cargo—

(i) On board emergency procedures and qualified individual notification exercises must be conducted quarterly; and

(ii) Shore-based oil spill removal organization exercises must be conducted annually.

(3) Vessels carrying over 5,000 barrels of oil in bulk as cargo must meet the exercise requirement of § 155.1060.

(h) *Plan review, update, revision, amendment, and appeal procedures.* This section of the response plan must address—

(1) The procedures to be followed by the vessel owner or operator to meet the requirement of § 155.1070; and

(2) The procedures to be followed for any post-discharge review of the plan to evaluate and validate its effectiveness

(i) *Geographic-specific appendices for each COTP zone in which a vessel operates.* A geographic-specific appendix must be included for each COTP zone identified. The appendix must include the following information or identify the location of such information within the plan:

(1) Required Federal or State notifications applicable to the geographic areas in which a vessel operates.

(2) Identification of the qualified individuals.

(3) A list of the oil spill removal organization(s) and the spill management team(s) available to respond to the vessel's worst case oil discharge in each COTP zone in which a vessel operates. The oil spill removal organization(s) identified must be capable of commencing oil spill containment and on-water recovery within the response times listed for Tier 1 in § 155.1050(g); providing temporary storage of recovered oil; and conducting shoreline protection and cleanup operations. An oil spill removal organization may not be identified in the plan unless the organization has provided written consent to being identified in the plan as an available resource.

(j) *Appendices for vessel-specific information.* This section must include for each vessel covered by the plan the following information:

(1) List of the vessel's principal characteristics (*i.e.*, length, beam, gross tonnage, etc.).

(2) Capacities of all cargo, fuel, lube oil, ballast, and fresh water tanks.

(3) The total volume and cargo groups of oil cargo that would be involved in the—

(i) Maximum most probable discharge; and

(ii) Worst case discharge.

(4) Diagrams showing location of all tanks.

(5) Cargo and fuel piping diagrams and pumping plan as applicable. These diagrams and plans can be maintained separately aboard the vessel providing the response plan identifies the location.

(6) Location of information on the name, description, physical and chemical characteristics, health and safety hazards, and spill and firefighting procedures for the oil cargo aboard the vessel. A material safety data sheet meeting the requirements of 29 CFR 1910.1200, cargo information required by 33 CFR 154.310, or the equivalent, will meet this requirement. This information can be maintained separately on board the vessel, providing the response plan identifies the location.

### § 155.1050 Response plan development and evaluation criteria for vessels carrying groups I through IV petroleum oil as a primary cargo.

(a) The following criteria must be used to evaluate the operability of response resources identified in the response plan for the specified operating environment:

(1) Table 1 of appendix B of this part.

(i) The criteria in table 1 of appendix B of this part are to be used solely for identification of appropriate equipment in a response plan.

(ii) These criteria reflect conditions used for planning purposes to select mechanical response equipment and are not conditions that would limit response actions or affect normal vessel operations.

(2) Limitations that are identified in the Area Contingency Plans for the COTP zones in which the vessel operates, including—

(i) Ice conditions;

(ii) Debris;

(iii) Temperature ranges; and

(iv) Weather-related visibility.

(b) The COTP may reclassify a specific body of water or location within the COTP zone. Any reclassifications will be identified in the applicable Area Contingency Plan. Reclassifications may be to—

(1) A more stringent operating environment if the prevailing wave conditions exceed the significant wave height criteria during more than 35 percent of the year; or

(2) A less stringent operating environment if the prevailing wave conditions do not exceed the significant wave height criteria for the less stringent operating environment during more than 35 percent of the year.

(c) Response equipment must—

(1) Meet or exceed the criteria listed in table 1 of appendix B of this part;

(2) Be capable of functioning in the applicable operating environment; and

(3) Be appropriate for the petroleum oil carried.

(d) The owner or operator of a vessel that carries groups I through IV petroleum oil as a primary cargo shall identify in the response plan and ensure the availability of, through contract or other approved means, the response resources that will respond to a discharge up to the vessel's average most probable discharge.

(1) For a vessel that carries groups I through IV petroleum oil as its primary cargo, the response resources must include—

(i) Containment boom in a quantity equal to twice the length of the largest vessel involved in the transfer and capable of being deployed at the site of oil transfer operations—

(A) Within 1 hour of detection of a spill, when the transfer is conducted between 0 and 12 miles from the nearest shoreline; or

(B) Within 1 hour plus travel time from the nearest shoreline, based on an on-water speed of 5 knots, when the transfer is conducted over 12 miles up to 200 miles from the nearest shoreline; and

(ii) Oil recovery devices and recovered oil storage capacity capable of being at the transfer site—

(A) Within 2 hours of the detection of a spill during transfer operations, when the transfer is conducted between 0 and 12 miles from the nearest shoreline; or

(B) Within 1 hour plus travel time from the nearest shoreline, based on an on-water speed of 5 knots, when the transfer is conducted over 12 miles up to 200 miles from the nearest shoreline.

(2) For locations of multiple vessel transfer operations, a vessel may identify the same equipment as identified by other vessels, provided that each vessel has ensured access to the equipment through contract or other approved means. Under these circumstances, prior approval by the Coast Guard is not required for temporary changes in the contracted oil spill removal organization under § 155.1070(c)(5).

(3) The owner or operator of a vessel conducting transfer operations at a facility required to submit a response plan under 33 CFR 154.1017 is required to plan for and identify the response resources required in paragraph (d)(1) of this section. However, the owner or operator is not required to ensure by contract or other means the availability of such resources.

(e) The owner or operator of a vessel carrying groups I through IV petroleum oil as a primary cargo must identify in the response plan and ensure the availability of, through contract or other approved means, the response resources necessary to respond to a discharge up to the vessel's maximum most probable discharge volume.

(1) These resources must be positioned such that they can arrive at the scene of a discharge within—

(i) 12 hours of the discovery of a discharge in higher volume port areas and the Great Lakes;

(ii) 24 hours of the discovery of a discharge in all rivers and canals, inland, nearshore and offshore areas; and

(iii) 24 hours of the discovery of a discharge plus travel time from shore for open ocean areas.

(2) The necessary response resources include sufficient containment boom,

oil recovery devices, and storage capacity for any recovery of up to the maximum most probable discharge planning volume.

(3) The response plan must identify the storage location, make, model, and effective daily recovery capacity of each oil recovery device that is identified for plan credit.

(4) The response resources identified for responding to a maximum most probable discharge must be positioned to be capable of meeting the planned arrival times in this paragraph. The COTP with jurisdiction over the area in which the vessel is operating must be notified whenever the identified response resources are not capable of meeting the planned arrival times.

(f) The owner or operator of a vessel carrying groups I through IV petroleum oil as a primary cargo must identify in the response plan and ensure the availability of, through contract or other approved means, the response resources necessary to respond to discharges up to the worst case discharge volume of the oil cargo to the maximum extent practicable.

(1) The location of these resources must be suitable to meet the response times identified for the applicable geographic area(s) of operation and response tier.

(2) The response resources must be appropriate for—

(i) The capacity of the vessel;

(ii) Group(s) of petroleum oil carried as cargo; and

(iii) The geographic area(s) of vessel operation.

(3) The resources must include sufficient boom, oil recovery devices, and storage capacity to recover the planning volumes.

(4) The response plan must identify the storage location, make, model, and effective daily recovery capacity of each oil recovery device that is identified for plan credit.

(5) The guidelines in appendix B of this part must be used for calculating the quantity of response resources required to respond at each tier to the worst case discharge to the maximum extent practicable.

(6) When determining response resources necessary to meet the requirements of this paragraph (f)(6), a portion of those resources must be capable of use in close-to-shore response activities in shallow water. The following percentages of the response equipment identified for the applicable geographic area must be capable of operating in waters of 6 feet or less depth:

(i) Open ocean—none.

(ii) Offshore—10 percent.

(iii) Nearshore, inland, Great Lakes, and rivers and canals—20 percent.

(7) Response resources identified to meet the requirements of paragraph (f)(6) of this section are exempt from the significant wave height planning requirements of table 1 of appendix B of this part.

(g) Response equipment identified to respond to a worst case discharge must be capable of arriving on scene within the times specified in this paragraph for the applicable response tier in a higher volume port area, Great Lakes, and in other areas. Response times for these tiers from the time of discovery of a discharge are—

| | Tier 1 | Tier 2 | Tier 3 |
|---|---|---|---|
| Higher volume port area (except tankers in Prince William Sound covered by § 155.1135). | 12 hrs ..... | 36 hrs ..... | 60 hrs |
| Great Lakes ..... | 18 hrs ..... | 42 hrs ..... | 66 hrs |
| All other rivers & canals, inland, nearshore, and offshore areas. | 24 hrs ..... | 48 hrs ..... | 72 hrs |
| Open ocean (plus travel time from shore). | 24 hrs+ .... | 48 hrs+ .... | 72 hrs+ |

(h) For the purposes of arranging for response resources through contract or other approved means, response equipment identified for Tier 1 plan credit must be capable of being mobilized and enroute to the scene of a discharge within 2 hours of notification. The notification procedures identified in the plan must provide for notification and authorization for mobilization of identified Tier 1 response resources—

(1) Either directly or through the qualified individual; and

(2) Within 30 minutes of a discovery of a discharge or substantial threat of discharge.

(i) Response resources identified for Tier 2 and Tier 3 plan credit must be

capable of arriving on scene within the time listed for the applicable tier.

(j) *Salvage* (including lightering) and *marine firefighting* requirements are found in subpart I of this part.

(k) The owner or operator of a vessel carrying groups II through IV petroleum oil as a primary cargo that operates in any inland, nearshore, or offshore area with pre-authorization for dispersant use must identify in their response plan, and ensure availability through contract or other approved means, of response resources capable of conducting dispersant operations within those areas.

(1) Dispersant response resources must be capable of commencing dispersant-application operations at the site of a discharge within 7 hours of the decision by the Federal On-Scene Coordinator to use dispersants.

(2) Dispersant response resources must include all of the following:

(i) Sufficient dispersant capability for application as required by paragraph (k)(3) of this section. Any dispersants identified in a response plan must be of a type listed on the National Oil and Hazardous Substances Pollution Contingency Plan Product Schedule (contained in 40 CFR part 300, and available online from the U.S. Government Printing Office).

(ii) Dispersant-application platforms capable of delivering and applying dispersant in the amounts required by paragraph (k)(3) of this section. At least 50 percent of each effective daily application capacity (EDAC) tier requirement must be achieved through the use of fixed wing aircraft-based application platforms. The adequacy of dispersant-application platforms not detailed within the Dispersant Mission Planner 2 must be documented by presentation of independent evaluation materials (e.g., field tests and reports of actual use).

(iii) Dispersant-application personnel trained in and capable of applying dispersants within the performance criteria in ASTM F1413–07 (incorporated by reference, see §155.140). The adequacy of dispersant-application systems not fully covered by ASTM F1413–07, such as fire monitor-type applicators, must be documented by presentation of independent evaluation materials (e.g., laboratory tests, field tests, and reports of actual use).

(iv) Dispersant-application systems ensured to be available, including trained personnel, that are capable of applying dispersants in accordance with the recommended procedures in ASTM F1737–07 (incorporated by reference, see §155.140).

TABLE 155.1050(K)—TIERS FOR EFFECTIVE DAILY APPLICATION CAPABILITY

| | Response time for completed application | Dispersant application dispersant: oil treated in gallons (Gulf Coast) | Dispersant application dispersant: oil treated in gallons All other U.S. |
|---|---|---|---|
| Tier 1 | 12 | 8,250:165,000 | 4,125:82,500 |
| Tier 2 | 36 | 23,375:467,000 | 23,375:467,000 |
| Tier 3 | 60 | 23,375:467,000 | 23,375:467,000 |
| Total | 60 | 55,000:1,100,000 | 50,875:1,017,500 |

NOTE: Gulf Coast Tier 1 is higher due to greater potential spill size and frequency in that area, and it is assumed that dispersant stockpiles would be centralized in the Gulf area. Alternative application ratios may be considered based on submission to Coast Guard Headquarters, Office of Incident Management & Preparedness (CG–533) of peer-reviewed scientific evidence of improved capability.

(3) Dispersant stockpiles, application platforms, and other supporting resources must be ensured available in a quantity and type sufficient to treat a vessel's worst case discharge (as determined by using the criteria in Section 8 of appendix B), or in quantities sufficient to meet the requirements in Table 155.1050(k), whichever is the lesser amount.

(l) The owner or operator of a vessel carrying groups I through IV petroleum oil as a primary cargo must identify in the response plan, and ensure their availability through contract or other approved means, response resources necessary to provide aerial oil

tracking to support oil spill assessment and cleanup activities. Vessels operating on inland rivers are not required to comply with this paragraph.

(1) Aerial oil tracking resources must be capable of arriving at the site of a discharge in advance of the arrival of response resources identified in the plan for tiers 1, 2, and 3 Worst Case Discharge response times, and for a distance up to 50 nautical miles from shore (excluding inland rivers).

(2) Aerial oil tracking resources must include the following:

(i) Appropriately located aircraft and personnel capable of meeting the response time requirement for oil tracking in §155.1050(l)(1) of this section;

(ii) Sufficient numbers of aircraft, pilots, and trained observation personnel to support oil spill operations, commencing upon initial assessment, and capable of coordinating on-scene cleanup operations, including dispersant, insitu burning, and mechanical recovery operations;

(iii) Observation personnel must be trained in the protocols of oil spill reporting and assessment, including estimation of slick size, thickness, and quantity. Observation personnel must be trained in the use of assessment techniques in ASTM F1779–08 (incorporated by reference, see §155.140), and familiar with the use of pertinent guides, including, but not limited to, NOAA's ''Open Water Oil Identification Job Aid for Aerial Observation'' and the ''Characteristic Coastal Habitats'' guide; and

(iv) The capability of supporting oil spill removal operations continuously for three 10-hour operational periods during the initial 72 hours of the discharge.

(m) [Reserved]

(n) The owner or operator of a vessel carrying groups I through IV petroleum oil as a primary cargo must identify in the response plan and ensure the availability of, through contract or other approved means, response resources necessary to perform shoreline protection operations.

(1) The response resources must include the quantities of boom listed in table 2 of appendix B of this part, based on the areas in which the vessel operates.

(2) Vessels that intend to offload their cargo at the Louisiana Offshore Oil Port (LOOP) marine terminal are not required to comply with the requirements of this paragraph when they are within the offshore area and under one of the following conditions:

(i) Approaching or departing the LOOP marine terminal within the LOOP Shipping Safety Fairway, as defined in 33 CFR 166.200.

(ii) Moored at the LOOP marine terminal for the purposes of cargo transfer operations or anchored in the designated anchorage area awaiting discharge.

(o) The owner or operator of a vessel carrying groups I through IV petroleum oil as a primary cargo must identify in the response plan and ensure the availability of, through contract or other approved means, an oil spill removal organization capable of effecting a shoreline cleanup operation commensurate with the quantity of emulsified petroleum oil to be planned for in shoreline cleanup operations.

(1) The shoreline cleanup resources required must be determined as described in appendix B of this part.

(2) Vessels that intend to offload their cargo at the Louisiana Offshore Oil Port (LOOP) marine terminal are not required to comply with the requirements of this paragraph when they are within the offshore area and under one of the following conditions:

(i) Approaching or departing the LOOP marine terminal within the LOOP Shipping Safety Fairway as defined in 33 CFR 166.200.

(ii) Moored at the LOOP marine terminal for the purposes of cargo transfer operations or anchored in the designated anchorage area awaiting discharge.

(p) Appendix B of this part sets out caps that recognize the practical and technical limits of response capabilities for which an individual vessel owner or operator can contract in advance. Table 6 in appendix B lists the contracting caps that are applicable, as of February 18, 1993, and that are slated to apply on February 18, 1998. The owner or operator of a vessel carrying groups I through IV petroleum oil as a primary cargo, whose required daily recovery capacity exceeds the applicable

contracting caps in table 6, shall identify commercial sources of additional equipment equal to twice the cap listed for each tier or the amount necessary to reach the calculated planning volume, whichever is lower, to the extent that this equipment is available. The equipment so identified must be capable of arriving on scene no later than the applicable tier response times contained in §155.1050(g) or as quickly as the nearest available resource permits. A response plan must identify the specific sources, locations, and quantities of this additional equipment. No contract is required.

(q) The Coast Guard will continue to evaluate the environmental benefits, cost efficiency and practicality of increasing mechanical recovery capability requirements. This continuing evaluation is part of the Coast Guard's long term commitment to achieving and maintaining an optimum mix of oil spill response capability across the full spectrum of response modes. As best available technology demonstrates a need to evaluate or change mechanical recovery capacities, a review of cap increases and other requirements contained within this subpart may be performed. Any changes in the requirements of this section will occur through a public notice and comment process. During this review, the Coast Guard will determine if established caps remain practicable and if increased caps will provide any benefit to oil spill recovery operations. The review will include and evaluation of:

(1) Best available technologies for containment and recovery;

(2) Oil spill tracking technology;

(3) High rate response techniques;

(4) Other applicable response technologies; and

(5) Increases in the availability of private response resources.

[CGD 91–034, 61 FR 1081, Jan. 12, 1996, as amended by USCG–2008–0179, 73 FR 35015, June 19, 2008; USCG–1998–3417, 73 FR 80649, Dec. 31, 2008; USCG–2001–8661, 74 FR 45028, Aug. 31, 2009]

### § 155.1052 Response plan development and evaluation criteria for vessels carrying group V petroleum oil as a primary cargo.

(a) Owners and operators of vessels that carry group V petroleum oil as a primary cargo must provide information in their plan that identifies—

(1) Procedures and strategies for responding to discharges up to a worst case discharge of group V petroleum oils to the maximum extent practicable; and

(2) Sources of the equipment and supplies necessary to locate, recover, and mitigate such a discharge.

(b) Using the criteria in Table 1 of Appendix B of this part, an owner or operator of a vessel carrying group V petroleum oil as a primary cargo must ensure that any equipment identified in a response plan is capable of operating in the conditions expected in the geographic area(s) in which the vessel operates. When evaluating the operability of equipment, the vessel owner or operator must consider limitations that are identified in the Area Contingency Plans for the COTP zones in which the vessel operates, including—

(1) Ice conditions;

(2) Debris;

(3) Temperature ranges; and

(4) Weather-related visibility.

(c) The owner or operator of a vessel carrying group V petroleum oil as a primary cargo must identify in the response plan and ensure, through contract or other approved means, the availability of required equipment, including—

(1) Sonar, sampling equipment, or other methods for locating the oil on the bottom or suspended in the water column;

(2) Containment boom, sorbent boom, silt curtains, or other methods for containing oil that may remain floating on the surface or to reduce spreading on the bottom;

(3) Dredges, pumps, or other equipment necessary to recover oil from the bottom and shoreline; and

(4) Other appropriate equipment necessary to respond to a discharge involving the type of oil carried.

(d) Response resources identified in a response plan under paragraph (c) of this section must be capable of being

deployed within 24 hours of discovery of a discharge to the port nearest the area where the vessel is operating. An oil spill removal organization may not be listed in the plan unless the oil spill removal organization has provided written consent to be listed in the plan as an available resource.

(e) The owner or operator of a vessel carrying group V petroleum oil as a primary cargo shall identify in the response plan and ensure the availability of the following resources through contract or other approved means—

(1) A salvage company with appropriate expertise and equipment; and

(2) A company with vessel firefighting capability that will respond to casualties in the area(s) in which the vessel is operating.

(f) Vessel owners or operators must identify intended sources of the resources required under paragraph (e) of this section capable of being deployed to the areas in which the vessel will operate. A company may not be listed in the plan unless the company has provided written consent to be listed in the plan as an available resource. To meet this requirement in a response plan submitted for approval or reapproval on or after February 18, 1998, the vessel owner or operator must identify both the intended sources of this capability and demonstrate that the resources are capable of being deployed to the port nearest to the area where the vessel operates within 24 hours of discovery of a discharge.

(g) The owner or operator of a vessel carrying group V petroleum oil as a primary cargo shall identify in the response plan and ensure the availability of certain resources required by §§155.1035(c)(5)(ii) and 155.1040(c)(5)(i), as applicable, through contract or other approved means.

(1) Resources must include—

(i) Fendering equipment;

(ii) Transfer hoses and connection equipment; and

(iii) Portable pumps and ancillary equipment necessary to offload the vessel's largest cargo tank in 24 hours of continuous operation.

(2) Resources must be capable of reaching the locations in which the vessel operates within the stated times following notification:

(i) Inland, nearshore, and Great Lakes waters—12 hours.

(ii) Offshore waters and rivers and canals—18 hours.

(iii) Open ocean waters—36 hours.

(3) For barges operating in rivers and canals as defined in this subpart, the requirements of this paragraph (g)(3) may be met by listing resources capable of being deployed in an area within the response times in paragraph (g)(2) of this section. A vessel owner or operator may not identify such resources in a plan unless the response organization has provided written consent to be identified in a plan as an available resource.

### § 155.1055 Training.

(a) A response plan submitted to meet the requirements of §155.1035 must identify the training to be provided to persons having responsibilities under the plan, including members of the vessel crew, the qualified individual, and the spill management team. A response plan submitted to meet the requirements of §155.1040 must identify the training to be provided to the spill management team, the qualified individual, and other personnel in §155.1040 with specific responsibilities under the plan including tankermen and members of the towing vessel crew. The training program must differentiate between that training provided to vessel personnel and that training provided to shore-based personnel. Appendix C of this part provides additional guidance regarding training.

(b) A vessel owner or operator shall ensure the maintenance of records sufficient to document this training and make them available for inspection upon request by the Coast Guard. Records must be maintained for 3 years following completion of training. The response plan must identify the location of training records, which must be—

(1) On board the vessel;

(2) With the qualified individual; or

(3) At a U.S. location of the spill management team.

(c) A vessel owner or operator may identify equivalent work experience which fulfills specific training requirements.

(d) The vessel owner or operator shall ensure that any oil spill removal organization identified in a response plan to meet the requirements of this part maintains records sufficient to document training for the organization's personnel. These records must be available for inspection upon request by the Coast Guard. Records must be maintained for 3 years following completion of training.

(e) Nothing in this section relieves the vessel owner or operator from the responsibility to ensure that all private shore-based response personnel are trained to meet the Occupational Safety and Health Administration (OSHA) standards for emergency response operations in 29 CFR 1910.120.

(f) A training plan may be prepared in accordance with Training Elements for Oil Spill Response to satisfy the requirements of this section.

**§ 155.1060 Exercises.**

(a) A vessel owner or operator required by §§ 155.1035 and 155.1040 to have a response plan shall conduct exercise as necessary to ensure that the plan will function in an emergency. Both announced and unannounced exercises must be included. The following are the minimum exercise requirements for vessels covered by this subpart:

(1) Qualified individual notification exercises, which must be conducted quarterly;

(2) Emergency procedures exercises, which must be conducted quarterly;

(3) Shore-based spill management team tabletop exercises, which must be conducted annually. In a triennial period, at least one of these exercises must include a worst case discharge scenario;

(4) Oil spill removal organization equipment deployment exercises, which must be conducted annually; and

(5) An exercise of the entire response plan, which must be conducted every 3 years. The vessel owner or operator shall design the exercise program so that all components of the response plan are exercised at least once every 3 years. All of the components do not have to be exercised at one time; they may be exercised over the 3-year period through the required exercises or through an area exercise.

(b) Annually, at least one of the exercises listed in § 155.1060(a) (2) and (4) must be unannounced. An unannounced exercise is one in which the personnel participating in the exercise have not been advised in advance of the exact date, time, and scenario of the exercise.

(c) A vessel owner or operator shall participate in unannounced exercises, as directed by the Coast Guard COTP. The objectives of the unannounced exercises will be to evaluate notifications and equipment deployment for responses to average most probable discharge spill scenarios outlined in vessel response plans. The unannounced exercises will be limited to four per area per year, an area being that geographic area for which a separate and distinct Area Contingency Plan has been prepared, as described in the Oil Pollution Act of 1990. After participating in an unannounced exercise directed by a COTP, the owner or operator will not be required to participate in another unannounced exercise for at least 3 years from the date of the exercise.

(d) A vessel owner or operator shall participate in area exercises as directed by the applicable on-scene coordinator. The area exercises will involve equipment deployment to respond to the spill scenario developed by the exercise design team, of which the vessel owner or operator will be a member. After participating in an area exercise, a vessel owner or operator will not be required to participate in another area exercise for at least 6 years.

(e) The vessel owner or operator shall ensure that adequate exercise records are maintained. The following records are required:

(1) On board the vessel, records of the qualified individual notification exercises and the emergency procedures exercises. These exercises may be documented in the ship's log or may be kept in a separate exercise log.

(2) At the United States' location of either the qualified individual, spill management team, the vessel owner or operator, or the oil spill removal organization, records of exercises conducted off the vessel. Response plans must indicate the location of these records.

(f) Records described in paragraph (e) of this section must be maintained and available to the Coast Guard for 3 years following completion of the exercises.

(g) The response plan submitted to meet the requirements of this subpart must specify the planned exercise program. The plan shall detail the exercise program, including the types of exercises, frequencies, scopes, objectives, and the scheme for exercising the entire response plan every 3 years.

(h) Compliance with the National Preparedness for Response Exercise Program (PREP) Guidelines will satisfy the vessel response plan exercise requirements. These guidelines are available from the TASC DEPT Warehouse, 33141Q 75th Avenue, Landover, MD 20875 (fax: 301–386–5394, stock number USCG-X0241). Compliance with an alternative program that meets the requirements of paragraph (a) of this section and has been approved under § 155.1065 will also satisfy the vessel response plan exercise requirements.

NOTE TO PARAGRAPH (h): The PREP guidelines are available online at ''*http://www.uscg.mil/hq/g-m/nmc/response/msprep.pdf*''.

[CGD 91–034, 61 FR 1081, Jan. 12, 1996, as amended by 68 FR 37741, June 25, 2003; USCG–2008–0179, 73 FR 35015, June 19, 2008]

### § 155.1062 Inspection and maintenance of response resources.

(a) The owner or operator of a vessel required to submit a response plan under this part must ensure that—

(1) Containment booms, skimmers, vessels, and other major equipment listed or referenced in the plan are periodically inspected and maintained in good operating condition, in accordance with manufacturer's recommendations and best commercial practices; and

(2) All inspections and maintenance are documented and that these records are maintained for 3 years.

(b) For equipment which must be inspected and maintained under this section the Coast Guard may—

(1) Verify that the equipment inventories exist as represented;

(2) Verify the existence of records required under this section;

(3) Verify that the records of inspection and maintenance reflect the actual condition of any equipment listed or referenced; and

(4) Inspect and require operational tests of equipment.

(c) This section does not apply to containment booms, skimmers, vessels, and other major equipment listed or referenced in the plan and ensured available through the written consent of an oil spill removal organization, as described in the definition of ''contract or other approved means'' at § 155.1020.

### § 155.1065 Procedures for plan submission, approval, requests for acceptance of alternative planning criteria, and appeal.

(a) An owner or operator of a vessel to which this subpart applies shall submit one complete English language copy of a vessel response plan to Commandant (CG–5431), Coast Guard, 2100 2nd St., SW., Stop 7581, Washington, DC 20593–7581 or *vrp@uscg.mil*. The plan must be submitted at least 60 days before the vessel intends to handle, store, transport, transfer, or lighter oil in areas subject to the jurisdiction of the United States.

(b) The owner or operator shall include a statement certifying that the plan meets the applicable requirements of subparts D, E, F, and G of this part and shall include a statement indicating whether the vessel(s) covered by the plan are manned vessels carrying oil as a primary cargo, unmanned vessels carrying oil as a primary cargo, or vessels carrying oil as a secondary cargo.

(c) If the Coast Guard determines that the plan meets all requirements of this subpart, the Coast Guard will notify the vessel owner or operator with an approval letter. The plan will be valid for a period of up to 5 years from the date of approval.

(d) If the Coast Guard reviews the plan and determines that it does not meet all of the requirements, the Coast Guard will notify the vessel owner or operator of the response plan's deficiencies. The vessel owner or operator must then resubmit the revised plan, or corrected portions of the plan, within the time period specified in the written notice provided by the Coast Guard.

(e) For those vessels temporarily authorized under § 155.1025 to operate without an approved plan pending formal Coast Guard approval, the deficiency provisions of § 155.1070(c), (d), and (e) will also apply.

(f) When the owner or operator of a vessel believes that national planning criteria contained elsewhere in this part are inappropriate to the vessel for the areas in which it is intended to operate, the owner or operator may request acceptance of alternative planning criteria by the Coast Guard. Submission of a request must be made 90 days before the vessel intends to operate under the proposed alternative and must be forwarded to the COTP for the geographic area(s) affected.

(g) An owner or operator of a United States flag vessel may meet the response plan requirements of Regulation 37 of MARPOL 73/78 and subparts D, E, F, and G of this part by stating in writing, according to the provisions of § 155.1030(j), that the plan submitted is intended to address the requirements of both Regulation 37 of MARPOL 73/78 and the requirements of subparts D, E, F, and G of this part.

(h) Within 21 days of notification that a plan is not approved, the vessel owner or operator may appeal that determination to the Prevention Policy Directorate for Marine Safety, Security, and Stewardship (CG–54). This appeal must be submitted in writing to Commandant (CG–54), Coast Guard, 2100 2nd St., SW., Stop 7581, Washington, DC 20593–7581.

[CGD 91–034, 61 FR 1081, Jan. 12, 1996, as amended by CGD 96–026, 61 FR 33666, June 28, 1996; CGD 97–023, 62 FR 33364, June 19, 1997; USCG–2002–12471, 67 FR 41333, June 18, 2002; USCG–2008–0179, 73 FR 35015, June 19, 2008; USCG–2010–0351, 75 FR 36285, June 25, 2010]

### § 155.1070 Procedures for plan review, revision, amendment, and appeal.

(a) A vessel response plan must be reviewed annually by the owner or operator.

(1) This review must occur within 1 month of the anniversary date of Coast Guard approval of the plan.

(2) The owner or operator shall submit any plan amendments to the Coast Guard for information or approval. Revisions to a plan must include a cover page that provides a summary of the changes being made and the pages being affected. Revised pages must further include the number of the revision and date of that revision.

(3) Any required changes must be entered in the plan and noted on the record of changes page. The completion of the annual review must also be noted on the record of changes page.

(b) The owner or operator of a vessel covered by subparts D, E, F, and G of this part shall resubmit the entire plan to the Coast Guard for approval—

(1) Six months before the end of the Coast Guard approval period identified in § 155.1065(c); and

(2) Whenever there is a change in the owner or operator of the vessel, if that owner or operator provided the certifying statement required by § 155.1065(b). If this change occurs, a new statement certifying that the plan continues to meet the applicable requirements of subparts D, E, F, and G of this part must be submitted.

(c) Revisions or amendments to an approved response plan must be submitted for approval by the vessel's owner or operator whenever there is—

(1) A change in the owner or operator of the vessel, if that owner or operator is not the one who provided the certifying statement required by § 155.1065(b);

(2) A change in the vessel's operating area that includes ports or geographic area(s) not covered by the previously approved plan. A vessel may operate in an area not covered in a previously approved plan upon receipt of written acknowledgment by the Coast Guard that a new geographic-specific appendix has been submitted for approval by the vessel's owner or operator and the certification required in § 155.1025(c) has been provided;

(3) A significant change in the vessel's configuration that affects the information included in the response plan;

(4) A change in the type of oil cargo carried aboard (oil group) that affects the required response resources, except as authorized by the COTP for purposes of assisting in an oil spill response activity;

(5) A change in the identification of the oil spill removal organization(s) or

other response related resource required by §§ 155.1050, 155.1052, 155.1230, or 155.2230, as appropriate, except an oil spill removal organization required by § 155.1050(d) which may be changed on a case by case basis for an oil spill removal organization previously classified by the Coast Guard which has been ensured available by contract or other approved means;

(6) A significant change in the vessel's emergency response procedures;

(7) A change in the qualified individual;

(8) The addition of a vessel to the plan. This change must include the vessel-specific appendix required by this subpart and the owner or operator's certification required in § 155.1025(c); or

(9) Any other significant changes that affect the implementation of the plan.

(d) Thirty days in advance of operation, the owner or operator shall submit any revision or amendments identified in paragraph (c) of this section. The certification required in § 155.1065(b) must be submitted along with the revisions or amendments.

(e) The Coast Guard may require a vessel owner or operator to revise a response plan at any time if it is determined that the response plan does not meet the requirements of this subpart. The Coast Guard will notify the vessel owner or operator in writing of any deficiencies and any operating restrictions. Deficiencies must be corrected and submitted for acceptance within the time period specified in the written notice provided by the Coast Guard or the plan will be declared invalid and any further storage, transfer, handling, transporting or lightering of oil in areas subject to the jurisdiction of the United States will be in violation of section 311(j)(5)(E) of the Federal Water Pollution Control Act (FWPCA) (33 U.S.C. 1321(j)(5)(E)).

(f) A vessel owner or operator who disagrees with a deficiency determination may submit a petition for reconsideration to Prevention Policy Directorate for Marine Safety, Security, and Stewardship (CG–54), Coast Guard Headquarters, 2100 2nd St., SW., Stop 7581, Washington, DC 20593–7581 or vrp@uscg.mil within the time period required for compliance or within 7 days from the date of receipt of the Coast Guard notice of a deficiency determination, whichever is less. After considering all relevant material presented, the Coast Guard will notify the vessel owner or operator of the final decision.

(1) Unless the vessel owner or operator petitions for reconsideration of the Coast Guard's decision, the vessel's owner or operator must correct the response plan deficiencies within the period specified in the Coast Guard's initial determination.

(2) If the vessel owner or operator petitions the Coast Guard for reconsideration, the effective date of the Coast Guard notice of deficiency determination may be delayed pending a decision by the Coast Guard. Petitions to the Coast Guard must be submitted in writing, via the Coast Guard official who issued the requirement to amend the response plan, within 5 days of receipt of the notice.

(g) Except as required in paragraph (c) of this section, amendments to personnel and telephone number lists included in the response plan do not require prior Coast Guard approval.

(h) The Coast Guard and all other holders of the response plan shall be advised of any revisions to personnel and telephone numbers and provided a copy of these revisions as they occur.

(i) If required by §§ 155.1035(i), 155.1040(j), and 155.1050 (k) and (l), a new or existing vessel owner or operator must submit the required dispersant and aerial oil tracking resource revisions to a previously submitted or approved plan, made pursuant to §§ 155.1035(i), 155.1040(j), and 155.1050(k) and (l), to Coast Guard Headquarters, Office of Vessel Activities (CG–543) and all other holders of the response plan for information or approval no later than February 22, 2011.

[CGD 91–034, 61 FR 1081, Jan. 12, 1996, as amended by CGD 96–026, 61 FR 33666, June 28, 1996; CGD 97–023, 62 FR 33364, June 19, 1997; USCG–2002–12471, 67 FR 41333, June 18, 2002; USCG–2008–0179, 73 FR 35015, June 19, 2008; USCG–2001–8661, 74 FR 45029, Aug. 31, 2009; USCG–2010–0351, 75 FR 36285, June 25, 2010]

## Subpart E—Additional Response Plan Requirements for Tankers Loading Cargo at a Facility Permitted Under the Trans-Alaska Pipeline Authorization Act

SOURCE: CGD 91–034, 61 FR 1097, Jan. 12, 1996, unless otherwise noted.

### § 155.1110 Purpose and applicability.

(a) This subpart establishes oil spill response planning requirements for an owner or operator of a tanker loading cargo at a facility permitted under the Trans-Alaska Pipeline Authorization Act (TAPAA) (43 U.S.C. 1651 *et seq.*) in Prince William Sound, Alaska, in addition to the requirements of subpart D of this part. The requirements of this subpart are intended for use in developing response plans and identifying response resources during the planning process, they are not performance standards.

(b) The information required in this subpart must be included in a Prince William Sound geographic-specific appendix to the vessel response plan required by subpart D of this part.

### § 155.1115 Definitions.

Except as provided in this section, the definitions in § 155.1020 apply to this subpart.

*Prince William Sound* means all State and Federal waters within Prince William Sound, Alaska, including the approach to Hinchinbrook Entrance out to and encompassing Seal Rock.

### § 155.1120 Operating restrictions and interim operating authorization.

The owner or operator of a tanker to which this subpart applies may not load cargo at a facility permitted under the Trans-Alaska Pipeline Authorization Act unless the requirements of this subpart and § 155.1025 have been met. The owner or operator of such a tanker shall certify to the Coast Guard that they have provided, through an oil spill removal organization required by § 155.1125, the necessary response resources to remove, to the maximum extent practicable, a worst case discharge or a discharge of 200,000 barrels of oil, whichever is greater, in Prince William Sound, AK.

### § 155.1125 Additional response plan requirements.

(a) The owner or operator of a tanker subject to this subpart shall include the requirements of this section in the Prince William Sound geographic-specific appendix required by subpart D of this part.

(1) The response plan must include identification of an oil spill removal organization that shall—

(i) Perform response activities;

(ii) Provide oil spill removal and containment training, including training in the operation of prepositioned equipment, for personnel, including local residents and fishermen, from the following locations in Prince William Sound—

(A) Valdez;

(B) Tatitlek;

(C) Cordova;

(D) Whittier;

(E) Chenega; and

(F) Fish hatcheries located at Port San Juan, Main Bay, Esther Island, Cannery Creek, and Solomon Gulch.

(iii) Consist of sufficient numbers of trained personnel with the necessary technical skills to remove, to the maximum extent practicable, a worst case discharge or a discharge of 200,000 barrels of oil, whichever is greater;

(iv) Provide a plan for training sufficient numbers of additional personnel to remove, to the maximum extent practicable, a worst case discharge or a discharge of 200,000 barrels of oil, whichever is greater; and

(v) Address the responsibilities required in § 155.1035(d)(4).

(2) The response plan must include exercise procedures that must—

(i) Provide two exercises of the oil spill removal organization each year to ensure prepositioned equipment and trained personnel required under this subpart perform effectively;

(ii) Provide for both announced and unannounced exercises; and

(iii) Provide for exercises that test either the entire appendix or individual components.

(3) The response plan must identify a testing, inspection, and certification program for the prepositioned response

equipment required in § 155.1130 that must provide for—

(i) Annual testing and equipment inspection in accordance with the manufacturer's recommended procedures, to include—

(A) Start-up and running under load of all electrical motors, pumps, power packs, air compressors, internal combustion engines, and oil recovery devices; and

(B) Removal of no less than one-third of required boom from storage annually, such that all boom will have been removed and examined within a period of 3 years;

(ii) Records of equipment tests and inspection; and

(iii) Use of an independent entity to certify that the equipment is on-site and in good operating condition and that required tests and inspections have been performed. The independent entity must have appropriate training and expertise to provide this certification.

(4) The response plan must identify and give the location of the prepositioned response equipment required in § 155.1130 including the make, model, and effective daily recovery rate of each oil recovery resource.

(b) The owner or operator shall submit to the COTP for approval, no later than September 30th of each calendar year, a schedule for the training and exercises required by the geographic-specific appendix for Prince William Sound for the following calendar year.

(c) All records required by this section must be available for inspection by the Coast Guard and must be maintained for a period of 3 years.

### § 155.1130 Requirements for prepositioned response equipment.

The owner or operator of a tanker subject to this subpart shall provide the following prepositioned response equipment, located within Prince William Sound, in addition to that required by § 155.1035:

(a) On-water recovery equipment with a minimum effective daily recovery capacity of 30,000 barrels, capable of being on scene within 6 hours of notification of a discharge.

(b) On-water storage capacity of 100,000 barrels, capable of being on scene within 6 hours of notification of a discharge.

(c) Additional on-water recovery equipment with a minimum effective daily recovery capacity of 40,000 barrels capable of being on scene within 18 hours of notification of a discharge.

(d) On-water storage capacity of 300,000 barrels for recovered oily material, capable of being on scene within 24 hours of notification of a discharge.

(e) On-water oil recovery devices and storage equipment located in communities and at strategic locations.

(f) For sufficient protection of the environment in the locations identified in § 155.1125(a)(1)(ii)—

(1) Boom appropriate for the specific locations;

(2) Sufficient boats to deploy boom and sorbents;

(3) Sorbents including booms, sweeps, pads, blankets, drums and plastic bags;

(4) Personnel protective clothing and equipment;

(5) Survival equipment;

(6) First aid supplies;

(7) Buckets, shovels, and various other tools;

(8) Decontamination equipment;

(9) Shoreline cleanup equipment;

(10) Mooring equipment;

(11) Anchored buoys at appropriate locations to facilitate the positioning of defensive boom; and

(12) Other appropriate removal equipment for the protection of the environment as identified by the COTP.

(g) For each oil-laden tanker, an escorting response vessel which is fitted with skimming and on board storage capabilities practicable for the initial oil recovery planned for a cleanup operation, as identified by the oil spill removal organization.

(h) Lightering resources required in subpart I of this part capable of arriving on scene within 6 hours of notification of a discharge.

[CGD 91–034, 61 FR 1097, Jan. 12, 1996, as amended by USCG–2009–0416, 74 FR 27441, June 10, 2009]

### § 155.1135 Response plan development and evaluation criteria.

For tankers subject to this subpart, the following response times must be used in determining the on-scene arrival time in Prince William Sound, for

the response resources required by § 155.1050:

| | Tier 1 | Tier 2 | Tier 3 |
|---|---|---|---|
| Prince William Sound. | 12 hrs ..... | 24 hrs ..... | 36 hrs |

### § 155.1145 Submission and approval procedures.

An appendix prepared under this subpart must be submitted and approved in accordance with § 155.1065.

### § 155.1150 Plan revision and amendment procedures.

An appendix prepared and submitted under this subpart must be revised and amended, as necessary, in accordance with § 155.1070.

## Subpart F—Response plan requirements for vessels carrying animal fats and vegetable oils as a primary cargo

SOURCE: CGD 91–034, 61 FR 1098, Jan. 12, 1996, unless otherwise noted.

### § 155.1210 Purpose and applicability.

This subpart establishes oil spill response planning requirements for an owner or operator of a vessel carrying animal fats and vegetable oils as a primary cargo. The requirements of this subpart are intended for use in developing response plans and identifying response resources during the planning process. They are not performance standards.

### § 155.1225 Response plan submission requirements.

An owner or operator of a vessel carrying animal fats and vegetable oils as a primary cargo shall submit a response plan in accordance with the requirements of this subpart, and with all sections of subpart D of this part, except §§ 155.1050 and 155.1052.

### § 155.1230 Response plan development and evaluation criteria.

(a) Owners and operators of vessels that carry animal fats or vegetable oils as a primary cargo must provide information in their plan that identifies—

(1) Procedures and strategies for responding to a worst case discharge of animal fats or vegetable oils to the maximum extent practicable; and

(2) Sources of the equipment and supplies necessary to contain, recover, and mitigate such a discharge.

(b) An owner or operator of a vessel carrying animal fats or vegetable oils as a primary cargo must ensure that any equipment identified in a response plan is capable of operating in the conditions expected in the geographic area(s) in which the vessel operates using the criteria in Table 1 of Appendix B of this part. When evaluating the operability of equipment, the vessel owner or operator must consider limitations that are identified in the Area Contingency Plans for the COTP zones in which the vessel operates, including—

(1) Ice conditions;

(2) Debris;

(3) Temperature ranges; and

(4) Weather-related visibility.

(c) The owner or operator of a vessel carrying animal fats or vegetable oils as a primary cargo must identify in the response plan and ensure, through contract or other approved means, the availability of required equipment including—

(1) Containment boom, sorbent boom, or other methods for containing oil floating on the surface or to protect shorelines from impact;

(2) Oil recovery devices appropriate for the type of animal fats or vegetable oils carried; and

(3) Other appropriate equipment necessary to respond to a discharge involving the type of animal fats or vegetable oils carried.

(d) Response resources identified in a response plan under paragraph (c) of this section must be capable of arriving on-scene within the applicable Tier 1 response times specified in this paragraph. An oil spill removal organization may not be listed in the plan unless the organization has provided written consent to be listed in the plan as an available resource. Response times from the time of discovery of a discharge are as follows:

| | Tier 1 | Tier 2 | Tier 3 |
|---|---|---|---|
| Higher volume port area. | 12 hrs ..... | N/A ..... | N/A |
| Great Lakes ..... | 18 hrs ..... | N/A ..... | N/A |
| All other rivers and canals, inland, nearshore, and offshore areaas. | 24 hrs ..... | N/A ..... | N/A |
| Open ocean (plus travel time from shore). | 24 hrs+ .... | N/A ..... | N/A |

(e) The owner or operator of a vessel carrying animal fats or vegetable oils as a primary cargo must identify in the response plan and ensure the availability of the following resources through contract or other approved means:

(1) A salvage company with appropriate expertise and equipment.

(2) A company with vessel firefighting capability that will respond to casualties in the area(s) in which the vessel is operating.

(f) Vessel owners or operators must identify intended sources of the resources required under paragraph (e) of this section capable of being deployed to the areas in which the vessel will operate. A company may not be listed in the plan unless the company has provided written consent to be listed in the plan as an available resource. To meet this requirement in a response plan submitted for approval or reapproval on or after February 18, 1998, the vessel owner or operator must identify both the intended sources of this capability and demonstrate that the resources are capable of being deployed to the port nearest to the area where the vessel operates within 24 hours of discovery of a discharge.

(g) The owner or operator of a vessel carrying animal fats or vegetable oils as a primary cargo must identify in the response plan, and ensure the availability of, through contract or other approved means, certain resources required by subpart D, §155.1035(c)(5)(ii) and §155.1040(c)(5)(i), as applicable.

(1) Resources must include—

(i) Fendering equipment;

(ii) Transfer hoses and connection equipment; and

(iii) Portable pumps and ancillary equipment necessary to offload the vessel's largest cargo tank in 24 hours of continuous operation.

(2) Resources must be capable of reaching the locations in which the vessel operates within the stated times following notification:

(i) Inland, nearshore, and Great Lakes waters—12 hours.

(ii) Offshore waters and rivers and canals—18 hours.

(iii) Open ocean waters—36 hours.

(3) For barges operating in rivers and canals as defined in this subpart, the requirements of this paragraph (g)(3) may be met by listing resources capable of being deployed in an area within the response times in paragraph (g)(2) of this section. A vessel owner or operator may not identify such resources in a plan unless the response organization has provided written consent to be identified in a plan as an available resource.

(h) The response plan for a vessel that is located in any environment with year-round preapproval for use of dispersants suitable for animal fats and vegetable oils and that handles, stores, or transports animal fats or vegetable oils may request a credit for up to 25 percent of the worst case planning volume set forth by subpart D of this part. To receive this credit, the vessel owner or operator must identify in the plan and ensure, by contract or other approved means, the availability of specified resources to apply the dispersants and to monitor their effectiveness. To extent of the credit will be based on the volumes of the dispersant available to sustain operations at the manufacturers' recommended dosage rates. Other spill mitigation techniques, including mechanical dispersal, may be identified in the response plan, provided they are in accordance with the NCP and the applicable ACP. Resources identified for plan credit should be capable of being on scene within 12 hours of a discovery of a discharge. Identification of these resources does not imply that they will be authorized for use. Actual authorization for use during the spill response will be governed by the provisions of the NCP and the applicable ACP.

## Subpart G—Response Plan Requirements for Vessels Carrying Other Non-Petroleum Oils as a Primary Cargo

SOURCE: CGD 91–034, 61 FR 1099, Jan. 12, 1996, unless otherwise noted.

### § 155.2210 Purpose and applicability.

This subpart establishes oil spill response planning requirements for an owner or operator of a vessel carrying other non-petroleum oils as a primary cargo. The requirements of this subpart are intended for use in developing response plans and identifying response resources during the planning process. They are not performance standards.

### § 155.2225 Response plan submission requirements.

An owner or operator of a vessel carrying other non-petroleum oils as a primary cargo shall submit a response plan in accordance with the requirements of this subpart, and with all sections of subpart D of this part, except §§ 155.1050 and 155.1052.

### § 155.2230 Response plan development and evaluation criteria.

(a) Owners and operators of vessels that carry other non-petroleum oil as a primary cargo must provide information in their plan that identifies—

(1) Procedures and strategies for responding to a worst case discharge of other non-petroleum oils to the maximum extent practicable; and

(2) Sources of the equipment and supplies necessary to contain, recover, and mitigate such a discharge.

(b) An owner or operator of a vessel carrying other non-petroleum oil as a primary cargo must ensure that any equipment identified in a response plan is capable of operating in the conditions expected in the geographic area(s) in which the vessel operates using the criteria in Table 1 of Appendix B of this part. When evaluating the operability of equipment, the vessel owner or operator must consider limitations that are identified in the Area Contingency Plans for the COTP zones in which the vessel operates, including—

(1) Ice conditions;

(2) Debris;

(3) Temperature ranges; and

(4) Weather-related visibility.

(c) The owner or operator of a vessel carrying other non-petroleum oil as a primary cargo must identify in the response plan and ensure, through contract or other approved means, the availability of required equipment including—

(1) Containment boom, sorbent boom, or other methods for containing oil floating on the surface or to protect shorelines from impact;

(2) Oil recovery devices appropriate for the type of other non-petroleum oil carried; and

(3) Other appropriate equipment necessary to respond to a discharge involving the type of other non-petroleum oil carried.

(d) Response resources identified in a response plan under paragraph (c) of this section must be capable of arriving on-scene within the applicable Tier 1 response times specified in this paragraph. An oil spill removal organization may not be listed in the plan unless the organization has provided written consent to be listed in the plan as an available resource. Response times from the time of discovery of a discharge are as follow:

| | Tier 1 | Tier 2 | Tier 3 |
|---|---|---|---|
| Higher volume port area. | 12 hrs ..... | N/A ..... | N/A |
| Great Lakes ..... | 18 hrs ..... | N/A ..... | N/A |
| All other rivers and canals, inland, nearshore, and offshore areas. | 24 hrs ..... | N/A ..... | N/A |
| Open ocean (plus travel time from shore). | 24 hrs+ .... | N/A ..... | N/A |

(e) The owner or operator of a vessel carrying other non-petroleum oil as a primary cargo must identify in the response plan and ensure the availability of the following resources through contract or other approved means:

(1) A salvage company with appropriate expertise and equipment.

(2) A company with vessel firefighting capability that will respond to casualties in the area(s) in which the vessel is operating.

(f) Vessel owners or operators must identify intended sources of the resources required under paragraph (e) of

this section capable of being deployed to the areas in which the vessel will operate. A company may not be listed in the plan unless the company has provided written consent to be listed in the plan as an available resource. To meet this requirement in a response plan submitted for approval or reapproval on or after February 18, 1998, the vessel owner or operator must identify both the intended sources of this capability and demonstrate that the resources are capable of being deployed to the port nearest to the area where the vessel operates within 24 hours of discovery of a discharge.

(g) The owner or operator of a vessel carrying other non-petroleum oil as a primary cargo must identify in the response plan, and ensure the availability of, through contract or other approved means, certain resources required by subpart D of this part, § 155.1035(c)(5)(ii) and § 155.1040(c)(5)(i) of this part, as applicable.

(1) Resources must include—

(i) Fendering equipment;

(ii) Transfer hoses and connection equipment; and

(iii) Portable pumps and ancillary equipment necessary to offload the vessel's largest cargo tank in 24 hours of continuous operation.

(2) Resources must be capable of reaching the locations in which the vessel operates within the stated times following notification:

(i) Inland, nearshore, and Great Lakes waters—12 hours.

(ii) Offshore waters and rivers and canals—18 hours.

(iii) Open ocean waters—36 hours.

(3) For barges operating in rivers and canals as defined in this subpart, the requirements of this paragraph (g)(3) may be met by listing resources capable of being deployed in an area within the response times in paragraph (g)(2) of this section. A vessel owner or operator may not identify such resources in a plan unless the response organization has provided written consent to be identified in a plan as an available resource.

(h) The response plan for a vessel that is located in any environment with year-round preapproval for use of dispersants and that handles, stores, or transports other non-petroleum oils may request a credit for up to 25 percent of the worst case planning volume set forth by subpart D of this part. To receive this credit, the vessel owner or operator must identify in the plan and ensure, by contract or other approved means, the availability of specified resources to apply the dispersants and to monitor their effectiveness. The extent of the credit will be based on the volumes of the dispersant available to sustain operations at the manufacturers' recommended dosage rates. Identification of these resources does not imply that they will be authorized for use. Actual authorization for use during a spill response will be governed by the provisions of the NCP and the applicable ACP.

## Subpart H [Reserved]

## Subpart I—Salvage and Marine Firefighting

SOURCE: USCG–1998–3417, 73 FR 80649, Dec. 31, 2008, unless otherwise noted.

### § 155.4010 Purpose of this subpart.

(a) The purpose of this subpart is to establish vessel response plan *salvage* and *marine firefighting* requirements for vessels, that are carrying group I–IV oils, and that are required by § 155.1015 to have a vessel response plan. *Salvage* and *marine firefighting* actions can save lives, property, and prevent the escalation of potential oil spills to worst case discharge scenarios.

(b) A planholder must ensure by *contract or other approved means* that response resources are available to respond. However, the response criteria specified in the regulations (e.g., quantities of response resources and their arrival times) are planning criteria, not performance standards, and are based on assumptions that may not exist during an actual incident, as stated in 33 CFR 155.1010. Compliance with the regulations is based upon whether a covered response plan ensures that adequate response resources are available, not on whether the actual performance of those response resources after an incident meets specified arrival times or other planning criteria.

Failure to meet specified criteria during an actual spill response does not necessarily mean that the planning requirements of the Federal Water Pollution Control Act (FWPCA) (33 U.S.C. 1251–1376) and regulations were not met. The Coast Guard will exercise its enforcement discretion in light of all facts and circumstances.

### § 155.4015 Vessel owners and operators who must follow this subpart.

You must follow this subpart if your vessel carries group I–IV oils, and is required by § 155.1015 to have a vessel response plan.

### § 155.4020 Complying with this subpart.

(a) If you have an existing approved vessel response plan, you must have your vessel response plan updated and submitted to the Coast Guard by February 22, 2011.

(b) All new or existing vessels operating on the navigable waters of the United States or transferring oil in a port or place subject to the jurisdiction of the United States, that meet the applicability requirements of § 155.1015, that do not have an approved vessel response plan, must comply with § 155.1065.

(c) Your vessel may not conduct oil transport or transfer operations if—

(1) You have not submitted a plan to the Coast Guard in accordance with § 155.1065 prior to February 22, 2011;

(2) The Coast Guard determines that the response resources referenced in your plan do not meet the requirements of this subpart;

(3) The contracts or agreements cited in your plan have lapsed or are otherwise no longer valid;

(4) You are not operating in accordance with your plan; or

(5) The plan's approval has expired.

[USCG–1998–3417, 73 FR 80649, Dec. 31, 2008, as amended by USCG–2001–8661, 74 FR 45029, Aug. 31, 2009]

### § 155.4025 Definitions.

For the purposes of this subpart, the following definitions apply:

*Assessment of structural stability* means completion of a vessel's stability and structural integrity assessment through the use of a salvage software program. The data used for the calculations would include information collected by the on-scene salvage professional. The assessment is intended to allow sound decisions to be made for subsequent salvage efforts. In addition, the assessment must be consistent with the conditions set forth in 33 CFR 155.240 and 155.245, as applicable.

*Boundary lines* are lines drawn following the general trend of the seaward, highwater shorelines and lines continuing the general trend of the seaward, highwater shorelines across entrances to small bays, inlets and rivers as defined in 46 CFR 7.5(c).

*Captain of the Port (COTP) city* means the city which is the geographical location of the COTP office. COTP city locations are listed in 33 CFR part 3.

*Continental United States (CONUS)* means the contiguous 48 States and the District of Columbia.

*Contract or other approved means* is any one of the following:

(1)(i) A written contractual agreement between a vessel owner or operator and resource provider. This agreement must expressly provide that the resource provider is capable of, and intends to commit to, meeting the plan requirements.

(ii) A written certification that the personnel, equipment, and capabilities required by this subpart are available and under the vessel owner or operator's direct control. If the planholder has personnel, equipment and capabilities under their direct control, they need not contract those items with a resource provider.

(iii) An alternative approved by the Coast Guard (Commandant, Director of Prevention Policy (CG–54)) and submitted in accordance with 33 CFR 155.1065(f).

(2) As part of the contract or other approved means you must develop and sign, with your resource provider, a written funding agreement. This funding agreement is to ensure that salvage and marine firefighting responses are not delayed due to funding negotiations. The funding agreement must include a statement of how long the agreement remains in effect, and must be provided to the Coast Guard for VRP approval. In addition any written

agreement with a public resource provider must be included in the planholder's Vessel Response Plan (VRP).

*Diving services support* means divers and their equipment to support salvage operations. This support may include, but not be limited to, underwater repairs, welding, placing lifting slings, or performing damage assessments.

*Emergency lightering* is the process of transferring oil between two ships or other floating or land-based receptacles in an emergency situation and may require pumping equipment, transfer hoses, fenders, portable barges, shore based portable tanks, or other equipment that circumstances may dictate.

*Emergency towing*, also referred to as rescue towing, means the use of towing vessels that can pull, push or make-up alongside a vessel. This is to ensure that a vessel can be stabilized, controlled or removed from a grounded position. Towing vessels must have the proper horsepower or bollard pull compatible with the size and tonnage of the vessel to be assisted.

*External emergency transfer operations* means the use of external pumping equipment placed on board a vessel to move oil from one tank to another, when the vessel's own transfer equipment is not working.

*External firefighting teams* means trained firefighting personnel, aside from the crew, with the capability of boarding and combating a fire on a vessel.

*External vessel firefighting systems* mean firefighting resources (personnel and equipment) that are capable of combating a fire from other than on board the vessel. These resources include, but are not limited to, fire tugs, portable fire pumps, airplanes, helicopters, or shore side fire trucks.

*Funding agreement* is a written agreement between a resource provider and a planholder that identifies agreed upon rates for specific equipment and services to be made available by the resource provider under the agreement. The funding agreement is to ensure that salvage and marine firefighting responses are not delayed due to funding negotiations. This agreement must be part of the contract or other approved means and must be submitted for review along with the VRP.

*Great Lakes* means Lakes Superior, Michigan, Huron, Erie, and Ontario, their connecting and tributary waters, the Saint Lawrence River as far as Saint Regis, and adjacent port areas.

*Heavy lift* means the use of a salvage crane, A-frames, hydraulic jacks, winches, or other equipment for lifting, righting, or stabilizing a vessel.

*Inland area* means the area shoreward of the boundary lines defined in 46 CFR part 7, except that in the Gulf of Mexico, it means the area shoreward of the lines of demarcation (COLREG lines) as defined in §§ 80.740 through 80.850 of this chapter. The inland area does not include the Great Lakes.

*Making temporary repairs* means action to temporarily repair a vessel to enable it to safely move to a shipyard or other location for permanent repairs. These services include, but are not limited to, shoring, patching, drill stopping, or structural reinforcement.

*Marine firefighting* means any firefighting related act undertaken to assist a vessel with a potential or actual fire, to prevent loss of life, damage or destruction of the vessel, or damage to the marine environment.

*Marine firefighting pre-fire plan* means a plan that outlines the responsibilities and actions during a marine fire incident. The principle purpose is to explain the resource provider's role, and the support which can be provided, during marine firefighting incidents. Policies, responsibilities and procedures for coordination of on-scene forces are provided in the plan. It should be designed for use in conjunction with other state, regional and local contingency and resource mobilization plans.

*Nearshore area* means the area extending seaward 12 miles from the boundary lines defined in 46 CFR part 7, except in the Gulf of Mexico. In the Gulf of Mexico, a nearshore area is one extending seaward 12 miles from the line of demarcation (COLREG lines) as defined in §§ 80.740 through 80.850 of this chapter.

*Offshore area* means the area up to 38 nautical miles seaward of the outer boundary of the nearshore area.

*On-site fire assessment* means that a marine firefighting professional is on

scene, at a safe distance from the vessel or on the vessel, who can determine the steps needed to control and extinguish a marine fire in accordance with a vessel's stability and structural integrity assessment if necessary.

*On-site salvage assessment* means that a salvage professional is on scene, at a safe distance from the vessel or on the vessel, who has the ability to assess the vessel's stability and structural integrity. The data collected during this assessment will be used in the salvage software calculations and to determine necessary steps to salve the vessel.

*Other refloating methods* means those techniques for refloating a vessel aside from using pumps. These services include, but are not limited to, the use of pontoons, air bags or compressed air.

*Outside continental United States (OCONUS)* means Alaska, Hawaii, the Commonwealth of Puerto Rico, Guam, American Samoa, the United States Virgin Islands, the Commonwealth of the Northern Marianas, and any other territory or possession of the United States.

*Primary resource provider* means a resource provider listed in the vessel response plan as the principal entity contracted for providing specific salvage and/or marine firefighting services and resources, when multiple resource providers are listed for that service, for each of the COTP zones in which a vessel operates. The primary resource provider will be the point of contact for the planholder, the Federal On Scene Coordinator (FOSC) and the Unified Command, in matters related to specific resources and services, as required in § 155.4030(a).

*Remote assessment and consultation* means contacting the salvage and/or marine firefighting resource providers, by phone or other means of communications to discuss and assess the situation. The person contacted must be competent to consult on a determination of the appropriate course of action and initiation of a response plan.

*Resource provider* means an entity that provides personnel, equipment, supplies, and other capabilities necessary to perform salvage and/or marine firefighting services identified in the response plan, and has been arranged by contract or other approved means. The resource provider must be selected in accordance with § 155.4050. For marine firefighting services, resource providers can include public firefighting resources as long as they are able, in accordance with the requirements of § 155.4045(d), and willing to provide the services needed.

*Salvage* means any act undertaken to assist a vessel in potential or actual danger, to prevent loss of life, damage or destruction of the vessel and release of its contents into the marine environment.

*Salvage plan* means a plan developed to guide salvage operations except those identified as specialized salvage operations.

*Special salvage operations plan* means a salvage plan developed to carry out a specialized salvage operation, including heavy lift and/or subsurface product removal.

*Subsurface product removal* means the safe removal of oil from a vessel that has sunk or is partially submerged underwater. These actions can include pumping or other means to transfer the oil to a storage device.

*Underwater vessel and bottom survey* means having salvage resources on scene that can perform examination and analysis of the vessel's hull and equipment below the water surface. These resources also include the ability to determine the bottom configuration and type for the body of water. This service can be accomplished through the use of equipment such as sonar, magnetometers, remotely operated vehicles or divers. When divers are used to perform these services, the time requirements for this service apply and not those of diving services support.

### § 155.4030 Required salvage and marine firefighting services to list in response plans.

(a) You must identify, in the geographical-specific appendices of your VRP, the *salvage* and *marine firefighting* services listed in Table 155.4030(b)—Salvage and Marine Firefighting Services and Response Timeframes. Additionally, you must list those *resource providers* that you have contracted to provide these services. You may list multiple *resource providers* for each service, but you must identify which one is

your primary *resource provider* for each Captain of the Port (COTP) zone in which you operate. A method of contact, consistent with the requirements in §§155.1035(e)(6)(ii) and 155.1040(e)(5)(ii), must also be listed, in the geographical-specific appendices of your VRP, adjacent to the name of the *resource provider*.

(b) Table 155.4030(b) lists the required *salvage* and *marine firefighting* services and response timeframes.

TABLE 155.4030(b)—SALVAGE AND MARINE FIREFIGHTING SERVICES AND RESPONSE TIMEFRAMES

| Service | | Location of incident response activity timeframe | |
|---|---|---|---|
| (1) Salvage | | CONUS: nearshore area; inland waters; Great Lakes; and OCONUS: < or = 12 miles from COTP city (hours) | CONUS: offshore area; and OCONUS: < or = 50 miles from COTP city (hours) |
| (i) *Assessment & Survey:* | | | |
| (A) Remote assessment and consultation | | 1 | 1 |
| (B) Begin assessment of structural stability | | 3 | 3 |
| (C) On-site salvage assessment | | 6 | 12 |
| (D) Assessment of structural stability | | 12 | 18 |
| (E) Hull and bottom survey | | 12 | 18 |
| (ii) *Stabilization:* | | | |
| (A) Emergency towing | | 12 | 18 |
| (B) Salvage plan | | 16 | 22 |
| (C) External emergency transfer operations | | 18 | 24 |
| (D) Emergency lightering | | 18 | 24 |
| (E) Other refloating methods | | 18 | 24 |
| (F) Making temporary repairs | | 18 | 24 |
| (G) Diving services support | | 18 | 24 |
| (iii) *Specialized Salvage Operations:* | | | |
| (A) Special salvage operations plan | | 18 | 24 |
| (B) Subsurface product removal | | 72 | 84 |
| (C) Heavy lift [1] | | Estimated | Estimated |
| (2) Marine firefighting | At pier (hours) | CONUS: Nearshore area; inland waters; Great Lakes; and OCONUS: < or = 12 miles from COTP city (hours) | CONUS: Offshore area; and OCONUS: < or = 50 miles from COTP city (hours) |
| (i) *Assessment & Planning:* | | | |
| (A) Remote assessment and consultation | 1 | 1 | 1 |
| (B) On-site fire assessment | 2 | 6 | 12 |

TABLE 155.4030(b)—SALVAGE AND MARINE FIREFIGHTING SERVICES AND RESPONSE TIMEFRAMES—Continued

| | | | |
|---|---|---|---|
| (ii) *Fire Suppression:* | | | |
| (A) External firefighting teams | 4 | 8 | 12 |
| (B) External vessel firefighting systems | 4 | 12 | 18 |

[1] Heavy lift services are not required to have definite hours for a response time. The planholder must still contract for heavy lift services, provide a description of the heavy lift response and an estimated response time when these services are required, however, none of the timeframes listed in the table in § 155.4030(b) will apply to these services.

(c) *Integration into the response organization*. You must ensure that all *salvage* and *marine firefighting resource providers* are integrated into the response organizations listed in your plans. The response organization must be consistent with the requirements set forth in §§ 155.1035(d), 155.1040(d) and 155.1045(d).

(d) *Coordination with other response resource providers, response organizations and OSROs*. Your plan must include provisions on how the salvage and marine firefighting resource providers will coordinate with other response resources, response organizations, and OSROs. For example, you will need to identify how salvage and marine firefighting assessment personnel will coordinate response activity with oil spill removal organizations. For services that, by law, require public assistance, there must be clear guidelines on how service providers will interact with those organizations. The information contained in the response plan must be consistent with applicable Area Contingency Plans (ACPs) and the National Oil and Hazardous Substances Pollution Contingency Plan as found in § 155.1030(h).

(e) *Ensuring the proper emergency towing vessels are listed in your VRP*. Your VRP must identify towing vessels with the proper characteristics, horsepower, and bollard pull to tow your vessel(s). These towing vessels must be capable of operating in environments where the winds are up to 40 knots.

(f) *Ensuring the proper type and amount of transfer equipment is listed in your VRP*. Your salvage resource provider must be able to bring on scene a pumping capability that can offload the vessel's largest cargo tank in 24 hours of continuous operation. This is required for both emergency transfer and lightering operations.

(g) *Ensuring firefighting equipment is compatible with your vessel*. Your plan must list the proper type and amount of extinguishing agent needed to combat a fire involving your vessel's cargo, other contents, and superstructure. If your primary extinguishing agent is foam or water, you must identify resources in your plan that are able to pump, for a minimum of 20 minutes, at least 0.016 gallons per minute per square foot of the deck area of your vessel, or an appropriate rate for spaces that this rate is not suitable for and if needed, an adequate source of foam. These resources described are to be supplied by the resource provider, external to the vessel's own firefighting system.

(h) *Ensuring the proper subsurface product removal*. You must have subsurface product removal capability if your vessel(s) operates in waters of 40 feet or more. Your resource provider must have the capability of removing cargo and fuel from your sunken vessel to a depth equal to the maximum your vessel operates in up to 150 feet.

[USCG–1998–3417, 73 FR 80649, Dec. 31, 2008; 74 FR 7648, Feb. 19, 2009; USCG–2010–0351, 75 FR 36285, June 25, 2010]

### § 155.4032 Other resource provider considerations.

(a) *Use of resource providers not listed in the VRP*. If another resource provider, not listed in the approved plan for the specific service required, is to be contracted for a specific response, justification for the selection of that resource provider needs to be provided to, and approved by, the FOSC. Only under exceptional circumstances will the FOSC authorize deviation from the resource provider listed in the approved vessel response plan in instances where that would best affect a more successful response.

(b) *Worker health and safety*. Your resource providers must have the capability to implement the necessary engineering, administrative, and personal protective equipment controls to safeguard their workers when providing salvage and marine firefighting services, as found in 33 CFR 155.1055(e) and 29 CFR 1910.120(q).

### § 155.4035 Required pre-incident information and arrangements for the salvage and marine firefighting resource providers listed in response plans.

(a) You must provide the information listed in §§ 155.1035(c) and 155.1040(c) to your salvage and marine firefighting resource providers.

(b) *Marine firefighting pre-fire plan*. (1) You must prepare a vessel pre-fire plan in accordance with NFPA 1405, Guide

for Land-Based Firefighters Who Respond to Marine Vessel Fires, Chapter 9 (Incorporation by reference, *see* § 155.140). If the planholder's vessel pre-fire plan is one that meets another regulation, such as SOLAS Chapter II–2, Regulation 15, or international standard, a copy of that specific fire plan must also be given to the resource provider(s) instead of the NFPA 1405 pre-fire plan, and be attached to the VRP.

(2) The marine firefighting resource provider(s) you are required to identify in your plan must be given a copy of the plan. Additionally, they must certify in writing to you that they find the plan acceptable and agree to implement it to mitigate a potential or actual fire.

(3) If a marine firefighting resource provider subcontracts to other organizations, each subcontracted organization must also receive a copy of the vessel pre-fire plan.

[USCG–1998–3417, 73 FR 80649, Dec. 31, 2008, as amended by USCG–2010–0351, 75 FR 36285, June 25, 2010]

### § 155.4040 Response times for each salvage and marine firefighting service.

(a) You must ensure, by contract or other approved means, that your resource provider(s) is capable of providing the services within the required timeframes.

(1) If your vessel is at the pier or transiting a COTP zone within the continental United States (CONUS), the timeframes in Table 155.4030(b) apply as listed.

(2) If your vessel is at the pier or transiting a COTP zone outside the continental United States (OCONUS), the timeframes in Table 155.4030(b) apply as follows:

(i) Inland waters and nearshore area timeframes apply from the COTP city out to and including the 12 mile point.

(ii) Offshore area timeframes apply from 12 to 50 miles outside the COTP city.

(3) If your vessel transits within an OCONUS COTP zone that is outside the areas described in paragraph (a)(2) of this section, but within the inland waters or the nearshore or offshore area, you must submit in writing, in your plan, the steps you will take to address salvage and marine firefighting needs in the event these services are required.

(b) The timeframe starts when anyone in your response organization receives notification of a potential or actual incident. It ends when the service reaches the ship, the outer limit of the nearshore area, the outer limit of the offshore area, the 12 or 50-mile point from the COTP city, or a point identified in your response plan for areas OCONUS.

(c) Table 155.4040(c) provides additional amplifying information for vessels transiting within the nearshore and offshore areas of CONUS or within 50 miles of an OCONUS COTP city.

TABLE 155.4040(c)—RESPONSE TIMEFRAME END POINTS

| Service | Response timeframe ends when |
|---|---|
| (1) Salvage: | |
| (i) Remote assessment and consultation. | Salvor is in voice contact with Qualified Individual (QI)/Master/Operator. |
| (ii) Begin assessment of structural stability. | A structural assessment of the vessel has been initiated. |
| (iii) On-site salvage assessment .. | Salvor on board vessel. |
| (iv) Assessment of structural stability. | Initial analysis is completed. This is a continual process, but at the time specified an analysis needs to be completed. |
| (v) Hull and bottom survey ..... | Survey completed. |
| (vi) Emergency towing ..... | Towing vessel on scene. |
| vii) Salvage plan ..... | Plan completed and submitted to Incident Commander/Unified Command. |
| (viii) External emergency transfer operations. | External pumps on board vessel. |
| (ix) Emergency lightering ..... | Lightering equipment on scene and alongside. |
| (x) Other refloating methods ..... | Salvage plan approved & resources on vessel. |
| (xi) Making temporary repairs ..... | Repair equipment on board vessel. |
| (xii) Diving services support ..... | Required support equipment & personnel on scene. |
| (xiii) Special salvage operations plan. | Plan completed and submitted to Incident Commander/Unified Command. |
| (xiv) Subsurface product removal | Resources on scene. |
| (xv) Heavy lift [1] ..... | Estimated. |

TABLE 155.4040(c)—RESPONSE TIMEFRAME END POINTS—Continued

| Service | Response timeframe ends when |
|---|---|
| (2) Marine Firefighting: | |
| (i) Remote assessment and consultation. | Firefighter in voice contact with QI/Master/Operator. |
| (ii) On-site fire assessment ..... | Firefighter representative on site. |
| (iii) External firefighting teams ..... | Team and equipment on scene. |
| (iv) External vessel firefighting systems. | Personnel and equipment on scene. |

[1] Heavy lift services are not required to have definite hours for a response time. The planholder must still contract for heavy lift services, provide a description of the heavy lift response and an estimated response time when these services are required, however, none of the timeframes listed in the table in § 155.4030(b) will apply to these services.

(d) *How to apply the timeframes to your particular situation*. To apply the timeframes to your vessel's situation, follow these procedures:

(1) Identify if your vessel operates CONUS or OCONUS.

(2) If your vessel is calling at any CONUS pier or an OCONUS pier within 50 miles of a COTP city, you must list the pier location by facility name or city and ensure that the marine firefighting resource provider can reach the locations within the specified response times in Table 155.4030(b).

(3) If your vessel is transiting within CONUS inland waters, nearshore or offshore areas or the Great Lakes, you must ensure the listed salvage and marine firefighting services are capable of reaching your vessel within the appropriate response times listed in Table 155.4030(b).

(4) If your vessel is transiting within 12 miles or less from an OCONUS COTP city, you must ensure the listed salvage and marine firefighting services are capable of reaching a point 12 miles from the harbor of the COTP city within the nearshore area response times listed in Table 155.4030(b).

(5) If your vessel is transiting between 12 and 50 miles from an OCONUS COTP city, you must ensure the listed salvage and marine firefighting services are capable of reaching a point 50 miles from the harbor of the COTP city within the offshore area response times listed in Table 155.4030(b).

(6) If your vessel transits inland waters or the nearshore or offshore areas OCONUS, but is more than 50 miles from a COTP city, you must still contract for salvage and marine firefighting services and provide a description of how you intend to respond and an estimated response time when these services are required, however, none of the time limits listed in Table 155.4030(b) will apply to these services.

### § 155.4045 Required agreements or contracts with the salvage and marine firefighting resource providers.

(a) You may only list resource providers in your plan that have been arranged by contract or other approved means.

(b) You must obtain written consent from the resource provider stating that they agree to be listed in your plan. This consent must state that the resource provider agrees to provide the services that are listed in §§ 155.4030(a) through 155.4030(h), and that these services are capable of arriving within the response times listed in Table 155.4030(b). This consent may be included in the contract with the resource provider or in a separate document.

(c) This written consent must be available to the Coast Guard for inspection. The response plan must identify the location of this written consent, which must be:

(1) On board the vessel; or

(2) With a qualified individual located in the United States.

(d) Public marine firefighters may only be listed out to the maximum extent of the public resource's jurisdiction, unless other agreements are in place. A public marine firefighting resource may agree to respond beyond their jurisdictional limits, but the Coast Guard considers it unreasonable to expect public marine firefighting resources to do this.

**§ 155.4050 Ensuring that the salvors and marine firefighters are adequate.**

(a) You are responsible for determining the adequacy of the resource providers you intend to include in your plan.

(b) When determining adequacy of the resource provider, you must select a resource provider that meets the following selection criteria to the maximum extent possible:

(1) *Resource provider* is currently working in response service needed.

(2) *Resource provider* has documented history of participation in successful salvage and/or marine firefighting operations, including equipment deployment.

(3) *Resource provider* owns or has contracts for equipment needed to perform response services.

(4) *Resource provider* has personnel with documented training certification and degree experience (Naval Architecture, Fire Science, etc.).

(5) *Resource provider* has 24-hour availability of personnel and equipment, and history of response times compatible with the time requirements in the regulation.

(6) *Resource provider* has on-going continuous training program. For marine firefighting providers, they meet the training guidelines in NFPA 1001, 1005, 1021, 1405, and 1561 (Incorporation by reference, see § 155.140), show equivalent training, or demonstrate qualification through experience.

(7) *Resource provider* has successful record of participation in drills and exercises.

(8) *Resource provider* has salvage or marine firefighting plans used and approved during real incidents.

(9) *Resource provider* has membership in relevant national and/or international organizations.

(10) *Resource provider* has insurance that covers the salvage and/or marine firefighting services which they intend to provide.

(11) *Resource provider* has sufficient up front capital to support an operation.

(12) *Resource provider* has equipment and experience to work in the specific regional geographic environment(s) that the vessel operates in (e.g., bottom type, water turbidity, water depth, sea state and temperature extremes).

(13) *Resource provider* has the logistical and transportation support capability required to sustain operations for extended periods of time in arduous sea states and conditions.

(14) *Resource provider* has the capability to implement the necessary engineering, administrative, and personal protective equipment controls to safeguard the health and safety of their workers when providing salvage and marine firefighting services.

(15) *Resource provider* has familiarity with the salvage and marine firefighting protocol contained in the local ACPs for each COTP area for which they are contracted.

(c) A *resource provider* need not meet all of the selection criteria in order for you to choose them as a provider. They must, however, be selected on the basis of meeting the criteria to the maximum extent possible.

(d) You must certify in your plan that these factors were considered when you chose your resource provider.

**§ 155.4052 Drills and exercises.**

(a) A vessel owner or operator required by §§ 155.1035 and 155.1040 to have a response plan shall conduct exercises as necessary to ensure that the plan will function in an emergency. Both announced and unannounced exercises must be included.

(b) The following are the minimum exercise requirements for vessels covered by this subpart:

(1) Remote assessment and consultation exercises, which must be conducted quarterly;

(2) Emergency procedures exercises, which must be conducted quarterly;

(3) Shore-based salvage and shore-based marine firefighting management team tabletop exercises, which must be conducted annually;

(4) Response provider equipment deployment exercises, which must be conducted annually;

(5) An exercise of the entire response plan, which must be conducted every three years. The vessel owner or operator shall design the exercise program so that all components of the response plan are exercised at least once every three years. All of the components do

not have to be exercised at one time; they may be exercised over the 3-year period through the required exercises or through an area exercise; and

(6) Annually, at least one of the exercises listed in § 155.4052(b)(2) and (4) must be unannounced. An unannounced exercise is one in which the personnel participating in the exercise have not been advised in advance of the exact date, time, or scenario of the exercise.

(7) Compliance with the National Preparedness for Response Exercise Program (PREP) Guidelines will satisfy the vessel response plan exercise requirements. These guidelines are available on the Internet at *https://Homeport.uscg.mil/exercises*. Once on that Web site, select the link for ''Preparedness for Response Exercise Program (PREP)'' and then select ''Preparedness for Response Exercise Program (PREP) Guidelines''. Compliance with an alternate program that meets the requirements of 33 CFR 155.1060(a), and has been approved under 33 CFR 155.1065 will also satisfy the vessel response plan exercise requirements.

**§ 155.4055 Temporary waivers from meeting one or more of the specified response times.**

(a) You may submit a request for a temporary waiver of a specific response time requirement, if you are unable to identify a resource provider who can meet the response time.

(b) Your request must be specific as to the COTP zone, operating environment, salvage or marine firefighting service, and response time.

(c) Emergency lightering requirements set forth in § 155.4030(b) will not be subject to the waiver provisions of this subpart.

(d) You must submit your request to the Commandant, Director of Prevention Policy (CG–54), via the local COTP for final approval. The local COTP will evaluate and comment on the waiver before forwarding the waiver request, via the District to the Commandant (CG–54) for final approval.

(e) Your request must include the reason why you are unable to meet the time requirements. It must also include how you intend to correct the shortfall, the time it will take to do so, and what arrangements have been made to provide the required response resources and their estimated response times.

(f) Commandant, Director of Prevention Policy (CG–54), will only approve waiver requests up to a specified time period, depending on the service addressed in the waiver request, the operating environment, and other relevant factors. These time periods are listed in Table 155.4055(g).

(g) Table 155.4055(g) lists the service waiver time periods.

TABLE 155.4055(g)—SERVICE WAIVER TIME PERIODS

| Service | Maximum waiver time period (years) |
|---|---|
| (1) Remote salvage assessment & consultation | 0 |
| (2) Remote firefighting assessment & consultation | 0 |
| (3) On-site salvage & firefighting assessment | 1 |
| (4) Hull and bottom survey | 2 |
| (5) Salvage stabilization services | 3 |
| (6) Fire suppression services | 4 |
| (7) Specialized salvage operations | 5 |

(h) You must submit your waiver request 30 days prior to any plan submission deadlines identified in this or any other subpart of part 155 in order for your vessel to continue oil transport or transfer operations.

APPENDIX A TO PART 155—SPECIFICATIONS FOR SHORE CONNECTION

[See §§ 340, 350, 370 and 380 of this part]

| Item | Description | Dimension |
|---|---|---|
| 1 | Outside diameter. | 215 mm. (8 in.). |
| 2 | Inside diameter | According to pipe outside diameter. |
| 3 | Bolt circle diameter. | 183 mm. (7 3/16 in.). |
| 4 | Slots in flange | 6 holes 22 mm. (7/8 in.) in diameter shall be equidistantly placed on a bolt circle of the above diameter, slotted to the flange periphery. The slot width is to be 22 mm. (7/8 in.). |
| 5 | Flange thickness. | 20 mm. (3/4 in.). |
| 6 | Bolts and nuts | 6, each of 20 mm. (3/4 in.) in diameter and of suitable length. |

The flange must be of steel having a flat face, with a gasket of oilproof material, and must be suitable for a service pressure of 6 kg./cm.2 (85 p.s.i.).

The steel materials used must meet the material specifications of standard B16.5, Steel Pipe Flanges and Flanged Fittings of the American National Standards Institute. (See § 154.106 of this chapter.)

[CGD 75–124, 45 FR 7176, Jan. 31, 1980]

## APPENDIX B TO PART 155—DETERMINING AND EVALUATING REQUIRED RESPONSE RESOURCES FOR VESSEL RESPONSE PLANS

### *1. Purpose*

1.1 The purpose of this appendix is to describe the procedures for identifying response resources to meet the requirements of subparts D, E, F, and G of this part. These guidelines will be used by the vessel owner or operator in preparing the response plan and by the Coast Guard to review vessel response plans. Response plans submitted under subparts F and G of this part will be evaluated under the guidelines in section 2 and Table 1 of this appendix.

### *2. Equipment Operability and Readiness*

2.1 All equipment identified in a response plan must be capable of operating in the conditions expected in the geographic area in which a vessel operates. These conditions vary widely based on the location and season. Therefore, it is difficult to identify a single stockpile of response equipment that will function effectively in every geographic location.

2.2 Vessels storing, handling, or transporting oil in more than one operating environment as indicated in Table 1 must identify equipment capable of successfully functioning in each operating environment. For example, vessels moving from the ocean to a river port must identify appropriate equipment designed to meet the criteria for transiting oceans, inland waterways, rivers, and canals. This equipment may be designed to operate in all of these environments or, more likely, different equipment may be designed for use in each area.

2.3 When identifying equipment for response plan credit, a vessel owner or operator must consider the inherent limitations in the operability of equipment components and response systems. The criteria in Table 1 of this appendix must be used for evaluating the operability in a given environment. These criteria reflect the general conditions in certain operating areas.

2.4 Table 1 of this appendix lists criteria for oil recovery devices and boom. All other equipment necessary to sustain or support response operations in a geographic area must be designed to function in the same conditions. For example, boats which deploy or support skimmers or boom must be capable of being safely operated in the significant wave heights listed for the applicable operating environment. The Coast Guard may require documentation that the boom identified in a response plan meets the criteria in Table 1 of this appendix. Absent acceptable documentation, the Coast Guard may require that the boom be tested to demonstrate that it meets the criteria in Table 1 of this appendix. Testing must be in accordance with certain American Society for Testing Materials (ASTM) standards [ASTM F 715 (incorporated by reference, see §155.140) Standard Methods of Testing Spill Control Barrier Membrane Materials], or other tests approved by the Coast Guard.

2.5 A vessel owner or operator must refer to the applicable Area Contingency Plan to determine if ice, debris, and weather-related visibility are significant factors in evaluating the operability of equipment. The Area Contingency Plan will also identify the average temperature ranges expected in a geographic area in which a vessel operates. All equipment identified in a response plan must be designed to operate within those conditions or ranges.

2.6 The requirements of subparts D, E, F, and G of this part establish response resource mobilization and response times. The location that the vessel operates farthest from the storage location of the response resources must be used to determine whether the resources are capable of arriving on scene within the time required. A vessel owner or operator shall include the time for notification, mobilization, and travel time of resources identified to meet the maximum most probable discharge and Tier 1 worst case discharge requirements. For subparts D and E of this part, tier 2 and 3 resources must be notified and mobilized as necessary to meet the requirements for arrival on scene. An on-water speed of 5 knots and a land speed of 35 miles per hour is assumed, unless the vessel owner or operator can demonstrate otherwise.

2.7 For subparts D and E of this part, in identifying equipment, the vessel owner or operator shall list the storage location, quantity, and manufacturer's make and model, unless the oil spill removal organization(s) providing the necessary response resources have been evaluated by the Coast Guard, and their capability has been determined to equal or exceed the response capability needed by the vessel. For oil recovery devices, the effective daily recovery capacity, as determined using section 6 of this appendix, must be included. For boom, the overall boom height (draft plus freeboard) must be included. A vessel owner or operator is responsible for ensuring that identified boom has compatible connectors.

2.8 For subparts F and G of this part, in identifying equipment, the vessel owner or operator shall list the storage location, quantity, and manufacturer's make and model, unless the oil spill removal organization(s) providing the necessary response resources have been evaluated by the Coast Guard, and their capability has been determined to equal or exceed the response capability needed by the vessel. For boom, the

overall boom height (draft plus freeboard) must be included. A vessel owner of operator is responsible for ensuring that identified boom has compatible connectors.

*3. Determining Response Resources Required for the Average Most Probable Discharge*

3.1 A vessel owner or operator shall identify and ensure, by contract or other approved means, that sufficient response resources are available to respond to the 50-barrel average most probable discharge at the point of an oil transfer involving a vessel that carries oil as a primary cargo. The equipment must be designed to function in the operating environment at the point of oil transfer. These resources must include—

3.1.1 Containment boom in a quantity equal to twice the length of the largest vessel involved in the transfer capable of being deployed within 1 hour of the detection of a spill at the site of oil transfer operations. If the transfer operation is more than 12 miles from shore, the containment boom must be deployed within 1 hour plus the travel time from the nearest shoreline at a speed of 5 knots.

3.1.2 Oil recovery devices with an effective daily recovery capacity of 50 barrels or greater available at the transfer site within 2 hours of the detection of an oil discharge.

3.1.3 Oil storage capacity for recovered oily material indicated in section 9.2 of this appendix.

*4. Determining Response Resources Required for the Maximum Most Probable Discharge*

4.1 A vessel owner or operator shall identify and ensure, by contract or other approved means, that sufficient response resources are available to respond to discharges up to the maximum most probable discharge volume for that vessel. The resources should be capable of containing and collecting up to 2,500 barrels of oil. All equipment identified must be designed to operate in the applicable operating environment specified in table 1 of this appendix.

4.2 To determine the maximum most probable discharge volume to be used for planning, use the lesser of—

4.2.1 2500 barrels; or

4.2.2 10 percent of the total oil cargo capacity.

4.3 Oil recovery devices necessary to meet the applicable maximum most probable discharge volume planning criteria must be located such that they arrive on scene within 12 hours of the discovery of a discharge in higher volume port areas and the Great Lakes, 24 hours in all other rivers and canals, inland, nearshore, and offshore areas, and 24 hours plus travel time from shore in all open ocean areas.

4.3.1 Because rapid control, containment, and removal of oil is critical to reduce spill impact, the effective daily recovery capacity for oil recovery devices must equal 50% of the planning volume applicable for the vessel as determined in section 4.2 of this appendix. The effective daily recovery capacity for oil recovery devices identified in the plan must be determined using the criteria in section 6 of this appendix.

4.4 In addition to oil recovery capacity, the vessel owner or operator must identify in the response plan and ensure the availability of, through contract or other approved means, sufficient boom available within the required response times for oil connection and containment, and for protection of shoreline areas. While the regulation does not set required quantities of boom for oil collection and containment, the owner or operator of a vessel must still identify in a response plan and ensure, through contract or other approved means, the availability of the boom identified in the plan for this purpose.

4.5 The plan must indicate the availability of temporary storage capacity to meet the requirements of section 9.2 of this appendix. If available storage capacity is insufficient to meet this requirement, the effective daily recovery capacity must be downgraded to the limits of the available storage capacity.

4.6 The following is an example of a maximum most probable discharge volume planning calculation for equipment identification in a higher volume port area:

The vessel's cargo capacity is 10,000 barrels, thus the planning volume is 10 percent or 1,000 barrels. The effective daily recovery capacity must be 50 percent of the planning volume, for 500 barrels per day. The ability of oil recovery devices to meet this capacity will be calculated using the procedures in section 6 of this appendix. Temporary storage capacity available on scene must equal twice the daily recovery capacity as indicated in section 9 of this appendix, or 1000 barrels per day. This figure would represent the information the vessel owner or operator would use to identify and ensure the availability of, through contract or other approved means, the required response resources. The vessel owner would also need to identify how much boom was available for use.

*5. Determining Response Resources Required for the Worst Case Discharge to the Maximum Extent Practicable*

5.1 A vessel owner or operator shall identify and ensure, by contract or other approved means, that sufficient response resources are available to respond to the worst case discharge of oil cargo to the maximum extent practicable. Section 7 of this appendix describes the method to determine the required response resources.

5.2 Oil spill recovery devices identified to meet the applicable worst case discharge

planning volume must be located such that they can arrive at the scene of a discharge within the time specified for the applicable response tier listed in §155.1050(g).

5.3 The effective daily recovery capacity for oil recovery devices identified in a response plan must be determined using the criteria in section 6 of this appendix. A vessel owner or operator shall identify the storage locations of all equipment that must be used to fulfill the requirements for each tier.

5.4 A vessel owner or operator shall identify the availability of temporary storage capacity to meet the requirements of section 9.2 of this appendix. If available storage capacity is insufficient to meet this requirement, then the effective daily recovery capacity must be downgraded to the limits of the available storage capacity.

5.5 When selecting response resources necessary to meet the response plan requirements, the vessel owner or operator must ensure that a portion of those resources are capable of being used in close-to-shore response activities in shallow water. The following percentages of the on-water response equipment identified for the applicable geographic area must be capable of operating in waters of 6 feet or less depth:

(i) Open ocean—none.

(ii) Offshore—10 percent.

(iii) Nearshore, inland, Great Lakes, and rivers and canals—20 percent.

5.6 In addition to oil spill recovery devices and temporary storage capacity, a vessel owner or operator shall identify in the response plan and ensure the availability of, through contract or other approved means, sufficient boom that can arrive on scene within the required response times for oil containment and collection. The specific quantity of boom required for collection and containment will depend on the specific recovery equipment and strategies employed. Table 2 of this appendix lists the minimum quantities of additional boom required for shoreline protection that a vessel owner or operator shall identify in the response plan and ensure the availability of, through contract or other approved means.

5.7 A vessel owner or operator shall also identify in the response plan and ensure, by contract or other approved means, the availability of an oil spill removal organization capable of responding to a shoreline cleanup operation involving the calculated volume of emulsified oil that might impact the affected shoreline. The volume of oil for which a vessel owner or operator should plan should be calculated through the application of factors contained in Tables 3 and 4 of this appendix. The volume calculated from these tables is intended to assist the vessel owner or operator in identifying a contractor with sufficient resources. This planning volume is not used explicitly to determine a required amount of equipment and personnel.

*6. Determining Effective Daily Recovery Capacity for Oil Recovery Devices*

6.1 Oil recovery devices identified by a vessel owner or operator must be identified by manufacturer, model, and effective daily recovery capacity. These capacities must be to meet the applicable planning criteria for the average most probable discharge; maximum most probable discharge; and worst case discharge to the maximum extent practicable.

6.2 For the purposes of determining the effective daily recovery capacity of oil recovery devices, the following method will be used. This method considers potential limitations due to available daylight, weather, sea state, and percentage of emulsified oil in the recovered material. The Coast Guard may assign a lower efficiency factor to equipment listed in a response plan if it determines that such a reduction is warranted.

6.2.1 The following formula must be used to calculate the effective daily recovery capacity:

$R=T\times 24\times E$

R—Effective daily recovery capacity

T—Throughput rate in barrels per hour (nameplate capacity)

E—20% efficiency factor (or lower factor as determined by the Coast Guard)

6.2.2 For those devices in which the pump limits the throughput of liquid, throughput rate will be calculated using the pump capacity.

6.2.3 For belt or mop type devices, the throughput rate will be calculated using data provided by the manufacturer on the nameplate rated capacity for the device.

6.2.4 Vessel owners or operators including in the response plan oil recovery devices whose throughput is not measurable using a pump capacity or belt or mop capacity may provide information to support an alternative method of calculation. This information must be submitted following the procedures in section 6.5 of this appendix.

6.3 As an alternative to section 6.2 of this appendix, a vessel owner or operator may submit adequate evidence that a different effective daily recovery capacity should be applied for a specific oil recovery device. Adequate evidence is actual verified performance data in spill conditions or test using certain ASTM standards [ASTM F 631 (incorporated by reference, see §155.140) Standard Method for Testing Full Scale Advancing Spill Removal Devices], or an equivalent test approved by the Coast Guard.

6.3.1 The following formula must be used to calculate the effective daily recovery capacity under this alternative:

$R=D\times U$

R—Effective daily recovery capacity

D—Average Oil Recovery Rate in barrels per hour (Item 13.2.16 in ASTM F 631; or actual performance data)

U—Hours per day that a vessel owner or operator can document capability to operate equipment under spill conditions. Ten hours per day must be used unless a vessel owner or operator can demonstrate that the recovery operation can be sustained for longer periods.

6.4 A vessel owner or operator submitting a response plan shall provide data that supports the effective daily recovery capacities for the oil recovery devices listed. The following is an example of these calculations:

A weir skimmer identified in a response plan has a manufacturer's rated throughput at the pump of 267 gallons per minute (gpm).

267 gpm=381 barrels per hour
R=381×24×.2=1,829 barrels per day

After testing using ASTM procedures, the skimmer's oil recovery rate is determined to be 220 gpm. The vessel owner or operator identifies sufficient resources available to support operations 12 hours per day.

220 gpm=314 barrels per hour
R=314×12=3,768 barrels per day

A vessel owner or operator will be able to use the higher capacity if sufficient temporary oil storage capacity is available.

6.5 Determinations of alternative efficiency factors under section 6.2 or alternative effective daily recovery capacities under section 6.3 of this appendix will be made by Commandant (CG–5431), Coast Guard Headquarters, 2100 2nd St.,SW., Stop 7581, Washington, DC 20593–7581 or *vrp@uscg.mil*. Oil spill removal organizations or equipment manufacturers may submit required information on behalf of multiple vessel owners or operators.

### *7. Calculating the Worst Case Discharge Planning Volumes*

7.1 A vessel owner or operator shall plan for a response to a vessel's worst case discharge volume of oil cargo. The planning for on-water recovery must take into account a loss of some oil to the environment due to evaporations and natural dissipation, potential increases in volume due to emulsification, and the potential for deposit of some oil on the shoreline.

7.2 The following procedures must be used to calculate the planning volume used by a vessel owner or operator for determining required on-water recovery capacity:

7.2.1 The following must be determined: the total volume of oil cargo carried; the appropriate cargo group for the type of petroleum oil carried [persistent (groups II, III, and IV) or non-persistent (group I)]; and the geographic area(s) in which the vessel operates. For vessels carrying mixed cargoes from different petroleum oil groups, each group must be calculated separately. This information is to be used with Table 3 of this appendix to determine the percentages of the total cargo volume to be used for removal capacity planning. This table divides the cargo volume into three categories: oil lost to the environment; oil deposited on the shoreline; and oil available for on-water recovery.

7.2.2 The on-water oil recovery volume must be adjusted using the appropriate emulsification factor found in Table 4 of this appendix.

7.2.3 The adjusted volume is multiplied by the on-water oil recovery resource mobilization factor found in Table 5 of this appendix from the appropriate operating area and response tier to determine the total on-water oil recovery capacity in barrels per day that must be identified or contracted for to arrive on scene within the applicable time for each response tier. Three tiers are specified. For higher volume port areas, the contracted tiers of resources must be located such that they can arrive on scene within 12, 36, and 60 hours of the discovery of an oil discharge. For the Great Lakes, these tiers are 18, 42, and 66 hours. For rivers and canals, inland, nearshore, and offshore, these tiers are 24, 48, and 72 hours. For the open ocean area, these tiers are 24, 48, and 72 hours with an additional travel time allowance of 1 hour for every additional 5 nautical miles from shore.

7.2.4 The resulting on-water recovery capacity in barrels per day for each tier is used to identify response resources necessary to sustain operations in the applicable geographic area. The equipment must be capable of sustaining operations for the time period specified in Table 3 of this appendix. A vessel owner or operator shall identify and ensure the availability of, through contract or other approved means, sufficient oil spill recovery devices to provide the effective daily oil recovery capacity required. If the required capacity exceeds the applicable cap described in Table 6 of this appendix, then a vessel owner or operator must contract for at least the quantity of resources required to meet the cap, but must identify sources of additional resources as indicated in § 155.1050(p). For a vessel that carries multiple groups of oil, the required effective daily recovery capacity for each group is calculated and summed before applying the cap.

7.3 The following procedures must be used to calculate the planning volume for identifying shoreline cleanup capacity:

7.3.1 The following must be determined: the total volume of oil cargo carried; the appropriate cargo group for the type of petroleum oil carried [persistent (groups II, III, and IV) or non-persistent (group I)]; and the geographic area(s) in which the vessel operates. For a vessel carrying cargoes from different oil groups, each group must be calculated separately. Using this information,

Table 3 of this appendix must be used to determine the percentages of the total cargo volume to be used for shoreline cleanup resource planning.

7.3.2 The shoreline cleanup planning volume must be adjusted to reflect an emulsification factor using the same procedure as described in section 7.2.2 of this appendix.

7.3.3 The resulting volume will be used to identify an oil spill removal organization with the appropriate shoreline cleanup capability.

7.4 The following is an example of the procedure described above:

A vessel with a 100,000 barrel capacity for #6 oil (specific gravity .96) will move from a higher volume port area to another area. The vessel's route will be 70 miles from shore.

Cargo carried: 100,000 bbls. Group IV oil Emulsification factor (from Table 4 of this appendix): 1.4 Areas transited: Inland, Nearshore, Offshore, Open ocean

Planned % on-water recovery (from Table 3 of this appendix):
Inland 50%
Nearshore 50%
Offshore 40%
Open ocean 20%

Planned % oil onshore recovery (from Table 3 of this appendix):
Inland 70%
Nearshore 70%
Offshore 30%
Open ocean 30%

General formula to determine planning volume:
(planning volume)=(capacity)×(% from Table 3 of this appendix)×(emulsification factor from Table 4 of this appendix)

Planning volumes for on-water recovery:
Inland 100,000×.5×1.4=70,000 bbls
Nearshore 100,000×.5×1.4=70,000 bbls
Offshore 100,000×.4×1.4=56,000 bbls
Open ocean 100,000×.2×1.4=28,000 bbls

Planning volumes for on shore recovery:
Inland 100,000×.7×1.4=98,000 bbls
Nearshore 100,000×.7×1.4=98,000 bbls
Offshore 100,000×.3×1.4=42,000 bbls
The vessel owner or operator must contract with a response resource capable of managing a 98,000-barrel shoreline cleanup in those areas where the vessel comes closer than 50 miles to shore.

Determining required resources for on-water recovery for each tier using mobilization factors: (barrel per day on-water recovery requirements)=(on-water planning volume as calculated above)×(mobilization factor from Table 5 of this appendix).

| | | Tier 1 | Tier 2 | Tier 3 |
|---|---|---|---|---|
| Inland/Nearshore 70,000 | × | .15 | .25 | .40 |
| Offshore 56,000 | × | .10 | .165 | .21 |
| Open ocean 28,000 | × | .06 | .10 | .12 |
| equals (barrels per day) | | | | |
| Inland/Nearshore | | 10,500 | 17,500 | 28,000 |
| Offshore | | 5,600 | 9,240 | 11,760 |
| Open ocean | | 1,680 | 2,800 | 3,360 |

Since the requirements for Tier 1 for inland and nearshore exceed the caps, the vessel owner would only need to contract for 10,000 barrels per day for Tier 1. No additional equipment would be required to be identified because the required Tier 3 resources are below the Tier 3 caps.

10% of the on-water recovery capability for offshore, and 20% of the capability for inland/nearshore, for all tiers, must be capable of operating in water with a depth of 6 feet or less.

The vessel owner or operator would also be required to identify or contract for quantities of boom identified in Table 2 of this appendix for the areas in which the vessel operates.

*8. Determining the Capability of High-Rate Response Methods*

8.1 Calculate cumulative dispersant application capacity requirements as follows:

8.1.1 A vessel owner or operator must plan either for a dispersant capacity to respond to a vessel's worst case discharge (WCD) of oil, or for the amount of the dispersant resource capability as required by §155.1050(k)(3) of this chapter, whichever is the lesser amount. When planning for the cumulative application capacity that is required, the calculations should account for the loss of some oil to the environment due to natural dissipation causes (primarily evaporation). The following procedure should be used to determine the cumulative application requirements:

8.1.2 Determine the WCD volume of oil carried in gallons, and the appropriate oil group for the type of petroleum oil carried (Groups II, III, IV). For vessels carrying different oil groups, assume a WCD using the oil group that constitutes the largest portion of the oil being carried, or the oil group with the smallest natural dissipation factor;

8.1.3 Multiply the WCD in gallons by the natural dissipation factor for the appropriate oil group as follows: Group II factor is 0.50; Group III factor is 0.30; and Group IV factor is 0.10. This represents the amount of oil that

can be expected to be lost to natural dissipation. Subtract the WCD lost to natural dissipation from the total oil amount carried to determine the remaining oil available for treatment by dispersant-application; and

8.1.4 Multiply the oil available for dispersant treatment by the dispersant to oil planning application ratio of 1 part dispersant to 20 parts oil (0.05). The resulting number represents the cumulative total dispersant-application capability that must be ensured available within the first 60 hours.

8.1.5(i) The following is an example of the procedure described in paragraphs 8.1.1 through 8.1.4 above: A vessel with a 1,000,000 gallons capacity of crude oil (specific gravity 0.87) will transit through an area with pre-authorization for dispersant use in the near-shore environment on the U.S. East Coast.

WCD: 1,000,000 gallons, Group III oil.

Natural Dissipation Factor for Group III: 30 percent.

General formula to determine oil available for dispersant treatment: ((WCD)—[(WCD) × (natural dissipation factor)] = available oil.

E.g., 1,000,000 gal − (1,000,000 gal × 0.30) = 700,000 gallons of available oil.

Cumulative application capacity = Available oil × planning application ratio (1 gal dispersant/20 gals oil = 0.05).

E.g., 700,000 gal oil × (0.05) = 35,000 gallons cumulative dispersant-application capacity.

(ii) The requirements for cumulative dispersant-application capacity (35,000) for this vessel's WCD is less than the overall dispersant capability cap for non-Gulf Coast waters required by §155.1050(k) of this chapter. Because paragraph 8.1.1 of this appendix requires owners and operators to ensure the availability of the lesser of a vessel's dispersant requirements for WCD or the amount of the dispersant cap provided for in §155.1050(k)(3), the vessel in this example would be required to ensure the availability of 35,000 gallons of dispersant. More specifically, this vessel would be required to meet the following tier requirements in §155.1050(k), which total 35,000 gallons application:

Tier—1 4,125 gallons—Completed in 12 hours.

Tier—2 23,375 gallons—Completed in 36 hours.

Tier—3 7,500 gallons—Completed in 60 hours.

8.2 Determining Effective Daily Application Capacities ''EDACs'' for dispersant response systems as follows:

8.2.1 EDAC planning estimates for compliance with the dispersant application requirements in §155.1050(k)(3) are to be based on:

8.2.1.1 The spill occurring at sites 50 nautical miles off shore furthest from the primary dispersant staging site(s);

8.2.1.2 Specific dispersant application platform operational characteristics identified in the Dispersant Mission Planner 2 or as demonstrated by operational tests;

8.2.1.3 Locations of primary dispersant staging sites; and

8.2.1.4 Locations and quantities of dispersant stockpiles.

8.2.2 EDAC calculations with supporting documentation must be submitted to the NSFCC for classification as a Dispersant Oil Spill Removal Organization.

8.2.3(i) EDAC can also be calculated using the Dispersant Mission Planner 2 (DMP2). The DMP2 is a downloadable application that calculates EDAC for different dispersant response systems. It is located on the Internet at: *http://www.response.restoration.noaa.gov/spilltools*

(ii) The DMP2 contains operating information for the vast majority of dispersant application platforms, to include aircraft, both rotary and fixed wing, and vessels. The DMP2 produces EDAC estimates by performing calculations that are based on performance parameters of dispersant application platforms, locations of primary dispersant staging sites, home based airport or port locations, and for planning purposes, a 50 mile from shore dispersant application site. The 50 mile offshore site used in the DMP2 would be the location furthest from the primary dispersant staging site identified in the vessel response plan.

8.2.4 For each Captain of the Port Zone where a dispersant response capability is required, the response plan must identify the following:

8.2.4.1 The type, number, and location of each dispersant application platform intended for use in meeting dispersant delivery requirements specified in §155.1050(k)(3) of this chapter;

8.2.4.2 The amount and location of available dispersant stockpiles to support each platform; and

8.2.4.3 A primary staging site for each platform that will serve as its base of operations for the duration of the response.

8.3 In addition to the equipment and supplies required, a vessel owner or operator must identify a source of support to conduct the monitoring and post-use effectiveness evaluation required by applicable Local and Area Contingency Plans.

8.4 Identification of the resources for dispersant application does not imply that the use of this technique will be authorized. Actual authorization for use during a spill response will be governed by the provisions of the National Oil and Hazardous Substances Contingency Plan (40 CFR part 300) and the applicable Local or Area Contingency Plan.

*9. Additional Equipment Necessary To Sustain Response Operations*

9.1 A vessel owner or operator is responsible for ensuring that sufficient numbers of

trained personnel, boats, aerial spotting aircraft, sorbent materials, boom anchoring materials, and other resources are available to sustain response operations to completion. All such equipment must be suitable for use with the primary equipment identified in the response plan. A vessel owner or operator is not required to list these resources in the response plan, but shall certify their availability.

9.2 A vessel owner or operator shall evaluate the availability of adequate temporary storage capacity to sustain the effective daily recovery capacities from equipment identified in the plan. Because of the inefficiencies of oil spill recovery devices, response plans must identify daily storage capacity equivalent to twice the effective daily recovery capacity required on scene. This temporary storage capacity may be reduced if a vessel owner or operator can demonstrate by waste stream analysis that the efficiencies of the oil recovery devices, ability to decant water, or the availability of alternative temporary storage or disposal locations in the area(s) the vessel will operate will reduce the overall volume of oily material storage requirements.

9.3 A vessel owner or operator shall ensure that their planning includes the capability to arrange for disposal of recovered oil products. Specific disposal procedures will be addressed in the applicable Area Contingency Plan.

TABLE 1—RESPONSE RESOURCE OPERATING CRITERIA

[Oil Recovery Devices]

| Operating Environment | Significant Wave Height [1] (feet) | Sea State |
|---|---|---|
| Rivers & Canals | ≤1 | 1 |
| Inland | ≤3 | 2 |
| Great Lakes | ≤4 | 2–3 |
| Ocean | ≤6 | 3–4 |

[Boom]

| Boom Property | Use | | | |
|---|---|---|---|---|
| | Rivers & Canals | Inland | Great Lakes | Ocean |
| Significant Wave [1,2] Height (feet) | ≤1 | ≤3 | ≤4 | ≤6 |
| Sea State | 1 | 2 | 2–3 | 3–4 |
| Boom height—in. (draft plus freeboard) | 6–18 | 18–42 | 18–42 | ≥42 |
| Reserve Buoyancy to Weight Ratio | 2:1 | 2:1 | 2:1 | 3:1 to 4:1 |
| Total Tensile Strength—lbs. | 4,500 | 15–20,000 | 15–20,000 | >20,000 |
| Skirt Fabric Tensile Strength—lbs. | 200 | 300 | 300 | 500 |
| Skirt Fabric Tear Strength—lbs. | 100 | 100 | 100 | 125 |

[1] Oil recovery devices and boom must be at least capable of operating in wave heights up to and including the values listed in Table 1 for each operating environment.

[2] Equipment identified as capable of operating in waters of 6 feet or less depth are exempt from the significant wave height planning requirement.

TABLE 2—SHORELINE PROTECTION REQUIREMENTS

| Location | Boom | Availability hours | |
|---|---|---|---|
| | Ensured by contract or other approved means (ft.) | Higher volume port area | Other areas |
| **Persistent Oils** | | | |
| Open Ocean | ..... | ..... | ..... |
| Offshore | 15,000 | 24 | 48 |
| Nearshore/Inland/Great Lakes | 30,000 | 12 | 24 |
| Rivers & Canals | 25,000 | 12 | 24 |
| **Non-Persistent Oils** | | | |
| Open Ocean | ..... | ..... | ..... |
| Offshore | ..... | ..... | ..... |
| Nearshore/Inland/Great Lakes | 10,000 | 12 | 24 |
| Rivers & Canals | 15,000 | 12 | 24 |

| Spill Location | Nearshore/Inland/ Great Lakes | | | River | | |
|---|---|---|---|---|---|---|
| Sustainability of on-water oil recovery | 4 days | | | 3 days | | |
| Oil Group | % Natural Dissipation | % Recovered Floating oil | % Oil on shore | % Natural Dissipation | % Recovered Floating oil | % Oil on shore |
| I Non-persistent oils | 80 | 20 | 10 | 80 | 10 | 10 |
| II Light crudes and fuels | 50 | 50 | 30 | 40 | 15 | 45 |
| III Medium crudes and fuels | 30 | 50 | 50 | 20 | 15 | 65 |
| IV Heavy crudes /residual fuels | 10 | 50 | 70 | 5 | 20 | 75 |

Note: Percentage may not sum to 100; reflects enhanced on-water recovery capacity

Table 3 Removal Capacity Planning Table

| Spill Location | Open ocean | | | Offshore | | |
|---|---|---|---|---|---|---|
| Sustainability of on–water oil recovery | 10 days | | | 6 days | | |
| Oil Group | % Natural Dissipation | % Recovered Floating oil | % Oil on shore | % Natural Dissipation | % Recovered Floating oil | % Oil on shore |
| I Non–persistent oils | 100 | / | / | 95 | [5]* | / |
| II Light crudes | 90 | 10 | / | 75 | 25 | 5 |
| III Medium crudes and fuels | 75 | 20 | [5]* | 60 | 40 | 20 |
| IV Heavy crudes /residual fuels | 50 | 20 | [30]* | 50 | 40 | 30 |

* Included in table for continuity; no planning required.

Table 3 Removal Capacity Planning Table

TABLE 4—EMULSIFICATION FACTORS FOR PETROLEUM OIL CARGO GROUPS

| | |
|---|---|
| Non-persistent oil 72 G: | |
| Group I | 1.0 |
| Persistent oil: | |
| Group II | 1.8 |
| Group III | 2.0 |

TABLE 4—EMULSIFICATION FACTORS FOR PETROLEUM OIL CARGO GROUPS—Continued

| | |
|---|---|
| Group IV | 1.4 |

TABLE 5—ON-WATER OIL RECOVERY RESOURCE MOBILIZATION FACTORS

| Area | Tier 1 | Tier 2 | Tier 3 |
|---|---|---|---|
| Rivers and Canals | .30 | .40 | .60 |
| Inland/Nearshore/Great Lakes | .15 | .25 | .40 |
| Offshore | .10 | .165 | .21 |
| Ocean | .06 | .10 | .12 |

Note: These mobilization factors are for total resources mobilized, not incremental resources.

TABLE 6—RESPONSE CAPABILITY CAPS BY GEOGRAPHIC AREA

| | Tier 1 | Tier 2 | Tier 3 |
|---|---|---|---|
| *As of February 18, 1993:* | | | |
| All except rivers & canals & Great Lakes | 10K bbls/day | 20K bbls/day | 40K bbls/day. |
| Great Lakes | 5K bbls/day | 10K bbls/day | 20K bbls/day. |
| Rivers & canals | 1,500 bbls/day | 3,000 bbls/day | 6,000 bbls/day. |
| *February 18, 1998:* | | | |
| All except rivers & canals & Great Lakes | 12.5K bbls/day | 25K bbls/day | 50K bbls/day. |
| Great Lakes | 6.35K bbls/day | 12.5K bbls/day | 25K bbls/day. |
| Rivers & canals | 1,875 bbls/day | 3,750 bbls/day | 7,500 bbls/day. |
| *February 18, 2003* | | | |
| All except rivers & canals & Great Lakes | 12.5K bbls/day | 25K bbls/day | 50K bbls/day. |
| Great Lakes | 6.25K bbls/day | 12.3K bbls/day | 25K bbls/day. |
| Rivers & canals | 1,875 bbls/day | 3,750 bbls/day | 7,500 bbls/day. |

Note: The caps show cumulative overall effective daily recovery capacity, not incremental increases.
K = Thousand
bbls = Barrels
TBD = To be determined

[CGD 91–034, 61 FR 1100, Jan. 12, 1996, as amended by CGD 96–026, 61 FR 33666, June 28, 1996; USCG–1999–5151, 64 FR 67176, Dec. 1, 1999; USCG–2005–21531, 70 FR 36349, June 23, 2005; USCG–2008–0179, 73 FR 35015, June 19, 2008; USCG–2001–8661, 74 FR 45029, Aug. 31, 2009; USCG–2010–0351, 75 FR 36285, June 25, 2010]

## APPENDIX C TO PART 155—TRAINING ELEMENTS FOR OIL SPILL RESPONSE PLANS

### *1. General*

1.1 The portion of the plan dealing with training is one of the key elements of a response plan. This concept is clearly expressed by the fact that Congress, in writing the Oil Pollution Act of 1990, specifically included training as one of the sections required in a vessel or facility response plan. In reviewing submitted response plans, it has been noted that the plans often do not provide sufficient information in the training section of the plan for either the user or the reviewer of the plan. In some cases, plans simply state that the crew and others will be training in their duties and responsibilities, with no other information being provided. In other plans, information is simply given that required parties will receive the necessary worker safety training (HAZWOPER).

1.2 The training section of the plan need not be a detailed course syllabus, but it must contain sufficient information to allow the user and reviewer (or evaluator) to have an understanding of those areas that are believed to be critical. Plans should identify key skill areas and the training that is required to ensure that the individual identified will be capable of performing the duties prescribed to them. It should also describe how the training will be delivered to the various personnel. Further, this section of the plan must work in harmony with those sections of the plan dealing with exercises, the spill management team, and the qualified individual.

1.3 The material in this appendix C is not all-inclusive and is provided for guidance only.

### *2. Elements To Be Addressed*

2.1 To assist in the preparation of the training section of a vessel response plan, some of the key elements that should be addressed are indicated in the following sections. Again, while it is not necessary that the comprehensive training program for the company be included in the response plan, it

is necessary for the plan to convey the elements that define the program as appropriate.

2.2 An effective spill response training program should consider and address the following:

2.2.1 Notification requirements and procedures.

2.2.2 Communication system(s) used for the notifications.

2.2.3 Procedures to mitigate or prevent any discharge or a substantial threat of a discharge of oil resulting from—

2.2.3.1 Operational activities associated with internal or external cargo transfers;

2.2.3.2 Grounding or stranding;

2.2.3.3 Collision;

2.2.3.4 Explosion or fire;

2.2.3.5 Hull failure;

2.2.3.6 Excessive list; or

2.2.3.7 Equipment failure.

2.2.4 Procedures and arrangements for emergency towing.

2.2.5 When performing shipboard mitigation measures—

2.2.5.1 Ship salvage procedures;

2.2.5.2 Damage stability; and

2.2.5.3 Hull stress considerations.

2.2.6 Procedures for transferring responsibility for direction of response activities from vessel and facility personnel to the spill management team.

2.2.7 Familiarity with the operational capabilities of the contracted oil spill removal organizations and the procedures to notify and activate such organizations.

2.2.8 Familiarity with the contracting and ordering procedures to acquire oil spill removal organization resources.

2.2.9 Familiarity with the Area Contingency Plans.

2.2.10 Familiarity with the organizational structures that will be used to manage the response actions.

2.2.11 Responsibilities and duties of the spill management team members in accordance with designated job responsibilities.

2.2.12 Responsibilities and authority of the qualified individual as described in the vessel response plan and company response organization.

2.2.13 Responsibilities of designated individuals to initiate a response and supervise shore-based response resources.

2.2.14 Actions to take, in accordance with designated job responsibilities, in the event of a transfer system leak, tank overflow, or suspected cargo tank or hull leak.

2.2.15 Information on the cargoes handled by the vessel or facility, including familiarity with—

2.2.15.1 Cargo material safety data sheets;

2.2.15.2 Chemical characteristics of the cargo;

2.2.15.3 Special handling procedures for the cargo;

2.2.15.4 Health and safety hazards associated with the cargo; and

2.2.15.5 Spill and firefighting procedures for the cargo.

2.2.16 Occupational Safety and Health Administration requirements for worker health and safety (29 CFR 1910.120).

*3. Further Considerations*

In drafting the training section of the response plan, some further considerations are noted below (these points are raised simply as a reminder):

3.1 The training program should focus on training provided to vessel personnel.

3.2 An organization is comprised of individuals, and a training program should be structured to recognize this fact by ensuring that training is tailored to the needs of the individuals involved in the program.

3.3 An owner or operator may identify equivalent work experience which fulfills specific training requirements.

3.4 The training program should include participation in periodic announced and unannounced exercises. This participation should approximate the actual roles and responsibilities of individuals as specified in the response plan.

3.5 Training should be conducted periodically to reinforce the required knowledge and to ensure an adequate degree of preparedness by individuals with responsibilities under the vessel response plan.

3.6 Training may be delivered via a number of different means; including classroom sessions, group discussions, video tapes, self study workbooks, resident training courses, on-the-job training, or other means as deemed appropriate to ensure proper instruction.

3.7 New employees should complete the training program prior to being assigned job responsibilities which require participation in emergency response situations.

*4. Conclusion*

The information in this appendix is only intended to assist response plan preparers in reviewing the content of and in modifying the training section of their response plans. It may be more comprehensive than is needed for some vessels and not comprehensive enough for others. The Coast Guard expects that plan preparers have determined the training needs of their organizations created by the development of the response plans and the actions identified as necessary to increase the preparedness of the company and its personnel to respond to actual or threatened discharges of oil from their vessels.

[CGD 91–034, 61 FR 1107, Jan. 12, 1996]

# PART 156—OIL AND HAZARDOUS MATERIAL TRANSFER OPERATIONS

## Subpart A—Oil and Hazardous Material Transfer Operations

Sec.
156.100 Applicability.
156.105 Definitions.
156.107 Alternatives.
156.110 Exemptions.
156.111 Incorporation by reference.
156.112 Suspension order.
156.113 Compliance with suspension order.
156.115 Person in charge: Limitations.
156.118 Advance notice of transfer.
156.120 Requirements for transfer.
156.125 Discharge cleanup.
156.130 Connection.
156.150 Declaration of inspection.
156.160 Supervision by person in charge.
156.170 Equipment tests and inspections.

## Subpart B—Special Requirements for Lightering of Oil and Hazardous Material Cargoes

156.200 Applicability.
156.205 Definitions.
156.210 General.
156.215 Pre-arrival notices.
156.220 Reporting of incidents.
156.225 Designation of lightering zones.
156.230 Factors considered in designating lightering zones.

## Subpart C—Lightering Zones and Operational Requirements for the Gulf of Mexico

156.300 Designated lightering zones.
156.310 Prohibited areas.
156.320 Maximum operating conditions.
156.330 Operations.

AUTHORITY: 33 U.S.C. 1231, 1321(j); 46 U.S.C. 3703a, 3715; E.O. 11735, 3 CFR 1971–1975 Comp., p. 793. Section 156.120(bb) is also issued under 46 U.S.C. 3703.

## Subpart A—Oil and Hazardous Material Transfer Operations

### § 156.100 Applicability.

This subpart applies to the transfer of oil or hazardous material on the navigable waters or contiguous zone of the United States to, from, or within each vessel with a capacity of 250 barrels or more; except that, this subpart does not apply to transfer operations within a public vessel.

[CGD 86–034, 55 FR 36255, Sept. 4, 1990]

### § 156.105 Definitions.

Except as specifically stated in a section, the definitions in § 154.105 of this chapter apply to this subpart.

[CGD 90–071a, 59 FR 53291, Oct. 21, 1994]

### § 156.107 Alternatives.

(a) The COTP may consider and approve alternative procedures, methods, or equipment standards to be used by a vessel or facility operator in lieu of any requirements in this part if:

(1) Compliance with the requirement is economically or physically impractical;

(2) The vessel or facility operator submits a written request for the alternative at least 30 days before operations under the alternative are proposed, unless the COTP authorizes a shorter time; and

(3) The alternative provides an equivalent level of safety and protection from pollution by oil or hazardous material, which is documented in the request.

(b) The COTP takes final approval or disapproval action on any alternative requested, in writing, within 30 days of receipt of the request.

[CGD 75–124, 45 FR 7177, Jan. 31, 1980, as amended by CGD 86–034, 55 FR 36255, Sept. 4, 1990]

### § 156.110 Exemptions.

(a) The Assistant Commandant for Marine Safety, Security and Environmental Protection, acting for the Commandant, may grant an exemption or partial exemption from compliance with any requirement in this part, and the District Commander may grant an exemption or partial exemption from compliance with any operating condition or requirement in subpart C of this part, if:

(1) The vessel or facility operator submits an application for exemption via the COTP at least 30 days before operations under the exemption are proposed, unless the COTP authorizes a shorter time; and

(2) It is determined, from the application, that:

(i) Compliance with a specific requirement is economically or physically impractical;

(ii) No alternative procedures, methods, or equipment standards exist that would provide an equivalent level of safety and protection from pollution by oil or hazardous material; and

(iii) The likelihood of oil or hazardous material being discharged as a result of the exemption is minimal.

(b) If requested, the applicant must submit any appropriate information, including an environmental and economic assessment of the effects of and reasons for the exemption and proposed procedures, methods or equipment standards.

(c) The exemption may specify the procedures, methods, or equipment standards that will apply.

(d) An exemption is granted or denied in writing. The decision of the Assistant Commandant for Marine Safety, Security and Environmental Protection is a final agency action.

[CGD 75–124, 45 FR 7177, Jan. 31, 1980, as amended by CGD 88–052, 53 FR 25122, July 1, 1988; CGD 86–034, 55 FR 36255, Sept. 4, 1990; CGD 93–081, 60 FR 45017, Aug. 29, 1995; CGD 96–026, 61 FR 33666, June 28, 1996; CGD 93–056, 61 FR 41461, Aug. 8, 1996; CGD0 97–023, 62 FR 33364, June 19, 1997; USCG–2002–12471, 67 FR 41333, June 18, 2002]

### § 156.111 Incorporation by reference.

(a) Certain material is incorporated by reference into this part with the approval of the Director of the Federal Register under 5 U.S.C. 552(a) and 1 CFR part 51. To enforce any edition other than that specified in paragraph (b) of this section, the Coast Guard must publish notice of the change in the FEDERAL REGISTER; and the material must be available to the public. All approved material is available for inspection at the U.S. Coast Guard, Office of Compliance (CG–543), 2100 2nd St. SW., Stop 7581, Washington, DC 20593–7581 and at the National Archives and Records Administration (NARA). For information on the availability of this material at NARA, call 202–741–6030, or go to: *http://www.archives.gov/federal_register/code_of_federal_regulations/ibr_locations.html*. All approved material is available from the sources indicated in paragraph (b) of this section.

(b) The material approved for incorporation by reference in this part and the sections affected are as follows:

*Oil Companies International Marine Forum (OCIMF)*

15th Floor, 96 Victoria Street, London SW1E 5JW, England.

Ship to Ship Transfer Guide (Petroleum), Second Edition, 1988—156.330.

*International Chamber of Shipping*

12 Carthusian Street, London EC1M 6EB, England.

Guide to Helicopter/Ship Operations, Third Edition, 1989—156.330.

[CGD 93–081, 60 FR 45017, Aug. 29, 1995, as amended by CGD 96–026, 61 FR 33666, June 28, 1996; 69 FR 18803, Apr. 9, 2004; USCG–2008–0179, 73 FR 35015, June 19, 2008; USCG–2010–0351, 75 FR 36285, June 25, 2010]

### § 156.112 Suspension order.

The COTP or OCMI may issue a suspension order to suspend transfer operations to the vessel or facility operator when the COTP or OCMI finds there is a condition requiring action to prevent the discharge or threat of discharge of oil or hazardous material, or when the COTP or OCMI is unable to verify compliance with the regulations through an inspection. A suspension order:

(a) May be effective immediately;

(b) Is issued in writing unless it is effective immediately and then it may be issued orally and followed up in writing;

(c) Includes a statement of each condition requiring correction to—

(1) Prevent the discharge of oil or hazardous material; or

(2) Comply with § 154.735 of this chapter; and

(d) Is withdrawn when the COTP, OCMI, or District Commander, as applicable, determines that the condition requiring action to prevent the discharge or threat of discharge of oil or hazardous material has been corrected or no longer exists.

[CGD 75–124, 45 FR 7177, Jan. 31, 1980, as amended by CGD 86–034, 55 FR 36255, Sept. 4, 1990]

### § 156.113 Compliance with suspension order.

(a) No vessel or facility operator to whom a suspension order has been issued may conduct transfer operations from the time the order is effective until that order is withdrawn by the applicable COTP, OCMI, or by the District Commander.

(b) The vessel or facility operator may request reconsideration of the suspension order either orally or in writing to the COTP or OCMI who issued it. The request may contain supporting documentation and evidence that the vessel or facility operator wishes to have considered.

(c) Any person not satisfied with a ruling made under the procedure contained in paragraph (b) of this section may appeal that ruling in writing, except as allowed under paragraph (e) of this section, to the Coast Guard District Commander of the district in which the suspension order was issued. The appeal may contain supporting documentation and evidence that the appellant wishes to have considered. The appeal does not stay the effect of the suspension order while the COTP or OCMI ruling is being reviewed. The District Commander issues a ruling after reviewing the appeal.

(d) The ruling by the District Commander is final agency action.

(e) If the delay in presenting a written appeal under paragraph (c) of this section would have a significant adverse impact on the appellant, the appeal may initially be presented orally. If an initial presentation of the appeal is made orally, the appellant must submit the appeal in writing within five days of the oral presentation to the District Commander to whom the oral appeal was made, containing, at a minimum the basis for the appeal and a summary of the material presented orally.

[CGD 75–124, 45 FR 7177, Jan. 31, 1980, as amended by CGD 86–034, 55 FR 36255, Sept. 4, 1990]

### § 156.115 Person in charge: Limitations.

(a) No person may serve as the person in charge of transfer operations on more than one vessel at a time during transfers between vessels or between two or more vessels and a facility unless authorized by the COTP.

(b) No person may serve as the person in charge of both a vessel and a facility during transfer operations unless authorized by the COTP.

[CGD 75–124, 45 FR 7177, Jan. 31, 1980, as amended by CGD 86–034, 55 FR 36255, Sept. 4, 1990]

### § 156.118 Advance notice of transfer.

(a) The COTP may require a facility operator to notify the COTP of the time and place of each transfer operation at least 4 hours before it begins for facilities that:

(1) Are mobile;

(2) Are in a remote location;

(3) Have a prior history of oil or hazardous material spills; or

(4) Conduct infrequent transfer operations.

(b) In the case of a vessel to vessel transfer, the COTP may require a vessel operator of a lightering or fueling vessel to notify the COTP of the time and place of each transfer operation, as specified by the COTP, at least 4 hours before it begins.

(c) No person may conduct such transfer operations until advance notice has been given as specified by the COTP.

NOTE: The notification may be accomplished by submitting a written schedule, periodically updated to be current.

[CGD 75–124, 45 FR 7177, Jan. 31, 1980, as amended by CGD 86–034, 55 FR 36255, Sept. 4, 1990]

### § 156.120 Requirements for transfer.

A transfer is considered to begin when the person in charge on the transferring vessel or facility and the person in charge on the receiving facility or vessel first meet to begin completing the declaration of inspection, as required by § 156.150 of this part. No person shall conduct an oil or hazardous material transfer operation unless:

(a) The vessel's moorings are strong enough to hold during all expected conditions of surge, current, and weather and are long enough to allow adjustment for changes in draft, drift, and tide during the transfer operation;

(b) Transfer hoses and loading arms are long enough to allow the vessel to

move to the limits of its moorings without placing strain on the hose, loading arm, or transfer piping system;

(c) Each hose is supported to prevent kinking or other damage to the hose and strain on its coupling.

(d) Each part of the transfer system is aligned to allow the flow of oil or hazardous material;

(e) Each part of the transfer system not necessary for the transfer operation is securely blanked or shut off;

(f) The end of each hose and loading arm that is not connected for the transfer of oil or hazardous material is blanked off using the closure devices required by §§ 154.520 and 155.805 of this chapter;

(g) The transfer system is attached to a fixed connection on the vessel and the facility except that when a vessel is receiving fuel, an automatic back pressure shutoff nozzle may be used;

(h) Each overboard discharge or sea suction valve that is connected to the vessel's transfer or cargo tank system is sealed or lashed in the closed position; except when used to receive or discharge ballast in compliance with 33 CFR part 157;

(i) Each transfer hose has no unrepaired loose covers, kinks, bulges, soft spots, or any other defect which would permit the discharge of oil or hazardous material through the hose material and no gouges, cuts, or slashes that penetrate the first layer of hose reinforcement (''reinforcement'' means the strength members of the hose, consisting of fabric, cord and/or metal);

(j) Each hose or loading arm in use meets §§ 154.500 and 154.510 of this chapter, respectively;

(k) Each connection meets § 156.130;

(l) Any monitoring devices required by § 154.525 of this chapter are installed and operating properly;

(m) The discharge containment equipment required by § 154.545 of this chapter is readily accessible or deployed as applicable;

(n) The discharge containment required by §§ 154.530, 155.310, and 155.320 of this chapter, as applicable, is in place and periodically drained to provide the required capacity;

(o) Each drain and scupper is closed by the mechanical means required by § 155.310;

(p) All connections in the transfer system are leak free except that a component in the transfer system, such as the packing glands of a pump, may leak at a rate that does not exceed the capacity of the discharge containment provided during the transfer operation;

(q) The communications required by §§ 154.560 and 155.785 of this chapter are operable for the transfer operation;

(r) The emergency means of shutdown required by §§ 154.550 and 155.780 of this chapter, as applicable, is in position and operable;

(s) There is a person in charge on the transferring vessel or facility and the receiving vessel or facility except as otherwise authorized under § 156.115;

(t) Each person in charge required by paragraph (s) of this section:

(1) Is at the site of the transfer operation and immediately available to the transfer personnel;

(2) Has in his or her possession a copy of the facility operations manual or vessel transfer procedures, as appropriate; and

(3) Conducts the transfer operation in accordance with the facility operations manual or vessel transfer procedures, as appropriate;

(u) The personnel required, under the facility operations manual and the vessel transfer procedures, to conduct the transfer operation:

(1) Are on duty; and

(2) Conduct the transfer operation in accordance with the facility operations manual or vessel transfer procedures, as appropriate;

(v) At least one person is at the site of the transfer operation who fluently speaks the language or languages spoken by both persons in charge;

(w) The person in charge of the transfer on the transferring vessel or facility and the person in charge of it on the receiving vessel or facility have held a conference, to ensure that each person in charge understands—

(1) The identity of the product to be transferred;

(2) The sequence of transfer operations;

(3) The transfer rate;

(4) The name or title and location of each person participating in the transfer operation;

(5) Details of the transferring and receiving systems including procedures to ensure that the transfer pressure does not exceed the maximum allowable working pressure (MAWP) for each hose assembly, loading arm and/or transfer pipe system;

(6) Critical stages of the transfer operation;

(7) Federal, state, and local rules that apply to the transfer of oil or hazardous material;

(8) Emergency procedures;

(9) Discharge containment procedures;

(10) Discharge reporting procedures;

(11) Watch or shift arrangement;

(12) Transfer shutdown procedures; and,

(13) If the persons use radios, a predetermined frequency for communications during the transfer, agreed upon by both.

(x) The person in charge of transfer operations on the transferring vessel or facility and the person in charge of transfer operations on the receiving vessel or facility agree to begin the transfer operation;

(y) Between sunset and sunrise the lighting required by §§154.570 and 155.790 of this chapter is provided; and

(z) For transfer operations between tank barges from sunset to sunrise, lighting is provided as described in §155.790 of this chapter.

(aa) A transfer operation which includes collection of vapor emitted from a vessel's cargo tanks through a venting system not located on the vessel must have the following verified by the person in charge:

(1) Each manual valve in the vapor collection system is correctly positioned to allow the collection of cargo vapor;

(2) A vapor collection hose or arm is connected to the vessel's vapor connection;

(3) The electrical insulating device required by §154.810(g) of this chapter or 46 CFR 39.40–3(c) is fitted between the facility vapor connection and the vessel vapor connection;

(4) The initial loading rate and the maximum transfer rate are determined;

(5) The maximum and minimum operating pressures at the facility vapor connection are determined;

(6) The tank barge overfill control system, if installed, is connected to the facility, tested, and operating properly;

(7) The following have been performed not more than 24 hours prior to the start of the transfer operation:

(i) Each alarm and automatic shutdown system required by subpart E of part 154 of this chapter and 46 CFR part 39 has been tested and found to be operating properly, and

(ii) Analyzers required by §154.820(a), §154.824 (d) and (e) of this chapter or 46 CFR 39.40–3(a) have been checked for calibration by use of a span gas;

(8) Each vapor recovery hose has no unrepaired loose covers, kinks, bulges, soft spots, or any other defect which would permit the discharge of vapor through the hose material, and no external gouges, cuts, or slashes that penetrate the first layer of hose reinforcement; and

(9) The oxygen content of the vessel's cargo tanks, if inerted, is at or below 8 percent by volume.

(bb) If the transfer operation involves loading oil, as defined in §151.05 of this chapter, into a cargo tank, the overfill device required by §155.480 of this chapter is installed and operating properly.

(cc) Smoking is not permitted in the facilities marine transfer area except in designated smoking areas.

(dd) Welding, hot work operations and smoking are prohibited on vessels during the transfer of flammable or combustible materials, except that smoking may be permitted in accommodation areas designated by the master.

(Approved by the Office of Management and Budget under control number 1625–0039)

[CGD 75–124, 45 FR 7177, Jan. 31, 1980, as amended by CGD 88–102, 55 FR 25445, June 21, 1990; CGD 86–034, 55 FR 36255, Sept. 4, 1990; CGD 90–071a, 59 FR 53291, Oct. 21, 1994; CGD 93–056, 61 FR 41461, Aug. 8, 1996; CGD 79–116, 62 FR 25127, May 8, 1997; USCG–2001–9046, 67 FR 58524, Sept. 17, 2002; USCG–2006–25150, 71 FR 39210, July 12, 2006; 73 FR 79316, Dec. 29, 2008]

### § 156.125 Discharge cleanup.

(a) Each person conducting the transfer operation shall stop the transfer operation whenever oil or hazardous material from any source is discharged:

(1) In the transfer operation work area; or

(2) Into the water or upon the adjoining shoreline in the transfer area.

(b) Except as permitted under paragraph (c) of this section, no person may resume the transfer operation after it has been stopped under paragraph (a) of this section, unless:

(1) Oil or hazardous material discharged in the transfer operation work area is cleaned up; and

(2) Oil or hazardous material discharged into the water or upon the adjoining shoreline is cleaned up, or is contained and being cleaned up.

(c) The COTP may authorize resuming the transfer operation if it is deemed appropriate.

[CGD 75–124, 45 FR 7177, Jan. 31, 1980, as amended by CGD 86–034, 55 FR 36255, Sept. 4, 1990]

### § 156.130 Connection.

(a) Each person who makes a connection for transfer operations shall:

(1) Use suitable material in joints and couplings to ensure a leak-free seal;

(2) Use a bolt in at least every other hole, and in no case less than four bolts, in each temporary bolted connection that uses a flange that meets American National Standards Institute (ANSI) standard flange requirements under § 154.500(d)(2) of this chapter;

(3) Use a bolt in each hole in each temporary bolted connection that uses a flange other than one that meets ANSI standards;

(4) Use a bolt in each hole of each permanently connected flange;

(5) Use bolts of the correct size in each bolted connection; and

(6) Tighten each bolt and nut uniformly to distribute the load and sufficiently to ensure a leak free seal.

(b) A person who makes a connection for transfer operations must not use any bolt that shows signs of strain or is elongated or deteriorated.

(c) Except as provided in paragraph (d) of this section, no person may use a connection for transfer operations unless it is:

(1) A bolted or full threaded connection; or

(2) A quick-connect coupling acceptable to the Commandant.

(d) No person may transfer oil or hazardous material to a vessel that has a fill pipe for which containment cannot practically be provided unless an automatic back pressure shutoff nozzle is used.

[CGD 75–124, 45 FR 7177, Jan. 31, 1980, as amended by CGD 86–034, 55 FR 36256, Sept. 4, 1990]

### § 156.150 Declaration of inspection.

(a) No person may transfer oil or hazardous material to or from a vessel unless each person in charge, designated under §§ 154.710 and 155.700 of this chapter, has filled out and signed the declaration of inspection form described in paragraph (c) of this section.

(b) No person in charge may sign the declaration of inspection unless he or she has determined by inspection, and indicated by initialling in the appropriate space on the declaration of inspection form, that the facility or vessel, as appropriate, meets § 156.120.

(c) The declaration of inspection may be in any form but must contain at least:

(1) The name or other identification of the transferring vessel or facility and the receiving vessel or facility;

(2) The address of the facility or location of the transfer operation if not at a facility;

(3) The date and time the transfer operation is started;

(4) A list of the requirements in § 156.120 with spaces on the form following each requirement for the person in charge of the vessel or facility to indicate by initialling that the requirement is met for the transfer operation; and

(5) A space for the date, time of signing, signature, and title of each person in charge during transfer operations on the transferring vessel or facility and a space for the date, time of signing, signature, and title of each person in charge during transfer operations on the receiving facility or vessel certifying that all tests and inspections have been completed and that they are

both ready to begin transferring product; and

(6) The date and time the transfer operation is completed.

(d) The form for the declaration of inspection may incorporate the declaration-of-inspection requirements under 46 CFR 35.35–30.

(e) The vessel and facility persons in charge shall each have a signed copy of the declaration of inspection available for inspection by the COTP during the transfer operation.

(f) The operators of each vessel and facility engaged in the transfer operation shall retain a signed copy of the declaration of inspection on board the vessel or at the facility for at least 1 month from the date of signature.

[CGD 75–124, 45 FR 7177, Jan. 31, 1980, as amended by CGD 86–034, 55 FR 36256, Sept. 4, 1990; CGD 93–056, 61 FR 41461, Aug. 8, 1996]

### § 156.160 Supervision by person in charge.

(a) No person may connect or disconnect a hose, top off a tank, or engage in any other critical procedures during the transfer operation unless the person in charge, required by § 156.120(s), supervises that procedure.

(b) No person may start the flow of oil or hazardous material to or from a vessel unless instructed to do so by either person in charge.

(c) No person may transfer oil or hazardous material to or from a vessel unless each person in charge is in the immediate vicinity and immediately available to the transfer personnel.

[CGD 75–124, 45 FR 7177, Jan. 31, 1980, as amended by CGD 86–034, 55 FR 36256, Sept. 4, 1990]

### § 156.170 Equipment tests and inspections.

(a) Except as provided in paragraph (d) of this section, no person may use any equipment listed in paragraph (c) of this section for transfer operations unless the vessel or facility operator, as appropriate, tests and inspects the equipment in accordance with paragraphs (b), (c) and (f) of this section and the equipment is in the condition specified in paragraph (c) of this section.

(b) During any test or inspection required by this section, the entire external surface of the hose must be accessible.

(c) For the purpose of paragraph (a) of this section:

(1) Each nonmetallic transfer hose must:

(i) Have no unrepaired loose covers, kinks, bulges, soft spots or any other defect which would permit the discharge of oil or hazardous material through the hose material, and no gouges, cuts or slashes that penetrate the first layer of hose reinforcement as defined in § 156.120(i).

(ii) Have no external deterioration and, to the extent internal inspection is possible with both ends of the hose open, no internal deterioration;

(iii) Not burst, bulge, leak, or abnormally distort under static liquid pressure at least 1½ times the maximum allowable working pressure; and

(iv) Hoses not meeting the requirements of paragraph (c)(1)(i) of this section may be acceptable after a static liquid pressure test is successfully completed in the presence of the COTP. The test medium is not required to be water.

(2) Each transfer system relief valve must open at or below the pressure at which it is set to open;

(3) Each pressure gauge must show pressure within 10 percent of the actual pressure;

(4) Each loading arm and each transfer pipe system, including each metallic hose, must not leak under static liquid pressure at least 1½ times the maximum allowable working pressure; and

(5) Each item of remote operating or indicating equipment, such as a remotely operated valve, tank level alarm, or emergency shutdown device, must perform its intended function.

(d) No person may use any hose in underwater service for transfer operations unless the operator of the vessel or facility has tested and inspected it in accordance with paragraph (c)(1) or (c)(4) of this section, as applicable.

(e) The test fluid used for the testing required by this section is limited to liquids that are compatible with the hose tube as recommended by the hose manufacturer.

(f) The frequency of the tests and inspections required by this section must be:

(1) For facilities, annually or not less than 30 days prior to the first transfer conducted past one year from the date of the last tests and inspections;

(2) For a facility in caretaker status, not less than 30 days prior to the first transfer after the facility is removed from caretaker status; and

(3) For vessels, annually or as part of the biennial and mid-period inspections.

(g) If a facility or vessel collects vapor emitted from a vessel cargo tank with a vapor control system, the system must not be used unless the following tests and inspections are satisfactorily completed:

(1) Each vapor hose, vapor collection arm, pressure or vacuum relief valve, and pressure sensor is tested and inspected in accordance with paragraphs (b), (c), and (f) of this section;

(2) Each remote operating or indicating device is tested for proper operation in accordance with paragraph (f) of this section;

(3) Each detonation arrester required by § 154.820, § 154.826(a), and § 154.828(a) of this chapter or 46 CFR 39.40–3(d), and each flame arrester required by § 154.826(a), § 154.828 (a) and (c) of this chapter has been inspected internally within the last year, or sooner if operational experience has shown that frequent clogging or rapid deterioration is likely; and

(4) Each hydrocarbon and oxygen analyzer required by § 154.820(a) and § 154.824 (d) and (e) of this chapter or 46 CFR 39.40–3(a) is calibrated:

(i) Within the previous two weeks, or

(ii) Within 24 hours prior to operation when the vapor control system is operated less frequently than once a week.

(h) Upon the request of the owner or operator, the COTP may approve alternative methods of compliance to the testing requirements of paragraph (c) of this section if the COTP determines that the alternative methods provide an equal level of protection.

(Approved by the Office of Management and Budget under control number 1625–0095)

[CGD 75–124, 45 FR 7177, Jan. 31, 1980, as amended by CGD 88–102, 55 FR 25445, June 21, 1990; CGD 86–034, 55 FR 36256, Sept. 4, 1990; CGD 93–056, 61 FR 41461, Aug. 8, 1996; USCG–2006–25150, 71 FR 39210, July 12, 2006]

## Subpart B—Special Requirements for Lightering of Oil and Hazardous Material Cargoes

SOURCE: CGD 78–180, 49 FR 11172, Mar. 26, 1984, unless otherwise noted.

### § 156.200 Applicability.

This subpart applies to each vessel to be lightered and each service vessel engaged in a lightering operation in the marine environment beyond the baseline from which the territorial sea is measured when the oil or hazardous material lightered is destined for a port or place subject to the jurisdiction of the U.S. This subpart does not apply to lightering operations involving public vessels, or to the dedicated response vessels and vessels of opportunity in accordance with the National Contingency Plan (40 CFR parts 9 and 300) when conducting response activities. These rules are in addition to the rules of subpart A of this part, as well as the rules in the applicable sections of parts 151, 153, 155, 156, and 157 of this chapter.

[CGD 93–081, 60 FR 45017, Aug. 29, 1995]

### § 156.205 Definitions.

(a) In addition to the terms defined in this section, the definitions in § 154.105 of this chapter apply to this subpart and to subpart C.

(b) As used in this subpart and subpart C:

*Lightering* or *Lightering operation* means the transfer of a cargo of oil or a hazardous material in bulk from one vessel to another, including all phases of the operation from the beginning of the mooring operation to the departure of the service vessel from the vessel to be lightered, except when that cargo is intended only for use as fuel or lubricant aboard the receiving vessel.

*Marine environment* means—

(1) The navigable waters of the United States;

(2) The waters of an area over which the United States asserts exclusive fishery management authority; and

(3) The waters superadjacent to the Outer Continental Shelf of the United States.

*Service vessel* means the vessel which receives a cargo of oil or a hazardous

material from another vessel in a lightering operation.

*Vessel to be lightered* means the vessel which transports a cargo of oil or a hazardous material to a place within the marine environment for transfer of that cargo to another vessel for further transport to a port or place subject to the jurisdiction of the United States. The term ''vessel to be lightered'' does not include drilling rigs, or offshore supply vessels transferring cargo intended for use as fuel or lubricant aboard the receiving vessel.

*Work* includes any administrative duties associated with the vessel whether performed on board the vessel or onshore.

[CGD 78–180, 49 FR 11172, Mar. 26, 1984, as amended by CGD 86–034, 55 FR 36256, Sept. 4, 1990; CGD 90–052, 58 FR 48436, Sept. 15, 1993; CGD 93–081, 60 FR 45017, Aug. 29, 1995]

### § 156.210 General.

(a) No vessel may transfer oil or hazardous materials in a port or place subject to the jurisdiction of the United States, if the cargo has been lightered from another vessel, unless:

(1) The regulations in this subpart have been complied with;

(2) Both the vessel to be lightered and service vessel have, on board, at the time of transfer, a valid Certificate of Inspection, Certificate of Compliance, or a Tank Vessel Examination Letter, as would have been required under 46 U.S.C. 3710 or 3711, had the transfer taken place in a port or place subject to the jurisdiction of the United States;

(3) The delivering and receiving vessels have on board at the time of transfer, evidence that each vessel is operating in compliance with section 311(j) of the Federal Water Pollution Control Act (33 U.S.C. 1321(j)) and applicable regulations issued under the authority of section 311(j) in the form of a Declaration of Inspection as required by § 156.150 and a vessel response plan if required under part 155 of this chapter; and

NOTE: Under 46 U.S.C. 3715, the delivering and receiving vessels must have on board at the time of transfer, a Certificate of Financial Responsibility that would be required if the transfer had taken place in a location subject to the jurisdiction of the U.S. Regulations concerning Certificates of Financial Responsibility for vessels using the navigable waters of the U.S. are in part 130 of this chapter.

(4) The vessel to be lightered has on board, at the time of transfer, an International Oil Pollution Prevention (IOPP) Certificate or equivalent documentation of compliance with Annex I of the International Convention for the Prevention of Pollution from Ships, 1973, as modified by the Protocol of 1978 relating thereto (MARPOL 73/78), as would be required by part 151 of this chapter for vessels in navigable waters of the United States. The IOPP Certificate or documentation of compliance shall be that prescribed by §§ 151.19 and 151.21 of this chapter, and shall be effective under the same timetable as specified in § 151.19.

(b) Lightering operations involving hazardous materials, other than oil, may be conducted only with the specific approval of the Commandant. A request to lighter hazardous materials, other than oil, must be submitted to Commandant (CG–5) prior to the planned beginning of lightering operations. The request must include the information described in § 156.215(a) to the extent known, for the initial transfer, and the estimated frequency of subsequent lightering operations. After the entry into force of Annex II to MARPOL 73/78, vessels lightering hazardous materials shall carry an International Pollution Prevention Certificate for the Carriage of Noxious Liquid Substances in Bulk (1973), if required by Annex II to MARPOL 73/78, or equivalent documentation of compliance with the annex.

(c) In an emergency, the COTP, upon request, may authorize a deviation from any rule in this part if the COTP determines that its application will endanger persons, property, or the environment.

(d) On vessels conducting lightering operations in a designated lightering zone, an officer or seaman may not work, except in an emergency or a drill, more than 15 hours in any 24-hour period, or more than 36 hours in any 72-hour period, including the 24-hour and

72-hour periods prior to commencing lightering operations.

[CGD 78–180, 49 FR 11172, Mar. 29, 1984, as amended by CGD 88–052, 53 FR 25122, July 1, 1988; CGD 90–052, 58 FR 48436, Sept. 15, 1993; CGD 93–081, 60 FR 45017, Aug. 29, 1995; USCG–2002–12471, 67 FR 41333, June 18, 2002; USCG–2006–24371, 74 FR 11212, Mar. 16, 2009; USCG–2010–0351, 75 FR 36285, June 25, 2010]

### § 156.215 Pre-arrival notices.

(a) The master, owner or agent of each vessel to be lightered must give at least 24 hours advance notice to the Captain of the Port nearest the lightering location or zone, prior to arrival in the lightering location or zone. This advance notice must include:

(1) The vessel's name, call sign or official number, and registry:

(2) The cargo type (if oil) or shipping name (if hazardous material) and approximate amount on board;

(3) The number of transfers expected and the amount of cargo expected to be transferred during each transfer;

(4) The lightering location or zone to be used;

(5) The estimated time of arrival in the lightering location or zone;

(6) The estimated duration of transfer operations; and

(7) The name and destination of service vessel(s).

(b) In the event the estimated time of arrival in the lightering location or zone changes by more than six hours, the Master, owner or agent of each vessel to be lightered must advise the Captain of the Port of this change as soon as possible.

(c) Where lightering is conducted as a result of collision, grounding, tank rupture or any similar emergency, immediate notice must be given to the Captain of the Port.

(d) In addition to the other requirements in this section, the master, owner, or agent of a vessel that requires a Tank Vessel Examination (TVE) or other special Coast Guard inspection in order to lighter in a designated lightering zone must request the TVE or other inspection from the cognizant Captain of the Port at least 72 hours prior to commencement of lightering operations.

[CGD 78–180, 49 FR 11172, Mar. 26, 1984, as amended by CGD 90–052, 58 FR 48437, Sept. 15, 1993; CGD 93–081, 60 FR 45017, Aug. 29, 1995]

### § 156.220 Reporting of incidents.

(a) An immediate report must be made to the nearest Captain of the Port, by the service vessel, if fire, explosion, collision, grounding or any similar emergency, which poses a threat to the vessels involved, occurs during lightering.

(b) Any discharge of oil or hazardous material into the water shall be reported, by the service vessel, in accordance with the procedures specified in § 151.15 of this chapter.

### § 156.225 Designation of lightering zones.

The District Commander is delegated the authority to designate lightering zones and their operating requirements, where they are necessary for safety or environmental protection. When a lightering zone has been designated, lightering operations in a given geographic area may only be conducted within the designated lightering zone.

### § 156.230 Factors considered in designating lightering zones.

The following factors are considered in designating a lightering zone:

(a) The findings of the environmental analysis or, if prepared, the Environmental Impact Statement;

(b) The proximity of the zone to:

(1) Shipping lanes;

(2) Vessel traffic schemes or vessel separation systems;

(3) Anchorages;

(4) Fixed structures;

(5) Designated marine sanctuaries;

(6) Commercial and recreational fishing areas;

(7) Environmentally sensitive areas; and

(8) Designated units of the National Park System, National Wild and Scenic Rivers System, National Wilderness Preservation System, properties included on the National Register of Historic Places and National Registry of Natural Landmarks, and National Wildlife Refuge System.

(c) The traditional use of areas for lightering operations;

(d) The normal weather and sea conditions in the areas, and their effect on lightering operations, and the fate of possible cargo discharges;

(e) The depth of water and underwater obstructions that may adversely impact anchorages and clearance of vessels;

(f) Other relevant safety, environmental, or economic data.

## Subpart C—Lightering Zones and Operational Requirements for the Gulf of Mexico

SOURCE: CGD 93–081, 60 FR 45017, Aug. 29, 1995, unless otherwise noted.

### § 156.300 Designated lightering zones.

The following lightering zones are designated in the Gulf of Mexico and are more than 60 miles from the baseline from which the territorial sea is measured:

(a) *Southtex—lightering zone.* This lightering zone and the geographic area for this zone are coterminous and consist of the waters bounded by a line connecting the following points beginning at:

| *Latitude N.* | *Longitude W.* |
|---|---|
| 27°40′00″, | 93°00′00″, thence to |
| 27°40′00″, | 94°35′00″, thence to |
| 28°06′30″, | 94°35′00″, thence to |
| 27°21′00″, | 96°00′00″, thence to |
| 26°30′00″, | 96°00′00″, thence to |
| 26°30′00″, | 93°00′00″, and thence to the point of beginning. |

(NAD 83)

(b) *Gulfmex No. 2—lightering zone.* This lightering zone and the geographic area for this zone are coterminous and consist of the waters bounded by a line connecting the following points beginning at:

| *Latitude N.* | *Longitude W.* |
|---|---|
| 27°53′00″, | 89°00′00″, thence to |
| 27°53′00″, | 91°30′00″, thence to |
| 26°30′00″, | 91°30′00″, thence to |
| 26°30′00″, | 89°00′00″, and thence to the point of beginning. |

(NAD 83)

(c) *Offshore Pascagoula No. 2—lightering zone.* This lightering zone and the geographic area for this zone are coterminous and consist of the waters bounded by a line connecting the following points beginning at:

| *Latitude N.* | *Longitude W.* |
|---|---|
| 29°20′00″, | 87°00′00″, thence to |
| 29°12′00″, | 87°45′00″, thence to |
| 28°39′00″, | 88°00′00″, thence to |
| 28°00′00″, | 88°00′00″, thence to |
| 28°00′00″, | 87°00′00″, and thence to the point of beginning. |

(NAD 83)

(d) *South Sabine Point—lightering zone.* This lightering zone and the geographic area for this zone are coterminous and consist of the waters bounded by a line connecting the following points beginning at:

| *Latitude N.* | *Longitude W.* |
|---|---|
| 28°30′00″, | 92°38′00″, thence to |
| 28°44′00″, | 93°24′00″, thence to |
| 28°33′00″, | 94°00′00″, thence to |
| 28°18′00″, | 94°00′00″, thence to |
| 28°18′00″, | 92°38′00″, and thence to the point of beginning. |

(NAD 83)

### § 156.310 Prohibited areas.

Lightering operations are prohibited within the following areas in the Gulf of Mexico:

(a) *Claypile—prohibited area.* This prohibited area consists of the waters bounded by a line connecting the following points beginning at:

| *Latitude N.* | *Longitude W.* |
|---|---|
| 28°15′00″, | 94°35′00″, thence to |
| 27°40′00″, | 94°35′00″, thence to |
| 27°40′00″, | 94°00′00″, thence to |
| 28°33′00″, | 94°00′00″, and thence to the point of beginning. |

(NAD 83)

(b) *Flower Garden—prohibited area.* This prohibited area consists of the waters bounded by a line connecting the following points beginning at:

| *Latitude N.* | *Longitude W.* |
|---|---|
| 27°40′00″, | 94°00′00″, thence to |
| 28°18′00″, | 94°00′00″, thence to |
| 28°18′00″, | 92°38′00″, thence to |
| 28°30′00″, | 92°38′00″, thence to |
| 28°15′00″, | 91°30′00″, thence to |
| 27°40′00″, | 91°30′00″, and thence to the point of beginning. |

(NAD 83)

(c) *Ewing—prohibited area.* This prohibited area consists of the waters bounded by a line connecting the following points beginning at:

| *Latitude N.* | *Longitude W.* |
|---|---|
| 27°53′00″, | 91°30′00″, thence to |
| 28°15′00″, | 91°30′00″, thence to |
| 28°15′00″, | 90°10′00″, thence to |
| 27°53′00″, | 90°10′00″, and thence to the point of beginning. |

(NAD 83)

### § 156.320 Maximum operating conditions.

Unless otherwise specified, the maximum operating conditions in this section apply to tank vessels operating within the lightering zones designated in this subpart.

(a) A tank vessel shall not attempt to moor alongside another vessel when either of the following conditions exist:

(1) The wind velocity is 56 km/hr (30 knots) or more; or

(2) The wave height is 3 meters (10 feet) or more.

(b) Cargo transfer operations shall cease and transfer hoses shall be drained when—

(1) The wind velocity exceeds 82 km/hr (44 knots); or

(2) Wave heights exceed 5 meters (16 feet).

### § 156.330 Operations.

(a) Unless otherwise specified in this subpart, or when otherwise authorized by the cognizant Captain of the Port (COTP) or District Commander, the master of a vessel lightering in a zone designated in this subpart shall ensure that all officers and appropriate members of the crew are familiar with the guidelines in paragraphs (b) and (c) of this section and that the requirements of paragraphs (d) through (l) of this section are complied with.

(b) Lightering operations should be conducted in accordance with the Oil Companies International Marine Forum Ship to Ship Transfer Guide (Petroleum), Second Edition, 1988, to the maximum extent practicable.

(c) Helicopter operations should be conducted in accordance with the International Chamber of Shipping Guide to Helicopter/Ship Operations, Third Edition, 1989, to the maximum extent practicable.

(d) The vessel to be lightered shall make a voice warning prior to the commencement of lightering activities via channel 13 VHF and 2182 Khz. The voice warning shall include:

(1) The names of the vessels involved;

(2) The vessels' geographical positions and general headings;

(3) A description of the operations;

(4) The expected time of commencement and duration of the operation; and

(5) Request for wide berth.

(e) In the event of a communications failure between the lightering vessels or the respective persons-in-charge of the transfer, or an equipment failure affecting the vessel's cargo handling capability or ship's maneuverability, the affected vessel shall suspend lightering activities and shall sound at least five short, rapid blasts on the vessel's whistle. Lightering activities shall remain suspended until corrective action has been completed.

(f) No vessel involved in a lightering operation may open its cargo system until the servicing vessel is securely moored alongside the vessel to be lightered.

(g) If any vessel not involved in the lightering operation or support activities approaches within 100 meters of vessels engaged in lightering, the vessel engaged in lightering shall warn the approaching vessel by sounding a loud hailer, ship's whistle, or any other appropriate means.

(h) Only a lightering tender, a supply boat, or a crew boat, equipped with a spark arrestor on its exhaust, or a tank vessel providing bunkers, may moor alongside a vessel engaged in lightering operations.

(i) Lightering operations shall not be conducted within 1 nautical mile of offshore structures or mobile offshore drilling units.

(j) No vessel engaged in lightering activities may anchor over charted pipelines, artificial reefs, or historical resources.

(k) All vessels engaged in lightering activities shall be able to immediately maneuver at all times while inside a designated lightering zone. The main

propulsion system must not be disabled at any time.

(l) In preparing to moor alongside the vessel to be lightered, a service vessel shall not approach the vessel to be lightered closer than 1000 meters unless the service vessel is positioned broad on the quarter of the vessel to be lightered. The service vessel must transition to a nearly parallel heading prior to closing to within 50 meters of the vessel to be lightered.

# PART 157—RULES FOR THE PROTECTION OF THE MARINE ENVIRONMENT RELATING TO TANK VESSELS CARRYING OIL IN BULK

## Subpart A—General

Sec.
157.01 Applicability.
157.02 Incorporation by reference: Where can I get a copy of the publications mentioned in this part?
157.03 Definitions.
157.04 Authorization of classification societies.
157.05 Performing calculations for this part.
157.06 Appeals.
157.07 Equivalents.

## Subpart B—Design, Equipment, and Installation

157.08 Applicability of subpart B.
157.09 Segregated ballast.
157.10 Segregated ballast tanks and crude oil washing systems for certain new vessels.
157.10a Segregated ballast tanks, crude oil washing systems, and dedicated clean ballast tanks for certain new and existing vessels of 40,000 DWT or more.
157.10b Segregated ballast tanks, dedicated clean ballast tanks, and special ballast arrangements for tank vessels transporting Outer Continental Shelf oil.
157.10c Segregated ballast tanks, crude oil washing systems, and dedicated clean ballast tanks for certain new and existing tankships of 20,000 to 40,000 DWT.
157.10d Double hulls on tank vessels.
157.11 Pumping, piping and discharge arrangements.
157.12 Oil discharge monitoring and control system.
157.12a Definitions.
157.12b Implementation requirements.
157.12c Construction, maintenance, security, calibration, and training.
157.12d Technical specifications.
157.12e Certificate of approval.
157.12f Workshop functional test requirements.
157.12g Plan approval requirements.
157.13 Designated observation area.
157.15 Slop tanks in tank vessels.
157.17 Oil residue (sludge) tank.
157.19 Cargo tank arrangement and size.
157.21 Subdivision and stability.
157.22 Intact stability requirements.
157.23 Cargo and ballast system information.
157.24 Submission of calculations, plans, and specifications.
157.24a Submission of calculations, plans, and specifications for existing vessels installing segregated ballast tanks.

## Subpart C—Vessel Operation

157.25 Applicability of subpart C.
157.26 Operation of a tank vessel in violation of regulations.
157.27 Discharges: Tank vessels carrying oil exclusively on rivers, lakes, bays, sounds, and the Great Lakes, and seagoing tank vessels of less than 150 gross tons.
157.28 Discharges from tank barges exempted from certain design requirements.
157.29 Discharges: Seagoing tank vessels of 150 gross tons or more.
157.31 Discharges: Chemical additives.
157.33 Water ballast in fuel oil tanks.
157.35 Ballast added to cargo tanks.
157.37 Discharge of oily mixtures from oil cargoes.
157.39 Machinery space bilges.
157.41 Emergencies.
157.43 Discharges of clean and segregated ballast: Seagoing tank vessels of 150 gross tons or more.
157.45 Valves in cargo or ballast piping system.
157.47 Information for master.
157.49 Instruction manual.

## Subpart D—Crude Oil Washing (COW) System on Tank Vessels

GENERAL

157.100 Plans for U.S. tank vessels: Submission.
157.102 Plans for foreign tank vessels: Submission.
157.104 Scale models.
157.106 Letter of acceptance.
157.108 Crude Oil Washing Operations and Equipment Manual for U.S. tank vessels: Submission.
157.110 Crude Oil Washing Operations and Equipment Manual for foreign tank vessels: Submission.
157.112 Approved Crude Oil Washing Operations and Equipment Manual.
157.114 Crude Oil Washing Operations and Equipment Manual: Not approved.

157.116 Required documents: U.S. tank vessels.
157.118 Required documents: Foreign tank vessels.
157.120 Waiver of required documents.

DESIGN, EQUIPMENT, AND INSTALLATION

157.122 Piping, valves, and fittings.
157.124 COW tank washing machines.
157.126 Pumps.
157.128 Stripping system.
157.130 Crude oil washing with more than one grade of crude oil.
157.132 Cargo tanks: Hydrocarbon vapor emissions.
157.134 Cargo tank drainage.
157.136 Two-way voice communications.
157.138 Crude Oil Washing Operations and Equipment Manual.

INSPECTIONS

157.140 Tank vessel inspections.
157.142 Letter of acceptance: Inspections.
157.144 Tank vessels of the same class: Inspections.
157.146 Similar tank design: Inspections on U.S. tank vessels.
157.147 Similar tank design: Inspections on foreign tank vessels.
157.148 COW system: Evidence for inspections.
157.150 Crude Oil Washing Operations and Equipment Manual: Recording information after inspections.

PERSONNEL

157.152 Person in charge of COW operations.
157.154 Assistant personnel.

COW OPERATIONS

157.155 COW operations: General.
157.156 COW operations: Meeting manual requirements.
157.158 COW operations: Changed characteristics.
157.160 Tanks: Ballasting and crude oil washing.
157.162 Crude oil washing during a voyage.
157.164 Use of inert gas system.
157.166 Hydrocarbon emissions.
157.168 Crew member: Main deck watch.
157.170 COW equipment: Removal.
157.172 Limitations on grades of crude oil carried.

## Subpart E—Dedicated Clean Ballast Tanks on Tank Vessels

GENERAL

157.200 Plans for U.S. tank vessels: Submission.
157.202 Plans and documents for foreign tank vessels: Submission.
157.204 Letter of acceptance.
157.206 Dedicated Clean Ballast Tanks Operations Manual for U.S. tank vessels: Submission.
157.208 Dedicated Clean Ballast Tanks Operations Manual for foreign tank vessels: Submission.
157.210 Approved Dedicated Clean Ballast Tanks Operations Manual.
157.212 Dedicated Clean Ballast Tanks Operations Manual: Not approved.
157.214 Required documents: U.S. tank vessels.
157.216 Required documents: Foreign tank vessels.
157.218 Dedicated clean ballast tanks: Alterations.

DESIGN AND EQUIPMENT

157.220 Dedicated clean ballast tanks: Standards.
157.222 Pump and piping arrangements.
157.224 Dedicated Clean Ballast Tanks Operations Manual.

DEDICATED CLEAN BALLAST TANKS OPERATIONS

157.225 Dedicated clean ballast tanks operations: General.
157.226 Dedicated Clean Ballast Tanks Operations Manual: Procedures to be followed.
157.228 Isolating Valves: Closed during a voyage.

## Subpart F—Exemption From § 157.10a or § 157.10c

157.300 Qualifications for exemptions under this part.
157.302 Applying for an exemption or requesting modification of an exemption.
157.304 Shore-based reception facility: standards.
157.306 Granting, denying, or modifying an exemption.
157.308 Revocation of exemption: procedure and appeals.
157.310 Exempted vessels: operations.

## Subpart G—Interim Measures for Certain Tank Vessels Without Double Hulls Carrying Petroleum Oils

157.400 Purpose and applicability.
157.410 Emergency lightering requirements for oil tankers.
157.415 Bridge resource management policy and procedures.
157.420 Vessel specific watch policy and procedures.
157.430 Enhanced survey requirements.
157.435 Vital systems surveys.
157.440 Autopilot alarm or indicator.
157.445 Maneuvering performance capability.
157.450 Maneuvering and vessel status information.

157.455 Minimum under-keel clearance.
157.460 Additional operational requirements for tank barges.

### Subpart H—Interim Measures for Certain Tank Vessels Without Double Hulls Carrying Animal Fat or Vegetable Oil

157.500 Purpose and applicability.
157.510 Operational measures.

### Subpart I—Interim Measures for Certain Tank Vessels Without Double Hulls Carrying Other Non-Petroleum Oil

157.600 Purpose and applicability.
157.610 Operational measures.
APPENDIX A TO PART 157—DAMAGE ASSUMPTIONS, HYPOTHETICAL OUTFLOWS, AND CARGO TANK SIZE AND ARRANGEMENTS
APPENDIX B TO PART 157—SUBDIVISION AND STABILITY ASSUMPTIONS
APPENDIX C TO PART 157—PROCEDURE FOR DETERMINING DISTRIBUTION OF SEGREGATED BALLAST TANKS TO PROVIDE PROTECTION AGAINST OIL OUTFLOW IN THE EVENT OF GROUNDING, RAMMING, OR COLLISION
APPENDIX D TO PART 157—EXAMPLE OF A PROCEDURE FOR DEDICATED CLEAN BALLAST TANKS OPERATIONS
APPENDIX E TO PART 157—SPECIFICATIONS FOR THE DESIGN, INSTALLATION AND OPERATION OF A PART FLOW SYSTEM FOR CONTROL OF OVERBOARD DISCHARGES
APPENDIX F TO PART 157 [RESERVED]
APPENDIX G TO PART 157—TIMETABLES FOR APPLICATION OF DOUBLE HULL REQUIREMENTS

AUTHORITY: 33 U.S.C. 1903; 46 U.S.C. 3703, 3703a (note); Department of Homeland Security Delegation No. 0170.1. Subparts G, H, and I are also issued under section 4115(b), Pub. L. 101–380, 104 Stat. 520; Pub. L. 104–55, 109 Stat. 546.

SOURCE: CGD 74–32, 40 FR 48283, Oct. 14, 1975, unless otherwise noted.

EDITORIAL NOTE: Nomenclature changes to part 157 appear by USCG–2008–0179, 73 FR 35015, June 19, 2008.

## Subpart A—General

### § 157.01 Applicability.

(a) Unless otherwise indicated, this part applies to each vessel that carries oil in bulk as cargo and that is:

(1) Documented under the laws of the United States (a U.S. vessel); or

(2) Any other vessel that enters or operates in the navigable waters of the United States, or that operates, conducts ligtering under 46 U.S.C. 3715, or receives cargo from or transfers cargo to a deepwater port under 33 U.S.C. 1501 *et seq.*, in the United States Exclusive Economic Zone, as defined in 33 U.S.C. 2701(8).

(b) This part does not apply to a vessel exempted under 46 U.S.C. 2109 or 46 U.S.C. 3702.

[CGD 90–051, 57 FR 36238, Aug. 12, 1992, as amended by CGD 91–045, 61 FR 39788, July 30, 1996]

### § 157.02 Incorporation by reference: Where can I get a copy of the publications mentioned in this part?

(a) Certain material is incorporated by reference into this part with the approval of the Director of the Federal Register under 5 U.S.C. 552(a) and 1 CFR part 51. To enforce any edition other than that specified in this section, the Coast Guard must publish notice of change in the FEDERAL REGISTER and the material must be available to the public. All approved material is available for inspection at the National Archives and Records Administration (NARA). For information on the availability of this material at NARA, call 202–741–6030 or go to *http://www.archives.gov/federal_register/code_of_federal_regulations/ibr_locations.html*. Also, it is available for inspection at the Coast Guard, Systems Engineering Division (CG–5213), Office of Design and Engineering Standards, U.S. Coast Guard, 2100 2nd St. SW., Stop 7126, Washington, DC 20593–7126, telephone 202–372–1379, and is available from the sources indicated in this section.

(b) *International Maritime Organization (IMO)*—4 Albert Embankment, London SE1 7SR, United Kingdom.

(1) IMCO Assembly Resolution A.393(X), adopted on 14 November 1977, Recommendation on International Performance and Test Specifications For Oily Water Separating Equipment and Oil Content Meters (''A.393(x)''), incorporation by reference approved for § 157.12.

(2) IMO Assembly Resolution A.496(XII), Adopted on 19 November 1981, Agenda Item 11, Guidelines and Specifications for Oil Discharge Monitoring and Control Systems for Oil Tankers (''A.496(XII)''), incorporation by reference approved for § 157.12.

(3) IMO Assembly Resolution A.586(14), Adopted on 20 November 1985, Agenda item 12, Revised Guidelines and Specifications for Oil Discharge Monitoring and Control Systems for Oil Tankers (''A.586(14)''), incorporation by reference approved for § 157.12.

(4) IMO Marine Environment Protection Committee Resolution MEPC.13 (19), adopted on 9 December 1983, Guidelines for Plan Approval and Installation Survey of Oil Discharge Monitoring and Control Systems for Oil Tankers and Environmental Testing of Control Sections Thereof (''MEPC.13(19)''), incorporation by reference approved for § 157.12.

(5) IMO Marine Environment Protection Committee Resolution MEPC.108(49), Adopted on 18 July 2003, Revised Guidelines and Specifications for Oil Discharge Monitoring and Control Systems for Oil Tankers (''MEPC.108(49)''), incorporation by reference approved for § 157.12.

(6) IMO Assembly Resolution A.601(15), Provision and Display of Manoeuvring Information on Board Ships, Annex sections 1.1, 2.3, 3.1, and 3.2 with appendices, adopted on 19 November 1987 (''A.601(15)''), incorporation by reference approved for § 157.450.

(7) IMO Assembly Resolution A.744(18), Guidelines on the Enhanced Programme of Inspections During Surveys of Bulk Carriers and Oil Tankers, Annex B sections 1.1.3–1.1.4, 1.2–1.3, 2.1, 2.3–2.6, 3–8, and Annexes 1–10 with appendices, adopted 4 November 1993 (''A.744(18)''), incorporation by reference approved for § 157.430.

(8) IMO Assembly Resolution A.751(18), Interim Standards for Ship Manoeuvrability, Annex sections 1.2, 2.3–2.4, 3–4.2, and 5, adopted 4 November 1993 with Explanatory Notes in MSC/Circ. 644 dated 6 June 1994 (''A.751(18)''), incorporation by reference approved for § 157.445.

(c) *Oil Companies International Marine Forum (OCIMF)* 27 Queen Anne's Gate, London, SW1H 9BU, England].

(1) International Safety Guide for Oil Tankers and Terminals, Fourth Edition, Chapters 6, 7, and 10, 1996, incorporation by reference approved for § 157.435.

(2) [Reserved]

[USCG–2004–18939, 74 FR 3378, Jan. 16, 2009, as amended by USCG–2010–0351, 75 FR 36286, June 25, 2010]

## § 157.03 Definitions.

Except as otherwise stated in a subpart:

*Amidships* means the middle of the length.

*Animal fat* means a non-petroleum oil, fat, or grease derived from animals and not specifically identified elsewhere in this part.

*Ballast voyage* means the voyage that a tank vessel engages in after it leaves the port of final cargo discharge.

*Breadth* or *B* means the maximum molded breadth of a vessel in meters.

*Cargo tank length* means the length from the forward bulkhead of the forwardmost cargo tanks, to the after bulkhead of the aftermost cargo tanks.

*Center tank* means any tank inboard of a longitudinal bulkhead.

*Clean ballast* means ballast which:

(1) If discharged from a vessel that is stationary into clean, calm water on a clear day, would not—

(i) Produce visible traces of oil on the surface of the water or on adjoining shore lines; or

(ii) Cause a sludge or emulsion to be deposited beneath the surface of the water or upon adjoining shore lines; or

(2) If verified by an approved oil discharge monitoring and control system, has an oil content that does not exceed 15 p.m.

*Combination carrier* means a vessel designed to carry oil or solid cargoes in bulk.

*Crude oil* means any liquid hydrocarbon mixture occurring naturally in the earth, whether or not treated to render it suitable for transportation, and includes crude oil from which certain distillate fractions may have been removed, and crude oil to which certain distillate fractions may have been added.

*Deadweight* or *DWT* means the difference in metric tons between the lightweight displacement and the total displacement of a vessel measured in water of specific gravity 1.025 at the load waterline corresponding to the assigned summer freeboard.

*Dedicated clean ballast tank* means a cargo tank that is allocated solely for the carriage of clean ballast.

*Domestic trade* means trade between ports or places within the United States, its territories and possessions, either directly or via a foreign port including trade on the navigable rivers, lakes, and inland waters.

*Double bottom* means watertight protective spaces that do not carry any oil and which separate the bottom of tanks that hold any oil within the cargo tank length from the outer skin of the vessel.

*Double hull* means watertight protective spaces that do not carry any oil and which separate the sides, bottom, forward end, and aft end of tanks that hold any oil within the cargo tank length from the outer skin of the vessel as prescribed in § 157.10d.

*Doubles sides* means watertight protective spaces that do not carry any oil and which separate the sides of tanks that hold any oil within the cargo tank length from the outer skin of the vessel.

*Existing vessel* means any vessel that is not a new vessel.

*Fleeting or assist towing vessel* means any commercial vessel engaged in towing astern, alongside, or pushing ahead, used solely within a limited geographic area, such as a particular barge fleeting area or commercial facility, and used solely for restricted service, such as making up or breaking up larger tows.

*Foreign trade* means any trade that is not domestic trade.

*From the nearest land* means from the baseline from which the territorial sea of the United States is established in accordance with international law.

*Fuel oil* means any oil used as fuel for machinery in the vessel in which it is carried.

*Inland vessel* means a vessel that is not oceangoing and that does not operate on the Great Lakes.

*Instantaneous rate of discharge of oil content* means the rate of discharge of oil in liters per hour at any instant, divided by the speed of the vessel in knots at the same instant.

*Integrated tug barge* means a tug and a tank barge with a mechanical system that allows the connection of the propulsion unit (the tug) to the stern of the cargo carrying unit (the tank barge) so that the two vessels function as a single self-propelled vessel.

Large primary structural member includes any of the following:

(1) Web frames.

(2) Girders.

(3) Webs.

(4) Main brackets.

(5) Transverses.

(6) Stringers.

(7) Struts in transverse web frames when there are 3 or more struts and the depth of each is more than 1/15 of the total depth of the tank.

*Length* or *L* means the distance in meters from the fore side of the stem to the axis of the rudder stock on a waterline at 85 percent of the least molded depth measured from the molded baseline, or 96 percent of the total length on that waterline, whichever is greater. In vessels designed with drag, the waterline is measured parallel to the designed waterline.

*Lightweight* means the displacement of a vessel in metric tons without cargo, fuel oil, lubricating oil, ballast water, fresh water, and feedwater in tanks, consumable stores, and any persons and their effects.

*Major conversion* means a conversion of an existing vessel that:

(1) Substantially alters the dimensions or carrying capacity of the vessel, except a conversion that includes only the installation of segregated ballast tanks, dedicated clean ballast tanks, a crude oil washing system, double sides, a double bottom, or a double hull;

(2) Changes the type of vessel;

(3) Substantially prolongs the vessel's service life; or

(4) Otherwise so changes the vessel that it is essentially a new vessel, as determined by the Commandant (CG–543).

*MARPOL 73/78* means the International Convention for the Prevention of Pollution from Ships, 1973, as modified by the Protocol of 1978 relating to that Convention. A copy of MARPOL 73/78 is available from the International Maritime Organization, 4 Albert Embankment, London, SE1

*New vessel* means:

(1) A U.S. vessel in domestic trade that:

(i) Is constructed under a contract awarded after December 31, 1974;

(ii) In the absence of a building contract, has the keel laid or is at a similar stage of construction after June 30, 1975;

(iii) Is delivered after December 31, 1977; or

(iv) Has undergone a major conversion for which:

(A) The contract is awarded after December 31, 1974;

(B) In the absence of a contract, conversion is begun after June 30, 1975; or

(C) Conversion is completed after December 31, 1977; and

(2) A foreign vessel or a U.S. vessel in foreign trade that:

(i) Is constructed under a contract awarded after December 31, 1975;

(ii) In the absence of a building contract, has the keel laid or is at a similar stage of construction after June 30, 1976;

(iii) Is delivered after December 31, 1979; or

(iv) Has undergone a major conversion for which:

(A) The contract is awarded after December 31, 1975;

(B) In the absence of a contract, conversion is begun after June 30, 1976; or

(C) Conversion is completed after December 31, 1979.

*Non-petroleum oil* means oil of any kind that is not petroleum-based. It includes, but is not limited to, animal fat and vegetable oil.

*Oceangoing* has the same meaning as defined in §151.05 of this chapter.

*Officer in charge of a navigational watch* means any officer employed or engaged to be responsible for navigating or maneuvering the vessel and for maintaining a continuous vigilant watch during his or her periods of duty and following guidance set out by the master, international or national regulations, and company policies.

*Oil* means oil of any kind or in any form including, but not limited to, petroleum, fuel oil, sludge, oil refuse, and oil mixed with wastes other than dredged spoil. This includes liquid hydrocarbons as well as animal and vegetable oils.

*Oil cargo residue* means any residue of oil cargo whether in solid, semi-solid, emulsified, or liquid form from cargo tanks and cargo pump room bilges, including but not limited to, drainages, leakages, exhausted oil, muck, clingage, sludge, bottoms, paraffin (wax), and any constituent component of oil. The term ''oil cargo residue'' is also known as ''cargo oil residue.''

*Oil residue* means—

(1) Oil cargo residue; and

(2) Other residue of oil whether in solid, semi-solid, emulsified, or liquid form, resulting from drainages, leakages, exhausted oil, and other similar occurrences from machinery spaces.

*Oil spill response vessel* means a vessel that is exclusively dedicated to operations to prevent or mitigate environmental damage due to an actual or impending accidental oil spill. This includes a vessel that performs routine service as an escort for a tank vessel, but excludes a vessel that engages in any other commercial activity, such as the carriage of any type of cargo.

*Oil tanker* means a vessel that is constructed or adapted primarily to carry crude oil or products in bulk as cargo. This includes a tank barge, a tankship, and a combination carrier, as well as a vessel that is constructed or adapted primarily to carry noxious liquid substances in bulk as cargo and which also carries crude oil or products in bulk as cargo.

*Oily mixture* means a mixture, in any form, with any oil content. ''Oily mixture'' includes, but is not limited to—

(1) Slops from bilges;

(2) Slops from oil cargoes (such as cargo tank washings, oily waste, and oily refuse);

(3) Oil residue; and

(4) Oily ballast water from cargo or fuel oil tanks, including any oil cargo residue.

*Oily mixture* means a mixture with any oil content.

*Other non-petroleum oil* means an oil of any kind that is not petroleum oil, an animal fat, or a vegetable oil.

*Permeability of a space* means the ratio of the volume within a space that is assumed to be occupied by water to the total volume of that space.

*Petroleum oil* means petroleum in any form, including but not limited to,

crude oil, fuel oil, sludge, oil residue, and refined products.

*Primary towing vessel* means any vessel engaged in towing astern, alongside, or pushing ahead and includes the tug in an integrated tug barge. It does not include fleeting or assist towing vessels.

*Product* means any liquid hydrocarbon mixture in any form, except crude oil, petrochemicals, and liquefied gases.

*Segregated ballast* means the ballast water introduced into a tank that is completely separated from the cargo oil and fuel oil system and that is permanently allocated to the carriage of ballast.

*Slop tank* means a tank specifically designated for the collection of cargo drainings, washings, and other oily mixtures.

*Tank* means an enclosed space that is formed by the permanent structure of a vessel, and designed for the carriage of liquid in bulk.

*Tank barge* means a tank vessel not equipped with a means of self-propulsion.

*Tank vessel* means a vessel that is constructed or adapted primarily to carry, or that carries, oil or hazardous material in bulk as cargo or cargo residue, and that—

(1) Is a vessel of the United States;

(2) Operates on the navigable waters of the United States; or

(3) Transfers oil or hazardous material in a port or place subject to the jurisdiction of the United States. This does not include an offshore supply vessel, or a fishing vessel or fish tender vessel of not more than 750 gross tons when engaged only in the fishing industry.

*Tankship* means a tank vessel propelled by mechanical power or sail.

*Vegetable oil* means a non-petroleum oil or fat not specifically identified elsewhere in this part that is derived from plant seeds, nuts, kernels, or fruits.

*Wing tank* means a tank that is located adjacent to the side shell plating.

[CGD 96–026, 61 FR 33666, June 28, 1996; 61 FR 36786, July 12, 1996, as amended by CGD 91–045, 61 FR 39788, July 30, 1996; USCG–2000–7641, 66 FR 55572, Nov. 2, 2001; USCG–2004–18939, 74 FR 3378, Jan. 16, 2009]

## § 157.04 Authorization of classification societies.

(a) The Coast Guard may authorize any classification society (CS) to perform certain plan reviews, certifications, and inspections required by this part on vessels classed by that CS, except that only U.S. classification societies may be authorized to perform those plan reviews, inspections, and certifications for U.S. vessels.

(b) If a CS desires authorization to perform the plan reviews, certifications, and inspections required under this part, it must submit to the Commandant (CG–543), U.S. Coast Guard, 2100 2nd St. SW., Stop 7581, Washington, DC 20593–7581, evidence from the governments concerned showing that they have authorized the CS to inspect and certify vessels on their behalf under the MARPOL 73/78.

(c) The Coast Guard notifies the CS in writing whether or not it is accepted as an authorized CS. If authorization is refused, reasons for the refusal are included.

(d) Acceptance as an authorized CS terminates unless the following are met:

(1) The authorized CS must have each Coast Guard regulation that is applicable to foreign vessels on the navigable waters of the United States.

(2) Each issue concerning equivalents to the regulations in this part must be referred to the Coast Guard for determination.

(3) Copies of any plans, calculations, records of inspections, or other documents relating to any plan review, inspection, or certification performed to meet this part must be made available to the Coast Guard.

(4) Each document certified under §§ 157.116(a)(2), 157.118(b)(1)(ii), and 157.216(b)(1)(ii) must be marked with the name or seal of the authorized CS.

(5) A copy of the final documentation that is issued to each vessel that is certified under this part must be referred to the Commandant (CG–543), U.S.

Coast Guard, 2100 2nd St. SW., Stop 7581, Washington, DC 20593–7581.

(Reporting and Recordkeeping requirements approved by the Office of Management and Budget under control number 1625–0036)

[CGD 82–28, 50 FR 11625, and 11630, Mar. 22, 1985, as amended by CGD 88–052, 53 FR 25122, July 1, 1988; CGD 96–026, 61 FR 33668, June 28, 1996; USCG–2000–7641, 66 FR 55573, Nov. 2, 2001; USCG–2006–25150, 71 FR 39210, July 12, 2006; USCG–2010–0351, 75 FR 36286, June 25, 2010]

### § 157.05 Performing calculations for this part.

In this part, unless the context requires otherwise:

(a) Formulas are in the International System of Units (SI);

(b) Values used in those formulas must be in the International System of Units; and

(c) Forward and after perpendiculars are located at the forward end and at the after end of the length. The forward perpendicular coincides with the foreside of the stem on the waterline on which the length of the vessel is measured.

### § 157.06 Appeals.

(a) Any person directly affected by an action taken under this part may request reconsideration by the Coast Guard official who is responsible for that action.

(b) Any person not satisfied with a ruling made under the procedure contained in paragraph (a) of this section may appeal that ruling in writing, except as allowed under paragraph (e) of this section, to the Coast Guard District Commander of the district in which the action was taken. The appeal may contain supporting documentation and evidence that the appellant wishes to have considered. If requested, the District Commander may stay the effect of the action being appealed while the ruling is being reviewed. The District Commander issues a ruling after reviewing the appeal submitted under this paragraph.

(c) Any person not satisfied with a ruling made under the procedure contained in paragraph (b) of this section may appeal that ruling in writing, except as allowed under paragraph (e) of this section, to the Assistant Commandant for Marine Safety, Security, and Stewardship (CG–5), U.S. Coast Guard, 2100 2nd St. SW., Stop 7355, Washington, DC 20593–7355. The appeal may contain supporting documentation and evidence that the appellant wishes to have considered. If requested, the Assistant Commandant for Marine Safety, Security and Stewardship (CG–5) may stay the effect of the action being appealed while the ruling is being reviewed. The Chief, Marine Safety, Security and Environmental Protection issues a ruling after reviewing the appeal submitted under this paragraph.

(d) Any decision made by the Assistant Commandant for Marine Safety, Security, and Stewardship (CG–5) under the procedure contained in paragraph (c) of this section is final agency action.

(e) If the delay in presenting a written appeal would have a significant adverse impact on the appellant, the appeal under paragraph (b) or (c) of this section may initially be presented orally. If an initial presentation of the appeal is made orally, the appellant must submit the appeal in writing within five days of the oral presentation to the Coast Guard official to whom the oral presentation was made. The written appeal must contain, at a minimum the basis for the appeal and a summary of the material presented orally.

[CGD 77–058b, 45 FR 43706, June 30, 1980, as amended by CGD 88–052, 53 FR 25122, July 1, 1988; CGD 96–026, 61 FR 33667, 33668, June 28, 1996; CGD 97–023, 62 FR 33364, June 19, 1997; USCG–2002–12471, 67 FR 41333, June 18, 2002; USCG–2008–0179, 73 FR 35015, June 19, 2008; USCG–2010–0351, 75 FR 36286, June 25, 2010]

### § 157.07 Equivalents.

The Coast Guard may accept an equivalent, in accordance with the procedure in 46 CFR 30.15–1, of a design or an equipment to fulfill a requirement in this part, except an operational method may not be substituted for a design or equipment requirement that is also required under the MARPOL 73/78.

[CGD 82–28, 50 FR 11625, Mar. 22, 1985, as amended by CGD 97–023, 62 FR 33364, June 19, 1997; USCG–2000–7641, 66 FR 55573, Nov. 2, 2001]

## Subpart B—Design, Equipment, and Installation

### § 157.08 Applicability of subpart B.

NOTE: An ''oil tanker'' as defined in § 157.03 includes barges as well as self-propelled vessels.

(a) Sections 157.10d and 157.11(g) apply to each vessel to which this part applies.

(b) Sections 157.11 (a) through (f), 157.12, 157.15, 157.19(b)(3), 157.33, and 157.37 apply to each vessel to which this part applies that carries 200 cubic meters or more of crude oil or products in bulk as cargo, as well as to each oceangoing oil tanker to which this part applies of 150 gross tons or more. These sections do not apply to a foreign vessel which remains beyond the navigable waters of the United States and does not transfer oil cargo at a port or place subject to the jurisdiction of the United States.

(c) Section 157.21 applies to each oil tanker to which this part applies of 150 gross tons or more that is oceangoing or that operates on the Great Lakes. This section does not apply to a foreign vessel which remains beyond the navigable waters of the United States and does not transfer oil cargo at a port or place subject to the jurisdiction of the United States.

(d) Sections in subpart B of 33 CFR part 157 that are not specified in paragraphs (a) through (c) of this section apply to each oceangoing oil tanker to which this part applies of 150 gross tons or more, unless otherwise indicated in paragraphs (e) through (m) of this section. These sections do not apply to a foreign vessel which remains beyond the navigable waters of the United States and does not transfer oil cargo at a port or place subject to the jurisdiction of the United States.

(e) Sections 157.11 (a) through (f), 157.12, and 157.15 do not apply to a vessel, except an oil tanker, that carries less than 1,000 cubic meters of crude oil or products in bulk as cargo and which retains oily mixtures on board and discharges them to a reception facility.

(f) Sections 157.11 (a) through (f), 157.12, 157.13, and 157.15 do not apply to a tank vessel that carries only asphalt, carbon black feedstock, or other products with similar physical properties, such as specific gravity and cohesive and adhesive characteristics, that inhibit effective product/water separation and monitoring.

(g) Sections 157.11 (a) through (f), 157.12, 157.13, 157.15, and 157.23 do not apply to a tank barge that cannot ballast cargo tanks or wash cargo tanks while underway.

(h) Sections 157.19 and 157.21 do not apply to a tank barge that is certificated by the Coast Guard for limited short protected coastwise routes if the barge is otherwise constructed and certificated for service exclusively on inland routes.

(i) Section 157.09(d) does not apply to any:

(1) U.S. vessel in domestic trade that is constructed under a contract awarded before January 8, 1976;

(2) U.S. vessel in foreign trade that is constructed under a contract awarded before April 1, 1977; or

(3) Foreign vessel that is constructed under a contract awarded before April 1, 1977.

(j) Sections 157.09 and 157.10a do not apply to a new vessel that:

(1) Is constructed under a building contract awarded after June 1, 1979;

(2) In the absence of a building contract, has the keel laid or is at a similar stage of construction after January 1, 1980;

(3) Is delivered after June 1, 1982; or

(4) Has undergone a major conversion for which:

(i) The contract is awarded after June 1, 1979;

(ii) In the absence of a contract, conversion is begun after January 1, 1980; or

(iii) Conversion is completed after June 1, 1982.

(k) Sections 157.09(b)(3), 157.10(c)(3), 157.10a(d)(3), and 157.10b(b)(3) do not apply to tank barges.

(l) Section 157.10b does not apply to tank barges if they do not carry ballast while they are engaged in trade involving the transfer of crude oil from an offshore oil exploitation or production facility on the Outer Continental Shelf of the United States.

(m) Section 157.12 does not apply to a U.S. vessel that:

(1) Is granted an exemption under Subpart F of this part; or

(2) Is engaged solely in voyages that are:

(i) Between ports or places within the United States, its territories or possessions;

(ii) Of less than 72 hours in length; and

(iii) At all times within 50 nautical miles of the nearest land.

(n) Section 157.10d does not apply to:

(1) A vessel that operates exclusively beyond the navigable waters of the United States and the United States Exclusive Economic Zone, as defined in 33 U.S.C. 2701(8);

(2) An oil spill response vessel;

(3) Before January 1, 2015—

(i) A vessel unloading oil in bulk as cargo at a deepwater port licensed under the Deepwater Port Act of 1974 (33 U.S.C. 1501 *et seq.*); or

(ii) A delivering vessel that is offloading oil in bulk as cargo in lightering activities—

(A) Within a lightering zone established under 46 U.S.C. 3715(b)(5); and

(B) More than 60 miles from the territorial sea base line, as defined in 33 CFR 2.20.

(4) A vessel documented under 46 U.S.C., Chapter 121, that was equipped with a double hull before August 12, 1992;

(5) A barge of less than 1,500 gross tons as measured under 46 U.S.C., Chapter 145, carrying refined petroleum in bulk as cargo in or adjacent to waters of the Bering Sea, Chukchi Sea, and Arctic Ocean and waters tributary thereto and in the waters of the Aleutian Islands and the Alaskan Peninsula west of 155 degrees west longitude; or

(6) A vessel in the National Defense Reserve Fleet pursuant to 50 App. U.S.C. 1744.

[CGD 75–240, 41 FR 54179, Dec. 13, 1976, as amended by CGD 77–058b, 45 FR 43707, June 30, 1980; CGD 79–152, 45 FR 82249, Dec. 15, 1980; CGD 76–088b, 48 FR 45720, Oct. 6, 1983; CGD 90–051, 57 FR 36239, Aug. 12, 1992; 57 FR 40494, Sept. 3, 1992; CGD 97–023, 62 FR 33364, June 19, 1997; USCG–2008–0179, 73 FR 35015, June 19, 2008]

### § 157.09 Segregated ballast.

(a) A new vessel of 70,000 tons DWT or more must have segregated ballast tanks that have a total capacity to allow the vessel to meet the draft and trim requirements in paragraph (b) of this section without recourse to the use of oil tanks for water ballast.

(b) In any ballast condition during any part of a voyage, including that of lightweight with only segregated ballast, the vessel's drafts and trim must have the capability of meeting each of the following requirements:

(1) The molded draft amidship (dm) in meters without taking into account vessel deformation must not be less than dm in the following mathematical relationship:

$$dm=2.0+0.02L$$

(2) The drafts at the forward and after perpendiculars must correspond to those determined by the draft amidship as specified in paragraph (b)(1) of this section, in association with the trim by the stern of no more than 0.015L.

(3) The minimum allowable draft at the after perpendicular is that which is necessary to obtain full immersion of the propeller.

(c) The vessel may be designed to carry ballast water in cargo tanks during the condition described in § 157.35.

(d) Segregated ballast spaces, voids, and other noncargo-carrying spaces for a vessel of conventional form must be distributed:

(1) So that the mathematical average of the hypothetical collision ($O_c$) and the hypothetical stranding ($O_s$) outflows as determined by the application of the procedures in § 157.19 and appendix B is 80 percent or less of the maximum allowable outflow ($O_A$) as determined by § 157.19(b)(1); and

(2) To protect at least 45 percent of the sum of the side and bottom shell areas, based upon projected molded dimensions, within the cargo tank length. When the vessel design configuration does not provide for the spaces to be distributed to protect at least 45 percent of the side and bottom shell areas, the spaces must be distributed so that the mathematical average of the hypothetical collision ($O_c$) and the hypothetical stranding ($O_s$) outflows, determined by application of the procedures in § 157.19 and appendix B, is a further 2 percent less than the maximum allowable outflow ($O_a$) for each 1 percent by which the shell area protection coverage required is not achieved.

(e) A ballast space, void or other noncargo-carrying space used to meet requirements in paragraph (d) of this section must separate the cargo tank boundaries from the shell plating of the vessel by at least 2 meters.

(f) A vessel of conventional form for application of this section has:

(1) A block coefficient of .80 or greater,

(2) A length to depth ratio between 12 and 16, and

(3) A breadth to depth ratio between 1.5 and 3.5.

(g) Segregated ballast spaces, voids, and other noncargo-carrying spaces for a vessel not of conventional form must be distributed in a configuration acceptable to the Coast Guard.

[CGD 74–32, 40 FR 48283, Oct. 14, 1975, as amended by CGD 74–32, 40 FR 49328, Oct. 22, 1975; CGD 75–201, 41 FR 1482, Jan. 8, 1976]

### § 157.10 Segregated ballast tanks and crude oil washing systems for certain new vessels.

(a) This section applies to a new vessel that:

(1) Is constructed under a building contract awarded after June 1, 1979;

(2) In the absence of a building contract, has the keel laid or is at a similar stage of construction after January 1, 1980;

(3) Is delivered after June 1, 1982; or

(4) Has undergone a major conversion for which:

(i) The contract is awarded after June 1, 1979;

(ii) In the absence of a contract, conversion is begun after January 1, 1980; or

(iii) Conversion is completed after June 1, 1982.

(b) Each tank vessel under this section of 20,000 DWT or more that carries crude oil and of 30,000 DWT or more that carries products must have segregated ballast tanks that have a total capacity to allow the vessel to meet the draft and trim requirements in paragraph (c) of this section without recourse to the use of cargo tanks for water ballast.

(c) In any ballast condition during any part of a voyage, including that of lightweight with only segregated ballast, each tank vessel under paragraph (b) of this section must have the capability of meeting each of the following:

(1) The molded draft amidship (dm) in meters, without taking into account vessel deformation, must not be less than dm in the following mathematical relationship:

$$dm = 2.0 + 0.02L$$

(2) The drafts at the forward and after perpendiculars must correspond to those determined by the draft amidship under paragraph (c)(1) of this section, in association with a trim by the stern of no more than 0.015L.

(3) The minimum draft at the after perpendicular is that which is necessary to obtain full immersion of the propeller.

(d) Segregated ballast tanks required in paragraph (b) of this section, voids, and other spaces that do not carry cargo must be distributed:

(1) For a vessel to which § 157.10d applies, in accordance with § 157.10d(c)(4); or,

(2) For a vessel to which § 157.10d does not apply, in accordance with the procedure contained in appendix C to this part.

(e) Each tank vessel under this section of 20,000 DWT or more that carries crude oil must have a crude oil washing system that meets the design, equipment, and installation requirements in subpart D of this part.

(f) Each tank vessel under this section may be designed to carry ballast water in cargo tanks as allowed under § 157.35.

[CGD 77–058b, 45 FR 43707, June 30, 1980, as amended by CGD 90–051, 57 FR 36239, Aug. 12, 1992]

### § 157.10a Segregated ballast tanks, crude oil washing systems, and dedicated clean ballast tanks for certain new and existing vessels of 40,000 DWT or more.

(a) An existing vessel of 40,000 DWT or more that carries crude oil and a new vessel of 40,000 DWT or more but less than 70,000 DWT that carries crude oil must have:

(1) Segregated ballast tanks with a total capacity to meet the draft and trim requirements in paragraph (d) of this section; or

(2) A crude oil washing system that meets the design, equipment, and installation requirements of subpart D of this part.

(b) [Reserved]

(c) An existing vessel of 40,000 DWT or more that carries products and a new vessel of 40,000 DWT or more but less than 70,000 DWT that carries products must have:

(1) Segregated ballast tanks with a total capacity to meet the draft and trim requirements in paragraph (d) of this section; or

(2) Dedicated clean ballast tanks that have a total capacity to meet the draft and trim requirements in paragraph (d) of this section and that meet the design and equipment requirements under subpart E of this part.

(d) In any ballast condition during any part of a voyage, including that of lightweight with either segregated ballast in segregated ballast tanks or clean ballast in dedicated clean ballast tanks, each tank vessel under paragraph (a)(1), or (c) of this section must have the capability of meeting each of the following without recourse to the use of cargo tanks for water ballast:

(1) The molded draft amidship (dm) in meters, without taking into account vessel deformation, must not be less than dm in the following mathematical relationship:

$$dm=2.0+0.02L$$

(2) The drafts at the forward and after perpendiculars must correspond to those determined by the draft amidship under paragraph (d)(1) of this section, in association with a trim by the stern of no more than 0.015L.

(3) The minimum draft at the after perpendicular is that which is necessary to obtain full immersion of the propeller.

(e) Each tank vessel that meets paragraph (a)(1), or (c) of this section may be designed to carry ballast water in cargo tanks as allowed under § 157.35.

NOTE: Segregated ballast tanks located in wing tanks provide protection against oil outflow in the event of a collision, ramming, or grounding.

[CGD 77–058b, 45 FR 43707, June 30, 1980, as amended by CGD 82–28, 50 FR 11626, Mar. 22, 1985; USCG–1998–3799, 63 FR 35531, June 30, 1998]

## § 157.10b Segregated ballast tanks, dedicated clean ballast tanks, and special ballast arrangements for tank vessels transporting Outer Continental Shelf oil.

(a) Each tank vessel that is engaged in the transfer of crude oil from an offshore oil exploitation or production facility on the Outer Continental Shelf of the United States on or after June 1, 1980 must, if segregated ballast tanks or dedicated clean ballast tanks are not required under § 157.09, § 157.10 or § 157.10a, have one of the following:

(1) Segregated ballast tanks with a total capacity to meet the draft and trim requirements in paragraph (b) of this section.

(2) Dedicated clean ballast tanks having a total capacity to meet the draft and trim requirements in paragraph (b) of this section and meeting the design and equipment requirements under subpart E of this part.

(3) Special ballast arrangements acceptable to the Coast Guard.

(b) In any ballast condition during any part of a voyage, including that of lightweight with either segregated ballast in segregated ballast tanks or clean ballast in dedicated clean ballast tanks, each vessel under paragraph (a)(1) or (a)(2) of this section must have the capability of meeting each of the following:

(1) The molded draft amidship (dm), in meters, without taking into account vessel deformation, must not be less than ''dm'' in the following mathematical relationship:

$$dm=2.00+0.020L \text{ for vessels of 150 meters or more in length}$$

$$dm=1.25+0.025L \text{ for vessels less than 150 meters in length}$$

(2) The drafts, in meters, at the forward and after perpendiculars must correspond to those determined by the draft amidship under paragraph (b)(1) of this section, in association with a trim, in meters, by the stern (t) of no more than ''t'' in the following mathematical relationship:

$$t=0.015L \text{ for vessels of 150 meters or more in length}$$

$$t=1.5+0.005L \text{ for vessels less than 150 meters in length}$$

(3) The minimum draft at the after perpendicular is that which is necessary to obtain full immersion of the propeller.

(c) Special ballast arrangements are accepted under the procedures in paragraph (d) of this section if:

(1) The vessel is dedicated to one specific route;

(2) Each offshore transfer facility on the route is less than 50 miles from shore;

(3) The duration of the ballast voyage is less than 10 hours;

(4) They prevent the mixing of ballast water and oil; and

(5) They provide suitable draft and trim to allow for the safe navigation of the vessel on the intended route.

(d) The owner or operator of a vessel that meets paragraph (c) of this section must apply for acceptance of the special ballast arrangement, in writing, to the Officer in Charge, Marine Inspection, of the zone in which the vessel operates. The application must contain:

(1) The specific route on which the vessel would operate;

(2) The type of ballast to be carried;

(3) The location of the ballast on the vessel;

(4) Calculations of draft and trim for maximum ballast conditions; and

(5) The associated operating requirements or limitations necessary to ensure safe navigation of the vessel.

NOTE: Operating requirements or limitations necessary to ensure safe navigation of the vessel could include (but are not limited to) weather conditions under which the vessel would not operate and weather conditions under which cargo would be carried in certain cargo tanks on the ballast voyage.

(e) The Coast Guard will inform each applicant for special ballast arrangements under paragraph (d) of this section whether or not the arrangements are accepted. If they are not accepted, the reasons why they are not accepted will be stated.

(f) Each tank vessel under this section may be designed to carry ballast water in cargo tanks, as allowed under § 157.35.

[CGD 79–152, 45 FR 82249, Dec. 15, 1980]

### § 157.10c Segregated ballast tanks, crude oil washing systems, and dedicated clean ballast tanks for certain new and existing tankships of 20,000 to 40,000 DWT.

(a) This section applies to each tankship of 20,000 DWT or more, but less then 40,000 DWT, except each one that—

(1) Is constructed under a building contract awarded after June 1, 1979;

(2) In the absence of a building contract, has the keel laid or is at a similar stage of construction after January 1, 1980;

(3) Is delivered after June 1, 1982; or

(4) Has undergone a major conversion, for which—

(i) The contract is awarded after June 1, 1979; or

(ii) Conversion is completed after June 1, 1982.

(b) On January 1, 1986, or 15 years after the date it was delivered to the original owner or 15 years after the completion of a major conversion, whichever is later, a vessel under this section that carries crude oil must have—

(1) Segregated ballast tanks that have a total capacity to allow the vessel to meet the draft and trim requirements in § 157.09(b); or

(2) A crude oil washing system that meets the design, equipment, and installation requirements of §§ 157.122 through 157.138.

(c) On January 1, 1986, or 15 years after the date it was delivered to the original owner or 15 years after the completion of a major conversion, whichever is later, a vessel under this section that carries product must have—

(1) Segregated ballast tanks that have total capacity to allow the vessel to meet the draft and trim requirements in § 157.09(b); or

(2) Dedicated clean ballast tanks that meet the design and equipment requirements under §§ 157.220, 157.222, and 157.224 and have total capacity to allow the vessel to meet the draft and trim requirements in § 157.09(b).

(d) If the arrangement of tanks on a vessel under this section is such that, when using the tankage necessary to comply with the draft and trim requirements in § 157.09(b), the draft

amidships exceeds the minimum required draft by more the 10 percent, or the arrangement results in the propeller being fully immersed by more than 10 percent of its diameter, alternative arrangements may be accepted provided—

(1) At least 80 percent of the propeller diameter is immersed; and

(2) The moulded draft amidships is at least 80 percent of that required under § 157.09(b)(1).

[CGD 82–28, 50 FR 11626, Mar. 22, 1985; 50 FR 12800, Apr. 1, 1985]

### § 157.10d Double hulls on tank vessels.

(a) With the exceptions stated in § 157.08(n), this section applies to a tank vessel—

(1) For which the building contract is awarded after June 30, 1990;

(2) That is delivered after December 31, 1993;

(3) That undergoes a major conversion for which;

(i) The contract is awarded after June 30, 1990; or

(ii) Conversion is completed after December 31, 1993; or

(4) That is otherwise required to have a double hull by 46 U.S.C. 3703a(c).

NOTE: The double hull compliance dates of 46 U.S.C. 3703a(c) are set out in appendix G to this part. To determine a tank vessel's double hull compliance date under OPA 90, use the vessel's hull configuration (*i.e.*, single hull; single hull with double sides; or single hull with double bottom) on August 18, 1990.

(b) Each vessel to which this section applies must be fitted with:

(1) A double hull in accordance with this section; and

(2) If § 157.10 applies, segregated ballast tanks and a crude oil washing system in accordance with that section.

(c) Except on a vessel to which § 157.10d(d) applies, tanks within the cargo tank length that carry any oil must be protected by double sides and a double bottom as follows:

(1) Double sides must extend for the full depth of the vessel's side or from the uppermost deck, disregarding a rounded gunwale where fitted, to the top of the double bottom. At any cross section, the molded width of the double side, measured at right angles to the side shell plating, from the side of tanks containing oil to the side shell plating, must not be less than the distance $w$ as shown in Figure 157.10d(c) and specified as follows:

(i) For a vessel of 5,000 DWT and above: $w$=[0.5+(DWT/20,000)] meters; or, $w$=2.0 meters (79 in.), whichever is less, but in no case less than 1.0 meter (39 in.).

(ii) For a vessel of less than 5,000 DWT: $w$=[0.4+(2.4)(DWT/20,000)] meters, but in no case less than 0.76 meter (30 in.).

(iii) For a vessel to which paragraph (a)(4) of this section applies: $w$=0.76 meter (30 in.), provided that the double side was fitted under a construction or conversion contract awarded prior to June 30, 1990.

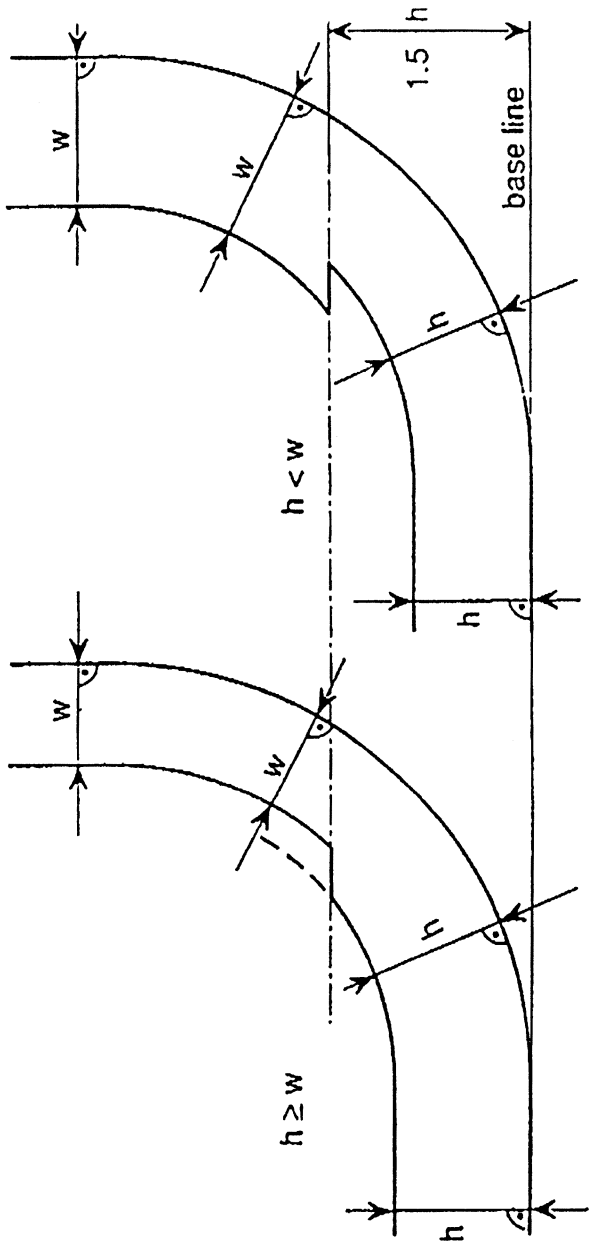


FIGURE 157.10d(c) Minimum Double Hull Dimensions

(2) At any cross section, the molded depth of the double bottom, measured at right angles to the bottom shell plating, from the bottom of tanks containing oil to the bottom shell plating, must not be less than the distance *h* as shown in Figure 157.10d(c) and specified as follows:

(i) For a vessel of 5,000 DWT and above: $h$=B/15; or, $h$=2.0 meters (79 in.), whichever is less, but in no case less than 1.0 meter (39 in.).

(ii) For a vessel of less than 5,000 DWT: $h$=B/15, but in no case less than 0.76 meter (30 in.).

(iii) For a vessel to which paragraph (a)(4) of this section applies: $h$=B/15; or, $h$=2.0 meters (79 in.), whichever is the lesser, but in no case less than 0.76 meter (30 in.), provided that the double bottom was fitted under a construction or conversion contract awarded prior to June 30, 1990.

(3) For a vessel built under a contract awarded after September 11, 1992, within the turn of the bilge or at cross sections where the turn of the bilge is not clearly defined, tanks containing oil must be located inboard of the outer shell—

(i) For a vessel of 5,000 DWT and above: At levels up to 1.5$h$ above the base line, not less than the distance $h$, as shown in Figure 157.10d(c) and specified in paragraph (c)(2) of this section. At levels greater than 1.5$h$ above the base line, not less than the distance $w$, as shown in Figure 157.10d(c) and specified in paragraph (c)(1) of this section.

(ii) For a vessel of less than 5,000 DWT: Not less than the distance $h$ above the line of the mid-ship flat bottom, as shown in Figure 157.10d(c)(3)(ii) and specified in paragraph (c)(2) of this section. At levels greater than $h$ above the line of the mid-ship flat bottom, not less than the distance $w$, as shown in Figure 157.10d(c)(3)(ii) and specified in paragraph (c)(1) of this section.

Figure 157.10d(c)(3)(ii) - Minimum Double Hull Dimensions Within the Turn of the Bilge of Vessels Under 5,000 DWT

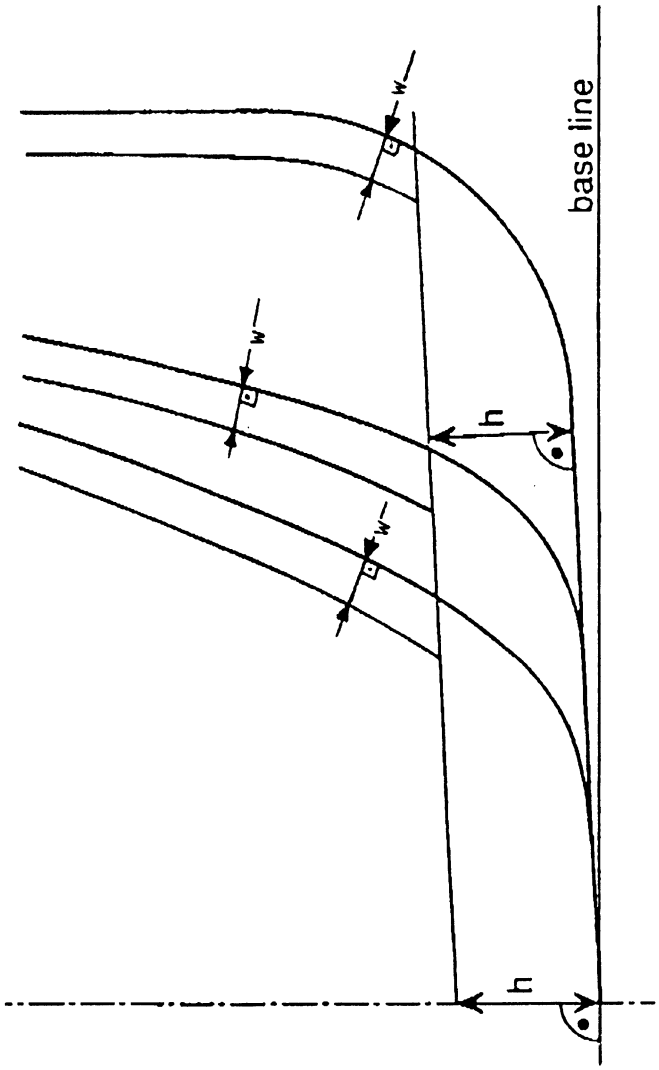


(4) For a vessel to which § 157.10(b) applies that is built under a contract awarded after September 11, 1992.

(i) The aggregate volume of the double sides, double bottom, forepeak tanks, and afterpeak tanks must not be less than the capacity of segregated

ballast tanks required under § 157.10(b). Segregated ballast tanks that may be provided in addition to those required under § 157.10(b) may be located anywhere within the vessel.

(ii) Double side and double bottom tanks used to meet the requirements of § 157.10(b) must be located as uniformly as practicable along the cargo tank length. Large inboard extensions of individual double side and double bottom tanks, which result in a reduction of overall side or bottom protection, must be avoided.

(d) A vessel of less than 10,000 DWT that is constructed and certificated for service exclusively on inland or limited short protected coastwise routes must be fitted with double sides and a double bottom as follows:

(1) A minimum of 61 cm. (2 ft.) from the inboard side of the side shell plate, extending the full depth of the side or from the main deck to the top of the double bottom, measured at right angles to the side shell; and

(2) A minimum of 61 cm. (2 ft.) from the top of the bottom shell plating, along the full breadth of the vessel's bottom, measured at right angles to the bottom shell.

(3) For a vessel to which paragraph (a)(4) of this section applies, the width of the double sides and the depth of the double bottom may be 38 cm. (15 in.), in lieu of the dimensions specified in paragraphs (d)(1) and (d)(2) of this section, provided that the double side and double bottom tanks were fitted under a construction or conversion contract awarded prior to June 30, 1990.

(4) For a vessel built under a contract awarded after September 11, 1992, a minimum 46 cm. (18 in.) clearance for passage between framing must be maintained throughout the double sides and double bottom.

(e) Except as provided in paragraph (e)(3) of this section, a vessel must not carry any oil in any tank extending forward of:

(1) The collision bulkhead; or

(2) In the absence of a collision bulkhead, the transverse plane perpendicular to the centerline through a point located:

(i) The lesser of 10 meters (32.8 ft.) or 5 percent of the vessel length, but in no case less than 1 meter (39 in.), aft of the forward perpendicular;

(ii) On a vessel of less than 10,000 DWT tons that is constructed and certificated for service exclusively on inland or limited short protected coastwise routes, the lesser of 7.62 meters (25 ft.) or 5 percent of the vessel length, but in no case less than 61 cm. (2 ft.), aft of the headlog or stem at the freeboard deck; or

(iii) On each vessel which operates exclusively as a box or trail barge, 61 cm. (2 ft.) aft of the headlog.

(3) This paragraph does not apply to independent fuel oil tanks that must be located on or above the main deck within the areas described in paragraphs (e)(1) and (e)(2) of this section to serve adjacent deck equipment that cannot be located further aft. Such tanks must be as small and as far aft as is practicable.

(f) On each vessel, the cargo tank length must not extend aft to any point closer to the stern than the distance equal to the required width of the double side, as prescribed in § 157.10d(c)(1) or § 157.10d(d)(1).

[CGD 90–051, 57 FR 36239, Aug. 12, 1992, as amended by USCG–1999–6164, 65 FR 39262, June 23, 2000]

### § 157.11 Pumping, piping and discharge arrangements.

(a) Each tank vessel must have a fixed piping system for transferring oily mixtures from cargo tanks to slop tanks and for discharging oily mixtures to the sea and to reception facilities. On a vessel that has two or more independent piping arrangements, the arrangements collectively form the fixed piping system required by this paragraph.

(b) Each fixed piping system required by paragraph (a) of this section must have:

(1) At least two manifolds on the weather deck for transferring oily mixtures to reception facilities, one of which is on the port side of the vessel and one of which is on the starboard side; and

(2) Except as provided in paragraph (c) of this section, at least one discharge point that:

(i) Is used for discharges to the sea;

(ii) Is on a port or starboard weather deck or on the vessel's side above the waterline of its deepest ballast condition; and

(iii) Has an automatic stop valve that is actuated by an oil content meter signal, except that manual valves may be provided on new vessels of less than 4,000 tons deadweight and on existing vessels.

(c) An above waterline discharge point is not required on an existing vessel if its fixed piping system meets paragraphs 3 and 4 of appendix E of this part.

(d) Each tank vessel under § 157.09, § 157.10a, or § 157.10b that carries crude oil must have:

(1) Equipment that drains each cargo pump and oil piping line of oil residue;

(2) Oil piping lines for the draining of oil residue from cargo pumps and other oil piping lines to a cargo tank or a slop tank; and

(3) An oil piping line that meets paragraph (f) of this section and is connected to the cargo discharge piping on the outboard side of the manifold valves for the draining of oil residue from cargo pumps and other oil piping lines to a receptacle on the shore.

(e) Each tank vessel under § 157.10 must have:

(1) Oil piping lines that are designed and installed to minimize oil retention in those lines;

(2) Equipment that drains each cargo pump and oil piping line of oil residue;

(3) Oil piping lines for the draining of oil residue from cargo pumps and other oil piping lines to a cargo tank or slop tank; and

(4) An oil piping line that meets paragraph (f) of this section and is connected to the cargo discharge piping on the outboard side of the manifold valves for the draining of oil residue from cargo pumps and other oil piping lines to a receptacle on the shore.

(f) Each oil piping line under paragraph (d)(3) or (e)(4) of this section must have a cross-sectional area of 10 percent or less of the cross-sectional area of the main cargo discharge piping line, except if the oil piping line under paragraph (d)(3) of this section is installed before January 1, 1980, that piping line may have a cross-sectional area of 25 percent or less of the cross-sectional area of the main cargo discharge piping line.

(g) Each tank vessel to which § 157.10d applies that is built under a contract awarded after September 11, 1992 must be arranged so that:

(1) Except for short lengths of completely welded (or equivalent) piping,

(i) Ballast piping and other piping to ballast tanks, such as sounding and vent piping, do not pass through cargo tanks, and

(ii) Cargo piping and other piping to cargo tanks do not pass through ballast tanks;

(2) Suction wells in cargo tanks that protrude into the double bottom are as small as practicable and extend no closer to the bottom shell plating than $0.5h$, as specified in § 157.10d(c)(2) or § 157.10d(d)(2), as applicable; and

(3) On a vessel that is constructed and certificated for service exclusively on inland, Great Lakes, or limited short protected coastwise routes, any oil piping that is located within double hull spaces must be placed as far from the outer shell as is practicable and must be fitted with valves at the point of connection to the tank served, to prevent oil outflow in the event of damage to the piping. Such valves must be closed whenever the vessel is underway with any oil in tanks served by the associated piping, except as necessary during transfer operations.

NOTE: Piping location requirements for an oceangoing vessel are in § 157.19(d). Related operating requirements are in § 157.45.

[CGD 74–32, 40 FR 48283, Oct. 14, 1975, as amended by CGD 80–78, 45 FR 43704, June 30, 1980; CGD 77–058b, 45 FR 43708, June 30, 1980; CGD 79–152, 45 FR 82250, Dec. 15, 1980; CGD 76–088b, 48 FR 45720, Oct. 6, 1983; CGD 90–051, 57 FR 36244, Aug. 12, 1992; USCG–2000–7641, 66 FR 55573, Nov. 2, 2001; USCG–2004–18939, 74 FR 3378, Jan. 16, 2009]

### § 157.12 Oil discharge monitoring and control system.

(a) Each vessel must have an oil discharge monitoring and control system (monitoring system) that is designed for use with each type of cargo oil that the vessel carries.

(b) Each oil content meter component of the monitoring system installed on a U.S. vessel must be approved under 46 CFR part 162, subpart

162.050. Each oil content meter component of the monitoring system installed on a foreign vessel must be approved:

(1) Under 46 CFR part 162, subpart 162.050; or

(2) As meeting IMO Marine Environment Protection Committee resolution MEPC.108(49) by a country that has ratified the MARPOL 73/78. Paragraph 1.2.2 of MEPC.108(49) provides, as to equipment installed in ''oil tankers the keels of which are laid, or which are at a similar stage of construction, before January 1, 2005,'' for alternative compliance with IMO resolutions A.393(X), A.496(XII), MEPC.13(19), and A.586(14). These five resolutions are incorporated by reference (*see* § 157.02).

(c) Each oil discharge monitoring and control system on a U.S. vessel must be installed in accordance with §§ 157.12b through 157.12g of this part.

[USCG–2004–18939, 74 FR 3378, Jan. 16, 2009]

### § 157.12a Definitions.

As used in §§ 157.12a through 157.12g—

*Control section* means a unit in a monitoring system composed of the items specified in § 157.12d(a)(4)(viii).

*Control unit* means a device that receives automatic signals of oil content of the effluent ppm, flow rate of discharge $m^3$/hour, ship's speed in knots, ship's position-latitude and longitude, date and time (GMT, Greenwich Mean Time), and status of the overboard discharge control. The control unit makes automatic recordings of data as specified in § 157.12d(h)(2).

*Oil discharge monitoring and control system* or *monitoring system* means a system that monitors the discharge into the sea of oily ballast or other oil-contaminated water from the cargo tank areas and comprises the items specified in § 157.12d(a)(4).

*Overboard discharge control* means a device that automatically initiates the sequence to stop the overboard discharge of the effluent in alarm conditions and prevents the discharge throughout the period the alarm condition prevails. The device may be arranged to close the overboard valves or to stop the relevant pumps, as appropriate.

*PPM* means parts of oil per million parts of water by volume.

*Starting interlock* means a facility that prevents the initiation of the opening of the discharge valve or the operation of other equivalent arrangements before the monitoring system is fully operational when use of the monitoring system is required by the Convention.

[USCG–2004–18939, 74 FR 3379, Jan. 16, 2009]

### § 157.12b Implementation requirements.

Oil discharge monitoring and control systems must be fitted to oil tankers to which this subpart applies. A monitoring and control system must employ a control unit and be fitted with a starting interlock and overboard discharge control.

[USCG–2004–18939, 74 FR 3379, Jan. 16, 2009]

### § 157.12c Construction, maintenance, security, calibration, and training.

(a) The oil discharge monitoring and control system must be designed to ensure that user access is restricted to essential controls. Access beyond these controls must be available for emergency maintenance and temporary repair but must require the breaking of security seals or activation of another device, which indicates an entry to the equipment.

(b) The seals must be of a design that only the manufacturer or the manufacturer's agent can replace the seals or reset the system following inspection and permanent repairs to the equipment.

(c) The accuracy of the monitoring system must be verified during International Oil Pollution Prevention certificate renewal surveys. The calibration certificate certifying date of last calibration check must be retained on board for inspection purposes.

(d) The monitoring system may have several scales as appropriate for its intended use. The recording device fitted to a meter which has more than one scale must indicate the scale which is in use.

(e) Simple means must be provided aboard ship to check on instrument drift, repeatability of the instrument reading, and the ability to re-zero the instrument.

(f) Ship staff training must include familiarization in the operation and the maintenance of the equipment.

(g) The routine maintenance of the monitoring system and trouble-shooting procedures must be clearly defined in the Operating and Maintenance Manual. All routine maintenance and repairs must be recorded.

[USCG–2004–18939, 74 FR 3379, Jan. 16, 2009]

### § 157.12d Technical specifications.

(a) *Oil discharge monitoring and control system.* (1) The monitoring system must be capable of effectively monitoring and controlling the discharge of any effluent into the sea through those overboard discharge outlets permitted by § 157.11 that are necessary to fulfill the operational requirements of the oil tanker.

(2) The discharge of dirty ballast water or other oil-contaminated water from the cargo tank areas into the sea through outlets, which are not controlled by the monitoring system is prohibited.

(3) The monitoring system must function effectively under all environmental conditions normally encountered by oil tankers, and must be designed and constructed to satisfy the specifications for approval in 46 CFR subpart 162.050. Moreover—

(i) The system must be designed so a discharge of dirty-ballast or other oil-contaminated water from the cargo tank areas cannot take place unless the monitoring system is in the normal operating mode and the relevant sampling point has been selected;

(ii) The system should sample the effluent discharge from a minimum number of discharge outlets and be arranged so that discharge overboard can take place via only one outlet at a time;

(iii) Where it is intended that more than one line be used for simultaneous discharging purposes, one oil content meter, together with a flow meter, must be installed in each discharge line. These instruments must be connected to a common processor; and

(iv) To avoid alarms because of short-term high-oil-concentration signals (spikes) causing indications of high instantaneous rates of discharge, the short-term high ppm signal may be suppressed for a maximum of 10 seconds. Alternatively, the instantaneous rate of discharge may be continuously averaged during the preceding 20 seconds or less as computed from instantaneous ppm values of the oil content meter readings received at intervals not exceeding 5 seconds.

(4) The monitoring system must comprise—

(i) An oil content meter to measure the oil content of the effluent in ppm. The meter must be approved in accordance with the provisions contained in 46 CFR subpart 162.050 and certified to take into account the range of cargoes carried;

(ii) A flow rate indicating system to measure the rate of effluent being discharged into the sea;

(iii) A ship speed indicating device to give the ship's speed in knots;

(iv) A ship position indicating device to give the ship's position-latitude and longitude;

(v) A sampling system to convey a representative sample of the effluent to the oil content meter;

(vi) An overboard discharge control to stop the overboard discharge;

(vii) A starting interlock to prevent the discharge overboard of any effluent unless the monitoring system is fully operational; and

(viii) A control section comprising—

(A) A processor that accepts signals of oil content in the effluent, the effluent flow rate, and the ship's speed, and computes these values into liters of oil discharged per nautical mile and the total quantity of oil discharged;

(B) A means to provide alarms and command signals to the overboard discharge control;

(C) A recording device to provide a record of data required under § 157.12d(h)(2);

(D) A data display to exhibit the current operational data required under § 157.12d(i);

(E) A manual override system to be used in the event of failure of the monitoring system;

(F) A means to provide signals to the starting interlock to prevent the discharge of any effluent before the monitoring system is fully operational; and

(G) The control section of the monitoring system must be tested in accordance with the vibration testing requirements described in 46 CFR 162.050–37.

(5) Each main component of the monitoring system must be fitted with a name plate, properly identifying the component by assembly drawing number, type or model number, and serial number, as appropriate.

(6) The electrical components of the monitoring system that are to be installed in an explosive atmosphere must be in compliance with 46 CFR 162.050–25.

(7) Each main component of the monitoring system must be designed in accordance with the applicable requirements contained in subchapters F and J.

(b) *Sampling system.* (1) Sampling points must be located so relevant samples can be obtained from those outlets used for operational discharges in accordance with paragraph (a) of this section. The sampling probes located in the overboard discharge lines and the piping system connecting the sampling probes to the oil content meter must meet the requirements of this paragraph.

(2) The piping and probes must be—

(i) Of a material resistant to fire, corrosion, and oil; and

(ii) Of adequate strength and properly jointed and supported.

(3) The system must have a stop-valve fitted adjacent to each probe, except that, where the probe is mounted in a cargo line, two stop-valves must be fitted, in series, in the sample line. One of these may be the remote controlled sample selector valve.

(4) Sampling probes must be arranged for easy withdrawal and must, as far as practicable, be mounted at an accessible location in a vertical section of the discharge line. Should it be necessary to fit sampling probes in a horizontal section of the discharge line it must be ascertained, during the installation survey, that the pipe runs full of liquid at all times during the discharge of the effluent. Sampling probes must normally penetrate inside the discharge pipe to a distance of one quarter the diameter of that pipe.

(5) Means must be provided for cleaning the probes and piping system by the provision of permanent clean water flushing arrangements or an equivalent method. The design of the probes and piping must be such as to minimize their clogging by oil, oily residue, and other matter.

(6) The velocity of the fluid in the piping must be such that, taking into consideration the length of the piping, the overall response time must be as short as possible between an alteration in the mixture being pumped and the alteration in the oil content meter reading. In no case should the response time, including the response time of the oil content meter, be more than 40 seconds.

(7) The location of sampling probes in relation to any point of flow diversion to a slop tank must be selected with regard to the need for sampling the oily water in the recirculation mode.

(8) The arrangements for driving the sampling pump or any other pumps used in the system must account for the safety requirements of the space in which the pump is located. Any bulkhead penetration between a hazardous and a non-hazardous area must be of a design meeting the requirements of 46 CFR 32.60–20 and 46 CFR subpart 111.105.

(9) The flushing arrangement must be such that where necessary it can be utilized for test-running and stabilizing the oil content meter and correcting for zero setting.

(10) Sample water returning to the slop tank must not be allowed to free-fall into the tank. In tankers equipped with an inert gas system, a water seal meeting the requirements of 46 CFR 32.53–10(b) must be arranged in the piping leading to a slop tank.

(11) A valve must be provided for the manual collection of samples from the inlet piping to the oil content meter at a point downstream of any sampling pump.

(c) *Flow rate indicating system.* (1) A flow meter for measuring the rate of discharge must be installed in a vertical section of a discharge line or in any other section of a discharge line as appropriate, so as to be always filled with the liquid being discharged.

(2) A flow meter must employ an operating principle which is suitable for shipboard use and, where relevant, can be used in large diameter pipes.

(3) A flow meter must be suitable for the full range of flow rates that may be encountered during normal operation. Alternatively, arrangements such as the use of two flow meters of different ranges or a restriction of the operational flow rate range may be employed if necessary to meet this requirement.

(4) The flow meter, as installed, must have an accuracy of ±10 percent, or better, of the instantaneous rate of discharge throughout the operating range for discharging the effluent.

(5) Any component part of the flow meter in contact with the effluent should be of corrosion-resistant and oil-resistant material of adequate strength.

(6) The design of the flow metering arrangements must account for the safety requirements of the space in which such metering arrangements are located.

(d) *Ship's speed indicating system.* The automatic speed signal required for a monitoring system must be obtained from the ship's speed indicating device by means of a repeater signal. The speed information used may be either speed over the ground or speed through the water, depending upon the speed measuring equipment installed on board.

NOTE TO PARAGRAPH (d): See ''Recommendation on Performance Standards for Devices to Indicate Speed and Distance,'' Annex to resolution A.824(19) as amended by resolution MSC.96(72).

(e) *Ship position indicating device.* The ship position indicating device must consist of a receiver for a global navigation satellite system, a terrestrial radio navigation system, or other means suitable for use at all times throughout the intended voyage to establish and update the ship's position by automatic means.

(f) *Overboard discharge control management.* The overboard discharge control must be able to stop the discharge of the effluent into the sea automatically by either closing all relevant overboard discharge valves or stopping all relevant pumps. The discharge control arrangement must be fail-safe so that all effluent discharge is stopped when the monitoring system is not in operation, at alarm conditions, or when the monitoring system fails to function.

(g) *Processor and transmitting device.* (1) The processor of a control section must receive signals from the oil content meter, the flow rate indicating system and the ship's speed indicating system at time intervals not exceeding 5 seconds and must automatically compute the following:

(i) Instantaneous rate of discharge of oil in liters per nautical mile; and

(ii) Total quantity of oil discharged during the voyage in cubic meters or liters.

(2) When the limits imposed by § 157.37(a)(3) and (4) are exceeded, the processor must provide alarms and provide command signals to the overboard discharge control arrangement, which will cause the discharge of effluent into the sea to stop.

(3) The processor must normally include a device for the continuous generation of time and date information. Alternative arrangements that ensure the automatic and continuous reception of time and date information from an external source may be approved by the Marine Safety Center.

(4) In the event of power failure the processor must retain its memory in respect to computation of the total quantity of oil discharged, time, and date. A printout of data must be obtained when the monitoring system is operating with manual override, but the printout of data is not required if, when the power fails, the monitoring system activates the overboard discharge control to stop the discharge of effluent.

(h) *Recording devices.* (1) The recording device of a control section must include a digital printer, which may be formatted electronically. The recorded parameters must be explicitly identified on the printout. The printout must be legible and must remain so once removed from the recording device and must be retained for at least 3 years.

(2) The data to be automatically recorded must include at least the following:

(i) Instantaneous rate of discharge of oil (liters per nautical mile);

(ii) Instantaneous oil content (ppm);

(iii) The total quantity of oil discharged (cubic meters or liters);

(iv) Time and date (GMT, Greenwich Mean Time);

(v) Ship's speed in knots;

(vi) Ship's position—latitude and longitude;

(vii) Effluent flow rate;

(viii) Status of the overboard discharge control or arrangement;

(ix) Oil type selector setting, where applicable;

(x) Alarm condition;

(xi) Failure, including, but not limited to, fault or no flow; and

(xii) Override action, including, but not limited to, manual override, flushing, and calibration. Any information inserted manually as a result of an override action must be identified as such on the printout.

(3) Data required in paragraph (h)(2) of this section must be printed out or may be stored electronically with printout capability, with the following minimum frequency:

(i) When the discharge is started;

(ii) When the discharge is stopped;

(iii) At intervals of not more than 10 minutes (except when the system is in stand-by mode);

(iv) When an alarm condition develops;

(v) When normal conditions are restored;

(vi) Whenever the computed rate of discharge varies by 10 liters per nautical mile;

(vii) When zero-setting or calibration modes are selected; and

(viii) On manual command.

(4) The recording device must be located in a position easily accessible to the person in charge of the overboard discharge operation.

(i) *Data display*. (1) In addition to the recorded printout, the current data must be visibly displayed and at a minimum contain the following:

(i) Instantaneous rate of discharge of oil (liters per nautical mile);

(ii) Total quantity of oil discharged (cubic meters or liters);

(iii) Instantaneous oil content (ppm);

(iv) Flow rate;

(v) Ship's speed; and

(vi) Status of the overboard discharge control or arrangement.

(2) The data display must be located in a position easily observed by the person in charge of the overboard discharge operation.

(j) *Manually operated alternatives in the event of equipment malfunction*. Acceptable alternative means of obtaining information in the event of a failure in the monitoring system include the following:

(1) Oil content meter or sampling system: Visual observation of the surface of the water adjacent to the effluent discharge;

(2) Flow meter: Pump discharge characteristics;

(3) Ship's speed indicating device: Main engine rpm;

(4) Processor: Manual calculation and manual recording; and

(5) Overboard discharge control: manual operation of pumps and valves.

(k) *Alarm conditions resulting in the stopping of discharge*. Audio-visual alarms must be activated for any of the following conditions and the monitoring system must be so arranged that the discharge of effluent into the sea is stopped:

(1) Whenever the instantaneous rate of discharge of oil exceeds 30 liters per nautical mile;

(2) When the total quantity of oil discharged reaches 1/30,000 of the previous cargo for new vessels and 1/15,000 for existing vessels; or

(3) In the event of failure of the system's operation, such as:

(i) Power failure;

(ii) Loss of sample;

(iii) Significant failure of the measuring or recording system; or

(iv) When the input of any sensor exceeds the effective capacity of the system.

(l) *Location of alarm indicator*. The alarm indicator of the system must be installed in the cargo control room, where provided, and/or in other places where it will attract immediate attention and action.

[USCG–2004–18939, 74 FR 3379, Jan. 16, 2009]

### § 157.12e Certificate of approval.

(a) A copy of the certificate of approval for the oil content meters must be carried aboard an oil tanker fitted with such equipment at all times.

(b) A certificate of type approval must be issued for the specific application for which the oil content meter is approved, that is, for crude oil, ''black'' products, ''white'' products, or other products or applications as listed on the certificate.

[USCG–2004–18939, 74 FR 3379, Jan. 16, 2009]

### § 157.12f Workshop functional test requirements.

(a) Each oil content meter and each control section of a monitoring system must be subjected to a functional test on a suitable test bench prior to delivery. The detailed program for a functional test of such equipment must be developed by the manufacturer, taking into account the features and functions of the specific design of equipment. A completed workshop certificate including the delivery test protocol must be received with each unit delivered.

(b) A functional test conducted on an oil content meter must include the following operations:

(1) A check of flow rate, pressure drop, or an equivalent parameter as appropriate;

(2) A check of all alarm functions built into the meter;

(3) A check of all switching functions interconnecting with other parts of the system; and

(4) A check for correct reading at several ppm values on all measurement scales when operated on an oil appropriate for the application of the oil content meter or by an equivalent method.

(c) A functional check conducted on a control section of a monitoring system must include the following operations:

(1) A check of all alarm functions;

(2) A check of the correct function of the signal processor and the recording equipment when simulated input signals of ppm, flow rate, and speed are varied;

(3) A check that the alarm is activated when the input signals are varied to exceed the discharge limits contained in § 157.37(a)(3) and (4);

(4) A check that a signal is given to the overboard discharge control when alarm conditions are reached; and

(5) A check that the alarm is activated when each one of the input signals is varied to exceed the capacity of the system.

[USCG–2004–18939, 74 FR 3379, Jan. 16, 2009]

### § 157.12g Plan approval requirements.

Adequate documentation must be prepared well in advance of the intended installation of a monitoring system and must be submitted to the Marine Safety Center for approval. The following documentation must be submitted:

(a) *A description of the monitoring system.* The description must include a diagram of the pumping and piping arrangements identifying the operational outlets for dirty ballast and oil-contaminated water from the cargo-tank area and compatible with the operational requirements set out in the oil tanker's cargo and ballast handling manuals. Special considerations will be given to installations in oil tankers, which have unusual pumping and piping arrangements.

(b) Equipment manuals, supplied by manufacturers, which must contain details of the major components of the monitoring system.

(c) An operations and technical manual for the complete monitoring system which is proposed to be installed in the oil tanker. This manual must cover the arrangements and operation of the system as a whole and must specifically describe parts of the system, which are not covered by the manufacturer's equipment manuals.

(d) The operations section of the manual must include normal operational procedures and procedures for the discharge of oily water in the event of malfunction of the equipment.

(e) The technical section of the manual must include adequate information (description and diagram of the pumping and piping arrangements of the monitoring system and electrical/electronic wiring diagrams) to enable fault finding and must include instructions for keeping a maintenance record.

(f) A technical installation specification defining, among other things, the location and mounting of components, arrangements for maintaining the integrity of the boundary between safe and hazardous spaces, and the arrangement of the sample piping, including calculation of the sample response

time referred to in § 157.12d(b)(6). The installation must comply with manufacturer's specific installation criteria.

(g) A copy of the certificate of type approval for the oil content meter.

(h) Technical documentation relevant to other main components of the monitoring system. This documentation must include the vibration report for the control section of the monitoring section.

(i) A recommended test and checkout procedure specific to the monitoring system installed. This procedure must specify all the checks to be carried out in a functional test by the installation contractor and must provide guidance for the surveyor when carrying out the onboard survey of the monitoring system and confirming the installation reflects the manufacturer's specific installation criteria.

[USCG–2004–18939, 74 FR 3379, Jan. 16, 2009]

### § 157.13 Designated observation area.

Each new vessel must have a designated observation area on the weather deck or above that is:

(a) Located where the effluent from each discharge point and manifold described in § 157.11 can be visually observed; and

(b) Equipped with:

(1) A means to directly stop the discharge of effluent into the sea; or

(2) A positive communication system, such as a telephone or a radio, between the observation area and the discharge control position.

[CGD 74–32, 40 FR 48283, Oct. 14, 1975, as amended by CGD 76–088b, 48 FR 45720, Oct. 6, 1983]

### § 157.15 Slop tanks in tank vessels.

(a) *Number*. A tank vessel must have the following number of slop tanks that comply with the requirements of this section:

(1) A new vessel of less than 70,000 tons DWT and an existing vessel must have at least one slop tank.

(2) A new vessel of 70,000 tons DWT or more must have at least two slop tanks.

(b) *Capacity*. Slop tanks must have the total capacity to retain oily mixtures from cargo tank washings, oil residue, and ballast water containing an oily mixture of 3 percent or more of the oil carrying capacity. Two percent capacity is allowed if there are—

(1) Segregated ballast tanks that meet the requirements in § 157.09, § 157.10, § 157.10a, or § 157.10b; or

(2) No eductors arrangements that use water in addition to the washing water.

(c) *Design*. A slop tank required in this section:

(1) Must minimize turbulence, entrainment of oil, and the creation of an emulsion by the use of separate inlet and outlet connections; and

(2) May carry bulk oil when not being used as a slop tank.

[CGD 74–32, 40 FR 48283, Oct. 14, 1975]

EDITORIAL NOTE: For FEDERAL REGISTER citations affecting § 157.15, see the List of CFR Sections Affected, which appears in the Finding Aids section of the printed volume and on GPO Access.

### § 157.17 Oil residue (sludge) tank.

(a) A tank vessel of 400 gross tons or more must have a tank that receives and holds oil residue resulting from purification of fuel and lubricating oil and from oil leakages in machinery spaces.

(b) Each oil residue (sludge) tank required in paragraph (a) of this section must have an adequate capacity that is determined by the:

(1) Type of machinery installed on the vessel; and

(2) Maximum fuel oil capacity.

(c) Each oil residue (sludge) tank on a new vessel must be designed to facilitate:

(1) Cleaning; and

(2) Discharging to a reception facility.

[CGD 74–32, 40 FR 48283, Oct. 14, 1975, as amended by CGD 80–78, 45 FR 43704, June 30, 1980; USCG–2000–7641, 66 FR 55573, Nov. 2, 2001]

### § 157.19 Cargo tank arrangement and size.

(a) This section applies to:

(1) A U.S. or foreign vessel that is delivered after January 1, 1977;

(2) A U.S. vessel that is delivered before January 1, 1977, for which the building contract is awarded after January 1, 1972, or, if there is no building contract, the keel is laid or the vessel

is at a similar stage of construction after June 30, 1972; and

(3) A foreign vessel that is delivered before January 1, 1977, for which the building contract is awarded after January 1, 1974, or, if there is no building contract, the keel is laid or the vessel is at a similar stage of construction after June 30, 1974.

(b) As determined in accordance with the procedures contained in appendix A of this part, each cargo tank must be of such size and arrangement that:

(1) The hypothetical outflow for side damage ($O_c$) or for bottom damage ($O_s$) anywhere within the length of the vessel must not exceed $O_A$ (30,000 cubic meters or $(400)\times(3\sqrt{\ }\ DWT)$ whichever is greater, limited to a maximum of 40,000 cubic meters);

(2) The volume of each wing tank and center tank is less than the allowable volume of a wing tank ($VOL_W$) and the allowable volume of a center tank ($VOL_C$) respectively; and

(3) The length of a tank is less than the allowable length of a tank ($l_a$).

(c) If a cargo transfer system interconnects two or more cargo tanks, the system must have valves to segregate the tanks from each other.

(d) If a line of piping that runs through a cargo tank in a position less than $t_c$ from the vessel's side or less than $v_s$ from the vessel's bottom as defined in appendix A of this part, has a branch, that branch must have a stop valve:

(1) Within each cargo tank into which the branch opens; or

(2) Outside each tank into which the branch opens in a location that is immediately adjacent to the point at which the branch enters the tank.

(e) If piping that serves suction wells is installed within a double bottom, that piping must be:

(1) Fitted with valves located at the point of connection to the tank served to prevent oil outflow in the event of damage to the piping; and

(2) Designed to be installed as high from the bottom shell as possible.

[CGD 74–32, 40 FR 48283, Oct. 14, 1975, as amended by CGD 75–240, 41 FR 54180, Dec. 13, 1976; CGD 76–088b, 48 FR 45720, Oct. 6, 1983; USCG–2000–7223, 65 FR 40058, June 29, 2000]

### § 157.21 Subdivision and stability.

A new vessel that is a U.S. vessel must meet the following subdivision and damage stability criteria after assuming side and bottom damages, as defined in appendix B of this part. A U.S. vessel that meets the requirements in this section is considered by the Coast Guard as meeting 46 CFR 42.20–5.

(a) The final waterline, taking into account sinkage, heel, and trim, must be below the lower edge of an opening through which progressive flooding may take place, such as an air pipe, or any opening that is closed by means of a weathertight door or hatch cover. This opening does not include an opening closed by a:

(1) Watertight manhole cover;

(2) Flush scuttle;

(3) Small watertight cargo tank hatch cover that maintains the high integrity of the deck;

(4) Remotely operated watertight sliding door; or

(5) Side scuttle of the non-opening type.

(b) In the final stage of flooding, the angle of heel due to unsymmetrical flooding must not exceed 25 degrees, except that this angle may be increased to 30 degrees if no deck edge immersion occurs.

(c) For acceptable stability in the final stage of flooding, the righting lever curve must have a range of at least 20 degrees beyond the position of equilibrium in association with a maximum residual righting lever of at least 0.1 meter. For the calculations required in this section, weathertight openings or openings fitted with automatic closures (e.g., a vent fitted with a ball check valve), need not be considered as points of downflooding within the range of residual stability, but other openings must be accounted for in the calculation.

[CGD 74–32, 40 FR 48283, Oct. 14, 1975, as amended by CGD 75–240, 41 FR 54180, Dec. 13, 1976]

### § 157.22 Intact stability requirements.

All tank ships of 5,000 DWT and above contracted after December 3, 2001 must comply with the intact stability

requirements of Regulation 27, Annex I MARPOL 73/78.

[USCG–2000–7641, 66 FR 55573, Nov. 2, 2001, as amended by USCG–2009–0416, 74 FR 27441, June 10, 2009]

### § 157.23 Cargo and ballast system information.

(a) Each tank vessel to which this part applies must have an instruction manual that describes the automatic and manual operation of the cargo and ballast system in the vessel.

(b) The format and information contained in the instruction manual required in paragraph (a) of this section must be similar to the manual entitled ''Clean Seas Guide for Oil Tankers'' which can be obtained from the International Chamber of Shipping, 30–32 St. Mary Axe, London, England, EC3A 8ET.

### § 157.24 Submission of calculations, plans, and specifications.

The owner, builder or designer of a new vessel to which this part applies shall submit the documentation specified in this section to the Coast Guard before that vessel enters the navigable waters of the United States. The owner, builder, or designer of a vessel that must comply with § 157.10d shall submit the documentation specified in this section to the Coast Guard before that vessel enters the navigable waters of the United States or the U.S. Exclusive Economic Zone.

(a) Calculations to substantiate compliance with the tank arrangement and size requirements under § 157.19, or a letter from the government of the vessel's flag state that certifies compliance with:

(1) Section 157.19; or

(2) Regulations 24 of Annex I of the International Convention for the Prevention of Pollution from Ships, 1973.

(b) Except for a new vessel that is a foreign vessel, calculations to substantiate compliance with subdivisions and damage stability requirements under § 157.21.

(c) Plans and calculations to substantiate compliance with the applicable segregated ballast and double hull requirements in §§ 157.09, 157.10, 157.10a, 157.10b, or 157.10d, or certification from the government of the vessel's flag state that the vessel complies with the segregated ballast and double hull requirements in:

(1) Sections 157.09, 157.10, 157.10a, 157.10b, or 157.10d, as applicable; or

(2) For a vessel to which § 157.10d does not apply, Regulations 13 and 13E of the MARPOL 73/78.

(d) Plans and specifications for the vessel that include:

(1) Design characteristics;

(2) A lines plan;

(3) Curves of form (hydrostatic curves) or hydrostatic tables;

(4) A general arrangement plan of each deck and level;

(5) Inboard and outboard profile plans showing oiltight and watertight bulkheads;

(6) A midship section plan;

(7) A capacity plan showing the capacity and the vertical and longitudinal centers of gravity of each cargo space, tank, and similar space;

(8) Tank sounding tables or tank capacity tables;

(9) Draft mark locations;

(10) Detailed plans of watertight doors; and

(11) Detailed plans of vents.

[CGD 75–240, 41 FR 54180, Dec. 13, 1976, as amended by CGD 77–058b, 45 FR 43708, June 30, 1980; CGD 79–152, 45 FR 82250, Dec. 15, 1980; CGD 90–051, 57 FR 36244, Aug. 12, 1992; USCG–2000–7641, 66 FR 55573, Nov. 2, 2001]

### § 157.24a Submission of calculations, plans, and specifications for existing vessels installing segregated ballast tanks.

(a) Before modifications are made to a U.S. tank vessel to meet § 157.10a(a)(1), § 157.10a(c)(1), § 157.10c(b)(1), or § 157.10c(c)(1), the vessel's owner or operator must submit the following to the Officer in Charge, Marine Inspection, of the zone where the modification will be made or to the appropriate Coast Guard technical office listed in 157.100(b):

(1) A drawing or diagram of the pumping and piping system for the segregated ballast tanks.

(2) A drawing of the segregated ballast tank arrangement.

(3) Documentation, calculations, or revised stability information to show that the vessel, with the addition of the segregated ballast tanks, meets the stability standards for load line assignment in 46 CFR part 42.

(4) Documentation, calculations, or a revised loading manual to show that the vessel, with the addition of the segregated ballast tanks, meets the structural standards in 46 CFR part 32.

(5) Plans and calculations to show that the vessel, as modified, complies with the segregated ballast capacity and distribution requirements in § 157.10a.

(b) Before each foreign vessel under § 157.10a(a)(1) or § 157.10a(c)(1) enters the navigable waters of the United States, the owner or operator of that vessel must—

(1) Submit to the Commandant (CG–543), U.S. Coast Guard, Washington, D.C. 20593–0001—

(i) A letter from the authority that assigns the load line to the vessel finding that the location of the segregated ballast tanks is acceptable; and

(ii) Plans and calculations to substantiate compliance with the segregated ballast capacity requirements in § 157.09(b); or

(2) Submit to the Officer in Charge, Marine Inspection, of the zone in which the first U.S. port call is made, a letter or document from the government of vessel's flag state certifying that the vessel complies with the segregated ballast capacity requirements in § 157.09(b) or Regulation 13 of the MARPOL 73/78.

(c) On January 1, 1986, or 15 years after the date it was delivered to the original owner, or 15 years after the completion of a major conversion, whichever is later, before that vessel enters the navigable waters of the United States, the owner or operator of an existing foreign vessel under § 157.10c(b)(1) or § 157.10c(c)(1) must—

(1) Submit to the Commandant (CG–543), U.S. Coast Guard, Washington, D.C. 20593–0001—

(i) A letter from the authority that assigns the load line to the vessel finding that the location of the segregated ballast tanks is acceptable; and

(ii) Plans and calculations to substantiate compliance with the applicable segregated ballast capacity requirements in § 157.09(b) or § 157.10c(d); or

(2) Submit to the Officer in Charge, Marine Inspection, of the zone in which the first U.S. port call is made a letter from an authorized CS or the government of the vessel's flag state certifying that the vessel complies with the segregated ballast capacity requirements in § 157.09(b) or § 157.10c(d).

(Reporting and Recordkeeping requirements approved by the Office of Management and Budget under control number 1625–0036)

[CGD 82–28, 50 FR 11626 and 11630, Mar. 22, 1985, as amended by CGD 88–052, 53 FR 25122, July 1, 1988; CGD 96–026, 61 FR 33668, June 28, 1996; USCG–2000–7641, 66 FR 55573, Nov. 2, 2001; USCG–2006–25150, 71 FR 39210, July 12, 2006]

## Subpart C—Vessel Operation

### § 157.25 Applicability of subpart C.

(a) This subpart applies to each vessel to which this part applies of 150 gross tons or more, unless otherwise indicated, that carries crude oil or products in bulk as cargo. This subpart does not apply to a foreign vessel which remains beyond the navigable waters of the United States and does not transfer oil cargo at a port or place subject to the jurisdiction of the United States.

(b) Sections 157.29, 157.31, 157.37(a)(5), 157.37(a)(6) and 157.43 apply to foreign vessels when they discharge into the navigable waters of the United States.

(c) Sections 157.35, 157.37, except paragraphs (a)(5) and (a)(6), 157.39, 157.45, and 157.47 do not apply to foreign vessels.

[CGD 76–088b, 48 FR 45720, Oct. 6, 1983, as amended by CGD 90–051, 57 FR 36244, Aug. 12, 1992]

### § 157.26 Operation of a tank vessel in violation of regulations.

No person may cause or authorize the operation of a tank vessel in violation of the regulations in this part.

[CGD 77–058b, 45 FR 43708, June 30, 1980]

### § 157.27 Discharges: Tank vessels carrying oil exclusively on rivers, lakes, bays, sounds, and the Great Lakes, and seagoing tank vessels of less than 150 gross tons.

Unless a tank vessel carrying oil exclusively on rivers, lakes, bays, sounds, and the Great Lakes, or a seagoing tank vessel of less than 150 gross tons discharges clean ballast or segregated ballast, the vessel must:

(a) Retain on board any oily mixture; or

(b) Transfer an oily mixture to a reception facility.

### § 157.28 Discharges from tank barges exempted from certain design requirements.

The person in charge of a tank barge exempted under § 157.08(g) from the requirements in §§ 157.11, 157.13, 157.15, and 157.23 shall ensure that while the barge is proceeding en route:

(a) Cargo tanks are not ballasted or washed; and

(b) Oil or oily mixtures are not discharged.

[CGD 74–32, 40 FR 48283, Oct. 14, 1975, as amended by CGD 76–088b, 48 FR 45721, Oct. 6, 1983; CGD 90–051, 57 FR 36244, Aug. 12, 1992]

### § 157.29 Discharges: Seagoing tank vessels of 150 gross tons or more.

Unless a seagoing tank vessel of 150 gross tons or more discharges an oily mixture in compliance with the requirements in § 157.37, § 157.39, or § 157.43, the vessel must:

(a) Retain the mixture; or

(b) Transfer the mixture to a reception facility.

### § 157.31 Discharges: Chemical additives.

No person may use a chemical additive to circumvent the discharge requirements in §§ 157.27, 157.29, 157.37, 157.39, and 157.43.

### § 157.33 Water ballast in fuel oil tanks.

A new vessel may not carry ballast water in a fuel oil tank.

[CGD 74–32, 40 FR 48283, Oct. 14, 1975, as amended by USCG–2000–7641, 66 FR 55573, Nov. 2, 2001]

### § 157.35 Ballast added to cargo tanks.

The master of a tank vessel with segregated ballast tanks or dedicated clean ballast tanks under § 157.09, § 157.10, § 157.10a(a)(1), § 157.10a(b), § 157.10a(c), § 157.10b(a), § 157.10c(b)(1), or § 157.10c(c) shall ensure that ballast water is carried in a cargo tank only if—

(a) The vessel encounters abnormally severe weather conditions;

(b) More ballast water than can be carried in segregated ballast tanks or dedicated clean ballast tanks is necessary for the safety of the vessel;

(c) The ballast water is processed and discharged in compliance with § 157.37; and

(d) On a new vessel under § 157.10 that carries crude oil, the ballast water is only carried in a cargo tank that is crude oil washed in accordance with Subpart D of this part during or after the most recent discharge of crude oil from that tank.

[CGD 77–058b, 45 FR 43708, June 30, 1980, as amended by CGD 82–28, 50 FR 11626, Mar. 22, 1985]

### § 157.37 Discharge of oily mixtures from oil cargoes.

(a) A tank vessel may not discharge an oily mixture into the sea from a cargo tank, slop tank, or cargo pump room bilge unless the vessel:

(1) Is more than 50 nautical miles from the nearest land;

(2) Is proceeding en route;

(3) Is discharging at an instantaneous rate of oil content not exceeding 30 liters per nautical mile;

(4) Is an existing vessel and the total quantity of oil discharged into the sea does not exceed 1/15,000 of the total quantity of the cargo that the discharge formed a part, or is a new vessel and the total quantity of oil discharged into the sea does not exceed 1/30,000 of the total quantity of the cargo that the discharge formed a part;

(5) Discharges:

(i) Through the above waterline discharge point described in § 157.11(b)(2);

(ii) In accordance with paragraph 5 of appendix E to this part, if the vessel is an existing vessel with a Part Flow System meeting that appendix; or

(iii) Below the waterline in accordance with paragraph (e) of this section;

(6) Has in operation an oil discharge monitoring and control system required by § 157.12 that is designed for use with the oily mixture being discharged, except that the system may be operated manually if:

(i) The automatic system fails during a ballast voyage;

(ii) The failure is recorded in the Oil Record Book;

(iii) The master ensures that the discharge is constantly monitored visually and promptly terminated when oil is detected in the discharge; and

(iv) The system is operated manually only until the ballast voyage is completed; and

(7) Is outside the ''Special Areas'' defined in Regulation 1.11 of Annex I to the MARPOL 73/78.

(b) A seagoing tank vessel of 150 gross tons or more that carries asphalt or other products whose physical properties inhibit effective product/water separation and monitoring must transfer all oil cargo residues and tank washings from such cargoes to a reception facility.

(c) Each oil discharge monitoring and control system must be maintained and operated in accordance with its instructions manual.

(d) All discharge data recorded by an oil discharge monitoring and control system must be retained for at least three years. The data for the most recent year must be retained on board the vessel.

(e) Ballast water containing an oily mixture may be discharged below the waterline at sea by gravity if—

(1) The ballast is not from a slop tank;

(2) Examination with an oil-water interface detector shows that oil-water separation has taken place; and

(3) The oil layer is high enough in the tank so that it will not be discharged.

(The information collection requirement contained in paragraph (d) of this section was approved by the Office of Management and Budget under control number 1625–0041)

[CGD 74–32, 40 FR 48283, Oct. 14, 1975, as amended by CGD 76–088b, 48 FR 45721, Oct. 6, 1983; USCG–2000–7641, 66 FR 55573, Nov. 2, 2001; USCG–2006–25150, 71 FR 39210, July 12, 2006; USCG–2008–0179, 73 FR 35015, June 19, 2008; USCG–2004–18939, 74 FR 3382, Jan. 16, 2009]

### § 157.39 Machinery space bilges.

(a) A tank vessel may discharge an oily mixture from a machinery space bilge that is combined with an oil cargo residue if the vessel discharges in compliance with § 157.37.

(b) A tank vessel may discharge an oily mixture from a machinery space bilge that is not combined with an oil cargo residue if the vessel:

(1) Is proceeding en route;

(2) Is discharging an effluent with an oil content of less than 15 parts per million; and

(3) Has in operation an oil discharge monitoring and control system in compliance with § 157.12 and oil separating equipment in compliance with 33 CFR 155.380.

[CGD 74–32, 40 FR 48283, Oct. 14, 1975, as amended by USCG–2000–7641, 66 FR 55573, Nov. 2, 2001; USCG–2004–18939, 74 FR 3382, Jan. 16, 2009]

### § 157.41 Emergencies.

Sections 157.27, 157.29, 157.37, and 157.39 do not apply to a tank vessel that discharges into the sea oil or oily mixtures:

(a) For the purpose of securing the safety of the vessel or for saving life at sea; or

(b) As a result of damage to the vessel or its equipment if:

(1) Reasonable precautions are taken after the occurrence of the damage or discovery of the discharge for the purpose of preventing or minimizing the discharge; and

(2) The owner, master or person in charge did not intend to cause damage, or did not act recklessly and with knowledge that damage of the environment would probably result.

### § 157.43 Discharges of clean and segregated ballast: Seagoing tank vessels of 150 gross tons or more.

(a) Clean ballast may not be discharged overboard unless the discharge is verified as clean ballast through use of an approved oil discharge monitoring and control system or, if discharged before the required oil discharge monitoring and control system installation date, by visual examination of the ballast contents immediately before discharge. This paragraph applies to discharges of clean ballast:

(1) From dedicated clean ballast tanks; and

(2) Into the navigable waters of the United States from any other tank.

(b) Segregated ballast may not be discharged overboard unless a visual examination, or a test of the ballast

contents with an oil/water interface detector, immediately before the discharge shows that there is no oily mixture in the ballast. Use of an oil discharge monitoring and control system is not required. This paragraph applies to discharges of segregated ballast:

(1) Into the navigable waters of the United States; and

(2) Below the waterline at sea from an existing vessel that does not have an above the waterline discharge point for segregated ballast.

(c) All discharges of clean ballast and segregated ballast must be through an above waterline discharge point described in § 157.11(b)(2), except that:

(1) A vessel may discharge clean ballast and segregated ballast below the waterline when in port or at an offshore terminal.

(2) A vessel may discharge clean ballast and segregated ballast at sea by gravity below the waterline.

(3) An existing vessel that does not have above waterline discharge points for dedicated clean ballast tanks may discharge clean ballast from those tanks below the waterline at sea.

(4) An existing vessel that does not have above waterline discharge points for segregated ballast tanks may discharge segregated ballast below the waterline at sea.

(d) This section applies only to seagoing tank vessels of 150 gross tons or more.

[CGD 76–088b, 48 FR 45721, Oct. 6, 1983; 48 FR 46985, Oct. 17, 1983; USCG–2000–7641, 66 FR 55573, Nov. 2, 2001; USCG–2004–18939, 74 FR 3382, Jan. 16, 2009]

### § 157.45 Valves in cargo or ballast piping system.

When a tank vessel is at sea and the tanks contain oil, valves and closing devices in the cargo or ballast piping system or in the transfer system must be kept closed except they may be opened for cargo or ballast transfer to trim the vessel.

### § 157.47 Information for master.

A master or person in charge of a new vessel shall operate the vessel in accordance with the information required in 46 CFR 31.10–30(d) that includes the following:

(a) Stability information.

(b) Damage stability information determined in accordance with the criteria contained in appendix B of this part.

(c) Loading and distribution of cargo information determined in compliance with the damage stability criteria required in appendix B of this part.

[CGD 74–32, 40 FR 48283, Oct. 14, 1976, as amended by CGD 75–240, 41 FR 54180, Dec. 13, 1976]

### § 157.49 Instruction manual.

The master of a tank vessel shall ensure that the instruction manual under § 157.23 is available and used when the cargo or ballast systems are operated.

## Subpart D—Crude Oil Washing (COW) System on Tank Vessels

SOURCE: CGD 77–058b, 45 FR 43709, June 30, 1980, unless otherwise noted.

GENERAL

### § 157.100 Plans for U.S. tank vessels: Submission.

(a) Before each U.S. tank vessel having a COW system under § 157.10(e), § 157.10a(a)(2), or § 157.10c(b)(2) is inspected under § 157.140, the owner or operator of that vessel must submit to the Coast Guard plans that include—

(1) A drawing or diagram of the COW pumping and piping system that meets 46 CFR 56.01–10(d);

(2) The design of each COW machine;

(3) The arrangement, location, and installation of the COW machines; and

(4) Except as allowed in § 157.104, the projected direct impingement pattern of crude oil from the nozzles of the COW machines on the surfaces of each tank, showing the surface areas not reached by direct impingement.

(b) Plans under paragraph (a) of this section must be submitted to the Officer in Charge, Marine Inspection, of the zone in which the COW system is installed or to the Commanding Officer, U.S. Coast Guard Marine Safety

Center, 2100 2nd St. SW., Stop 7102, Washington, DC 20593–7102.

(Reporting and Recordkeeping requirements approved by the Office of Management and Budget under control number 1625–0036)

[CGD 77–058b, 45 FR 43709, June 30, 1980, as amended by CGD 82–28, 50 FR 11626 and 11630, Mar. 22, 1985; CDG 85–048a, 51 FR 15481, Apr. 24, 1986; USCG–1998–3799, 63 FR 35531, June 30, 1998; USCG–2006–25150, 71 FR 39210, July 12, 2006; USCG–2008–0179, 73 FR 35015, June 19, 2008; USCG–2010–0351, 75 FR 36286, June 25, 2010]

### § 157.102 Plans for foreign tank vessels: Submission.

If the owner or operator of a foreign tank vessel having a COW system under § 157.10(e), § 157.10a(a)(2), or § 157.10c(b)(2), desires the letter from the Coast Guard under § 157.106 accepting the plans submitted under this paragraph, the owner or operator must submit to the Commandant (CG–543), U.S. Coast Guard, 2100 2nd St. SW., Stop 7581, Washington, DC 20593–7581, plans that include—

(a) A drawing or diagram of the COW pumping and piping system that meets 46 CFR 56.01–10(d);

(b) The design of each COW machine;

(c) The arrangement, location, and installation of the COW machines; and

(d) Except as allowed in § 157.104, the projected direct impingement pattern of crude oil from the nozzles of the COW machines on the surfaces of each tank, showing the surface areas not reached by direct impingement.

(Reporting and Recordkeeping requirements approved by the Office of Management and Budget under control number 1625–0036)

[CGD 77–058b, 45 FR 43709, June 30, 1980, as amended by CGD 82–28, 50 FR 11627 and 11630, Mar. 22, 1985; CGD 88–052, 53 FR 25122, July 1, 1988; CGD 96–026, 61 FR 33668, June 28, 1996; USCG–2006–25150, 71 FR 39210, July 12, 2006; USCG–2010–0351, 75 FR 36286, June 25, 2010]

### § 157.104 Scale models.

If the pattern under § 157.100(a)(4) or § 157.102(d) cannot be shown on a plan, a scale model of each tank must be built for Coast Guard inspection to simulate, by a pinpoint of light, the projected direct impingement pattern on the surfaces of the tank.

### § 157.106 Letter of acceptance.

The Coast Guard informs the submitter by letter that the plans submitted under § 157.100 or § 157.102 are accepted if:

(a) The plans submitted show that the COW system meets this subpart; or

(b) The plans submitted and the scale model under § 157.104 show that the COW system meets this subpart.

### § 157.108 Crude Oil Washing Operations and Equipment Manual for U.S. tank vessels: Submission.

Before each U.S. tank vessel having a COW system under § 157.10(e), § 157.10a(a)(2), or § 157.10c(b)(2) is inspected under § 157.140, the owner or operator of that vessel must submit two copies of a manual that meets § 157.138, to the Officer in Charge, Marine Inspection, of the zone in which the COW system is installed or to the appropriate Coast Guard field technical office listed in § 157.100(b).

(Reporting and Recordkeeping requirements approved by the Office of Management and Budget under control number 1625–0036)

[CGD 82–28, 50 FR 11627, 11630, Mar. 22, 1985, as amended by USCG–2006–25150, 71 FR 39210, July 12, 2006]

### § 157.110 Crude Oil Washing Operations and Equipment Manual for foreign tank vessels: Submission.

If the owner or operator of a foreign tank vessel having a COW system under § 157.10(e), § 157.10a(a)(2), or § 157.10c(b)(2) desires a Coast Guard approved *Crude Oil Washing Operations and Equipment Manual* under § 157.112, the owner or operator must submit two copies of a manual that meets § 157.138 to the Commandant (CG–543), U.S. Coast Guard, Washington, DC 20593–1000.

(Reporting and Recordkeeping requirements approved by the Office of Management and Budget under control number 1625–0036)

[CGD 82–28, 50 FR 11627 and 11630, Mar. 22, 1985, as amended by CGD 88–052, 53 FR 25122, July 1, 1988; CGD 96–026, 61 FR 33668, June 28, 1996; USCG–2006–25150, 71 FR 39210, July 12, 2006]

### § 157.112 Approved Crude Oil Washing Operations and Equipment Manual.

If the manuals submitted under § 157.108 or § 157.110 meet § 157.138, the

Coast Guard approves the manuals and forwards one of the approved manuals to the submitter.

### § 157.114 Crude Oil Washing Operations and Equipment Manual: Not approved.

If the manuals submitted under § 157.108 or § 157.110 are not approved, the Coast Guard forwards a letter to the submitter with the reasons why the manuals were not approved.

### § 157.116 Required documents: U.S. tank vessels.

The owner, operator, and master of a U.S. tank vessel having a COW system under § 157.10(e), § 157.10a(a)(2), or § 157.10c(b)(2) shall ensure that the vessel does not engage in a voyage unless the vessel has on board the following:

(a) The *Crude Oil Washing Operations and Equipment Manual* that—

(1) Is approved under § 157.112; or

(2) Bears a certification by an authorized CS that the manual contains the information required under § 157.138.

(b) Evidence of acceptance of the tank vessel's COW system consisting of—

(1) A document from an authorized CS that certifies the vessel meets § 157.10c(b)(2) and each amending letter by the authorized CS approving changes in the design, equipment, or installation; or

(2) The letter of acceptance under § 157.106 and each amending letter issued under § 157.158(c).

(c) Evidence that the COW system passed the required inspections by—

(1) A document from an authorized CS that the vessel has passed the inspections under § 157.140; or

(2) The letter of acceptance under § 157.142 after passing the inspection under § 157.140.

(Reporting and Recordkeeping requirements approved by the Office of Management and Budget under control number 1625–0036)

[CGD 82–28, 50 FR 11627 and 11630, Mar. 22, 1985, as amended by USCG–2006–25150, 71 FR 39210, July 12, 2006]

### § 157.118 Required documents: Foreign tank vessels.

(a) The owner, operator, and master of a foreign tank vessel under § 157.10(e) or § 157.10a(a)(2) shall ensure that the vessel does not enter the navigable waters of the United States or transfer cargo at a port or place subject to the jurisdiction of the United States unless the vessel has on board—

(1) The *Crude Oil Washing Operations and Equipment Manual* that—

(i) Is approved under § 157.112; or

(ii) Meets the manual standards in Resolution 15 of the MARPOL 73/78 and bears the approval of the government of the vessel's flag state; and

(2) Either—

(i) A document from the government of the vessel's flag state that certifies that the vessel complies with Resolution 15 of the MARPOL 73/78; or

(ii) The following letters issued by the Coast Guard:

(A) The letter of acceptance issued under § 157.106.

(B) The letter of acceptance issued under § 157.142.

(C) Each amending letter issued under § 157.158(c).

(b) On January 1, 1986, or 15 years after the date it was delivered to the original owner or 15 years after the completion of a major conversion, whichever is later, the owner, operator, and master of a foreign vessel having a COW system under § 157.10c(b)(2) shall ensure that the vessel does not enter the navigable waters of the United States or transfer cargo at a port or place subject to the jurisdiction of the United States unless the vessel has on board—

(1) The *Crude Oil Washing Operations and Equipment Manual* that—

(i) Is approved under § 157.112; or

(ii) Bears a certification by an authorized CS or the government of the vessel's flag state that the manual contains the information required under § 157.138;

(2) Evidence that the COW system passed the required inspections by—

(i) A document from an authorized CS or the government of the vessel's flag state certifying that the vessel passed the inspections under § 157.140; or

(ii) The letter of acceptance under § 157.142 after passing the inspection under § 157.140; and

(3) Either—

(i) A document from an authorized CS or the government of the vessel's flag state certifying that the vessel complies with the design, equipment and installation standards in §§ 157.122 through 157.136 and any amending letters approving changed COW system characteristics; or

(ii) The letter of acceptance under § 157.106 and any amending letters issued under § 157.158(c).

(Reporting and Recordkeeping requirements approved by the Office of Management and Budget under control number 1625–0036)

[CGD 82–28, 50 FR 11627 and 11630, Mar. 22, 1985, as amended by USCG–2000–7641, 66 FR 55573, Nov. 2, 2001; USCG–2006–25150, 71 FR 39210, July 12, 2006]

### § 157.120 Waiver of required documents.

The Coast Guard waives the requirement for the letter under § 157.116(b), if a U.S. tank vessel engages in a voyage, or under § 157.118(b)(2)(ii), if a foreign tank vessel enters the navigable waters of the United States or transfers cargo at a port or place subject to the jurisdiction of the United States, for the purpose of being inspected under § 157.140.

DESIGN, EQUIPMENT, AND INSTALLATION

### § 157.122 Piping, valves, and fittings.

(a) Except as allowed in paragraph (o) of this section, the piping, valves, and fittings of each COW system must:

(1) Meet 46 CFR part 56; and

(2) Be of steel or an equivalent material accepted by the Commandant.

(b) The piping of each COW system must be permanently installed.

(c) The piping of each COW system must be separate from other piping systems on the vessel, except that the vessel's cargo piping may be a part of the COW piping if the cargo piping meets this section.

(d) The piping of each COW system must have overpressure relief valves or other means accepted by the Commandant to prevent overpressure in the piping of the COW system, unless the maximum allowable working pressure of that system is greater than the shut-off head of each pump that meets § 157.126(b).

(e) Each overpressure relief valve must discharge into the suction side of a pump that meets § 157.126(b).

(f) The piping and equipment of a COW system may not be in machinery spaces.

(g) Each hydrant valve for water washing in the piping of a COW system must:

(1) Have adequate strength to meet 46 CFR part 56 for the working pressure for which the system is designed; and

(2) Be capable of being blanked off.

(h) Each sensing instrument must have an isolating valve at its connection to the piping of the COW system, unless the opening to that connection is 0.055 inches (1.4 millimeters) or smaller.

(i) If the washing system for cargo tanks has a steam heater used when water washing, it must be located outside the engine room and must be capable of being isolated from the piping of the COW system by:

(1) At least two shut-off valves in the inlet piping and at least two shut-off valves in the outlet piping; or

(2) Blank flanges identifiable as being closed (e.g., spectacle flanges).

(j) If the COW system has a common piping system for oil washing and water washing, that piping system must be designed to drain the crude oil into a slop tank or a cargo tank.

(k) The piping of a COW system must be securely attached to the tank vessel's structure with pipe anchors.

(l) When COW machines are used as pipe anchors, there must be other means available for anchoring the piping if these machines are removed.

(m) There must be a means to allow movement of the COW system piping as a result of thermal expansion and flexing of the tank vessel.

(n) The supply piping attached to each deck mounted COW machine and each COW machine that is audio inspected under § 157.155(a)(4)(ii) must have a shut-off valve.

(o) On combination carriers, piping of the COW system installed between each COW machine located in a cargo tank hatch cover and an adjacent location just outside the hatch coaming, may be flexible hose with flanged connections that is acceptable by the Commandant.

**§ 157.124 COW tank washing machines.**

(a) COW machines must be permanently mounted in each cargo tank.

(b) The COW machines in each tank must have sufficient nozzles with the proper diameter, working pressure, movement, and timing to allow the tank vessel to pass the inspections under § 157.140.

(c) Each COW machine and its supply piping must be supported to withstand vibration and pressure surges.

(d) There must be one portable drive unit available on board the vessel for every three COW machines that use portable drive units during COW operations required by § 157.160 before each ballast voyage.

(e) Except as allowed in paragraph (f) of this section, each cargo tank must have COW machines located to wash all horizontal and vertical areas of the tank by direct impingement, jet deflection, or splashing to allow the tank vessel to pass the inspections under § 157.140. The following areas in each tank must not be shielded from direct impingement by large primary structural members or any other structural member determined to be equivalent to a large primary structural member by the Commandant when reviewing the plans submitted under § 157.100 or § 157.102:

(1) 90 percent or more of the total horizontal area of the:

(i) Tank bottom;

(ii) Upper surfaces of large primary structural members; and

(iii) Upper surfaces of any other structural member determined to be equivalent to a large primary structural member by the Commandant.

(2) 85 percent or more of the total vertical area of the tank sides and swash bulkheads.

(f) Each cargo tank on a vessel having a COW system under § 157.10a(a)(2) or § 157.10c(b)(2) with complicated internal structural members does not have to meet paragraph (e) of this section if the following areas of each cargo tank are washed by direct impingement and the tank vessel can pass the inspections under § 157.140:

(1) 90 percent or more of the total horizontal area of all the:

(i) Tank bottoms;

(ii) Upper surfaces of large primary structural members; and

(iii) Upper surfaces of any other structural member determined to be equivalent to a large primary structural member by the Commandant.

(2) 85 percent or more of the total vertical area of all the tank sides and swash bulkheads.

(g) Each single nozzle COW machine that is mounted to the deck must have a means located outside of the cargo tank that indicates the arc and rotation of the movement of the COW machine during COW operations.

(h) Each multi-nozzle COW machine that is mounted to the deck must have a means located outside of the cargo tank that indicates the movement of the COW machine during COW operations.

(i) Each COW machine mounted to or close to the bottom of a tank without a means located outside of the cargo tank that indicates movement of the machine must not be programmable.

NOTES: 1. In the calculations to meet § 157.124 (e) or (f), areas that are shielded from direct impingement by structural members other than large primary structural members or swash bulkheads can be calculated as areas being washed by direct impingement.

2. One or more types of COW machines could be used to meet § 157.124 (e) or (f).

[CGD 77–058b, 45 FR 43709, June 30, 1980, as amended by CGD 82–28, 50 FR 11627, Mar. 22, 1985]

**§ 157.126 Pumps.**

(a) Crude oil must be supplied to the COW machines by COW system pumps or cargo pumps.

(b) The pumps under paragraph (a) of this section must be designed and arranged with sufficient capacity to meet the following:

(1) A sufficient pressure and flow is supplied to allow the simultaneous operation of those COW machines designed to operate simultaneously.

(2) If an eductor is used for tank stripping, enough driving fluid is provided by the pumps to allow the eductor to meet § 157.128(a).

(c) There must be means on the tank vessel to maintain the pressure under paragraph (b) of this section when shore terminal back pressure is less

than the pressure under paragraph (b) of this section.

(d) The COW system must have two or more pumps that are capable of supplying oil to the COW machines.

(e) The COW system must be designed to meet the requirements of this subpart with any one pump not operating.

### § 157.128 Stripping system.

(a) Each tank vessel having a COW system under § 157.10(e), § 157.10a(a)(2), or § 157.10c(b)(2) must have a stripping system that is designed to remove crude oil from—

(1) Each cargo tank at 1.25 times the rate at which all the COW machines that are designed to simultaneously wash the bottom of the tank, are operating; and

(2) The bottom of each tank to allow the tank vessel to pass the inspection under § 157.140(a)(2).

(b) Each cargo tank must be designed to allow the level of crude oil in the tank to be determined by:

(1) Hand dipping at the aftermost portion of the tank and three other locations; or

(2) Any other means accepted by the Commandant.

(c) Each stripping system must have at least one of the following devices for stripping oil from each cargo tank:

(1) A positive displacement pump.

(2) A self-priming centrifugal pump.

(3) An eductor

(4) Any other device accepted by the Commandant.

(d) There must be a means in the stripping system piping between the device under paragraph (c) of this section and each cargo tank to isolate each tank from the device.

(e) If the stripping system has a positive displacement pump or a self-priming centrifugal pump, the stripping system must have the following:

(1) In the stripping system piping:

(i) A pressure gauge at the inlet connection to the pump; and

(ii) A pressure gauge at the discharge connection to the pump.

(2) At least one of the following monitoring devices to indicate operation of the pump.

(i) Flow indicator.

(ii) Stroke counter.

(iii) Revolution counter.

(f) If the stripping system has an eductor, the stripping system must have:

(1) A pressure gauge at each driving fluid intake and at each discharge; and

(2) A pressure/vacuum gauge at each suction intake.

(g) The equipment required under paragraphs (e) and (f) of this section must have indicating devices in the cargo control room or another location that is accepted by the Commandant.

[CGD 77–058b, 45 FR 43709, June 30, 1980, as amended by CGD 82–28, 50 FR 11627, Mar. 22, 1985]

### § 157.130 Crude oil washing with more than one grade of crude oil.

If a tank vessel having a COW system under §§ 157.10(e), 157.10a(a)(2), or 157.10c(b)(2) carries more than one grade of crude oil, the COW system must be capable of washing the cargo tanks with the grades of crude oil that the vessel carries.

[CGD 82–28, 50 FR 11627, Mar. 22, 1985]

### § 157.132 Cargo tanks: Hydrocarbon vapor emissions.

Each tank vessel having a COW system under § 157.10a(a)(2) or § 157.10c(b)(2) without sufficient segregated ballast tanks or dedicated clean ballast tanks to allow the vessel to depart from any port in the United States without ballasting cargo tanks must have—

(a) A means to discharge hydrocarbon vapors from each cargo tank that is ballasted to a cargo tank that is discharging crude oil; or

(b) Any other means accepted by the Commandant that prevents hydrocarbon vapor emissions when the cargo tanks are ballasted in port.

[CGD 77–058b, 45 FR 43709, June 30, 1980, as amended by CGD 82–28, 50 FR 11628, Mar. 22, 1985]

### § 157.134 Cargo tank drainage.

Each cargo tank must be designed for longitudinal and transverse drainage of crude oil to allow the tank vessel to pass the inspections under § 157.140.

### § 157.136 Two-way voice communications.

Each tank vessel having a COW system under § 157.10(e), § 157.10a(a)(2), or

§ 157.10c(b)(2) must have a means that enables two-way voice communications between the main deck watch required under § 157.168 and each cargo discharge control station.

[CGD 82–28, 50 FR 11628, Mar. 22, 1985]

### § 157.138 Crude Oil Washing Operations and Equipment Manual.

(a) Each *Crude Oil Washing Operations and Equipment Manual* must include the following information:

(1) The text of the Annex of Resolution 15 of the MARPOL 73/78.

(2) A line drawing of the tank vessel's COW system showing the locations of pumps, piping, and COW machines.

(3) A description of the COW system.

(4) The procedure for the inspection of the COW system during COW operations.

(5) Design characteristic information of the COW system that includes the following:

(i) Pressure and flow of the crude oil pumped to the COW machines.

(ii) Revolutions, number of cycles, and length of cycles of each COW machine.

(iii) Pressure and flow of the stripping suction device.

(iv) Number and location of COW machines operating simultaneously in each cargo tank.

(6) The design oxygen content of the gas or mixture of gases that is supplied by the inert gas system to each cargo tank.

(7) The results of the inspections recorded when passing the inspections under § 157.140.

(8) Characteristics of the COW system recorded during the COW operations when passing the inspections under § 157.140 that includes the following:

(i) Pressure and flow of the crude oil pumped to the COW machines.

(ii) Revolutions, number of cycles, and length of cycles of each COW machine.

(iii) Pressure and flow of the stripping device.

(iv) Number and location of COW machines operating simultaneously in each cargo tank.

(9) The oxygen content of the gas or mixture of gases that is supplied by the inert gas system to each cargo tank recorded during COW operations when passing the inspections under § 157.140.

(10) The volume of water used for water rinsing recorded during COW operations when passing the inspections under § 157.140.

(11) The trim conditions of the tank vessel recorded during COW operations when passing the inspections under § 157.140.

(12) The procedure for stripping cargo tanks of crude oil.

(13) The procedure for draining and stripping the pumps and piping of the COW system, cargo system, and stripping system after each crude oil cargo discharge.

(14) The procedure for crude oil washing cargo tanks that includes the following:

(i) The tanks to be crude oil washed to meet § 157.160.

(ii) The order in which those tanks are washed.

(iii) The single-stage or multi-stage method of washing each tank.

(iv) The number of COW machines that operate simultaneously in each tank.

(v) The duration of the crude oil wash and water rinse.

(vi) The volume of water to be used for water rinse in each tank.

(15) The procedures and equipment needed to prevent leakage of crude oil from the COW system.

(16) The procedures and equipment needed if leakage of crude oil from the COW system occurs.

(17) The procedures for testing and inspecting the COW system for leakage of crude oil before operating the system.

(18) The procedures and equipment needed to prevent leakage of crude oil from the steam heater under § 157.122(i) to the engine room.

(19) The number of crew members needed to conduct the following:

(i) The discharge of cargo.

(ii) The crude oil washing of cargo tanks.

(iii) The simultaneous operations in paragraphs (a)(19) (i) and (ii) of this section.

(20) A description of the duties of each crew member under paragraph (a)(19) of this section.

(21) The procedures for ballasting and deballasting cargo tanks.

(22) The step by step procedure for the inspection of the COW system by vessel personnel before COW operations begin that includes the procedure for inspecting and calibrating each instrument. (Operational Checklist)

(23) The intervals for on board inspection and maintenance of the COW equipment. Informational references to technical manuals supplied by the manufacturers may be included in this part of the manual.

(24) A list of crude oils that are not to be used in COW operations.

(25) The procedure to meet § 157.155(a)(4).

(b) In addition to meeting paragraph (a) of this section, each *Crude Oil Washing Operations and Equipment Manual* on a tank vessel having a COW system under § 157.10a(a)(2) or § 157.10c(b)(2) must include the following:

(1) The procedure to meet § 157.166.

(2) The procedures to meet § 157.155(b).

[CGD 77–058b, 45 FR 43709, June 30, 1980, as amended by CGD 82–28, 50 FR 11628, Mar. 22, 1985; USCG–2000–7641, 66 FR 55573, Nov. 2, 2001]

INSPECTIONS

### § 157.140 Tank vessel inspections.

(a) Before issuing a letter under § 157.142, the Coast Guard makes an initial inspection of each U.S. tank vessel having a COW system under § 157.10(e), § 157.10(a)(2), or § 157.10c(b)(2) and each foreign tank vessel whose owner or operator submitted the plans under § 157.102 to determine whether or not, when entering a port, the cargo tanks that carry crude oil meet the following:

(1) After each tank is crude oil washed but not water rinsed, except the bottom of the tank may be flushed with water and stripped, each tank is essentially free of oil residues to a degree acceptable to the Coast Guard inspector.

(2) After the tanks that are to be used as ballast tanks when leaving the port are crude oil washed and stripped but not water rinsed or bottom flushed, they are filled with water and the total volume of crude oil floating on top of the water in these tanks is 0.085 percent or less of the total volume of these tanks.

(b) Except on a tank vessel under § 157.10(e), if the initial inspection under paragraph (a) of this section has been passed and the vessel arrives at the first cargo loading port after completing a ballast voyage, the Coast Guard monitors the discharge of effluent from those tanks that have been crude oil washed, water rinsed, stripped, and filled with ballast water to determine whether or not the oil content of the effluent is 15 ppm or less.

[CGD 77–058b, 45 FR 43709, June 30, 1980, as amended by CGD 82–28, 50 FR 11628, Mar. 22, 1985; USCG–2000–7641, 66 FR 55573, Nov. 2, 2001]

### § 157.142 Letter of acceptance: Inspections.

If the inspections under § 157.140 are passed, the Coast Guard issues to the tank vessel a letter that states that the vessel complies with this subpart.

### § 157.144 Tank vessels of the same class: Inspections.

(a) If more than one tank vessel is constructed from the same plans, the owner or operator may submit a written request to the Commandant (CG–543), U.S. Coast Guard, 2100 2nd St. SW., Stop 7581, Washington, DC 20593–7581, for only one of those tank vessels to be inspected under § 157.140.

(b) Only one tank vessel of the class is inspected under § 157.140, if the Commandant accepts the request submitted under paragraph (a) of this section.

[CGD 77–058b, 45 FR 43709, June 30, 1980, as amended by CGD 82–28, 50 FR 11630, Mar. 22, 1985; CGD 88–052, 53 FR 25122, July 1, 1988; CGD 96–026, 61 FR 33668, June 28, 1996; USCG–2010–0351, 75 FR 36286, June 25, 2010]

### § 157.146 Similar tank design: Inspections on U.S. tank vessels.

(a) If a U.S. tank vessel has tanks similar in dimensions and internal structure, the owner or operator may submit a written request to the Officer in Charge, Marine Inspection, of the zone in which the COW system is inspected, for only one of those tanks to be inspected under § 157.140(a)(1).

(b) Only one tank of a group of tanks similar in dimensions and internal structure is inspected under § 157.140(a)(1), if the Officer in Charge, Marine Inspection, accepts the request submitted under paragraph (a) of this section.

### § 157.147 Similar tank design: Inspections on foreign tank vessels.

(a) If a foreign tank vessel has tanks similar in dimensions and internal structure, the owner or operator may submit a written request to the Commandant (CG–543), U.S. Coast Guard, 2100 2nd St. SW., Stop 7581, Washington, DC 20593–7581, for only one of those tanks to be inspected under § 157.140(a)(1).

(b) Only one tank of a group of tanks similar in dimensions and internal structure is inspected under § 157.140(a)(1), if the Commandant accepts the request submitted under paragraph (a) of this section.

[CGD 77–058b, 45 FR 43709, June 30, 1980, as amended by CGD 82–28, 50 FR 11630, Mar. 22, 1985; CGD 88–052, 53 FR 25122, July 1, 1988; CGD 96–026, 61 FR 33668, June 28, 1996; USCG–2010–0351, 75 FR 36286, June 25, 2010]

### § 157.148 COW system: Evidence for inspections.

(a) Before the inspections under § 157.140 are conducted by the Coast Guard, the owner or operator of a foreign tank vessel that is to be inspected must submit to the Coast Guard inspector evidence that the COW system has been installed in accordance with the plans accepted under § 157.106.

(b) Before the inspections under § 157.140 are conducted by the Coast Guard, the owner or operator of a tank vessel that is to be inspected must submit to the Coast Guard inspector evidence that the COW piping system has passed a test of 1½ times the design working pressure.

### § 157.150 Crude Oil Washing Operations and Equipment Manual: Recording information after inspections.

After passing the inspections under § 157.140, the owner, operator, and master shall ensure that the following are recorded in the *Crude Oil Washing Operations and Equipment Manual* approved under § 157.112:

(a) The results of the inspections under § 157.140.

(b) The following characteristics used to pass the inspections under § 157.140:

(1) Pressure and flow of the crude oil pumped to the COW machines.

(2) Revolutions, number of cycles, and length of cycles of each COW machine.

(3) Pressure and flow of the stripping suction device.

(4) Number and location of COW machines operating simultaneously in each cargo tank.

(5) Volume of water used for water rinsing.

(6) Trim conditions of the tank vessel.

## PERSONNEL

### § 157.152 Person in charge of COW operations.

The owner, operator, and master of a tank vessel having a COW system under § 157.10(e), § 157.10(a)(2), or § 157.10c(b)(2) shall ensure that the person designated as the person in charge of COW operations—

(a) Knows the contents in the *Crude Oil Washing Operations and Equipment Manual* approved by the Coast Guard under § 157.112 or by the government of the vessel's flag state;

(b) On at least two occasions, has participated in crude oil washing of cargo tanks, one of those occasions occurring on:

(1) The tank vessel on which the person assumes duties as the person in charge of COW operations; or

(2) A tank vessel that is similar in tank design and which has COW equipment similar to that used on the tank vessel on which the person assumes duties as the person in charge of COW operations; and

(c) Has one year or more of tank vessel duty that includes oil cargo discharge operations and:

(1) Crude oil washing of cargo tanks; or

(2) Has completed a training program in crude oil washing operations that is approved by the Coast Guard or the government of the vessel's flag state.

NOTE: Standards of a Coast Guard approved training program are to be developed.

[CGD 77–058b, 45 FR 43709, June 30, 1980, as amended by CGD 82–28, 50 FR 11628, Mar. 22, 1985]

### § 157.154 Assistant personnel.

The owner, operator, and master of a tank vessel having a COW system under § 157.10(e), § 157.10a(a)(2), or § 157.10c(b)(2) shall ensure that each member of the crew that has a designated responsibility during COW operations—

(a) Has six months or more of tank vessel duty that includes oil cargo discharge operations;

(b) Has been instructed in the COW operation of the tank vessel; and

(c) Is familiar with the contents of the *Crude Oil Washing Operations and Equipment Manual* approved by the Coast Guard under § 157.112 or by the government of the vessel's flag state.

[CGD 77–058b, 45 FR 43709, June 30, 1980, as amended by CGD 82–28, 50 FR 11628, Mar. 22, 1985]

COW OPERATIONS

### § 157.155 COW operations: General.

(a) The master of a tank vessel having a COW system under § 157.10(e), § 157.10a(a)(2), or 157.10c(b)(2) shall ensure that—

(1) Before crude oil washing a cargo tank, the level in each tank with crude oil that is used as a source for crude oil washing is lowered at least one meter;

(2) A tank used as a slop tank is not used as a source for crude oil washing until:

(i) Its contents are discharged ashore or to another tank; and

(ii) The tank contains only crude oil;

(3) During COW operations:

(i) The valves under § 157.122(i)(1) are shut; or

(ii) The blanks under § 157.122(i)(2) are installed;

(4) The rotation of each COW machine mounted to or close to the bottom of each cargo tank is verified by:

(i) A visual inspection of a means located outside of the cargo tank that indicates movement of the machine during COW operations;

(ii) An audio inspection during COW operations; or

(iii) An inspection on a ballast voyage, with water as the fluid flowing through the machine;

(5) During the audio inspection under paragraph (a)(4)(ii) of this section, the COW machine being inspected is the only one operating in that tank;

(6) Before the inspection under paragraph (a)(4)(iii) of this section, the tank that has the COW machine being inspected in it, is gas freed;

(7) Each COW machine that is inspected under paragraph (a)(4)(iii) of this section is inspected at least once after every sixth COW operation of that machine, but no less that once every 12 months;

(8) After each stripping operation is completed, each tank:

(i) Is sounded by a means under § 157.128(b); and

(ii) Contains no oil except a minimal quantity near the stripping suction;

(9) Before the tank vessel begins each ballast voyage, each cargo tank and each cargo main, stripping, and COW piping is stripped of crude oil and the strippings are conveyed ashore through the piping under §§ 157.11(d)(3) or 157.11(e)(4);

(10) Before water washing the cargo tanks, the piping of the COW system is drained of crude oil;

(11) When the cargo tanks are not being water washed, the hydrant valves under § 157.122(g) are blanked off;

(12) If COW machines that are used as anchors for the piping of the COW system are removed, the means available under § 157.122(l) for anchoring the piping are installed;

(13) The fire main is not connected to the COW system; and

(14) On combination carriers, if flexible hoses under § 157.122(o) are used, those hoses are protectively stowed when not installed in the COW piping system.

(b) In addition to meeting paragraph (a) of this section, the master of a tank vessel having a COW system under § 157.10a(a)(2) or § 157.10c(b)(2) shall ensure that—

(1) Before ballasting cargo tanks upon leaving a port, each cargo pump, manifold, and piping that is used for ballasting the cargo tanks is drained of all crude oil; and

(2) Before ballasting or deballasting cargo tanks, except when ballasting cargo tanks to leave a port, the cargo piping that is used for ballasting or deballasting the cargo tanks is water washed.

[CGD 77–058b, 45 FR 43709, June 30, 1980, as amended by CGD 82–28, 50 FR 11628, Mar. 22, 1985]

### § 157.156 COW operations: Meeting manual requirements.

Except as allowed in § 157.158, the master of a foreign tank vessel having a COW system under §§ 157.10(e), 157.10a(a)(2), or 157.10c(b)(2) that has the *Crude Oil Washing Operations and Equipment Manual* approved under § 157.112 and is operating in the navigable waters of the United States or transferring cargo at a port or place subject to the jurisdiction of the United States and the master of a U.S. tank vessel having a COW system under § 157.10(e), § 157.10a(a)(2), or § 157.10c(b)(2) shall ensure that during each COW operation—

(a) The procedures listed in the *Crude Oil Washing Operations and Equipment Manual* are followed; and

(b) The characteristics recorded in the *Crude Oil Washing Operations and Equipment Manual* under § 157.150(b) are met.

[CGD 77–058b, 45 FR 43709, June 30, 1980, as amended by CGD 82–28, 50 FR 11628, Mar. 22, 1985]

### § 157.158 COW operations: Changed characteristics.

The COW system may be operated with characteristics that do not meet those recorded under § 157.150(b) only if:

(a) The tank vessel passes the inspections under § 157.140 using the changed characteristics;

(b) The changed characteristics used to pass the inspections under § 157.140 are recorded in the *Crude Oil Washing Operations and Equipment Manual* approved under § 157.112; and

(c) The Coast Guard issues to the tank vessel an amending letter stating that the tank vessel complies with this subpart with these characteristics.

### § 157.160 Tanks: Ballasting and crude oil washing.

(a) The owner, operator, and master of a tank vessel under § 157.10(e) shall ensure that:

(1) Ballast water is carried in a cargo tank only as allowed under § 157.35;

(2) For oil cargo residue control, at least 25 percent of the cargo tanks are crude oil washed before each ballast voyage and that each cargo tank is crude oil washed at least once every fourth time crude oil is discharged from the tank, but no tank need be crude oil washed more than once during each 120 day period;

(3) Ballast water in a cargo tank that is crude oil washed but not water rinsed during or after the most recent discharge of crude oil from that tank is discharged in accordance with § 157.37(a); and

(4) Cargo tanks are not crude oil washed during a ballast voyage.

(b) The owner, operator, and master of a tank vessel having a COW system under § 157.10a(a)(2) or § 157.10c(b)(2) shall ensure that—

(1) Ballast water is carried only in a cargo tank that is crude oil washed during or after the most recent discharge of crude oil from that tank;

(2) Before each ballast voyage a sufficient number of cargo tanks have been crude oil washed during or after the most recent discharge of crude oil from those tanks to allow ballast water to be carried in cargo tanks:

(i) With a total capacity to meet the draft and trim requirements in § 157.10a(d); and

(ii) For the vessel's trading pattern and expected weather conditions;

(3) For oil cargo residue control, at least 25 percent of the cargo tanks not used for carrying ballast water under paragraph (b)(2)(i) of this section are crude oil washed before each ballast voyage, and that each cargo tank is crude oil washed at least once every fourth time crude oil is discharged from the tank, but no tank need be crude oil washed more than once during each 120 day period;

(4) Cargo tanks are not crude oil washed during a ballast voyage; and

(5) Ballast water in a cargo tank that is crude oil washed but not water rinsed during or after the most recent

discharge of crude oil from that tank is discharged in accordance with § 157.37(a).

[CGD 77–058b, 45 FR 43709, June 30, 1980, as amended by CGD 82–28, 50 FR 11628, Mar. 22, 1985; USCG–2000–7641, 66 FR 55573, Nov. 2, 2001]

### § 157.162 Crude oil washing during a voyage.

The master of a tank vessel having a COW system under § 157.10(e), § 157.10a(a)(2), or § 157.10c(b)(2) shall ensure that each cargo tank that is crude oil washed during a voyage other than a ballast voyage—

(a) Remains empty so that the tank may be inspected upon arrival at the next discharge port; and

(b) If it is to be used as a ballast tank when leaving the discharge port, is ballasted before the vessel departs from that discharge port so that the tank may be inspected under § 157.140(a)(2).

[CGD 77–058b, 45 FR 43709, June 30, 1980, as amended by CGD 82–28, 50 FR 11628, Mar. 22, 1985]

### § 157.164 Use of inert gas system.

(a) The master of a tank vessel having a COW system under § 157.10(e), § 157.10a(a)(2), or § 157.10c(b)(2) shall ensure the following:

(1) Before each cargo tank is crude oil washed, the oxygen content in the tank is measured at each of the following locations in the tank:

(i) One meter from the deck.

(ii) In the center of the ullage space.

(2) Before each cargo tank with partial bulkheads is crude oil washed, each area of that tank formed by each partial bulkhead is measured in accordance with paragraph (a)(1) of this section.

(3) Before each cargo tank is crude oil washed, the oxygen content in that tank is 8 percent or less by volume at the locations under paragraph (a)(1) of this section.

(4) During COW operations, the following are maintained in each cargo tank being crude oil washed:

(i) A gas or a mixture of gases with an oxygen content of 8 percent or less by volume.

(ii) A positive atmospheric pressure.

(5) During COW operations, a crew member monitors the instrumentation under 46 CFR 32.53–60(a)(1), except if that instrumentation has an alarm that sounds in the cargo control room when the oxygen content exceeds 8 percent by volume.

(b) Crude oil washing of the cargo tanks must be terminated when paragraph (a)(4) of this section is not met and crude oil washing of that tank may not be resumed until the requirements of paragraph (a)(4) of this section are met.

[CGD 77–058b, 45 FR 43709, June 30, 1980, as amended by CGD 82–28, 50 FR 11628, Mar. 22, 1985]

### § 157.166 Hydrocarbon emissions.

If the tank vessel having a COW system under § 157.10a(a)(2) or § 157.10c(b)(2) transfers cargo at a port in the United States that is in an area designated in 40 CFR part 81 as an area that does not meet the national primary ambient air quality ozone standard under 40 CFR part 50, issued under the Clean Air Act, as amended (42 U.S.C. 1857), the master of the vessel shall ensure that when cargo tanks are ballasted in that port the hydrocarbon vapors in each tank are contained by a means under § 157.132.

NOTE: Questions relating to whether or not a particular port is located in an area designated in 40 CFR part 81 as an area that does not meet the national primary ambient air quality standard under 40 CFR part 50 should be directed to the Plans Analysis Section of the Environmental Protection Agency at (919) 541–5665.

[CGD 82–28, 50 FR 11628, Mar. 22, 1985]

### § 157.168 Crew member: Main deck watch.

During COW operations, the master shall ensure that at least one member of the crew with a designated responsibility for monitoring COW operations is on the main deck at all times.

### § 157.170 COW equipment: Removal.

(a) Whenever a deck mounted COW machine is removed from the tank, the master shall ensure that:

(1) The supply piping to that machine is blanked off; and

(2) The tank opening is sealed by a secured plate made of steel or an equivalent material accepted by the Commandant.

(b) If the equipment for the COW system is removed from a cargo tank for the carriage of cargoes other than crude oil and then reinstalled, the master shall ensure that, before COW operations are conducted, the system has no crude oil leakage.

### § 157.172 Limitations on grades of crude oil carried.

If a tank vessel having a COW system meeting § 157.10a(a)(2) or § 157.10c(b)(2) does not have segregated ballast tanks or dedicated clean ballast tanks that meet § 157.10c(c)(2), the owner, operator, and master shall ensure that the vessel carries only the grades of crude oil that can be used for crude oil washing.

[CGD 82–28, 50 FR 11628, Mar. 22, 1985]

## Subpart E—Dedicated Clean Ballast Tanks on Tank Vessels

SOURCE: CGD 77–058b, 45 FR 43714, June 30, 1980, unless otherwise noted.

GENERAL

### § 157.200 Plans for U.S. tank vessels: Submission.

(a) Before modifications are made to a U.S. vessel to meet § 157.10a(b), § 157.10b(a)(2), § 157.10a(c)(2), or § 157.10c(c)(2), the owner or operator must submit to the Coast Guard plans or documents that include the following:

(1) The dedicated clean ballast tank arrangement.

(2) Documentation, calculations, or revised stability information to show that the vessel, with the addition of the dedicated clean ballast tanks, meets the stability standards for load line assignment in 46 CFR part 42.

(3) Documentation, calculations, or a loading manual to show that the vessel, with the addition of the dedicated clean ballast tanks, meets the structural standards in 46 CFR part 32.

(4) A drawing or diagram of the pumping and piping system for the dedicated clean ballast tanks.

(b) Plans under paragraph (a) of this section must be submitted to the Officer in Charge, Marine Inspection, of the zone in which the dedicated clean ballast tank system is installed or to the Commanding Officer, U.S. Coast Guard Marine Safety Center, 2100 2nd St. SW., Stop 7102, Washington, DC 20593–7102.

(Reporting and Recordkeeping requirements approved by the Office of Management and Budget under control number 1625–0036)

[CGD 77–058b, 45 FR 43714, June 30, 1980, as amended by CGD 79–152, 45 FR 82250, Dec. 15, 1980; CGD 82–28, 50 FR 11628, and 11630, Mar. 22, 1985; CGD 85–048a, 51 FR 15481, Apr. 24, 1986; USCG–1998–3799, 63 FR 35531, June 30, 1998; USCG–2006–25150, 71 FR 39210, July 12, 2006; USCG–2008–0179, 73 FR 35015, June 19, 2008; USCG–2010–0351, 75 FR 36286, June 25, 2010]

### § 157.202 Plans and documents for foreign tank vessels: Submission.

The owner or operator of a foreign tank vessel under § 150.10a(b), § 157.10a(c)(2), or § 157.10b(a)(2) who desires the letter from the Coast Guard under § 157.204 accepting the plans submitted under this paragraph, and the owner or operator of a foreign tank vessel under § 150.10c(c)(2) must submit to the Commandant (CG–543), U.S. Coast Guard, Washington, D.C. 20593–0001—

(a) Plans that include:

(1) The dedicated clean ballast tank arrangement; and

(2) A drawing or diagram of the pumping and piping system for the dedicated clean ballast tanks; and

(b) Documentation from the authority that assigned the load line to the tank vessel that states that the location of the dedicated clean ballast tanks is acceptable to that authority.

[CGD 77–058b, 45 FR 43714, June 30, 1980, as amended by CGD 82–28, 50 FR 11629, Mar. 22, 1985; CGD 88–052, 53 FR 25122, July 1, 1988; CGD 96–026, 61 FR 33668, June 28, 1996]

### § 157.204 Letter of acceptance.

The Coast Guard informs the submitter by letter that the plans submitted under § 157.200 or the plans and documents submitted under § 157.202 are accepted, if the plans submitted under § 157.200 or the plans and documents submitted under § 157.202 show

that the dedicated clean ballast tank system meets this subpart.

### § 157.206 Dedicated Clean Ballast Tanks Operations Manual for U.S. tank vessels: Submission.

The owner or operator of a U.S. tank vessel meeting § 157.10a(b), § 157.10a(c)(2), § 157.10b(a)(2), or § 157.10c(c)(2) must submit two copies of a manual that meets § 157.224 to the Officer in Charge, Marine Inspection, of the zone in which the dedicated clean ballast tank system is installed or to the appropriate Coast Guard field technical office listed in § 157.200(b).

(Reporting and Recordkeeping requirements approved by the Office of Management and Budget under control number 1625–0036)

[CGD 82–28, 50 FR 11629, and 11630, Mar. 22, 1985, as amended by USCG–2006–25150, 71 FR 39210, July 12, 2006]

### § 157.208 Dedicated Clean Ballast Tanks Operations Manual for foreign tank vessels: Submission.

If the owner or operator of a foreign tank vessel meeting § 157.10a(b), § 157.10a(c)(2), § 157.10b(a)(2), or § 157.10c(c)(2) desires a Coast Guard approved *Dedicated Clean Ballast Tanks Operations Manual* under § 157.210, the owner or operator must submit two copies of a manual that meets § 157.224 to the Commandant (CG–543), U.S. Coast Guard, 2100 2nd St. SW., Stop 7581, Washington, DC 20593–7581.

(Reporting and Recordkeeping requirements approved by the Office of Management and Budget under control number 1625–0036)

[CGD 82–28, 50 FR 11629, and 11630, Mar. 22, 1985, as amended by CGD 88–052, 53 FR 25122, July 1, 1988; CGD 96–026, 61 FR 33668, June 28, 1996; USCG–2006–25150, 71 FR 39210, July 12, 2006; USCG–2010–0351, 75 FR 36286, June 25, 2010]

### § 157.210 Approved Dedicated Clean Ballast Tanks Operations Manual.

If the manuals submitted under § 157.206 or § 157.208 meet § 157.224, the Coast Guard approves the manuals and forwards one of the approved manuals to the submitter.

### § 157.212 Dedicated Clean Ballast Tanks Operations Manual: Not approved.

If the *Dedicated Clean Ballast Tanks Operations Manual* submitted under § 157.206 or § 157.208 is not approved, the Coast Guard forwards a letter to the submitter with the reasons why the manual was not approved.

### § 157.214 Required documents: U.S. tank vessels.

The owner, operator, and master of a U.S. tank vessel meeting § 157.10a(b), § 157.10a(c)(2), § 157.10b(a)(2), or § 157.10c(c)(2) shall ensure that the vessel does not engage in a voyage unless the vessel has on board—

(a) The letter under § 157.204 accepting the dedicated clean ballast tank system plans;

(b) The Coast Guard approved *Dedicated Clean Ballast Tanks Operations Manual* under § 157.210; and

(c) Any amending letters issued under § 157.218 approving alterations.

(Reporting and Recordkeeping requirements approved by the Office of Management and Budget under control number 1625–0036)

[CGD 77–058b, 45 FR 43714, June 30, 1980, as amended by CGD 82–28, 50 FR 11629, and 11630, Mar. 22, 1985; USCG–2006–25150, 71 FR 39211, July 12, 2006]

### § 157.216 Required documents: Foreign tank vessels.

(a) The owner, operator, and master of a foreign tank vessel meeting § 157.10a(b), § 157.10a(c)(2), § 157.10b(a)(2), or § 157.10c(c)(2) shall ensure that the vessel does not enter the navigable waters of the United States or transfer cargo at a port or place subject to the jurisdiction of the United States unless the vessel has on board—

(1) The *Dedicated Clean Ballast Tank Operations Manual* that—

(i) Is approved under § 157.210; or

(ii) Is certified by the government of the vessel's flag state because it meets the manual standards in Resolution 14 of the MARPOL 73/78; and

(2) Either of the following:

(i) A letter from the government of the vessel's flag state that certifies that the vessel complies with Resolution 14 of the MARPOL 73/78.

(ii) The letter of acceptance under § 157.204 and each amending letter issued under § 157.218(c).

(b) On January 1, 1986, or 15 years after the date it was delivered to the original owner or 15 years after the completion of a major conversion, whichever is later, the owner, operator, and master of a foreign tank vessel under § 157.10c(c)(2) shall ensure that the vessel does not enter the navigable waters of the United States or transfer cargo at a port or place subject to the jurisdiction of the United States unless the vessel has on board—

(1) The *Dedicated Clean Ballast Tank Operations Manual* that—

(i) Is approved under § 157.210; or

(ii) Bears a certification by an authorized CS or the government of the vessel's flag state that the manual meets § 157.224; and

(2) Either of the following:

(i) A letter from an authorized CS or the government of the vessel's flag state certifying the vessel complies with §§ 157.220 and 157.222, and any amending letters issued approviding alterations.

(ii) The letter of acceptance under § 157.204 and each amending letter issued under § 157.218.

(Reporting and Recordkeeping requirements approved by the Office of Management and Budget under control number 1625–0036)

[CGD 82–28, 50 FR 11629, and 11630, Mar. 22, 1985; USCG–2000–7641, 66 FR 55573, Nov. 2, 2001; USCG–2006–25150, 71 FR 39211, July 12, 2006]

### § 157.218 Dedicated clean ballast tanks: Alterations.

The dedicated clean ballast tanks or equipment on a tank vessel that has a letter issued under § 157.204 may not be altered so that they no longer meet the plans accepted under that section unless:

(a) The owner or operator of that vessel submits plans that show the alterations to the Coast Guard official to which the plans were submitted under § 157.200 or § 157.202;

(b) The owner or operator of that vessel submits changes to the manual under § 157.224 that show and describe the alterations to the Coast Guard official to which the manuals were submitted under § 157.206 or § 157.208; and

(c) The Coast Guard issues to the tank vessel an amending letter stating that the vessel, as altered, complies with this subpart.

DESIGN AND EQUIPMENT

### § 157.220 Dedicated clean ballast tanks: Standards.

(a) Cargo tanks that are designated as dedicated clean ballast tanks must allow the tank vessel to meet the draft and trim requirements under §§ 157.10a(d) and 157.10b(b).

(b) Each tank under paragraph (a) of this section must be:

(1) A wing tank; or

(2) Any other tank that is accepted by the Commandant.

[CGD 77–058b, 45 FR 43714, June 30, 1980, as amended by CGD 79–152, 45 FR 82250, Dec. 15, 1980]

### § 157.222 Pump and piping arrangements.

(a) Dedicated clean ballast tanks must be connected to the least practicable:

(1) Number of pumps; and

(2) Amount of piping.

(b) Each piping system that is arranged to convey clean ballast and cargo must be designed to be flushed to the slop tank with water.

(c) The piping system of each dedicated clean ballast tank must be arranged so that oily water does not enter any dedicated clean ballast tank when the piping system is flushed.

(d) The piping system of each dedicated clean ballast tank must have at least two valves that isolate that tank from each cargo tank.

(e) The piping system of the dedicated clean ballast tanks must have a sample point that is located in a vertical section of discharge piping.

NOTE: An example of a sample point is shown in 46 CFR Figure 162.050–17(e).

### § 157.224 Dedicated Clean Ballast Tanks Operations Manual.

Each *Dedicated Clean Ballast Tanks Operations Manual* must include the following information:

(a) The text of the Annex of Resolution 14 of the MARPOL 73/78.

(b) A description of the dedicated clean ballast tanks system.

(c) A procedure for dedicated clean ballast tanks operations.

NOTE: Appendix D is an example of such a procedure.

[CGD 77–058b, 45 FR 43714, June 30, 1980, as amended by USCG–2000–7641, 66 FR 55573, Nov. 2, 2001]

DEDICATED CLEAN BALLAST TANKS OPERATIONS

### § 157.225 Dedicated clean ballast tanks operations: General.

The master of a tank vessel meeting § 157.10a(b), § 157.10a(c)(2), § 157.10b(a)(2), or § 157.10c(c)(2) shall ensure that—

(a) Before clean ballast in any dedicated clean ballast tank is discharged or transferred, the pump and piping system for conveying the clean ballast are flushed with water;

(b) Before any dedicated clean ballast tank is ballasted, the pump and piping system for conveying the ballast are flushed with water;

(c) Before the pump and piping system of the dedicated clean ballast tanks are used for cargo transfer:

(1) If water in the dedicated clean ballast tanks is used for flushing the pump and piping system, the volume of water for flushing is equal to at least 10 times the volume of the piping to be flushed;

(2) The piping system is drained of fluid; and

(3) The valves under § 157.222(d) are closed;

(d) Flushing water is pumped from a sea chest or a dedicated clean ballast tank through the pump and piping system of the dedicated clean ballast tanks and then to a slop tank;

(e) Clean ballast from each dedicated clean ballast tank is discharged in accordance with § 157.43;

(f) When the pump and piping system are being flushed:

(1) The oil content of the flushing water in the piping system is monitored; and

(2) The pump and piping system are flushed until the oil content of the flushing water in the piping stabilizes; and

(g) If any pump or piping system that is flushed to meet paragraph (f) of this section is used to convey cargo during an emergency, that pump or piping system is flushed again to meet paragraph (f) of this section before being used to convey clean ballast.

[CGD 77–058b, 45 FR 43714, June 30, 1980, as amended by CGD 82–28, 50 FR 11629, Mar. 22, 1985]

### § 157.226 Dedicated Clean Ballast Tanks Operations Manual: Procedures to be followed.

The master of a foreign tank vessel meeting § 157.10a(b), § 157.10a(c)(2), § 157.10b(a)(2), or § 157.10c(c)(2) that has the *Dedicated Clean Ballast Tanks Operations Manual* approved under § 157.210 and is operating in the navigable waters of the United States or transferring cargo at a port or place subject to the jurisdiction of the United States and the master of a U.S. tank vessel meeting § 157.10a(b), § 157.10a(c)(2), § 157.10b(a), or § 157.10c(c)(1) shall ensure that the procedure listed in the *Dedicated Clean Ballast Tanks Operations Manual* are followed.

[CGD 82–28, 50 FR 11629, Mar. 22, 1985]

### § 157.228 Isolating Valves: Closed during a voyage.

(a) The master of each U.S. tank vessel under § 157.10a(b), § 157.10a(c)(2), § 157.10b(a)(2), or § 157.10c(c)(2) shall ensure that the valves under § 157.222(d) remain closed during each voyage.

(b) The master of each foreign tank vessel meeting § 157.10a(b), § 157.10a(c)(2), § 157.10b(a)(2), or § 157.10c(c)(2) shall ensure that the valves under § 157.222(d) remain closed when the vessel is on a voyage in the navigable waters of the United States.

[CGD 82–28, 50 FR 11629, Mar. 22, 1985]

## Subpart F—Exemption From § 157.10a or § 157.10c

SOURCE: CGD 79–126, 46 FR 3513, Jan. 15, 1981, unless otherwise noted.

### § 157.300 Qualifications for exemptions under this part.

(a) Each vessel under § 157.10a or § 157.10c of this part may qualify for an exemption from the requirements of § 157.10a or § 157.10c of this part if—

(1) The vessel loads and discharges cargo only at ports or places within the

United States, its territories, or its possessions; and

(2) The application for exemption meets § 157.302.

(b) Except where the owner can show good cause, a vessel is not granted an exemption under this subpart if a previous exemption for the vessel has been revoked by the Coast Guard under § 157.308(a)(1) or § 157.308 (a)(2).

[CGD 79–126, 46 FR 3513, Jan. 15, 1981, as amended by CGD 82–28, 50 FR 11630, Mar. 22, 1985]

### § 157.302 Applying for an exemption or requesting modification of an exemption.

(a) Each application for an exemption or modification must be in writing and submitted to the Commandant (CG–543), U.S. Coast Guard, 2100 2nd St. SW., Stop 7581, Washington, DC 20593–7581.

(b) Each application for exemption must include the following: (1) The name and official number of the vessel for which the exemption is requested.

(2) A list of each port or place where the vessel would load cargo.

(3) The name, address, and telephone number for each shore-based reception facility at each port listed under paragraph (b)(2) of this section where the vessel would discharge its ballast water and oil cargo residues, including:

(i) The name or title of the person at each facility who should be contacted for information concerning the operation of the reception facility; and

(ii) A statement from the facility owner disclosing whether or not, based on current operating conditions, the facility has the capability of processing the anticipated volume and type of discharges from the vessel without adversely affecting the service of the facility to current users.

(4) The number of the permit under the National Pollutant Discharge Elimination System (NPDES permit) issued to each listed shore-based reception facility.

(5) A list of each type of oil cargo that the vessel would load.

(6) A description of the method by which the vessel would discharge ballast water and oil cargo residues to each listed shore based reception facility.

(c) Each request for modification to an exemption must include the following:

(1) The name and official number of the vessel for which the modification to the exemption is requested.

(2) The reason for requesting modification of the exemption.

(3) Any additional information which is pertinent to the modification.

[CGD 79–126, 46 FR 3513, Jan. 15, 1981, as amended by CGD 82–28, 50 FR 11630, Mar. 22, 1985; CGD 88–052, 53 FR 25122, July 1, 1988; CGD 96–026, 61 FR 33668, June 28, 1996; USCG–2000–7641, 66 FR 55573, Nov. 2, 2001; USCG–2010–0351, 75 FR 36286, June 25, 2010]

### § 157.304 Shore-based reception facility: standards.

No shore-based reception facility may be listed to meet § 157.302(b)(3) unless that reception facility has:

(a) A valid NPDES permit which allows it to process the ballast water and oil cargo residues of the vessel for which the exemption is being requested; and

(b) The capacity to receive and store a volume of dirty ballast water equivalent to 30 percent of the deadweight, less the segregated ballast volume, of the vessel for which the exemption is being requested.

[CGD 79–126, 46 FR 3513, Jan. 15, 1981, as amended by USCG–2000–7641, 66 FR 55573, Nov. 2, 2001]

### § 157.306 Granting, denying, or modifying an exemption.

(a) The Assistant Commandant for Marine Safety, Security and Environmental Protection issues a written decision concerning the grant or denial of each exemption or modification requested under § 157.302.

(b) If the exemption or request for modification is denied, the decision under paragraph (a) of this section includes the reasons for the denial.

(c) Any person directly affected by, and not satisfied with, a decision made under paragraph (a) of this section may appeal that decision, in writing, to the Commandant (CG–543), U.S Coast Guard, 2100 2nd St. SW., Stop 7581, Washington, DC 20593–7581. The appeal may contain any supporting documentation or evidence that the appellant wishes to have considered.

(d) The Commandant, U.S. Coast Guard issues a ruling after reviewing the appeal submitted under paragraph (c) of this section. This ruling is final agency action.

[CGD 79–126,46 FR 3513, Jan. 15, 1981, as amended by CGD 88–052, 53 FR 25122, July 1, 1988; CGD 96–026, 61 FR 33668, June 28, 1996; CGD 97–023, 62 FR 33364, June 19, 1997; USCG–2002–12471, 67 FR 41333, June 18, 2002; USCG–2010–0351, 75 FR 36286, June 25, 2010]

### § 157.308 Revocation of exemption: procedure and appeals.

(a) The Officer in Charge, Marine Inspection may consider the revocation of the exemption granted under this subpart when:

(1) Requested by the vessel's owner;

(2) There is evidence that the vessel's owner, operator, or master has failed to comply with the requirements of this subpart; or

(3) There have been changes to the NPDES permit of a reception facility listed to meet § 157.304(b)(3) that would adversely affect the ability of that facility to process the vessel's discharges.

(b) The Officer in Charge, Marine Inspection, of the zone in which an occurrence under paragraph (a)(2) or (a)(3) of this section takes place notifies the owner, operator, and master of the exempted vessel of the specific reasons for considering the revocation of the exemption.

(c) Evidence or arguments for the retention of the exemption that are submitted to the Officer in Charge, Marine Inspection within thirty days of receipt of the notice under paragraph (b) of this section will be considered before a ruling is made.

(d) If the owner is not satisfied with the ruling made under this section by the Officer in Charge, Marine Inspection, that ruling may be appealed under the procedure in § 157.06 of this part.

### § 157.310 Exempted vessels: operations.

The owner, operator, and master of each vessel that has been granted an exemption under this subpart must ensure that:

(a) The vessel trades only between ports or places within the United States, its territories or possessions;

(b) The vessel loads cargo only at ports or places listed in the exemption;

(c) Except as allowed under § 157.41 (a) and (b) of this part, any ballast water, except segregated ballast discharged in accordance with § 157.43(b) of this part, and any tank washing or oil cargo residues are:

(1) Retained on board; or

(2) Transferred to a shore-based reception facility that is listed in the application for exemption, or in the case of an emergency or a shipyard entry, an alternative acceptable to the cognizant Officer in Charge, Marine Inspection;

(d) The vessel loads only those cargoes listed in the exemption; and

(e) The letter under § 157.306 that grants the exemption is on board the vessel; or

(f) The certificate of inspection bearing the following endorsement is on board the vessel:

Exempted under 33 CFR 157.306 from the requirements of (*33 CFR 157.10a or 157.10c, whichever is appropriate, will be inserted*). This vessel may not discharge cargo in any foreign port, nor may it load cargo in a port other than the following: (*a list of ports contained in the application that is accepted by the Coast Guard for the exempted vessel will be inserted here*).

[CGD 79–126, 46 FR 3513, Jan. 15, 1981, as amended by CGD 82–28, 50 FR 11630, Mar. 22, 1985; USCG–2000–7641, 66 FR 55573, Nov. 2, 2001]

## Subpart G—Interim Measures for Certain Tank Vessels Without Double Hulls Carrying Petroleum Oils

SOURCE: CGD 91–045, 59 FR 40188, Aug. 5, 1994, unless otherwise noted.

### § 157.400 Purpose and applicability.

(a) The purpose of this subpart is to establish mandatory safety and operational requirements to reduce environmental damage resulting from petroleum oil spills.

(b) This subpart applies to each tank vessel specified in § 157.01 of this part that—

(1) Is 5,000 gross tons or more;

(2) Carries petroleum oil in bulk as cargo or oil cargo residue; and

(3) Is not equipped with a double hull meeting § 157.10d of this part, or an equivalent to the requirements of § 157.10d, but required to be equipped with a double hull at a date set forth in 46 U.S.C. 3703a (b)(3) and (c)(3).

[CGD 91–045, 61 FR 39788, July 30, 1996, as amended by USCG–2000–7641, 66 FR 55573, Nov. 2, 2001]

### § 157.410 Emergency lightering requirements for oil tankers.

Each oil tanker, to which this subpart applies, shall carry the equipment listed in paragraphs (a), (b), and (c) of this section. This equipment shall be located on the main deck, in the cargo control room, in the pump room, or in the forecastle locker. This equipment must be protected from the weather and must be stored in one separate and marked location which is as convenient to the cargo manifold, as is practicable.

(a) Reducers, adapters, bolts, washers, nuts, and gaskets to allow at least two simultaneous transfer connections to be made from the vessel's cargo manifold to 15-centimeter (6-inch), 20-centimeter (8-inch), and 25-centimeter (10-inch) cargo hoses. All reducers must be permanently marked with sizes.

(b) One extra set of adapters, bolts, washers, nuts, and gaskets per reducer set must be carried as spares.

(c) Reducers, bolts, and gaskets must meet the requirements of 46 CFR 56.25. Cast iron and malleable iron must not be used.

[CGD 91–045, 59 FR 40188, Aug. 5, 1994, as amended by CGD 91–045, 61 FR 39789, July 30, 1996; USCG–1998–3799, 63 FR 35531, June 30, 1998]

### § 157.415 Bridge resource management policy and procedures.

(a) Not later than February 1, 1997, a tankship owner or operator shall provide written policy and procedures to masters and officers in charge of the navigational watch concerning the need for continuously reassessing how bridge-watch resources are being allocated and used, based on bridge resource management principles. This written policy and procedures must include vessel and crew specific examples that address the following:

(1) The number of qualified individuals that should be on watch to ensure that all duties can be performed effectively.

(2) The appropriate qualifications of all members of the navigational watch, the importance of confirming that all members of the watch are fit for duty, and the need to ensure that all members of the navigational watch are not impaired by fatigue.

(3) The need to take into account any known limitation in qualifications or fitness of individuals when making navigational and operational decisions.

(4) The need to be clear and unambiguous in assigning duties and the need to establish that the individual understands his or her responsibilities.

(5) The need to perform tasks in a clear order of priority and to adjust the priority of tasks as circumstances may require.

(6) The importance of assigning and reassigning members of the watch to locations where they can perform their duties most effectively.

(7) Conditions that warrant task reassignment among members of the watch.

(8) The instruments and equipment necessary for the effective performance of each task and appropriate actions if the instruments and equipment are not available or not functioning properly.

(9) The need for, and examples of, clear, immediate, reliable, and relevant communication among members of the navigational watch.

(10) The action to be taken to suppress, remove, and avoid nonessential activity and distractions on the bridge.

(11) The importance of collecting, processing, and interpreting all essential information and making it conveniently available to other members of the navigational watch and the pilot, as necessary to perform their duties.

(12) The need to ensure that nonessential materials are not placed on the bridge.

(13) The need to ensure that members of the navigational watch are prepared to respond at all times efficiently and

effectively to changes in circumstances.

(b) Beginning not later than February 1, 1997, a tank barge owner or operator shall not permit the barge to be towed unless those individuals assigned to duties that are similar to the duties of the officer in charge of a navigational watch on the primary towing vessel have been provided written bridge resource management policy and procedures as specified in paragraph (a) of this section.

[CGD 91–045, 61 FR 39789, July 30, 1996]

### § 157.420 Vessel specific watch policy and procedures.

(a) Not later than February 1, 1997, the owner or operator of a tankship shall provide written policy and procedures to masters concerning the need for each individual who is newly employed on board the vessel to have a reasonable opportunity to become familiar with the shipboard equipment, operating procedures, and other arrangements needed for the proper performance of their duties, before being assigned to such duties. This written policy and procedures shall be followed by the master and shall include the following:

(1) Allocation of a reasonable and appropriate time period for each newly employed individual to allow him or her the opportunity to become acquainted with the following:

(i) The specific equipment the individual will be using or operating; and

(ii) The vessel specific watchkeeping, safety, environmental protection, and emergency procedures and arrangements the individual needs to know to perform the assigned duties properly.

(2) Designation of a knowledgeable crew member who will be responsible for ensuring that an opportunity is provided to each newly employed individual to receive essential information in a language the individual understands.

(b) Beginning not later than February 1, 1997, a tank barge owner or operator shall not permit the barge to be towed unless those individuals assigned to duties as master or operator on the primary towing vessel have been provided written policy and procedures as specified in paragraph (a) of this section.

[CGD 91–045, 61 FR 39789, July 30, 1996]

### § 157.430 Enhanced survey requirements.

Beginning at each tank vessel's next regularly scheduled drydock examination and continuing as required under 46 CFR part 31, or, for each foreign flagged tank vessel, beginning at the next drydock and continuing as required under the foreign vessel's flag administration, a tank vessel owner or operator shall—

(a) Implement an enhanced survey program that complies with the standards of IMO Resolution A.744(18), Annex B sections 1.1.3–1.1.4, 1.2–1.3, 2.1, 2.3–2.6, 3–8, and Annexes 1–10 with appendices;

(b) Implement a vessel specific survey program that provides a level of protection equivalent to the requirements in paragraph (a)(1) of this section and is approved by the Commandant (CG–543). A written request for program equivalency under this paragraph must be submitted to the Commandant (CG–543); or

(c) For a tankship of less than 20,000 deadweight tons (dwt) carrying crude oil, a tankship of less than 30,000 dwt carrying product, or a tank barge, implement an enhanced survey program that—

(1) Includes oversight of the program by the Coast Guard, the vessel's flag administration, an authorized classification society as described in § 157.04 of this part, or a licensed professional engineer;

(2) Has the frequency of survey which is no less than the inspections required by 46 CFR subpart 31.10;

(3) Has survey scope and recordkeeping requirements that are comparable to the requirements of paragraph (a)(1) of this section; and

(4) Includes keeping a copy of the most recent survey on board the vessel or, upon request by the Coast Guard, making the surveys available within 24 hours for examination.

[CGD 91–045, 61 FR 39789, July 30, 1996]

### § 157.435 Vital systems surveys.

(a) A tank vessel owner or operator shall ensure that surveys of the following systems are conducted:

(1) *Cargo systems*. The survey must include the examination and testing of the items listed in chapters 6, 7, and 10 of the International Safety Guide for Oil Tankers and Terminals, if applicable, prior to cargo transfer operations.

(2) *Mooring systems*. The survey must include a visual examination of the emergency towline, the anchor releasing mechanism, and mooring lines prior to entering the port or place of destination, if weather permits, or prior to getting underway.

(b) Surveys must be conducted by company management personnel, company designated individuals, or vessel officers knowledgeable about the equipment operating parameters and having the authority, capability, and responsibility to initiate corrective action when the equipment is not functioning properly.

(c) The results of the survey required in paragraph (a) of this section, including the material condition of each system, must be recorded in the tank vessel's deck log or other onboard documentation.

[CGD 91–045, 61 FR 39789, July 30, 1996; 61 FR 41685, Aug. 9, 1996]

### § 157.440 Autopilot alarm or indicator.

(a) A tankship owner or operator shall ensure that each installed autopilot unit without automatic manual override has an audible and visual alarm, which is distinct from other required bridge alarms, that will activate if the helm is manually moved while the autopilot is engaged.

(b) A tank barge owner or operator shall ensure that each autopilot unit without automatic manual override installed on the primary towing vessel has a means to clearly indicate the autopilot status and warns personnel of the requirement to disengage the autopilot if positive rudder control is needed.

[CGD 91–045, 61 FR 39790, July 30, 1996]

### § 157.445 Maneuvering performance capability.

(a) A tankship owner or operator shall ensure that maneuvering tests in accordance with IMO Resolution A.751(18), sections 1.2, 2.3–2.4, 3–4.2, and 5 (with Explanatory Notes in MSC/Circ.644) have been conducted by July 29, 1997. Completion of maneuvering performance tests must be shown by—

(1) For a foreign flag tankship, a letter from the flag administration or an authorized classification society, as described in § 157.04 of this part, stating the requirements in paragraph (a) of this section have been met; or

(2) For a U.S. flag tankship, results from the vessel owner confirming the completion of the tests or a letter from an authorized classification society, as described in § 157.04 of this part, stating the requirements in paragraph (a) of this section have been met.

(b) If a tankship undergoes a major conversion or alteration affecting the control systems, control surfaces, propulsion system, or other areas which may be expected to alter maneuvering performance, the tankship owner or operator shall ensure that new maneuvering tests are conducted as required by paragraph (a) of this section.

(c) If a tankship is one of a class of vessels with identical propulsion, steering, hydrodynamic, and other relevant design characteristics, maneuvering performance test results for any tankship in the class may be used to satisfy the requirements of paragraph (a) of this section.

(d) The tankship owner or operator shall ensure that the performance test results, recorded in the format of Appendix 6 of the Explanatory Notes in MSC/Circ.644, are prominently displayed in the wheelhouse.

(e) Prior to entering the port or place of destination and prior to getting underway, the tankship master shall discuss the results of the performance tests with the pilot while reviewing the anticipated transit and the possible impact of the tankship's maneuvering capability on the transit.

[CGD 91–045, 61 FR 39790, July 30, 1996; 61 FR 41685, Aug. 9, 1996]

### § 157.450 Maneuvering and vessel status information.

A tankship owner, master, or operator shall comply with IMO Resolution A.601(15), Annex sections 1.1, 2.3, 3.1, and 3.2, with appendices.

[CGD 91–045, 61 FR 39790, July 30, 1996]

### § 157.455 Minimum under-keel clearance.

(a) The owner or operator of a tankship, that is not fitted with a double bottom that covers the entire cargo tank length, shall provide the tankship master with written under-keel clearance guidance that includes—

(1) Factors to consider when calculating the ship's deepest navigational draft;

(2) Factors to consider when calculating the anticipated controlling depth;

(3) Consideration of weather or environmental conditions; and

(4) Conditions which mandate when the tankship owner or operator shall be contacted prior to port entry or getting underway; if no such conditions exist, the guidance must contain a statement to that effect.

(b) Prior to entering the port or place of destination and prior to getting underway, the master of a tankship that is not fitted with the double bottom that covers the entire cargo tank length shall plan the ship's passage using guidance issued under paragraph (a) of this section and estimate the anticipated under-keel clearance. The tankship master and the pilot shall discuss the ship's planned transit including the anticipated under-keel clearance. An entry must be made in the tankship's official log or in other onboard documentation reflecting discussion of the ship's anticipated passage.

(c) The owner or operator of a tank barge, that is not fitted with a double bottom that covers the entire cargo tank length, shall not permit the barge to be towed unless the primary towing vessel master or operator has been provided with written under-keel clearance guidance that includes—

(1) Factors to consider when calculating the tank barge's deepest navigational draft;

(2) Factors to consider when calculating the anticipated controlling depth;

(3) Consideration of weather or environmental conditions; and

(4) Conditions which mandate when the tank barge owner or operator shall be contacted prior to port entry or getting underway; if no such conditions exist, the guidance must contain a statement to that effect.

[CGD 91–045, 62 FR 49608, Sept. 23, 1997]

### § 157.460 Additional operational requirements for tank barges.

(a) *Emergency steering capability*. The owner or operator of each tank barge shall not permit the barge to be towed unless, by November 27, 1997, the primary towing vessel has—

(1) A steering gear system with a main power unit, an alternative power unit, and two remote steering gear control systems, except that separate steering wheels or steering levers are not required. The steering gear control systems must be arranged so that if the system in operation fails, the other system can be brought into immediate operation from a position on the navigating bridge; or

(2) Twin screw propulsion with separate control systems for each propeller.

(b) *Fendering system*. An owner or operator of a tank barge shall not permit the barge to be towed unless the primary towing vessel and any fleeting or assist towing vessels have a fendering system that is of substantial size and composition to prevent metal to metal contact between the towing vessel and the barge during maneuvering operations.

[CGD 91–045, 61 FR 39790, July 30, 1996; 61 FR 41685, Aug. 9, 1996]

## Subpart H—Interim Measures for Certain Tank Vessels Without Double Hulls Carrying Animal Fat or Vegetable Oil

SOURCE: CGD 91–045, 61 FR 39791, July 30, 1996, unless otherwise noted.

### § 157.500 Purpose and applicability.

(a) The purpose of this subpart is to establish mandatory safety and operational requirements to reduce environmental damage resulting from the discharge of animal fat or vegetable oil.

(b) This subpart applies to each tank vessel specified in § 157.01 of this part that—

(1) Is 5,000 gross tons or more;

(2) Carries animal fat or vegetable oil in bulk as cargo or cargo residue; and

(3) Is not equipped with a double hull meeting § 157.10d of this part, or an equivalent to the requirements of § 157.10d, but required to be equipped with a double hull at a date set forth in 46 U.S.C. 3703a (b)(3) and (c)(3).

### § 157.510 Operational measures.

An owner or operator of a tank vessel that carries animal fat or vegetable oil in bulk as cargo or cargo residue shall comply with the requirements in all sections of subpart G of this part.

## Subpart I—Interim Measures for Certain Tank Vessels Without Double Hulls Carrying Other Non-Petroleum Oil

SOURCE: CGD 91–045, 61 FR 39791, July 30, 1996, unless otherwise noted.

### § 157.600 Purpose and applicability.

(a) The purpose of this subpart is to establish mandatory safety and operational requirements to reduce environmental damage resulting from the discharge of other non-petroleum oil.

(b) This subpart applies to each tank vessel specified in § 157.01 of this part that—

(1) Is 5,000 gross tons or more;

(2) Carries other non-petroleum oil in bulk as cargo or cargo residue; and

(3) Is not equipped with a double hull meeting § 157.10d of this part, or an equivalent to the requirements of § 157.10d, but required to be equipped with a double hull at a date set forth in 46 U.S.C. 3703a (b)(3) and (c)(3).

### § 157.610 Operational measures.

An owner or operator of a tank vessel that carries other non-petroleum oil in bulk as cargo or cargo residue shall comply with the requirements in all sections of subpart G of this part.

### APPENDIX A TO PART 157—DAMAGE ASSUMPTIONS, HYPOTHETICAL OUTFLOWS, AND CARGO TANK SIZE AND ARRANGEMENTS

1. *Source*. The procedures for the damage assumption calculations contained in this Appendix conform to Regulations 24, 25, and 26 of Annex I of the International Convention for the Prevention of the Pollution from Ships, 1973, done at London, November 2, 1973.

2. *Assumptions*. For the purpose of calculating hypothetical outflow from tank vessels, three dimensions of the extent of damage of a parallelepiped on the side and bottom of the vessel are assumed.

(a) For side damage, the conditions are as follows:

| Damage | Conditions |
|---|---|
| (1) Longitudinal extent $l_c$ | $\frac{1}{3} L^{2/3}$ or 14.5 m, whichever is less. |
| (2) Transverse extent ($t_c$) (inboard from the vessel's side at right angles to the centerline at the level corresponding to the assigned summer freeboard). | $B/5$ —or 11.5 m, whichever is less. |
| (3) Vertical extent ($v_c$) | From the base line upwards without limit. |

(b) For bottom damage, two conditions to be applied individually to the stated portions of the vessel, as follows:

| Damage | Conditions | |
|---|---|---|
| | For 0.3L from the forward perpendicular of ship | Any other part of ship |
| (1) Longitudinal extent ($l_s$) | $L/10$ | $L/10$ or 5 meters, whichever is less. |
| (2) Transverse extent ($t_s$) | $B/6$ or 10 meters, whichever is less but not less than 5 meters. | 5 meters. |
| (3) Vertical extent from the base line ($v_s$). | $B/15$ or 6 meters, whichever is less | $B/15$ or 6 meters, whichever is less. |

3. *Hypothetical Outflow of Oil*. (a) The hypothetical outflow of oil in the case of side damage ($O_c$) and bottom damage ($O_s$) is calculated by the following formula with respect to compartments breached by damage to all conceivable locations along the length

of the vessel to the extent as defined in section 2 of this Appendix.

(1) For side damages: Formula

$O_c = \Sigma W_i + \Sigma K_i C_i$

(2) For bottom damage: Formula II

$O_s = \frac{1}{3}(\Sigma Z_i W_i + \Sigma Z_i C_i)$

Where:

$W_i$=Volume of a wing tank assumed to be breached by the damage as specified in section 2 of this Appendix; $W_i$ for a segregated ballast tank may be taken equal to zero;

$C_i$=Volume of a center tank assumed to be breached by the damage as specified in section 2 of this Appendix; $C_i$ for a segregated ballast tank may be taken equal to zero;

$$K_i = 1 - \frac{b_i}{t_c}$$

when $b_i$ is equal to or greater than $t_c$, $K_i$ is equal to zero;

$$Z_i = 1 - \frac{h_i}{v_s}$$

when $h_i$ is equal to or greater than $v_s$, $Z_i$ is equal to zero;

$b_i$=Minimum width of wing tank under consideration measured inboard from the vessel's side at right angles to the centerline at the level corresponding to the assigned summer freeboard; and

$h_i$=Minimum depth of the double bottom under consideration; where no double bottom is fitted, $h_i$ is equal to zero.

(b) If a void space or segregated ballast tank of a length less than $l_c$ is located between wing oil tanks, $O_c$ in formula I of this section may be calculated on the basis of volume $W_i$ being the actual volume of one such tank (where they are of equal capacity) or the smaller of the two tanks (if they differ in capacity), adjacent to such space, multiplied by $S_i$ as defined below and taking for all other wing tanks involved in such a collision the value of the actual full volume.

$$S_i = 1 - \frac{l_i}{l_c}$$

Where $l_i$=length of void space or segregated ballast tank under consideration.

(c) Credit is only given in respect to double bottom tanks which are either empty or carrying clean water when cargo is carried in the tanks above.

(1) If the double bottom does not extend for the full length and width of the tank involved, the double bottom is considered nonexistent and the volume of the tanks above the area of the bottom damage must be included in formula II of this section even if the tank is not considered breached because of the installation of such a partial double bottom.

(2) Suction wells may be neglected in the determination of the value $h_i$ if such wells are not excessive in area and extend below the tank for a minimum distance and in no case more than half the height of the double bottom. If the depth of such a well exceeds half the height of the double bottom, $h_i$ is taken equal to the double bottom height minus the well height.

(d) In the case where bottom damage simultaneously involves four center tanks, the value of $O_s$ may be calculated according to formula III as follows:

$O_s = \frac{1}{4}(\Sigma Z_i W_i + \Sigma Z_i C_i)$

(e) Credit for reduced oil outflow from bottom damage may be applied to formula III for an installed emergency high suction cargo transfer system that:

(1) transfers within two hours oil equal to one half of the volume of the largest tank involved;

(2) has sufficient ballast or cargo tankage available to receive the transferred oil; and

(3) has the high suction piping installed at a height not less than the vertical extent of bottom damage ($v_s$).

4. *Allowable volumes of cargo tanks.*

(a) The allowable volume of a wing cargo tank ($VOL_w$) is equal to seventy-five percent of $O_A$. In a segregated ballast tank vessel $VOL_w$ may equal $O_A$ for a wing cargo oil tank located between two segregated ballast tanks each of length greater than $l_c$ and width greater than $t_c$.

(b) The allowable volume of a center cargo tank ($VOL_c$) is 50,000 cubic meters.

5. *Allowable length of cargo tanks.*

The length of each cargo tank (*1* a) must not exceed 10 meters or the distance calculated from (a), (b), or (c), as appropriate, whichever is greater:

(a) Where no longitudinal bulkhead is provided inside the cargo tanks: *1* a=[0.5(bi/B)+0.1] L, but not to exceed 0.2L.

(b) Where a centerline longitudinal bulkhead is provided inside the cargo tanks: *1* a=[0.25(bi/B)+0.15] L, but not to exceed 0.2L.

(c) Where two or more longitudinal bulkheads are provided inside the cargo tanks:

(1) For wing cargo tanks: *1* a = 0.2L.

(2) For center cargo tanks:

(i) If (bi/B) is equal to or greater than 0.2, *1* a = 0.2L.

(ii) If (bi/B) is less than 0.2:

(A) Where no centerline longitudinal bulkhead is provided, *1* a = [0.5(bi/B) + 0.1] L.

(B) Where a centerline longitudinal bulkhead is provided, *1* a = [0.25(bi/B) + 0.15] L.

(d) ''bi'' is the minimum distance from the ship's side to the outer longitudinal bulkhead of the tank in question, measured inboard at right angles to the centerline at the

level corresponding to the assigned summer freeboard.

[CGD 74–32, 40 FR 48283, Oct. 14, 1975, as amended by CGD 74–32, 40 FR 49328, Oct. 22, 1975; CGD 90–051, 57 FR 36245, Aug. 12, 1992; USCG–2008–0179, 73 FR 35015, June 19, 2008; USCG–2010–0351, 75 FR 36286, June 25, 2010]

## APPENDIX B TO PART 157—SUBDIVISION AND STABILITY ASSUMPTIONS

1. *Source*. The procedures for the loading assumption calculations contained in this Appendix conform to Regulation 28 of Annex I of the International Convention for the Prevention of the Pollution from Ships, 1973, done at London, November 2, 1973.

2. *Loading Assumptions*. For the purpose of calculating subdivision and damage stability for a tank vessel, the operating drafts must reflect actual partial or full load conditions consistent with trim and strength of the vessel. Ballast conditions need not be considered if the tank vessel is not carrying oil in cargo tanks excluding oily residues. Loading condition must reflect the specific gravities of the cargo.

3. *Damage Assumptions*.

(a) Damage is applied to all conceivable locations along the length of the vessel as follows:

(1) For a vessel of more than 225 meters in length, anywhere in the vessel's length.

(2) For a vessel of more than 150 meters, but not exceeding 225 meters in length, anywhere in the vessel's length except where the after or forward bulkhead bounding a machinery space located aft is involved in the damage assumption. The machinery space is calculated as a single floodable compartment.

(3) For a vessel 150 meters or less in length, anywhere in the vessel's length between adjacent transverse bulkheads except the machinery space.

(b) The extent and the character of the assumed side or bottom damage, as defined in section 2 of Appendix A of this part, must be applied except longitudinal bottom damage within 0.3L from the forward perpendicular must be assumed to be the same as that for side damage. If any damage of lesser extent results in a more severe condition, such damage must be assumed.

(c) If damage involves transverse bulkheads as specified in paragraphs (a)(1) and (2) of this section, transverse watertight bulkheads must be spaced at least at a distance equal to the longitudinal extent of the assumed damage specified in paragraph (b) of this section in order to be considered effective. Where transverse bulkheads are spaced at a lesser distance, one or more of these bulkheads within such extent of damage must be assumed as nonexistent for the purpose of determining flooded compartments.

(d) If the damages between adjacent transverse watertight bulkheads is within the definition contained in paragraph (a)(3) of this section, no main transverse bulkhead or a transverse bulkhead bounding side tanks or double bottom tanks is to be assumed damaged, unless:

(1) the spacing of the adjacent bulkheads is less than the longitudinal extent of assumed damage defined in paragraph (b) of this section; or

(2) there is a step or a recess in a transverse bulkhead of more than 3.05 meters in length, located within the extent of penetrations of assumed damage. The step formed by the after peak bulkhead and after peak tank top is not regarded as a step for these calculations.

(e) If pipes, ducts, or tunnels are situated within the assumed extent of damage, there must be arrangements so that progressive flooding may not thereby extend to compartments other than those assumed to be floodable for each case of damage.

(f) For oil tankers of 20,000 DWT and above, the damage assumptions must be supplemented by the following assumed bottom raking damage:

(1) Longitudinal extent:

(i) For ships of 75,000 DWT and above, 0.6L measured from the forward perpendicular.

(ii) For ships of less than 75,000 DWT, 0.4L measured from the forward perpendicular.

(2) Transverse extent: B/3 anywhere in the bottom.

(3) Vertical extent: Breach of the outer hull.

4. *Characteristic and Condition Assumption for Calculations*.

(a) Account must be taken of any empty or partially filled tanks, the specific gravity of cargoes carried, and any outflow of liquids from damaged compartments.

(b) The permeabilities are assumed as follows:

| Intended space use | Permeability |
|---|---|
| Stores | 0.60 |
| Accommodation | 0.95 |
| Machinery | 0.85 |
| Voids | 0.95 |
| Consumable liquids | [1] 0 or 0.95 |
| Other liquids | [2] 10 or 0.95 |

[1] Whichever results in the more severe requirements.
[2] The permeability of partially filled compartments must be consistent with actual density and the amount of liquid carried.

(c) The buoyancy of any superstructure directly above the side damage is to be disregarded. The unflooded parts of superstructures beyond the extent of damage may be taken into consideration if they are separated from the damaged space by watertight bulkheads and no progressive flooding of these intact spaces takes place. Class I doors are allowed in watertight bulkheads in the superstructure.

(d) The free surface effect is to be calculated:

(1) at an angle of heel of 5 degrees for each individual compartment; or

(2) by assessing the shift of liquids by moment of transference calculations.

(e) In calculating the effect of free surfaces of consumable liquids, it is to be assumed that, for each type of liquid, at least one transverse pair or a single centerline tank has a free surface and the tank or combination of tanks to be taken into account is to be those where the effect of free surface is the greatest.

[CGD 74–32, 40 FR 48283, Oct. 14, 1975, as amended by USCG–2000–7641, 66 FR 55573, Nov. 2, 2001; USCG–2008–0179, 73 FR 35015, June 19, 2008]

## APPENDIX C TO PART 157—PROCEDURE FOR DETERMINING DISTRIBUTION OF SEGREGATED BALLAST TANKS TO PROVIDE PROTECTION AGAINST OIL OUTFLOW IN THE EVENT OF GROUNDING, RAMMING, OR COLLISION

1. *Source*. The procedure for determining the distribution of segregated ballast tanks contained in this appendix conforms to Regulation 18, paragraphs 12–15 of the MARPOL Protocol.

2. *Procedure*. Protective location of segregated ballast tanks, voids, and other spaces that do not carry cargo which are within the cargo tank length is determined from the following:

$$\Sigma PA_c + \Sigma PA_s = J[L_t(B + 2D)]$$

Where:

$PA_c$=the side shell area in square meters based on projected molded dimensions for each segregated ballast tank, void, or other space that does not carry cargo and which complies with paragraph 2(b) of this appendix;

$PA_s$=the bottom shell area in square meters based on projected molded dimensions for each segregated ballast tank, void, or other space that does not carry cargo and which complies with paragraph 2(b) of this appendix;

$L_t$=the length in meters between the forward and after extremities of the cargo tanks;

B=the maximum breadth of the ship in meters measured amidship to the molded line of the frame; and

D=the molded depth in meters measured vertically from the top of the keel plate to the top of the freeboard deck beam at the side amidships. In tank vessels having rounded gunwales, the molded depth is measured from the top of the keel plate to the point of intersection of the molded lines of the deck and side shell plating, the lines being extended as though the gunwale were of angular design.

(a) *Method of determining a value for J*.

(1) For tank vessels for 20,000 DWT, J=0.45.

(2) For tank vessels of 200,000 DWT or more:

(i) J=0.30; or

(ii) J=the greater of 0.20, or

$$0.30 - \left[ a - \frac{(O_c + O_s)}{40_A} \right] ,$$

where:

a=0.25 for tank vessels of 200,000 DWT.

a=0.40 for tank vessels of 300,000 DWT.

a=0.50 for tank vessels of 420,000 DWT.

For values of DWT between 200,000 and 300,000 DWT, 300,000 and 420,000 DWT, and greater than 420,000 DWT, the value of ''a'' is determined by linear interpolation.

$O_c$ = as calculated in Appendix A of this part.

$O_s$ = as calculated in Appendix A of this part.

$O_A$ = the allowable oil outflow meeting §157.19(b)(1) of this part.

(3) For values of DWT between 20,000 and 200,000 DWT, the value of ''J'' is determined by linear interpolation between 0.45 and 0.30 respectively.

(b) $PA_c$ and $PA_s$: *Criteria for determining the segregated ballast tanks, voids, and other spaces that do not carry cargo*.

The following criteria are to be met for a segregated ballast tank, void, or space that does not carry cargo, to be used in determining $PA_c$ and $PA_s$:

(1) The minimum width of each wing tank or space, either of which extends for the full depth of the vessel's side or from the main deck to the top of the double bottoms is 2 meters or more. The width is measured inboard from the vessel's side shell plating at right angles to the vessel's center line. If a wing tank or space has a width anywhere within it that is less than 2 meters, that wing tank or space is not used when calculating $PA_c$.

(2) The minimum vertical depth of each double bottom tank or space is B/15 or 2 meters, whichever is smaller. If a double bottom tank or space has a depth less than B/15 or 2 meters, whichever is smaller, anywhere within it, the double bottom or space is not to be used when calculating $PA_s$.

(3) The minimum width of a wing tank or space is not measured in the way of—

(i) the turn of the bilge area; or

(ii) a rounded gunwale area.

(4) The minimum depth of a double bottom tank or space is not measured in the way of the turn of the bilge area.

[CGD 77–058b, 45 FR 43716, June 30, 1980, as amended by USCG–2008–0179, 73 FR 35015, June 19, 2008]

## APPENDIX D TO PART 157—EXAMPLE OF A PROCEDURE FOR DEDICATED CLEAN BALLAST TANKS OPERATIONS

1. *Source*. The example procedure for dedicated clean ballast tanks operation contained in this appendix conforms to the Annex of Resolution 14 of the MARPOL Protocol.

2. *Example Procedure*. Dedicated clean ballast tanks operational procedure:

(a) Before arrival at the loading port:

(1) Transfer all remaining oily mixtures to a cargo tank.

(2) Ensure that the pumping and piping designated for clean ballast operation have been properly cleaned to accommodate simultaneous discharge of clean ballast while loading.

(3) Ensure that all valves to the slop tank and the cargo tanks are closed.

(4) Perform visual inspection of all dedicated clean ballast tanks and their contents, if any, for signs of contamination.

(5) Discharge a sufficient amount of clean ballast water to ensure that remaining ballast water and cargo to be loaded will not exceed the permissible deadweight or draft. Leave a sufficient amount of water for flushing the piping, and as a minimum, a quantity equal to 10 times the volume of the affected piping.

(6) Ensure that all valves to the dedicated clean ballast tanks are closed.

(7) If no further ballast discharge is anticipated, drain the clean ballast piping.

(b) In the loading port:

(1) Perform normal loading operations of cargo tanks.

(2) Ensure sufficient slop tank capacity is available for subsequent reception of cargo pump and piping flushings.

(3) When applicable, discharge remaining clean ballast before entire piping system is used for loading. Leave the required minimum quantity of flushing water in ballast tanks.

(4) Ensure that all valves to the dedicated clean ballast tanks are closed.

(5) Ensure that all valves to the cargo tank are closed upon completion of loading.

(c) After departure from the loading port:

(1) Flush appropriate pumping and piping with sufficient water from dedicated clean ballast tanks into a slop tank.

(2) Ensure that valves to the slop tank are closed before pumping the remaining clean water overboard and monitoring oil content of the water.

(3) Ensure that all valves in the dedicated clean ballast tanks are closed.

(d) Before arrival at the unloading port:

(1) Ensure that all valves to the slop tank and cargo tanks are closed.

(2) Recheck that the pumping and piping designated for clean ballast operation have been properly cleaned.

(3) Ballast through clean cargo pumps and piping, considering the port's draft requirements.

(4) Ensure that all valves in the dedicated clean ballast tanks are closed.

(e) In the unloading port:

(1) Allocate pumping and piping intended for clean ballast operation.

(2) Perform normal unloading operations.

(3) As soon as draft conditions permit, complete ballasting to departure conditions.

(4) Ensure that all valves to the dedicated clean ballast tanks are closed.

(5) Complete unloading.

(f) After departure from the unloading port:

(1) Flush pumps and piping servicing the dedicated clean ballast tanks into the slop tank.

(2) Top up dedicated clean ballast tanks.

(3) Process the slop tank content in accordance with load on top (LOT) procedures.

[CGD 77–058b, 45 FR 43717, June 30, 1980, as amended by USCG–2000–7641, 66 FR 55573, Nov. 2, 2001]

## APPENDIX E TO PART 157—SPECIFICATIONS FOR THE DESIGN, INSTALLATION AND OPERATION OF A PART FLOW SYSTEM FOR CONTROL OF OVERBOARD DISCHARGES

*Source*. Appendix 2 to Annex 5 of IMO's Marine Environment Protection Committee document MEPC/Circ. 97. Paragraphs 1 and 2 are printed for information. Paragraphs 3, 4, and 5 are incorporated into §§157.11 and 157.37.

*Note:* Information in square brackets on Figure 1 has been added by the Coast Guard for clarity.

### 1 *Purpose*

The purpose of these Specifications is to provide specific design criteria and installation and operational requirements for the part flow system referred to in Regulation 18(6)(e) of Annex I of the International Convention for the Prevention of Pollution from Ships, 1973 as modified by the Protocol of 1978 relating thereto.

### 2 *Application*

2.1 Existing oil tankers may, in accordance with Regulation 18(6)(e) of Annex I of MARPOL 73/78, discharge dirty ballast water and oil contaminated water from cargo tank areas below the waterline, provided part of the flow is led through permanent piping to a readily accessible location on the upper deck or above where it may be visually observed during the discharge operation and provided that the arrangements comply with the requirements established by the Administration and which shall at least contain all the provisions of these Specifications.

2.2 The part flow concept is based on the principle that the observation of a representative part flow of the overboard effluent is equivalent to observing the entire effluent stream. These specifications provide the details of the design installation, and operation of a part flow system.

3 *General Provisions*

3.1 The part flow system shall be so fitted that it can effectively provide a representative sample of the overboard effluent for visual display under all normal operating conditions.

3.2 The part flow system is in many respects similar to the sampling system for an oil discharge monitoring and control system but shall have pumping and piping arrangements separate from such a system, or combined equivalent arrangements acceptable to the Administration.

3.3 The display of the part flow shall be arranged in a sheltered and readily accessible location on the upper deck or above, approved by the Administration (e.g. the entrance to the pump room). Regard should be given to effective communication between the location of the part flow display and the discharge control position.

3.4 Samples shall be taken from relevant sections of the overboard discharge piping and be passed to the display arrangement through a permanent piping system.

3.5 The part flow system shall include the following components:

.1 Sampling probes;

.2 Sample water piping system;

.3 Sample feed pump(s);

.4 Display arrangement;

.5 Sample discharge arrangement; and, subject to the diameter of the sample piping:

.6 Flushing arrangement.

.3.6 The part flow system shall comply with the applicable safety requirements.

4 *System Arrangement*

4.1 Sampling points.

4.1.1 Sampling point locations:

.1 Sampling points shall be so located that relevant samples can be obtained of the effluent being discharged through outlets below the waterline which are being used for operational discharges.

.2 Sampling points shall as far as practicable be located in pipe sections where a turbulent flow is normally encountered.

.3 Sampling points shall as far as practicable be arranged in accessible locations in vertical sections of the discharge piping.

4.1.2 Sampling probes:

.1 Sampling probes shall be arranged to protrude into the pipe a distance of about one fourth of the pipe diameter.

.2 Sampling probes shall be arranged for easy withdrawal for cleaning.

.3 The part flow system shall have a stop valve fitted adjacent to each probe, except that were the probe is mounted in a cargo line, two stop valves shall be fitted in series, in the sample line.

.4 Sampling probes should be of corrosion resistant and oil resistant material, of adequate strength, properly jointed and supported.

.5 Sampling probes shall have a shape that is not prone to becoming clogged by particle contaminants and should not generate high hydrodynamic pressures at the sampling probe tip. Figure 1 is an example of one suitable shape of a sampling probe.

.6 Sampling probes shall have the same nominal bore as the sample piping.

4.2 Sample piping:

.1 The sample piping shall be arranged as straight as possible between the sampling points and the display arrangement. Sharp bends and pockets where settled oil or sediment may accumulate should be avoided.

.2 The sample piping shall be so arranged that sample water is conveyed to the display arrangement within 20 seconds. The flow velocity in the piping should not be less than 2 metres per second.

.3 The diameter of the piping shall not be less than 40 millimetres if no fixed flushing arrangement is provided and shall not be less than 25 millimetres if a pressurized flushing arrangement as detailed in paragraph 4.4 is installed.

.4 The sample piping should be of corrosion-resistant and oil-resistant material, of adequate strength, properly jointed and supported.

.5 Where several sampling points are installed the piping shall be connected to a valve chest at the suction side of the sample feed pump.

4.3 Sample feed pump:

.1 The sample feed pump capacity shall be suitable to allow the flow rate of the sample water to comply with 4.2.2.

4.4 Flushing arrangement:

.1 If the diameter of sample piping is less than 40 millimetres, a fixed connexion from a pressurized sea or fresh water piping system shall be installed to enable flushing of the sample piping system.

4.5 Display arrangement:

.1 The display arrangement shall consist of a display chamber provided with a sight glass. The chamber should be of a size that will allow a free fall stream of the sample water to be clearly visible over a length of at least 200 millimetres. The Administration may approve equivalent arrangements.

.2 The display arrangement shall incorporate valves and piping in order to allow a part of the sample water to bypass the display chamber to obtain a laminar flow for display in the chamber.

.3 The display arrangement shall be designed to be easily opened and cleaned.

.4 The internal of the display chamber shall be white except for the background wall which shall be so coloured in order to facilitate the observation of any change in the quality of the sample water.

.5 The lower part of the display chamber shall be shaped as a funnel for collection of the sample water.

.6 A test cock for taking a grab sample shall be provided in order that a sample of the water can be examined independent of that in the chamber.

.7 The display arrangement shall be adequately lighted to facilitate visual observation of the sample water.

4.6 Sample discharge arrangement:

.1 The sample water leaving the display chamber shall be routed to the sea or to a slop tank through piping of adequate diameter.

5 *Operation*

5.1 When a discharge of dirty ballast water or other oil contaminated water from the cargo tank area is taking place through an outlet below the waterline, the part flow system shall provide sample water from the relevant discharge outlet at all times.

5.2 The sample water should be observed particularly during those phases of the discharge operation when the greatest possibility of oil contamination occurs. The discharge shall be stopped whenever any traces of oil are visible in the flow and when the oil content meter reading indicates oil content exceeds permissible limits.

5.3 On those systems that are fitted with flushing arrangements, the sample piping should be flushed after contamination has been observed and additionally it is recommended that the sample piping be flushed after each period of usage.

5.4 The ship's cargo and ballast handling manuals and, where applicable, those manuals required for crude oil washing systems or dedicated clean ballast tanks operation shall clearly describe the use of the part flow system in conjunction with the ballast discharge and the slop tank decanting procedures.

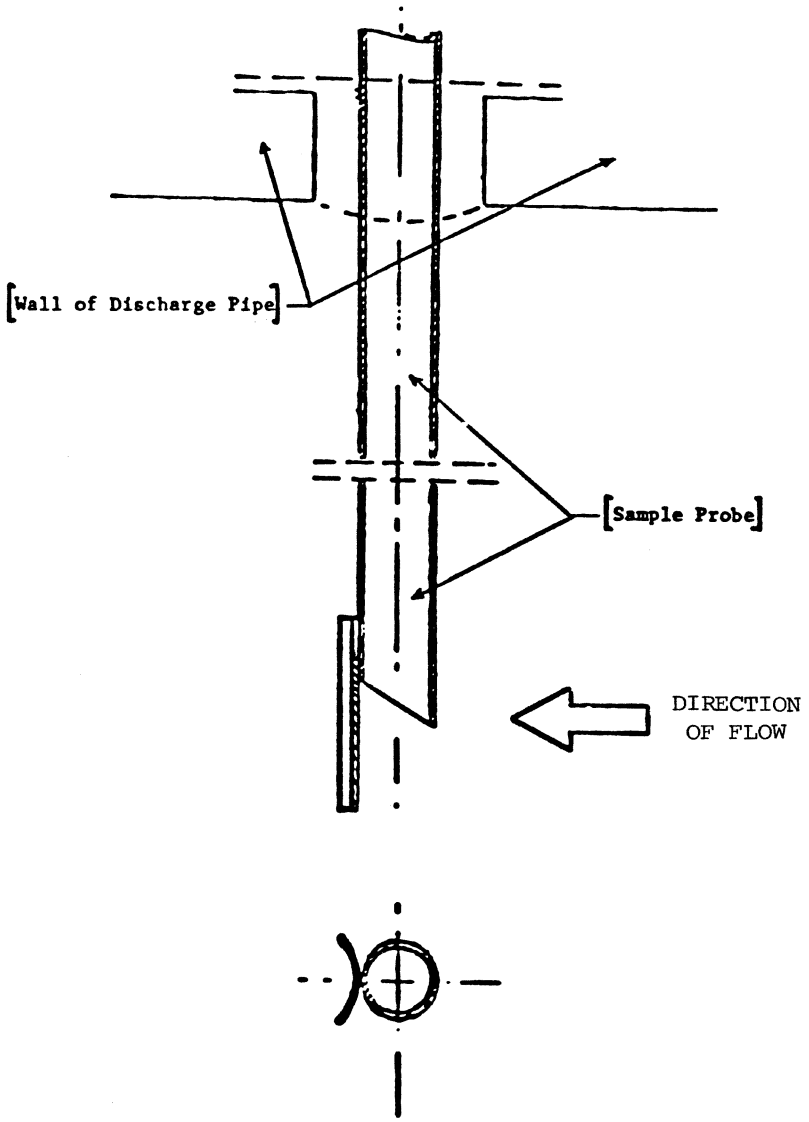


FIGURE 1

SAMPLING PROBE FOR A PART FLOW DISPLAY SYSTEM

[CGD 75–124a, 48 FR 45721, Oct. 6, 1983]

## APPENDIX F TO PART 157 [RESERVED]

## APPENDIX G TO PART 157—TIMETABLES FOR APPLICATION OF DOUBLE HULL REQUIREMENTS

1. *Source.* These timetables conform to 46 U.S.C. 3703a(c).

2. *Timetables.*

(a) In this section, the age of a vessel is determined from the later of the date on which the vessel is—

(1) Delivered after original construction;

(2) Delivered after completion of a major conversion; or

(3) Qualified for documentation under section 4136 of the Revised Statutes of the United States (46 U.S.C. app. 14).

(b) A vessel of less than 5,000 gross tons for which a building contract or contract for major conversion was placed before June 30, 1990, and that is delivered under that contract before January 1, 1994, and a vessel that had its appraised salvage value determined by the Coast Guard before June 30, 1990, and that qualifies for documentation under section 4136 of the Revised Statutes of the United States (46 U.S.C. app. 14) before January 1, 1994, may not operate in the navigable waters or the Exclusive Economic Zone of the United States after January 1, 2015, unless equipped with a double hull or with a double containment system determined by the Coast Guard to be as effective as a double hull for the prevention of a discharge of oil.

(c) A vessel for which a building contract or contract for major conversion was placed before June 30, 1990, and that is delivered under that contract before January 1, 1994, and a vessel that had its appraised salvage determined by the Coast Guard before June 30, 1990, and that qualifies for documentation under 46 CFR subpart 67.19 before January 1, 1994, may not operate in the navigable waters or Exclusive Economic Zone of the United States unless equipped with a double hull—

(1) In the case of vessel of at least 5,000 gross tons but less than 15,000 gross tons—

(i) After January 1, 1995, if the vessel is 40 years old or older and has a single hull, or is 45 years old or older and has a double bottom or double sides;

(ii) After January 1, 1996, if the vessel is 39 years old or older and has a single hull, or is 44 years old or older and has a double bottom or double sides;

(iii) After January 1, 1997, if the vessel is 38 years old or older and has a single hull, or is 43 years old or older and has a double bottom or double sides;

(iv) After Janaury 1, 1998, is the vessel is 37 years old or older and has a single hull, or is 42 years old or older and has a double bottom or double sides;

(v) After January 1, 1999, if the vessel is 36 years old or older and has a single hull, or is 41 years old or older and has a double bottom or double sides;

(vi) After January 1, 2000, if the vessel is 35 years old or older and has a single hull, or is 40 years old or older and has a double bottom or double sides;

(vii) After January 1, 2005, if the vessel is 25 years old or older and has a single hull, or is 30 years old or older and has a double bottom or double sides;

(2) In the case of a vessel of at least 15,000 gross tons but less than 30,000 gross tons—

(i) After January 1, 1995, if the vessel is 40 years old or older and has a single hull, or is 45 years old or older and has a double bottom or double sides;

(ii) After January 1, 1996, if the vessel is 38 years old or older and has a single hull, or is 43 years old or older and has a double bottom or double sides;

(iii) After January 1, 1997, if the vessel is 36 years old or older and has a single hull, or is 41 years old or older and has a double bottom or double side;

(iv) After January 1, 1998, if the vessel is 34 years old or older and has a single hull, or is 39 years old or older and has a double bottom or double sides;

(v) After January 1, 1999, if the vessel is 32 years old or older and has a single hull, or is 37 years old or older and has a double bottom or double sides;

(vi) After January 1, 2000, if the vessel is 30 years old or older and has a single hull, or is 35 years old or older and has a double bottom or double sides;

(vii) After January 1, 2001, if the vessel is 29 years old or older and has a single hull, or is 34 years old or older and has a double bottom or double sides;

(viii) After January 1, 2002, if the vessel is 28 years old or older and has a single hull, or is 33 years old or older and has a double bottom or double sides;

(ix) After January 1, 2003, if the vessel is 27 years old or older and has a single hull, or is 32 years old or older and has a double bottom or double sides;

(x) After Janaury 1, 2004, if the vessel is 26 years old or older and has a single hull, or is 31 years old or older and has a double bottom or double sides;

(xi) After January 1, 2005, if the vessel is 25 years old or older and has a single hull, or is 30 years old or older and has a double bottom or double sides; and

(3) In the case of a vessel of at least 30,000 gross tons—

(i) After January 1, 1995, if the vessel is 28 years old or older and has a single hull, or is 33 years old or older and has a double bottom or double sides;

(ii) After January 1, 1996, if the vessel is 27 years old or older and has a single hull, or is

32 years old or older and has a double bottom or double sides;

(iii) After January 1, 1997, if the vessel is 26 years old or older and has a single hull, or is 31 years old or older and has a double bottom or double sides;

(iv) After January 1, 1998, if the vessel is 25 years old or older and has a single hull, or is 30 years old or older and has a double bottom or double sides;

(v) After January 1, 1999, if the vessel is 24 years old or older and has a single hull, or is 29 years old or older and has a double bottom or double sides;

(vi) After January 1, 2000, if the vessel is 23 years old or older and has a single hull, or is 28 years old or older and has a double bottom or double sides;

(d) Except as provided in paragraph (b) of this section—

(1) A vessel that has a single hull may not operate after January 1, 2010, and

(2) A vessel that has a double bottom or double sides may not operate after January 1, 2015.

NOTE: Double sides and double bottoms must meet the requirements in §157.10d(c) or (d), as appropriate. A vessel will be considered to have a single hull if it does not have double sides and a double bottom that meet the requirements in §157.10d(c) and §157.10d(d). To determine a tank vessel's double hull compliance date under OPA 90, use the vessel's hull configuration (*i.e.*, single hull; single hull with double sides; or single hull with double bottom) on August 18, 1990. The conversion of a single hull tank vessel to include only double sides or only a double bottom after August 18, 1990, will not result in a change of the vessel's originally scheduled phase-out date. The conversion of a single hull tank vessel to a double hull tank vessel meeting the requirements of §157.10d complies with OPA 90.

[CGD 90–051, 57 FR 36245, Aug. 12, 1992, as amended by USCG–1999–6164, 65 FR 39262, June 23, 2000]

# PART 158—RECEPTION FACILITIES FOR OIL, NOXIOUS LIQUID SUBSTANCES, AND GARBAGE

## Subpart A—General

Sec.
158.100 Purpose.
158.110 Applicability.
158.115 Penalties for violation.
158.120 Definitions.
158.130 Delegations.
158.133 Which ports and terminals must provide reception facilities?
158.135 Which ports and terminals must have Certificates of Adequacy?
158.140 Applying for a Certificate of Adequacy.
158.150 Waivers and alternatives.
158.160 Issuance and termination of a Certificate of Adequacy.
158.163 Reception facility operations.
158.165 Certificate of Adequacy: Change of information.
158.167 Reporting inadequate reception facilities.

SUSPENSION, REVOCATION, AND APPEALS

158.170 Grounds for suspension.
158.172 Notification of a suspension order.
158.174 Suspension of a Certificate of Adequacy: Procedure.
158.176 Effect of suspension of a Certificate of Adequacy.
158.178 Actions during a suspension.
158.180 Certificate of Adequacy: Procedures after revocation or the part no longer applies.
158.190 Appeals.

## Subpart B—Criteria for Reception Facilities: Oily Mixtures

158.200 General.
158.210 Ports and terminals loading crude oil.
158.220 Ports and terminals loading more than 1,000 metric tons of oil other than crude oil or bunker oil.
158.230 Ports and terminals other than ports and terminals under §§158.210, 158.220, and 158.240.
158.240 Ship repair yards.
158.250 Standard discharge connection.

## Subpart C—Criteria for Certifying That a Port's or Terminal's Facilities Are Adequate for Receiving NLS Residue

158.300 Purpose.
158.310 Reception facilities: General.
158.320 Reception facilities: Capacity, and exceptions.
158.330 Ports and terminals: Equipment.

## Subpart D—Criteria for Adequacy of Reception Facilities: Garbage

158.400 Purpose.
158.410 Reception facilities: General.
158.420 Reception facilities: Capacity and exceptions.

## Subpart E—Port and Terminal Operations

158.500 Draining cargo area and piping systems.
158.520 Following the instruction manual.

AUTHORITY: 33 U.S.C. 1903(b), 1905(c); 49 CFR 1.46.

## Subpart A—General

SOURCE: CGD 85–010, 52 FR 7761, Mar. 12, 1987, unless otherwise noted.

### § 158.100 Purpose.

This part establishes the following:

(a) Criteria for determining the adequacy of reception facilities.

(b) Procedures for certifying that reception facilities are adequate for receiving—

(1) Oily mixtures from oceangoing tankers and any other oceangoing ships of 400 gross tons or more;

(2) NLS residue from oceangoing ships; or

(3) Garbage from ships.

(c) Standards for ports and terminals to reduce NLS residue.

[CGD 85–010, 52 FR 7761, Mar. 12, 1987, as amended by CGD 88–002, 54 FR 18407, Apr. 28, 1989; USCG–2000–7641, 66 FR 55573, Nov. 2, 2001]

### § 158.110 Applicability.

(a) Subparts B, C, and E apply to each port and each terminal located in the United States or subject to the jurisdiction of the United States that is—

(1) Used by oceangoing tankers, or any other oceangoing ships of 400 gross tons or more, carrying oily mixtures, or by oceangoing ships to transfer NLSs, except those ports and terminals that are used only by—

(i) Tank barges that are not configured and are not equipped to ballast or wash cargo tanks while proceeding enroute;

(ii) Ships carrying NLS operating under waivers under 46 CFR 153.491(b); or

(2) A ship repair yard that services oceangoing ships carrying oil or NLS residue.

(b) Subpart D applies to each port and terminal located in the United States or subject to the jurisdiction of the United States.

[CGD 88–002, 54 FR 18407, Apr. 28, 1989, as amended by USCG–2000–7641, 66 FR 55574, Nov. 2, 2001]

### § 158.115 Penalties for violation.

(a) A person who violates MARPOL 73/78, the Act, or the regulations of this part is liable for a civil penalty not to exceed $25,000 for each violation, as provided by 33 U.S.C. 1908(b)(1). Each day of a continuing violation constitutes a separate violation.

(b) A person who makes a false, fictitious statement or fraudulent representation in any matter in which a statement or representation is required to be made to the Coast Guard under MARPOL 73/78, the Act, or the regulations of this part, is liable for a civil penalty not to exceed $5,000 for each statement or representation, as provided by 33 U.S.C. 1908(b)(2).

(c) A person who knowingly violates MARPOL 73/78, the Act, or the regulations of this part is liable for a fine for each violation, of not more than $50,000 dollars, or imprisonment for not more than 5 years, or both, as provided by 33 U.S.C. 1908(a).

[CGD 88–002, 54 FR 18407, Apr. 28, 1989]

### § 158.120 Definitions.

As used in this part:

*Bunker oil* means oil loaded into bunker tanks for use as fuel.

*Captain of the Port* (COTP) means the Coast Guard officer commanding a Captain of the Port Zone described in part 3 of this chapter.

*Certificate of Adequacy* means a document issued by the Coast Guard or other authorized agency that certifies a port or terminal meets the requirements of this part with respect to reception facilities required under the Act and MARPOL 73/78, and has Form A, Form B, or Form C attached.

*Clean ballast* has the same meaning as in § 157.03(e) of this chapter.

*Commandant* means Commandant, U.S. Coast Guard.

*Commercial fishing facility* means docks, piers, processing houses, or other facilities which receive commercial fishery products from ships.

*Daily vessel average* means the total number of oceangoing tankers, or any other oceangoing ships of 400 gross tons or more, carrying residues and mixtures containing oil, serviced over a typical continuous 12 month period, divided by 365.

*Form A* means the application for a reception facility Certificate of Adequacy for oil, Coast Guard form USCG-CG-5401A (9–85).

*Form B* means the application for a reception facility Certificate of Adequacy for NLS, Coast Guard form USCG-CG-5401B(2–87).

*Form C* means the application for a Certificate of Adequacy for a Reception Facility for Garbage, Coast Guard form USCG-CG-5401C. ''Garbage'' means all kinds of victual, domestic, and operational waste, excluding fresh fish and parts thereof, generated during the normal operation of the ship and liable to be disposed of continuously or periodically, except dishwater, graywater, and those substances that are defined or listed in other annexes to MARPOL 73/78. ''Harmful substance'' means any substance which, if introduced into the sea, is liable to create hazards to human health, harm living resources and marine life, damage amenities or interfere with other legitimate uses of the sea, and includes any substance subject to control by MARPOL 73/78.

*High viscosity NLS* includes Category A NLSs having a viscosity of at least 25 mPa.s at 20 °C and of at least 25 mPa.s at the time they are unloaded, high viscosity Category B NLSs, and high viscosity Category C NLSs.

*High viscosity Category B NLS* means any Category B NLS having a viscosity of at least 25 mPa.s at 20 °C and at least 25 mPa.s at the time it is unloaded.

*High viscosity Category C NLS* means any Category C NLS having a viscosity of at least 60 mPa.s at 20 °C and at least 60 mPa.s at the time it is unloaded.

*MARPOL 73/78* means the International Convention for the Prevention of Pollution from Ships, 1973, as modified by the Protocol of 1978 relating to that Convention. A copy of MARPOL 73/78 is available from the International Maritime Organization, 4 Albert Embankment, London, SE1 7SR, England.

*Medical waste* means isolation wastes, infectious agents, human blood and blood products, pathological wastes, sharps, body parts, contaminated bedding, surgical wastes and potentially contaminated laboratory wastes, dialysis wastes, and such additional medical items as prescribed by the Administrator of the EPA by regulation. ''Mineral and oil industry shorebase'' means a place or onshore structure or facility which is a base of operations for ships serving the mineral and oil industry.

*Noxious liquid substance* (NLS) means—

(1) Each substance listed in § 151.47 or § 151.49 of this chapter;

(2) Each substance having an ''A'', ''B'', ''C'', or ''D'' beside it's name in the column headed ''Pollution Category'' in table 1 of 46 CFR part 153; and

(3) Each substance that is identified as an NLS in a written permission issued under 46 CFR 153.900(d).

*Oceangoing ship* means a ship that—

(1) Is operated under the authority of the United States and engages in international voyages;

(2) Is operated under the authority of the United States and is certificated for ocean service;

(3) Is operated under the authority of the United States and is certificated for coastwise service beyond three miles from land;

(4) Is operated under the authority of the United States and operates at any time seaward of the outermost boundary of the territorial sea of the United States as defined in § 2.22 of this chapter; or

(5) Is operated under the authority of a country other than the United States.

NOTE: A Canadian or U.S. ship being operated exclusively on the Great Lakes of North America or their connecting and tributary waters, or exclusively on the internal waters of the United States and Canada, is not an ''oceangoing ship.''

*Oil* means petroleum whether in solid, semi-solid, emulsified, or liquid form, including but not limited to, crude oil, fuel oil, sludge, oil refuse, oil residue, and refined products, and, without limiting the generality of the foregoing, includes the substances listed in Appendix I of Annex I of MARPOL 73/78. ''Oil'' does not include animal and vegetable based oil or noxious liquid substances (NLS) designated under Annex II of MARPOL 73/78.

*Oil cargo residue* means any residue of oil cargo whether in solid, semi-solid, emulsified, or liquid form from cargo tanks and cargo pump room bilges, including but not limited to, drainages,

leakages, exhausted oil, muck, clingage, sludge, bottoms, paraffin (wax), and any constituent component of oil. The term ''oil cargo residue'' is also known as ''cargo oil residue.''

*Oil residue* means—

(1) Oil cargo residue; and

(2) Other residue of oil resulting from drainages, leakages, exhausted oil, and other similar occurrences from machinery spaces.

*Oily mixture* means a mixture, in any form, with any oil content. ''Oily mixture'' includes, but is not limited to—

(1) Slops from bilges;

(2) Slops from oil cargoes (such as cargo tank washings, oily waste, and oily refuse);

(3) Oil residue; and

(4) Oily ballast water from cargo or fuel oil tanks.

*Person* has the same meaning as in §151.05(n) of this chapter.

*Person in charge* means an owner, operator, or a person authorized to act on behalf of a port or terminal.

NOTE: The ''person in charge'' under this part is not necessarily the same person as the ''person in charge'' referred to in parts 151, 154, 155, and 156 of this chapter (as defined in §154.105 of this chapter.)

*Prewash* means a tank washing operation that meets the procedure in 46 CFR 153.1120.

*Port* means—

(1) A group of terminals that combines to act as a unit and be considered a port for the purposes of this part;

(2) A port authority or other organization that chooses to be considered a port for the purposes of this part; or

(3) A place or facility that has been specifically designated as a port by the COTP.

*Reception facility* means anything capable of receiving shipboard oily mixtures or NLS residue, or receiving garbage, including, but not limited to—

(1) Fixed piping that conveys residues and mixtures from the ship to a storage or treatment system;

(2) Tank barges, railroad cars, tank trucks, or other mobile facilities;

(3) Containers or other receptacles that are used as temporary storage for garbage; or

(4) Any combination of fixed and mobile facilities. ''Recreational boating facility'' means a facility that is capable of providing wharfage or other services for 10 or more recreational vessels. It includes, but is not limited to, marinas, boatyards, and yacht clubs, but does not include a place or facility containing only an unattended launching ramp.

*Regulated NLS cargo* includes each Category A or high viscosity or solidifying Category B or C NLS cargo listed in table 1 of 46 CFR part 153 that contains a reference to §153.908(a) or §153.908(b) in the ''Special Requirements'' column of that table and is unloaded at the port or terminal within a typical continuous 12 month period either before or after application is made for a Certificate of Adequacy.

*Residues and mixtures containing NLSs* (NLS residue) means—

(1) Any Category A, B, C, or D NLS cargo retained on the ship because it fails to meet consignee specifications;

(2) Any part of a Category A, B, C or D NLS cargo remaining on the ship after the NLS is discharged to the consignee, including but not limited to puddles on the tank bottom and in sumps, clingage in the tanks, and substance remaining in the pipes; or

(3) Any material contaminated with Category A, B, C, or D NLS cargo, including but not limited to bilge slops, ballast, hose drip pan contents, and tank wash water.

*Segregated ballast* has the same meaning as contained in §157.03(r) of this chapter.

*Ship* means a vessel of any type whatsoever, operating in the marine environment. This includes hydrofoils, air cushion vehicles, submersibles, floating craft whether self-propelled or not, and fixed or floating drilling rigs or other platforms.

*Solidifying NLS* means a Category A, B, or C NLS that has a melting point—

(1) Greater than 0 °C but less than 15 °C and a temperature, measured under the procedure in 46 CFR 153.908(d), that is less than 5 °C above its melting point at the time it is unloaded; or

(2) 15 °C or greater and has a temperature, measured under the procedure in 46 CFR 153.908(d), that is less than 10 °C above its melting point at the time it is unloaded.

*Tank barge* has the same meaning as contained in 46 CFR 30.10–65.

*Tanker* means a ship constructed or adapted primarily to carry oil in bulk in the cargo spaces.

*Terminal* means an onshore facility or an offshore structure located in the navigable waters of the United States or subject to the jurisdiction of the United States and used, or intended to be used, as a port or facility for the transfer or other handling of a harmful substance.

NOTE: The Coast Guard interprets commercial fishing facilities, recreational boating facilities, and mineral and oil industry shorebases to be terminals for the purposes of Annex V of MARPOL 73/78, since these facilities normally provide wharfage and other services, including garbage handling, for ships. ''The Act'' means the Act to Prevent Pollution from Ships, as amended, (33 U.S.C. 1901–1911).

*The Act* means the Act to Prevent Pollution from Ships (94 Stat. 2297, 33 U.S.C. 1901 *et seq*).

[CGD 85–010, 52 FR 7761, Mar. 12, 1987, as amended by CGD 88–002, 54 FR 18407, Apr. 28, 1989; USCG–2000–7641, 66 FR 55574, Nov. 2, 2001; USCG–2008–0179, 73 FR 35015, June 19, 2008]

### § 158.130 Delegations.

Each COTP is delegated the authority to—

(a) Conduct inspections at ports and terminals required to have reception facilities under this part;

(b) Issue Certificates of Adequacy;

(c) Grant waivers under § 158.150;

(d) Designate ports; and

(e) Deny entry of ships to any port or terminal, except when a ship is entering under force majeure, that does not have—

(1) A Certificate of Adequacy if required under § 158.135; or

(2) Reception facilities for garbage required under subpart D of this part.

[CGD 88–002, 54 FR 18408, Apr. 28, 1989]

### § 158.133 Which ports and terminals must provide reception facilities?

(a) A port or terminal which receives oceangoing tankers, or any other oceangoing ship of 400 gross tons or more, carrying oily mixtures, must have a reception facility which meets subpart B of this part.

(b) A port or terminal which receives oceangoing ships carrying NLSs must have a reception facility which meets subpart C of this part.

(c) All ports and terminals under the jurisdiction of the United States, including commercial fishing facilities, mineral and oil shorebases, and recreational boating facilities, must have a reception facility which meets subpart D of this part.

[CGD 88–002, 54 FR 18408, Apr. 28, 1989, as amended by USCG–2000–7641, 66 FR 55574, Nov. 2, 2001]

### § 158.135 Which ports and terminals must have Certificates of Adequacy?

To continue to receive ships, a port or terminal must hold one or more Certificates of Adequacy to show compliance with—

(a) Subpart B of this part if it receives oceangoing tankers, or any other oceangoing ship of 400 gross tons or more, carrying oily mixtures.

(b) Subpart C of this part if it receives oceangoing ships carrying NLSs.

(c) Subpart D of this part if it receives—

(1) The ships under paragraph (a) or (b) of this section; or

(2) Fishing vessels which offload more than 500,000 pounds of commercial fishery products from all ships during a calendar year.

[CGD 88–002, 54 FR 18408, Apr. 28, 1989, as amended by USCG–2000–7641, 66 FR 55574, Nov. 2, 2001]

### § 158.140 Applying for a Certificate of Adequacy.

(a) To continue to receive ships at a port or terminal required by § 158.135 to have a Certificate of Adequacy for its reception facilities, the person in charge must apply to the Coast Guard for a certificate as follows:

(1) Applicants for a Certificate of Adequacy required by § 158.135(a) or (b) must apply to the COTP of the Zone in which the port or terminal is located using Form A or Form B, respectively.

(2) An applicant for a Certificate of Adequacy required by section 158.135(c) must apply on Form C to the COTP of the Zone in which the port or terminal is located.

(b) Applications for Certificates of Adequacy, Forms A, B, or C, may be

obtained from the local Coast Guard COTP.

[CGD 88–002, 54 FR 18408, Apr. 28, 1989, as amended by CGD 96–026, 61 FR 33668, June 28, 1996; 61 FR 36629, July 12, 1996]

### § 158.150 Waivers and alternatives.

(a) If the person in charge believes that a requirement in this part is unreasonable or impracticable for the port's or terminal's operations, the person in charge may submit a request for a waiver to the COTP. This application must—

(1) Be in writing; and

(2) Include the—

(i) Reasons why the requirement is unreasonable or impracticable;

(ii) Proposed alternatives that meet MARPOL 73/78; and

(iii) Additional information requested by the COTP.

(b) If the COTP allows the alternative proposed under paragraph (a)(2)(ii) of this section, the waiver—

(1) Is in writing; and

(2) States each alternative that applies and the requirement under this part for which the alternative is substituted.

(c) The person in charge shall ensure that each waiver issued under paragraph (b) of this section is attached to the Certificate of Adequacy issued for the port or terminal.

### § 158.160 Issuance and termination of a Certificate of Adequacy.

(a) After reviewing an application made under § 158.140(a)(1), the COTP determines by inspection the following:

(1) When the application is made on Form A, whether or not the reception facility meets Subpart B of this part.

(2) When the application is made on Form B, whether or not the reception facility and the port, or the reception facility and the terminal, meet Subpart C of this part.

NOTE: If in the instruction manual required by § 158.330(b) there is a certification by a registered professional engineer licensed by a state or the District of Columbia that the backpressure requirements under § 158.330(a) are met, the COTP determines whether or not to accept this finding.

(b) After the inspections under paragraph (a) are conducted, and after consulting with the Administrator of the Environmental Protection Agency (EPA) or his or her designee, the COTP.

(1) Issues a Certificate of Adequacy to the person in charge for the port or terminal; or

(2) Denies the application and informs the person in charge in writing of the reasons for the denial.

(c) After reviewing an application made under § 158.140(a)(2), the COTP—

(1) Issues a Certificate of Adequacy to the person in charge for the port or terminal; or

(2) Denies the application and informs the person in charge in writing of the reasons for the denial.

(d) In order to remain valid, the Certificate of Adequacy must have attached to it any waivers that are granted under § 158.150 when the Certificate of Adequacy is issued.

(e) Each Certificate of Adequacy remains valid for a period of five years or until—

(1) Suspended;

(2) Revoked; or

(3) This part no longer applies to the port or terminal.

[CGD 88–002, 54 FR 18408, Apr. 28, 1989, as amended by CGD 96–026, 61 FR 33668, June 28, 1996; USCG–2010–0351, 75 FR 36286, June 25, 2010]

### § 158.163 Reception facility operations.

(a) Each person in charge and each person who is in charge of a reception facility shall ensure that the reception facility does not operate in a manner that violates any requirement under this part.

(b) A copy of the Certificate of Adequacy issued for the port or terminal must be—

(1) At each port and terminal under this part; and

(2) Available for inspection by the COTP and the master, operator, person who is in charge of a ship, or agent for a ship.

(c) Ports and terminals required to have an Operations Manual under this chapter or 46 CFR Chapter 1 must have a copy of the Certificate of Adequacy issued for the port or terminal, including any waivers, attached to that Operations Manual.

[CGD 85–010, 52 FR 7761, Mar. 12, 1987, as amended by CGD 88–002, 54 FR 18409, Apr. 28, 1989]

### § 158.165 Certificate of Adequacy: Change of information.

(a) Except as required in paragraph (b) of this section, the person in charge shall notify the COTP in writing within 10 days after any information required in section 2, 3A, 3G, or 3H, of Form A or section 2, 5A, or 5C of Form B changes.

(b) The person in charge shall notify the COTP in writing within 30 days after any information required in the following is changed:

(1) Form A, sections 1, 3B, 3C, 3E, 3F, 3I, or 3J.

(2) Form B, sections 1, 3, 4, 5B, 5D, 5E, 5F or 5G.

(3) Form C, sections A1, B1, B2, or D4.

(c) The person in charge shall maintain at the port or terminal a copy of the information submitted under paragraphs (a) and (b) of this section, until a corrected Certificate of Adequacy is received from the COTP.

[CGD 85–010, 52 FR 7761, Mar. 12, 1987, as amended by CGD 88–002, 54 FR 18409, Apr. 28, 1989; 55 FR 35988, Sept. 4, 1990]

### § 158.167 Reporting inadequate reception facilities.

Any person may report to the local Coast Guard COTP that reception facilities required by these regulations or MARPOL 73/78 are inadequate. Reports of inadequate reception facilities may be made orally, in writing or by telephone.

[CGD 88–002, 54 FR 18409, Apr. 28, 1989]

## SUSPENSION, REVOCATION, AND APPEALS

### § 158.170 Grounds for suspension.

The COTP may suspend a Certificate of Adequacy if—

(a) Deficiencies recur or significantly affect the adequacy of the reception facility;

(b) Continued operations will result in undue delay to ships calling at the port or terminal;

(c) There is a failure to accept NLS residue from a ship after it's cargo tanks are prewashed in accordance with 46 CFR 153.1120; or

(d) There is a substantial threat of discharge of oil or NLS into or upon the navigable waters of the United States or adjoining shorelines.

### § 158.172 Notification of a suspension order.

(a) If the COTP has grounds for an immediate suspension of or is considering suspending a Certificate of Adequacy, the COTP notifies the person in charge of the intended action. Each notification of a suspension order, whether oral or written, includes—

(1) The grounds for the suspension;

(2) The date when the suspension becomes effective; and

(3) Information on how the suspension may be withdrawn, including all corrective actions required.

(b) If the suspension order is made orally, the COTP issues a suspension order in writing within five days after the initial notification.

### § 158.174 Suspension of a Certificate of Adequacy: Procedure.

(a) If no evidence or arguments are submitted in response to a notification of a suspension order, the suspension is effective on the date stated in the order.

(b) If any petition for withdrawing a suspension order is submitted in response to a notification of a suspension order, the COTP considers the evidence or arguments and notifies the person in charge of any action taken including—

(1) Denial of the petition for withdrawing a suspension order;

(2) Initiation of civil or criminal penalty action under subpart 1.07 of part 1 of this chapter; or

(3) Withdrawing the suspension order.

### § 158.176 Effect of suspension of a Certificate of Adequacy.

After the COTP notifies the person in charge and places a suspension order in effect, the COTP denies entry of ships to the port or terminal while the Certificate of Adequacy is suspended.

### § 158.178 Actions during a suspension.

(a) If a Certificate of Adequacy is suspended for longer than a five day period, the person in charge shall return it to the COTP within five days after the suspension becomes effective.

(b) After the suspension is in effect, the COTP may—

(1) Terminate the suspension order after receiving information from the

person in charge that corrective action has been taken; or

(2) Revoke the Certificate of Adequacy if no significant action is undertaken by the person in charge to meet any measures ordered by the COTP.

### § 158.180 Certificate of Adequacy: Procedures after revocation or the part no longer applies.

(a) If a Certificate of Adequacy is revoked, the person in charge shall return it to the COTP within five days after the revocation becomes effective.

(b) When this part no longer applies to the port or terminal, the person in charge shall return the Certificate of Adequacy to the COTP within 30 days after this part no longer applies.

(c) After the Certificate of Adequacy has been returned to the COTP under paragraph (a) or (b) of this section, an application for a new Certificate of Adequacy may be submitted under § 158.140.

### § 158.190 Appeals.

(a) Any person directly affected by an action taken under this part may request reconsideration by the Coast Guard officer responsible for that action.

(b) Except as provided under paragraph (e) of this section, the person affected who is not satisfied with a ruling after having it reconsidered under paragraph (a) of this section may—

(1) Appeal that ruling in writing within 30 days after the ruling to the Coast Guard District Commander of the district in which the action was taken; and

(2) Supply supporting documentation and evidence that the appellant wishes to have considered.

(c) The District Commander issues a ruling after reviewing the appeal submitted under paragraph (b) of this section. Except as provided under paragraph (e) of this section, the person affected who is not satisfied with this ruling may—

(1) Appeal that ruling in writing within 30 days after the ruling to the Assistant Commandant for Marine Safety, Security and Environmental Protection, U.S. Coast Guard, (CG–5), 2100 2nd St. SW., Stop 7355, Washington, DC 20593–7355; and

(2) Supply supporting documentation and evidence that the appellant wishes to have considered.

(d) After reviewing the appeal submitted under paragraph (c) of this section, the Assistant Commandant for Marine Safety, Security and Environmental Protection issues a ruling which is final agency action.

(e) If the delay in presenting a written appeal has an adverse impact on the operations of the appellant, the appeal under paragraph (b) or (c) of this section—

(1) May be presented orally; and

(2) Must be submitted in writing within five days after the oral presentation—

(i) With the basis for the appeal and a summary of the material presented orally; and

(ii) To the same Coast Guard official who heard the oral presentation.

[CGD 85–010, 52 FR 7761, Mar. 12, 1987, as amended by CGD 96–026, 61 FR 33668, June 28, 1996; CGD 97–023, 62 FR 33364, June 19, 1997; USCG–2002–12471, 67 FR 41333, June 18, 2002; USCG–2010–0351, 75 FR 36286, June 25, 2010]

## Subpart B—Criteria for Reception Facilities: Oily Mixtures

SOURCE: CGD 78–035, 50 FR 36793, Sept. 9, 1985, unless otherwise noted.

### § 158.200 General.

(a) Except as allowed in paragraph (b) of this section, the facility used to meet Regulation 12 of Annex I to MARPOL 73/78 must—

(1) Be a reception facility as defined under § 158.120 that is available at the port or terminal;

(2) Hold each Federal, State, and local permit and license required by environmental laws and regulations concerning oily mixtures; and

(3) Be capable of—

(i) Receiving oily mixtures from oceangoing ships within 24 hours after notice by that ship;

(ii) Completing the reception of ballast water containing oily mixtures from the ship in less than 10 hours after waste transfer operations begin; and

(iii) Completing the reception of other oily mixtures in less than 4 hours after the transfer operation begins.

(b) Reception facilities for ship repair yards do not have to meet paragraphs (a)(3)(i) through (a)(3)(iii) of this section, but must be capable of completing transfer of oily mixtures from each oceangoing ship before the ship departs from the ship repair yard.

[CGD 78–035, 50 FR 36793, Sept. 9, 1985, as amended by CGD 85–010, 52 FR 7764, Mar. 12, 1987; USCG–2000–7641, 66 FR 55574, Nov. 2, 2001]

### § 158.210 Ports and terminals loading crude oil.

The reception facility for a crude oil loading port or terminal must have the capacity for receiving—

(a) Oil residue from on-board fuel and lubricating oil processing in the amount of 10 metric tons (11 short tons);

(b) Bilge water containing oily mixtures in the amount of 10 metric tons (11 short tons) or 2 metric tons (2.2 short tons) multiplied by the daily vessel average, whichever quantity is greater; and

(c) Ballast water containing oily mixtures in the amount of 30% of the deadweight tonnage of the largest of the oceangoing tankers loading crude oil at the port or terminal that do not have clean ballast tanks (CBT), segregated ballast tanks (SBT), or crude oil washing (COW) meeting part 157 of this subchapter, multiplied by one or the daily vessel average, whichever quantity is greater.

[CGD 78–035, 50 FR 36793, Sept. 9, 1985, as amended by CGD 85–010, 52 FR 7764, Mar. 12, 1987; USCG–2000–7641, 66 FR 55574, Nov. 2, 2001]

### § 158.220 Ports and terminals loading more than 1,000 metric tons of oil other than crude oil or bunker oil.

The reception facility for an oil loading port or terminal that loads a daily average of more than 1,000 metric tons (1,100 short tons) of oil other than crude oil or bunker oil to oceangoing tankers must have the capacity for receiving—

(a) Oil residue from on-board fuel and lubricating oil processing in the amount of 10 metric tons (11 short tons);

(b) Bilge water containing oily mixtures in the amount of 10 metric tons (11 short tons) or 2 metric tons (2.2 short tons) multiplied by the daily vessel average, whichever quantity is greater;

(c) Ballast water containing oily mixtures in the amount of 30% of the deadweight tonnage of the largest of the oceangoing tankers loading oil other than crude oil or bunker oil, at the port or terminal, that do not have CBT or SBT meeting part 157 of this chapter, multiplied by one or the daily vessel average, whichever quantity is greater; and

(d) Oil cargo residue in the amount of 0.2% of the total cargo capacity of the largest of the oceangoing tankers loading oil other than crude oil or bunker oil, at the port or terminal, multiplied by one or the daily vessel average, whichever quantity is greater.

[CGD 78–035, 50 FR 36793, Sept. 9, 1985, as amended by CGD 85–010, 52 FR 7764, Mar. 12, 1987; USCG–2000–7641, 66 FR 55574, Nov. 2, 2001]

### § 158.230 Ports and terminals other than ports and terminals under §§ 158.210, 158.220, and 158.240.

Reception facilities for ports and terminals other than those under §§ 158.210, 158.220, and 158.240 of this subpart and those that are used exclusively by non-self-propelled tank barges, must have the capacity for receiving—

(a) Oil residue from on-board fuel and lubricating oil processing in the amount of 10 metric tons (11 short tons), or 1 metric ton (1.1 short tons) multiplied by the daily vessel average, whichever quantity is greater; and

(b) Bilge water containing oily mixtures in the amount of 10 metric tons (11 short tons) or 2 metric tons (2.2 short tons) multiplied by the daily vessel average, whichever quantity is greater.

[CGD 78–035, 50 FR 36793, Sept. 9, 1985, as amended by CGD 85–010, 52 FR 7764, Mar. 12, 1987; USCG–2000–7641, 66 FR 55574, Nov. 2, 2001]

### § 158.240 Ship repair yards.

The reception facility that services oceangoing ships using a ship repair yard must have a capacity for receiving—

(a) An amount of ballast from bunker tanks, and the wash water and oil residue from the cleaning of bunker tanks and oil residue (sludge) tanks, equal to 8 percent of the bunker capacity of the largest oceangoing ship serviced;

(b) An amount of solid oil cargo residues from cargo tanks equal to 0.1 percent of the deadweight tonnage of the largest oceangoing tanker serviced;

(c) An amount of ballast water containing oily mixtures and wash water from in-port tank washing equal to—

(1) 1,500 metric tons (1,650 short tons), or;

(2) 4½% of the deadweight tonnage of the largest oceangoing tanker serviced; and

(d) An amount of liquid oil cargo residue based on the following percentages of deadweight tonnage of the largest oceangoing tanker serviced:

(1) For crude oil oceangoing tankers, 1%.

(2) For black product oceangoing tankers, 0.5%

(3) For white product oceangoing tankers, 0.2%

[CGD 78–035, 50 FR 36793, Sept. 9, 1985, as amended by USCG–2000–7641, 66 FR 55574, Nov. 2, 2001]

### § 158.250 Standard discharge connection.

Each reception facility that received bilge water containing oily mixtures must have a standard discharge connection that—

(a) Meets § 155.430 of this subchapter; and

(b) Attaches to each hose or pipe that removes bilge water containing oily mixtures from oceangoing ships.

[CGD 78–035, 50 FR 36793, Sept. 9, 1985, as amended by USCG–2000–7641, 66 FR 55574, Nov. 2, 2001]

## Subpart C—Criteria for Certifying That a Port's or Terminal's Facilities Are Adequate for Receiving NLS Residue

SOURCE: CGD 85–010, 52 FR 7764, Mar. 12, 1987, unless otherwise noted.

### § 158.300 Purpose.

The purpose of this subpart is to supply the criteria needed for ports and terminals under § 158.110 used by oceangoing ships carrying NLS cargo or NLS residue to meet Regulation 7 of Annex II to MARPOL 73/78.

### § 158.310 Reception facilities: General.

(a) Except as allowed in paragraph (b) of this section, each reception facility, in order to pass the inspection under § 158.160, must—

(1) Be a reception facility as defined under § 158.120;

(2) Be available at the port or terminal;

(3) Meet the requirements of § 158.320;

(4) Hold each Federal, State, and local permit and license required by environmental laws and regulations concerning NLS residue;

(5) Be capable of receiving NLS residue from an oceangoing ship within 24 hours after notice by that ship of the need for reception facilities; and

(6) Be capable of completing the transfer of NLS residue within 10 hours after the transfer of NLS residue begins.

(b) A reception facility for a ship repair yard does not have to meet the requirements of paragraphs (a)(5) and (a)(6) of this section if it is capable of completing transfer of NLS residue from an oceangoing ship before the ship departs from the yard.

### § 158.320 Reception facilities: Capacity, and exceptions.

(a) Except as allowed in paragraph (b) of this section, each day the port or terminal is in operation, the port or terminal must have a reception facility that is capable of receiving—

(1) 75 cubic meters (19,810 gallons) of NLS residue for each regulated NLS cargo that is a solidifying Category A NLS; or

(2) 50 cubic meters (13,210 gallons) of NLS residue for each regulated NLS cargo that is not a solidifying Category A.

(b) The port or terminal need only meet § 158.330 if it is used by ships that only transfer Category B or C NLS cargoes that are not high viscosity or solidifying Category B or C NLSs.

(c) For each category of NLS cargo carried on a ship, each day a ship repair yard is in operation and being used

by a ship that must discharge NLS residue in order to proceed with repair work, the ship repair yard must have a reception facility that is capable of receiving—

(1) 50 cubic meters (13,210 gallons) of NLS residue that contains a—

(i) Category A NLS that is not a solidifying NLS;

(ii) Category B NLS; or

(iii) Category C NLS; or

(iv) Category D NLS; or

(2) 75 cubic meters (19,810 gallons) of NLS residue that contains a Category A NLS that is a solidifying NLS cargo.

### § 158.330 Ports and terminals: Equipment.

Each port and terminal except ship repair yards, in order to pass the inspection under § 158.160, must—

(a) At mean low tide and with the ship's manifold 10 feet above the surface of the water, be capable of receiving Category B or C NLS cargo during the stripping operations at an average flow rate of 6 cubic meters (1584 gallons) per hour without the backpressure at the ship's manifold exceeding 101.6 kPa (14.7 pounds per square inch gauge) pressure; and

(b) Have an instruction manual that lists the equipment and procedures for meeting paragraph (a) of this section. The instruction manual may be made part of the operations manual that is required under § 154.300 of this chapter.

## Subpart D—Criteria for Adequacy of Reception Facilities: Garbage

SOURCE: CGD 88–002, 54 FR 18409, Apr. 28, 1989, unless otherwise noted.

### § 158.400 Purpose.

The purpose of this subpart is to supply the criteria for determining the adequacy of reception facilities for garbage at ports and terminals that receive ships and to comply with the Act and Regulation 7 of Annex V to MARPOL 73/78.

### § 158.410 Reception facilities: General.

(a) Except as allowed in paragraph (b) of this section, the person in charge of a port or terminal shall ensure that each port or terminal's reception facility.

(1) Is capable after August 28, 1989 of receiving APHIS regulated garbage at a port or terminal no later than 24 hours after notice under § 151.65 of this chapter is given to the port or terminal, unless it only receives ships that—

(i) Operate exclusively within the navigable waters of the United States;

(ii) Operate exclusively between ports or terminals in the continental United States; or

(iii) Operate exclusively between continental United States ports or terminals and Canadian ports or terminals.

(2) Is capable of receiving medical wastes or hazardous wastes defined in 40 CFR 261.3, unless the port or terminal operator can provide to the master, operator, or person in charge of a ship, a list of persons authorized by federal, state, or local law or regulation to transport and treat such wastes;

(3) Is arranged so that it does not interfere with port or terminal operations;

(4) Is conveniently located so that mariners unfamiliar with the port or terminal can find it easily and so that it's use will not be discouraged;

(5) Is situated so that garbage from ships which has been placed in it cannot readily enter the water; and

(6) Holds each federal, state, and local permit or license required by environmental and public health laws and regulations concerning garbage handling.

(b) A reception facility for a ship repair yard does not have to meet the requirements of paragraph (a)(1) of this section if it is capable of handling the transfer of garbage from a ship before the ship departs from the yard.

NOTE: The U.S. Department of Agriculture's Animal and Plant Health Inspection Service (APHIS) requires victual wastes or garbage contaminated by victual wastes, except from vessels that operate only between the continental United States and Canadian ports, to be incinerated or sterilized in accordance with their regulations in 7 CFR 330.400 and 9 CFR 94.5.

### § 158.420 Reception facilities: Capacity and exceptions.

Each day a port or terminal is in operation, the person in charge of a port or terminal must provide, or ensure the

availability of, a reception facility that is capable of receiving all garbage that the master or person who is in charge of a ship desires to discharge, except—

(a) Large quantities of spoiled or damaged cargoes not usually discharged by a ship; or

(b) Garbage from ships not having commercial transactions with that port or terminal.

## Subpart E—Port and Terminal Operations

SOURCE: CGD 85–010, 52 FR 7765, Mar. 12, 1987, unless otherwise noted. Redesignated by CGD 88–002, 54 FR 18409, Apr. 28, 1989.

### § 158.500 Draining cargo area and piping systems.

The person in charge shall ensure that each cargo hose and each piping system containing NLS received from each oceangoing ship carrying NLS cargo is not drained back into the ship.

### § 158.520 Following the instruction manual.

The person in charge shall ensure that the instruction manual under § 158.330(b) is followed during the transfer of any NLS.

# PART 159—MARINE SANITATION DEVICES

## Subpart A—General

Sec.
159.1 Purpose.
159.3 Definitions.
159.4 Incorporation by reference.
159.5 Requirements for vessel manufacturers.
159.7 Requirements for vessel operators.

## Subpart B—Certification Procedures

159.11 Purpose.
159.12 Regulations for certification of existing devices.
159.12a Certification of certain Type III devices.
159.14 Application for certification.
159.15 Certification.
159.16 Authorization to label devices.
159.17 Changes to certified devices.
159.19 Testing equivalency.

## Subpart C—Design, Construction, and Testing

159.51 Purpose and scope.
159.53 General requirements.
159.55 Identification.
159.57 Installation, operation, and maintenance instructions.
159.59 Placard.
159.61 Vents.
159.63 Access to parts.
159.65 Chemical level indicator.
159.67 Electrical component ratings.
159.69 Motor ratings.
159.71 Electrical controls and conductors.
159.73 Conductors.
159.75 Overcurrent protection.
159.79 Terminals.
159.81 Baffles.
159.83 Level indicator.
159.85 Sewage removal.
159.87 Removal fittings.
159.89 Power interruption: Type I and II devices.
159.93 Independent supporting.
159.95 Safety.
159.97 Safety: inspected vessels.
159.101 Testing: general.
159.103 Vibration test.
159.105 Shock test.
159.107 Rolling test.
159.109 Pressure test.
159.111 Pressure and vacuum pulse test.
159.115 Temperature range test.
159.117 Chemical resistance test.
159.119 Operability test; temperature range.
159.121 Sewage processing test.
159.123 Coliform test: Type I devices.
159.125 Visible floating solids: Type I devices.
159.126 Coliform test: Type II devices.
159.126a Suspended solids test: Type II devices.
159.127 Safety coliform count: Recirculating devices.
159.129 Safety: Ignition prevention test.
159.131 Safety: Incinerating device.

## Subpart D—Recognition of Facilities

159.201 Recognition of facilities.

## Subpart E—Discharge of Effluents in Certain Alaskan Waters by Cruise Vessel Operations

159.301 Purpose.
159.303 Applicability.
159.305 Definitions.
159.307 Untreated sewage.
159.309 Limitations on discharge of treated sewage or graywater.
159.311 Safety exception.
159.313 Inspection for compliance and enforcement.
159.315 Sewage and graywater discharge record book.

159.317 Sampling and reporting.
159.319 Fecal coliform and total suspended solids standards.
159.321 Enforcement.

AUTHORITY: 33 U.S.C. 1322(b)(1); 49 CFR 1.45(b). Subpart E also issued under authority of sec. 1(a)(4), Pub. L. 106–554, 114 Stat. 2763; Department of Homeland Security Delegation No. 0170.1.

SOURCE: CGD 73–83, 40 FR 4624, Jan. 30, 1975, unless otherwise noted.

EDITORIAL NOTE: Nomenclature changes to part 159 appear by USCG–2008–0179, 73 FR 35015, June 19, 2008.

## Subpart A—General

### § 159.1 Purpose.

This part prescribes regulations governing the design and construction of marine sanitation devices and procedures for certifying that marine sanitation devices meet the regulations and the standards of the Environmental Protection Agency promulgated under section 312 of the Federal Water Pollution Control Act (33 U.S.C. 1322), to eliminate the discharge of untreated sewage from vessels into the waters of the United States, including the territorial seas. Subpart A of this part contains regulations governing the manufacture and operation of vessels equipped with marine sanitation devices.

### § 159.3 Definitions.

In this part:

*Coast Guard* means the Commandant or his authorized representative.

*Discharge* includes, but is not limited to, any spilling, leaking, pouring, pumping, emitting, emptying, or dumping.

*Existing vessel* includes any vessel, the construction of which was initiated before January 30, 1975.

*Fecal coliform* bacteria are those organisms associated with the intestine of warm-blooded animals that are commonly used to indicate the presence of fecal material and the potential presence of organisms capable of causing human disease.

*Inspected vessel* means any vessel that is required to be inspected under 46 CFR Ch. I.

*Length* means a straight line measurement of the overall length from the foremost part of the vessel to the aftermost part of the vessel, measured parallel to the centerline. Bow sprits, bumpkins, rudders, outboard motor brackets, and similar fittings or attachments are not to be included in the measurement.

*Manufacturer* means any person engaged in manufacturing, assembling, or importing of marine sanitation devices or of vessels subject to the standards and regulations promulgated under section 312 of the Federal Water Pollution Control Act.

*Marine sanitation device* and *device* includes any equipment for installation on board a vessel which is designed to receive, retain, treat, or discharge sewage, and any process to treat such sewage.

*New vessel* includes any vessel, the construction of which is initiated on or after January 30, 1975.

*Person* means an individual, partnership, firm, corporation, or association, but does not include an individual on board a public vessel.

*Public vessel* means a vessel owned or bare-boat chartered and operated by the United States, by a State or political subdivision thereof, or by a foreign nation, except when such vessel is engaged in commerce.

*Recognized facility* means any laboratory or facility listed by the Coast Guard as a recognized facility under this part.

*Sewage* means human body wastes and the wastes from toilets and other receptacles intended to receive or retain body waste.

*Territorial seas* means the belt of the seas measured from the line of ordinary low water along that portion of the coast which is in direct contact with the open sea and the line marking the seaward limit of inland waters, and extending seaward a distance of 3 miles.

*Type I marine sanitation device* means a device that, under the test conditions described in §§ 159.123 and 159.125, produces an effluent having a fecal coliform bacteria count not greater than 1,000 per 100 milliliters and no visible floating solids.

*Type II marine sanitation device* means a device that, under the test conditions

described in §§ 159.126 and 159.126a, produces an effluent having a fecal coliform bacteria count not greater than 200 per 100 milliliters and suspended solids not greater than 150 milligrams per liter.

*Type III marine sanitation device* means a device that is designed to prevent the overboard discharge of treated or untreated sewage or any waste derived from sewage.

*Uninspected vessel* means any vessel that is not required to be inspected under 46 CFR Chapter I.

*United States* includes the States, the District of Columbia, the Commonwealth of Puerto Rico, the Virgin Islands, Guam, American Samoa, the Canal Zone, and the Trust Territory of the Pacific Islands.

*Vessel* includes every description of watercraft or other artificial contrivance used, or capable of being used, as a means of transportation on the waters of the United States.

[CGD 96–026, 61 FR 33668, June 28, 1996, as amended by CGD 95–028, 62 FR 51194, Sept. 30, 1997]

### § 159.4 Incorporation by reference.

(a) Certain material is incorporated by reference into this part with the approval of the Director of the Federal Register under 5 U.S.C. 552(a) and 1 CFR part 51. To enforce any edition other than that specified in paragraph (b) of this section, the Coast Guard must publish notice of change in the FEDERAL REGISTER; and the material must be available to the public. All approved material is available for inspection at the Engineering Division, U.S. Coast Guard Marine Safety Center, 2100 2nd St. SW., Stop 7102, Washington, DC 20593–7102, and at the National Archives and Records Administration (NARA). For information on the availability of this material at NARA, call 202–741–6030, or go to: *http://www.archives.gov/federal_register/code_of_federal_regulations/ibr_locations.html*. All approved material is available from the sources indicated in paragraph (b) of this section.

(b) The material approved for incorporation by reference in this part, and the sections affected, are as follows:

*American Society for Testing and Materials (ASTM)*

100 Barr Harbor Drive, West Conshohocken, PA 19428–2959.

ASTM E 11–95, Standard Specification for Wire Cloth and Sieves for Testing Purposes—159.125

[USCG–1999–5151, 64 FR 67176, Dec. 1, 1999, as amended by USCG–2001–9286, 66 FR 33641, June 25, 2001; 69 FR 18803, Apr. 9, 2004; USCG–2010–0351, 75 FR 36286, June 25, 2010]

### § 159.5 Requirements for vessel manufacturers.

No manufacturer may manufacture for sale, sell, offer for sale, or distribute for sale or resale any vessel equipped with installed toilet facilities unless it is equipped with:

(a) An operable Type II or III device that has a label on it under § 159.16 or that is certified under § 159.12 or § 159.12a; or

(b) An operable Type I device that has a label on it under § 159.16 or that is certified under § 159.12, if the vessel is 19.7 meters (65 feet) or less in length.

[CGD 95–028, 62 FR 51194, Sept. 30, 1997]

### § 159.7 Requirements for vessel operators.

(a) No person may operate any vessel equipped with installed toilet facilities unless it is equipped with:

(1) An operable Type II or III device that has a label on it under § 159.16 or that is certified under § 159.12 or § 159.12a; or

(2) An operable Type I device that has a label on it under § 159.16 or that is certified under § 159.12, if the vessel is 19.7 meters (65 feet) or less in length.

(b) When operating a vessel on a body of water where the discharge of treated or untreated sewage is prohibited by the Environmental Protection Agency under 40 CFR 140.3 or 140.4, the operator must secure each Type I or Type II device in a manner which prevents discharge of treated or untreated sewage. Acceptable methods of securing the device include—

(1) Closing the seacock and removing the handle;

(2) Padlocking the seacock in the closed position;

(3) Using a non-releasable wire-tie to hold the seacock in the closed position; or

(4) Locking the door to the space enclosing the toilets with a padlock or door handle key lock.

(c) When operating a vessel on a body of water where the discharge of untreated sewage is prohibited by the Environmental Protection Agency under 40 CFR 140.3, the operator must secure each Type III device in a manner which prevents discharge of sewage. Acceptable methods of securing the device include—

(1) Closing each valve leading to an overboard discharge and removing the handle;

(2) Padlocking each valve leading to an overboard discharge in the closed position; or

(3) Using a non-releasable wire-tie to hold each valve leading to an overboard discharge in the closed position.

[CGH 95–028, 62 FR 51194, Sept. 30, 1997]

## Subpart B—Certification Procedures

### § 159.11 Purpose.

This subpart prescribes procedures for certification of marine sanitation devices and authorization for labels on certified devices.

### § 159.12 Regulations for certification of existing devices.

(a) The purpose of this section is to provide regulations for certification of existing devices until manufacturers can design and manufacture devices that comply with this part and recognized facilities are prepared to perform the testing required by this part.

(b) Any Type III device that was installed on an existing vessel before January 30, 1975, is considered certified.

(c) Any person may apply to the Commanding Officer, USCG Marine Safety Center, 2100 2nd St. SW., Stop 7102, Washington, DC 20593–7102 for certification of a marine sanitation device manufactured before January 30, 1976. The Coast Guard will issue a letter certifying the device if the applicant shows that the device meets § 159.53 by:

(1) Evidence that the device meets State standards at least equal to the standards in § 159.53, or

(2) Test conducted under this part by a recognized laboratory, or

(3) Evidence that the device is substantially equivalent to a device certified under this section, or

(4) A Coast Guard field test if considered necessary by the Coast Guard.

(d) The Coast Guard will maintain and make available a list that identifies each device certified under this section.

(e) Devices certified under this section in compliance with § 159.53 need not meet the other regulations in this part and may not be labeled under § 159.16.

[CGD 73–83, 40 FR 4624, Jan. 30, 1975, as amended by CGD 75–213, 41 FR 15325, Apr. 12, 1976; CGD 82–063a, 48 FR 4776, Feb. 3, 1983; CGD 88–052, 53 FR 25122, July 1, 1988; CGD 96–026, 61 FR 33668, June 28, 1996; USCG–2001–9286, 66 FR 33641, June 25, 2001; USCG–2010–0351, 75 FR 36286, June 25, 2010]

### § 159.12a Certification of certain Type III devices.

(a) The purpose of this section is to provide regulations for certification of certain Type III devices.

(b) Any Type III device is considered certified under this section if:

(1) It is used solely for the storage of sewage and flushwater at ambient air pressure and temperature; and

(2) It is in compliance with § 159.53(c).

(c) Any device certified under this section need not comply with the other regulations in this part except as required in paragraphs (b)(2) and (d) of this section and may not be labeled under § 159.16.

(d) Each device certified under this section which is installed aboard an inspected vessel must comply with § 159.97.

[CGD 76–145, 42 FR 11, Jan. 3, 1977]

### § 159.14 Application for certification.

(a) Any manufacturer may apply to any recognized facility for certification of a marine sanitation device. The application for certification must indicate whether the device will be used aboard all vessels or only aboard uninspected vessels and to which standard in § 159.53 the manufacturer requests the device to be tested.

(b) An application may be in any format but must be in writing and must

be signed by an authorized representative of the manufacturer and include or be accompanied by:

(1) A complete description of the manufacturer's production quality control and inspection methods, record keeping systems pertaining to the manufacture of marine sanitation devices, and testing procedures;

(2) The design for the device, including drawings, specifications and other information that describes the materials, construction and operation of the device;

(3) The installation, operation, and maintenance instructions for the device; and

(4) The name and address of the applicant and the manufacturing facility.

(c) The manufacturer must furnish the recognized facility one device of each model for which certification is requested and samples of each material from which the device is constructed, that must be tested destructively under § 159.117. The device furnished is for the testing required by this part except that, for devices that are not suited for unit testing, the manufacturer may submit the design so that the recognized facility may determine the components of the device and materials to be submitted for testing and the tests to be performed at a place other than the facility. The Coast Guard must review and accept all such determinations before testing is begun.

(d) At the time of submittal of an application to a recognized facility the manufacturer must notify the Coast Guard of the type and model of the device, the name of the recognized facility to which application is being made, and the name and address of the manufacturer, and submit a signed statement of the times when the manufacturer will permit designated officers and employees of the Coast Guard to have access to the manufacturer's facilities and all records required by this part.

[CGD 73–83, 40 FR 4624, Jan. 30, 1975, as amended by CGD 75–213, 41 FR 15325, Apr. 12, 1976]

### § 159.15 Certification.

(a) The recognized facility must evaluate the information that is submitted by the manufacturer in accordance with § 159.14(b) (1), (2), and (3), evaluate the device for compliance with §§ 159.53 through 159.95, test the device in accordance with § 159.101 and submit to the Commanding Officer, USCG Marine Safety Center, 2100 2nd St. SW., Stop 7102, Washington, DC 20593–7102 the following:

(1) The information that is required under § 159.14(b);

(2) A report on compliance evaluation;

(3) A description of each test;

(4) Test results; and

(5) A statement, that is signed by the person in charge of testing, that the test results are accurate and complete.

(b) The Coast Guard certifies a test device, on the design of the device, if it determines, after consideration of the information that is required under paragraph (a) of this section, that the device meets the requirements in Subpart C of this part.

(c) The Coast Guard notifies the manufacturer and recognized facility of its determination under paragraph (b) of this section. If the device is certified, the Coast Guard includes a certification number for the device. If certification is denied, the Coast Guard notifies the manufacturer and recognized facility of the requirements of this part that are not met. The manufacturer may appeal a denial to the Commanding Officer, USCG Marine Safety Center, 2100 2nd St. SW., Stop 7102, Washington, DC 20593–7102.

(d) If upon re-examination of the test device, the Coast Guard determines that the device does not in fact comply with the requirements of Subpart C of this part, it may terminate the certification.

[CGD 73–83, 40 FR 4624, Jan. 30, 1975, as amended by CGD 75–213, 41 FR 15326, Apr. 12, 1976; CGD 82–063a, 48 FR 4776, Feb. 3, 1983; CGD 88–052, 53 FR 25122, July 1, 1988; CGD 96–026, 61 FR 33668, June 28, 1996; USCG–2001–9286, 66 FR 33641, June 25, 2001; USCG–2010–0351, 75 FR 36286, June 25, 2010]

### § 159.16 Authorization to label devices.

(a) When a test device is certified under § 159.15(b), the Coast Guard will issue a letter that authorizes the manufacturer to label each device that he manufactures with the manufacturer's certification that the device is in all

material respects substantially the same as a test device certified by the U.S. Coast Guard pursuant to section 312 of the Federal Water Pollution Control Act Amendments of 1972.

(b) Certification placed on a device by its manufacturer under this section is the certification required by section 312(h)(4) of the Federal Water Pollution Control Act Amendments of 1972, which makes it unlawful for a vessel that is subject to the standards and regulations promulgated under the Act to operate on the navigable waters of the United States, if such vessel is not equipped with an operable marine sanitation device certified pursuant to section 312 of the Act.

(c) Letters of authorization issued under this section are valid for 5 years, unless sooner suspended, withdrawn, or terminated and may be reissued upon written request of the manufacturer to whom the letter was issued.

(d) The Coast Guard, in accordance with the procedure in 46 CFR 2.75, may suspend, withdraw, or terminate any letter of authorization issued under this section if the Coast Guard finds that the manufacturer is engaged in the manufacture of devices labeled under this part that are not in all material respects substantially the same as a test device certified pursuant to this part.

### § 159.17 Changes to certified devices.

(a) The manufacturer of a device that is certified under this part shall notify the Commanding Officer, USCG Marine Safety Center, 2100 2nd St. SW., Stop 7102, Washington, DC 20593–7102 in writing of any change in the design of the device.

(b) A manufacturer shall include with a notice under paragraph (a) of this section a description of the change, its advantages, and the recommendation of the recognized facility as to whether the device remains in all material respects substantially the same as the original test device.

(c) After notice under paragraph (a) of this section, the Coast Guard notifies the manufacturer and the recognized facility in writing of any tests that must be made for certification of the device or for any change in the letter of authorization. The manufacturer may appeal this determination to the Commandant (CG–52), 2100 2nd St. SW., Stop 7126, Washington, DC 20593–7126.

[CGD 73–83, 40 FR 4624, Jan. 30, 1975, as amended by CGD 82–063a, 48 FR 4776, Feb. 3, 1983; CGD 88–052, 53 FR 25122, July 1, 1988; CGD 96–026, 61 FR 33668, June 28, 1996; USCG–2001–9286, 66 FR 33641, June 25, 2001; USCG–2010–0351, 75 FR 36286, June 25, 2010]

### § 159.19 Testing equivalency.

(a) If a test required by this part may not be practicable or necessary, a manufacturer may apply to the Commanding Officer, USCG Marine Safety Center, 2100 2nd St. SW., Stop 7102, Washington, DC 20593–7102 for deletion or approval of an alternative test as equivalent to the test requirements in this part. The application must include the manufacturer's justification for deletion or the alternative test and any alternative test data.

(b) The Coast Guard notifies the manufacturer of its determination under paragraph (a) of this section and that determination is final.

[CGD 73–83, 40 FR 4624, Jan. 30, 1975, as amended by CGD 82–063a, 48 FR 4776, Feb. 3, 1983; CGD 88–052, 53 FR 25122, July 1, 1988; CGD 96–026, 61 FR 33668, June 28, 1996; USCG–2001–9286, 66 FR 33641, June 25, 2001; USCG–2010–0351, 75 FR 36286, June 25, 2010]

## Subpart C—Design, Construction, and Testing

### § 159.51 Purpose and scope.

(a) This subpart prescribes regulations governing the design and construction of marine sanitation devices.

(b) Unless otherwise authorized by the Coast Guard each device for which certification under this part is requested must meet the requirements of this subpart.

### § 159.53 General requirements.

A device must:

(a) Under the test conditions described in §§ 159.123 and 159.125, produce an effluent having a fecal coliform bacteria count not greater than 1,000 per 100 milliliters and no visible floating solids (Type I),

(b) Under the test conditions described in §§ 159.126 and 159.126a, produce an effluent having a fecal coliform bacteria count not greater than

200 per 100 milliliters and suspended solids not greater than 150 milligrams per liter (Type II), or

(c) Be designed to prevent the overboard discharge of treated or untreated sewage or any waste derived from sewage (Type III).

[CGD 73–83, 40 FR 4624, Jan. 30, 1975, as amended by CGD 75–213, 41 FR 15325, Apr. 12, 1976]

### § 159.55 Identification.

(a) Each production device must be legibly marked in accordance with paragraph (b) of this section with the following information:

(1) The name of the manufacturer.

(2) The name and model number of the device.

(3) The month and year of completion of manufacture.

(4) Serial number.

(5) Whether the device is certified for use on an inspected or an uninspected vessel.

(6) Whether the device is Type I, II, or III.

(b) The information required by paragraph (a) of this section must appear on a nameplate attached to the device or in lettering on the device. The nameplate or lettering stamped on the device must be capable of withstanding without loss of legibility the combined effects of normal wear and tear and exposure to water, salt spray, direct sunlight, heat, cold, and any substance listed in § 159.117(b) and (c). The nameplate and lettering must be designed to resist efforts to remove them from the device or efforts to alter the information stamped on the nameplate or the device without leaving some obvious evidence of the attempted removal or alteration.

[CGD 73–83, 40 FR 4624, Jan. 30, 1975, as amended by CGD 75–213, 41 FR 15325, Apr. 12, 1976]

### § 159.57 Installation, operation, and maintenance instructions.

(a) The instructions supplied by the manufacturer must contain directions for each of the following:

(1) Installation of the device in a manner that will permit ready access to all parts of the device requiring routine service and that will provide any flue clearance necessary for fire safety.

(2) Safe operation and servicing of the device so that any discharge meets the applicable requirements of § 159.53.

(3) Cleaning, winter layup, and ash or sludge removal.

(4) Installation of a vent or flue pipe.

(5) The type and quantity of chemicals that are required to operate the device, including instructions on the proper handling, storage and use of these chemicals.

(6) Recommended methods of making required plumbing and electrical connections including fuel connections and supply circuit overcurrent protection.

(b) The instructions supplied by the manufacturer must include the following information:

(1) The name of the manufacturer.

(2) The name and model number of the device.

(3) Whether the device is certified for use on an inspected, or uninspected vessel.

(4) A complete parts list.

(5) A schematic diagram showing the relative location of each part.

(6) A wiring diagram.

(7) A description of the service that may be performed by the user without coming into contact with sewage or chemicals.

(8) Average and peak capacity of the device for the flow rate, volume, or number of persons that the device is capable of serving and the period of time the device is rated to operate at peak capacity.

(9) The power requirements, including voltage and current.

(10) The type and quantity of fuel required.

(11) The duration of the operating cycle for unitized incinerating devices.

(12) The maximum angles of pitch and roll at which the device operates in accordance with the applicable requirements of § 159.53.

(13) Whether the device is designed to operate in salt, fresh, or brackish water.

(14) The maximum hydrostatic pressure at which a pressurized sewage retention tank meets the requirements of § 159.111.

(15) The maximum operating level of liquid retention components.

(16) Whether the device is Type I, II, or III.

(17) A statement as follows:

NOTE: The EPA standards state that in freshwater lakes, freshwater reservoirs or other freshwater impoundments whose inlets or outlets are such as to prevent the ingress or egress by vessel traffic subject to this regulation, or in rivers not capable of navigation by interstate vessel traffic subject to this regulation, marine sanitation devices certified by the U.S. Coast Guard installed on all vessels shall be designed and operated to prevent the overboard discharge of sewage, treated or untreated, or of any waste derived from sewage. The EPA standards further state that this shall not be construed to prohibit the carriage of Coast Guard-certified flow-through treatment devices which have been secured so as to prevent such discharges. They also state that waters where a Coast Guard-certified marine sanitation device permitting discharge is allowed include coastal waters and estuaries, the Great Lakes and interconnected waterways, freshwater lakes and impoundments accessible through locks, and other flowing waters that are navigable interstate by vessels subject to this regulation (40 CFR 140.3).

[CGD 73–83, 40 FR 4624, Jan. 30, 1975, as amended by CGD 75–213, 41 FR 15325, Apr. 12, 1976]

### § 159.59 Placard.

Each device must have a placard suitable for posting on which is printed the operating instructions, safety precautions, and warnings pertinent to the device. The size of the letters printed on the placard must be one-eighth of an inch or larger.

### § 159.61 Vents.

Vents must be designed and constructed to minimize clogging by either the contents of the tank or climatic conditions such as snow or ice.

### § 159.63 Access to parts.

Each part of the device that is required by the manufacturer's instructions to be serviced routinely must be readily accessible in the installed position of the device recommended by the manufacturer.

### § 159.65 Chemical level indicator.

The device must be equipped with one of the following:

(a) A means of indicating the amount in the device of any chemical that is necessary for its effective operation.

(b) A means of indicating when chemicals must be added for the proper continued operation of the device.

### § 159.67 Electrical component ratings.

Electrical components must have current and voltage ratings equal to or greater than the maximum load they may carry.

### § 159.69 Motor ratings.

Motors must be rated to operate at 50 °C ambient temperature.

### § 159.71 Electrical controls and conductors.

Electrical controls and conductors must be installed in accordance with good marine practice. Wire must be copper and must be stranded. Electrical controls and conductors must be protected from exposure to chemicals and sewage.

### § 159.73 Conductors.

Current carrying conductors must be electrically insulated from non-current carrying metal parts.

### § 159.75 Overcurrent protection.

Overcurrent protection must be provided within the unit to protect subcomponents of the device if the manufacturer's recommended supply circuit overcurrent protection is not adequate for these subcomponents.

### § 159.79 Terminals.

Terminals must be solderless lugs with ring type or captive spade ends, must have provisions for being locked against movement from vibration, and must be marked for identification on the wiring diagram required in § 159.57. Terminal blocks must be nonabsorbent and securely mounted. Terminal blocks must be provided with barrier insulation that prevents contact between adjacent terminals or metal surfaces.

### § 159.81 Baffles.

Baffles in sewage retention tanks, if any, must have openings to allow liquid and vapor to flow freely across the top and bottom of the tank.

**§ 159.83 Level indicator.**

Each sewage retention device must have a means of indicating when the device is more than ¾ full by volume.

**§ 159.85 Sewage removal.**

The device must be designed for efficient removal of nearly all of the liquid and solids in the sewage retention tank.

**§ 159.87 Removal fittings.**

If sewage removal fittings or adapters are provided with the device, they must be of either 1½″ or 4″ nominal pipe size.

**§ 159.89 Power interruption: Type I and II devices.**

A discharge device must be designed so that a momentary loss of power during operation of the device does not allow a discharge that does not meet the requirements in § 159.53.

[CGD 73–83, 40 FR 4624, Jan. 30, 1975, as amended by CGD 75–213, 41 FR 15326, Apr. 12, 1976]

**§ 159.93 Independent supporting.**

The device must have provisions for supporting that are independent from connecting pipes.

**§ 159.95 Safety.**

(a) Each device must—

(1) Be free of design defects such as rough or sharp edges that may cause bodily injuries or that would allow toxic substances to escape to the interior of the vessel;

(2) Be vented or provided with a means to prevent an explosion or over pressurization as a result of an accumulation of gases; and

(3) Meet all other safety requirements of the regulations applicable to the type of vessel for which it is certified.

(b) A chemical that is specified or provided by the manufacturer for use in the operation of a device and is defined as a hazardous material in 46 CFR part 146 must be certified by the procedures in 46 CFR part 147.

(c) Current carrying components must be protected from accidental contact by personnel operating or routinely servicing the device. All current carrying components must as a minimum be of drip-proof construction or be enclosed within a drip-proof compartment.

**§ 159.97 Safety: inspected vessels.**

The Commanding Officer, USCG Marine Safety Center, approves the design and construction of devices to be certified for installation and operation on board inspected vessels on the basis of tests and reports of inspection under the applicable marine engineering requirements in subchapter F of Title 46, Code of Federal Regulations, and under the applicable electrical engineering requirements in subchapter J of Title 46 Code of Federal Regulations.

[CGD 73–83, 40 FR 4624, Jan. 30, 1975, as amended by CGD 75–213, 41 FR 15326, Apr. 12, 1976; USCG–2001–9286, 66 FR 33641, June 25, 2001]

**§ 159.101 Testing: general.**

Unless otherwise authorized by the Coast Guard, a recognized facility must perform each test described in §§ 159.103 through 159.131. The same device must be used for each test and tested in the order in which the tests are described. There must be no cracking, softening, deterioration, displacement, breakage, leakage or damage of components or materials that affects the operation or safety of the device after each test described in §§ 159.103 through 159.117 and § 159.121, and the device must remain operable after the test described in § 159.119. The device must be set up in a manner simulating installation on a vessel in accordance with the manufacturer's instructions with respect to mounting, water supply, and discharge fittings.

[CGD 73–83, 40 FR 4624, Jan. 30, 1975, as amended by CGD 75–213, 41 FR 15326, Apr. 12, 1976]

**§ 159.103 Vibration test.**

The device, with liquid retention components, if any, filled with water to one-half of their volume, must be subjected to a sinusoidal vibration for a period of 12 hours, 4 hours in each of the x, y, and z planes, at the resonant frequency of the device (or at 55 cycles per second if there is no resonant frequency between 10 to 60 hertz) and with

a peak amplitude of 0.019 to 0.021 inches.

### § 159.105 Shock test.

The device, with liquid retention components, if any, filled with water to half of their volume, must be subjected to 1,000 vertical shocks that are ten times the force of gravity (10g) and have a duration of 20–25 milliseconds measured at the base of the half-sine shock envelope.

### § 159.107 Rolling test.

(a) The device, with liquid retention components, if any, filled with water to half of their volume, must be subjected to 100 cycles with the axis of rotation 4 feet from the centerline of the device, no more than 6 inches below the plane of the bottom of the device, and parallel to any tank baffles. The device must then be rotated 90 degrees on its vertical axis and subjected to another 100 cycles. This testing must be repeated with the liquid retention components filled to the maximum operating level as specified by the manufacturer in § 159.57.

(b) Eighty percent of the rolling action must be approximately 15 degrees on either side of the vertical and at a cyclic rate of 3 to 4 seconds. Twenty percent motions must be approximately 30 degrees, or the maximum angle specified by the manufacturer under § 159.57, whichever is greater, on either side of the vertical at a cyclic rate of 6 to 8 seconds.

### § 159.109 Pressure test.

Any sewage retention tank that is designed to operate under pressure must be pressurized hydrostatically at a pressure head of 7 feet or to 150 percent of the maximum pressure specified by the manufacturer for operation of the tank, whichever is greater. The tank must hold the water at this pressure for 1 hour with no evidence of leaking.

### § 159.111 Pressure and vacuum pulse test.

Liquid retention components of the device with manufacturer specified venting installed must be subjected to 50 fillings of water at a pressure head of 7 feet or the maximum pressure specified by the manufacturer for operation of the device, whichever is greater, and then emptied with a 45 gallon per minute or larger positive displacement pump that remains in operation 30 seconds after emptying the tank at the end of each cycle.

### § 159.115 Temperature range test.

(a) The device must be held at a temperature of 60 °C or higher for a period of 16 hours.

(b) The device must be held at a temperature of −40 °C or less for a period of 16 hours following winterization in accordance with manufacturers' instructions.

### § 159.117 Chemical resistance test.

(a) In each case where the recognized facility doubts the ability of a material to withstand exposure to the substances listed in paragraphs (b) and (c) of this section a sample of the material must be tested.

(b) A sample referred to in paragraph (a) of this section must be partially submerged in each of the following substances for 100 hours at an ambient temperature of 22 °C.

(1) Sewage.

(2) Any disinfectant that is required in the operation of the device.

(3) Any chemical compound in solid, liquid or gaseous form, used, emitted or produced in the operation of the device.

(4) Fresh or salt (3.5 percent Sodium Chloride) flush water.

(5) Toilet bowl cleaners.

(6) Engine Oil (SAE/30).

(7) Ethylene Glycol.

(8) Detergents (household and bilge cleaning type).

(c) A sample of the material must be doused 20 times, with a 1 hour drying period between dousings, in each of the following substances:

(1) Gasoline.

(2) Diesel fuel.

(3) Mineral spirits.

(4) Turpentine.

(5) Methyl alcohol.

### § 159.119 Operability test; temperature range.

The device must operate in an ambient temperature of 5 °C with inlet operating fluid temperature varying from 2

°C to 32 °C and in an ambient temperature of 50 °C with inlet operating fluid temperature varying from 2 °C to 32 °C.

### § 159.121 Sewage processing test.

(a) The device must process human sewage in the manner for which it is designed when tested in accordance with this section. There must be no sewage or sewage-treating chemicals remaining on surfaces or in crevices that could come in contact with a person using the device or servicing the device in accordance with the instructions supplied under § 159.57(b)(7).

(b) During the test the device must be operated and maintained in accordance with the manufacturer's instructions. Any initial start-up time specified by the manufacturer must be allowed before test periods begin. For 1 hour of each 8-hour test period, the device must be tilted to the maximum angles specified by the manufacturer under §§ 159.55 and 159.57.

(c) Except for devices described in paragraph (d) of this section, the devices must process and discharge or store human sewage over at least an 8-consecutive hour period on at least 10 days within a 20-day period. The device must receive human sewage consisting of fecal matter, urine, and toilet paper in a ratio of four urinations to one defecation with at least one defecation per person per day. Devices must be tested at their average rate of capacity as specified in § 159.57. In addition, during three periods of each day the system must process sewage at the peak capacity for the period of time it is rated at peak capacity.

(d) A device that processes and discharges continuously between individual use periods or a large device, as determined by the Coast Guard, must process and discharge sewage over at least 10-consecutive days at the average daily capacity specified by the manufacturer. During three periods of each day the system must process sewage at the peak capacity for the period of time it is rated at peak capacity. The sewage for this test must be fresh, domestic sewage to which primary sludge has been added, as necessary, to create a test sewage with a minimum of 500 milligrams of suspended solids per liter.

[CGD 73–83, 40 FR 4624, Jan. 30, 1975, as amended by USCG–2002–12471, 67 FR 41333, June 18, 2002]

### § 159.123 Coliform test: Type I devices.

(a) The arithmetic mean of the fecal coliform bacteria in 38 of 40 samples of effluent discharged from a Type I device during the test described in § 159.121 must be less than 1000 per 100 milliliters when tested in accordance with 40 CFR part 136.

(b) The 40 samples must be taken from the device as follows: During each of the 10-test days, one sample must be taken at the beginning, middle, and end of an 8-consecutive hour period with one additional sample taken immediately following the peak capacity processing period.

[CGD 73–83, 40 FR 4624, Jan. 30, 1975, as amended by CGD 75–213, 41 FR 15326, Apr. 12, 1976]

### § 159.125 Visible floating solids: Type I devices.

During the sewage processing test (§ 159.121) 40 effluent samples of approximately 1 liter each shall be taken from a Type I device at the same time as samples taken in § 159.123 and passed expeditiously through a U.S. Sieve No. 12 as specified in ASTM E 11 (incorporated by reference, see § 159.4). The weight of the material retained on the screen after it has been dried to a constant weight in an oven at 103 °C. must be divided by the volume of the sample and expressed as milligrams per liter. This value must be 10 percent or less of the total suspended solids as determined in accordance with 40 CFR part 136 or at least 38 of the 40 samples.

NOTE: 33 U.S.C. 1321(b)(3) prohibits discharge of harmful quantities of oil into or upon the navigable waters of the United States or adjoining shorelines or into or upon the waters of the contiguous zone. Under 40 CFR 110.3 and 110.4 such discharges of oil include discharges which:

(a) Violate applicable water quality standards, or

(b) Cause a film or sheen upon or discoloration of the surface of the water or adjoining shorelines or cause a sludge or emulsion to be deposited beneath the surface of the water or upon adjoining shorelines. If a sample contains a quantity of oil determined to be

harmful, the Coast Guard will not certify the device.

[CGD 73–83, 40 FR 4624, Jan. 30, 1975, as amended by CGD 75–213, 41 FR 15326, Apr. 12, 1976; USCG–1999–5151, 64 FR 67176, Dec. 1, 1999]

### § 159.126 Coliform test: Type II devices.

(a) The arithmetic mean of the fecal coliform bacteria in 38 of 40 samples of effluent from a Type II device during the test described in § 159.121 must be 200 per 100 milliliters or less when tested in accordance with 40 CFR part 136.

(b) The 40 samples must be taken from the device as follows: During each of the 10 test days, one sample must be taken at the beginning, middle and end of an 8-consecutive hour period with one additional sample taken immediately following the peak capacity processing period.

[CGD 75–213, 41 FR 15326, Apr. 12, 1976]

### § 159.126a Suspended solids test: Type II devices.

During the sewage processing test (§ 159.121) 40 effluent samples must be taken at the same time as samples are taken for § 159.126 and they must be analyzed for total suspended solids in accordance with 40 CFR part 136. The arithmetic mean of the total suspended solids in 38 of 40 of these samples must be less than or equal to 150 milligrams per liter.

[CGD 75–213, 41 FR 15326, Apr. 12, 1976]

### § 159.127 Safety coliform count: Recirculating devices.

Thirty-eight of forty samples of flush fluid from a recirculating device must have less than 240 fecal coliform bacteria per 100 milliliters. These samples must be collected in accordance with § 159.123(b) and tested in accordance with 40 CFR part 136.

[CGD 73–83, 40 FR 4624, Jan. 30, 1975, as amended by CGD 75–213, 41 FR 15326, Apr. 12, 1976]

### § 159.129 Safety: Ignition prevention test.

(a) Components of a device that are a potential ignition source in an explosive atmosphere must pass the test in paragraph (b) or (c) of this section or meet the requirements of paragraph (d) or have a specific warning in the instruction manual required by § 159.57 that the device should not be installed in an explosive atmosphere.

(b) Components protected by vapor exclusion must be placed in a chamber filled with a rich mixture of gasoline or propane in air with the pressure being varied from 0 to 2 psig once an hour for 8 hours. Vapor readings must be taken in the void being protected and must indicate a leakage less than 20 percent of the lower explosive limit of the mixture in the chamber.

(c) Components providing ignition protection by means other than vapor exclusion must be fitted with an ignition source, such as a spark plug, and a means of injecting an explosive mixture of gasoline or propane and air into the void that protects the component. Connections must be made so as to minimize any additional volume added to the protected void by the apparatus delivering the explosive mixture. The component must be placed in a chamber filled with an explosive mixture and there must be no ignition of the explosive mixture surrounding the component when the following tests are conducted:

(1) Using any overload protection that is part of the device, the potential ignition source must be operated for one half hour at 110 percent of its rated voltage, one half hour at 50 percent of its rated voltage and one half hour at 100 percent of its rated voltage with the motor or armature locked, if the potential ignition source is a motor or part of a motor's electrical circuit.

(2) With the explosive mixture in the protected void, the test installed ignition source must be activated 50 times.

(3) The tests paragraphs (c) (1) and (2) of this section must be repeated with any plugs removed.

(d) Components that are certified as being intrinsically safe in accordance with the Instrument Society of America (RP 12.2) or explosion proof in accordance with the Underwriters Laboratories STD 698 in Class I, Group D hazardous locations (46 CFR 111.80–5(a)) need not be subjected to this testing.

### § 159.131 Safety: Incinerating device.

An incinerating device must not incinerate unless the combustion chamber is closed, must purge the combustion chamber of combustible fuel vapors before and after incineration must secure automatically if the burner does not ignite, must not allow an accumulation of fuel, and must neither produce a temperature on surfaces adjacent to the incineration chamber higher than 67 °C nor produce a temperature on surfaces in normal body contact higher than 41 °C when operating in an ambient temperature of 25 °C. Unitized incineration devices must completely burn to a dry, inert ash, a simultaneous defecation and urination and must not discharge fly ash, malodors, or toxic substances.

## Subpart D—Recognition of Facilities

### § 159.201 Recognition of facilities.

A recognized facility is an independent laboratory accepted by the Coast Guard under 46 CFR 159.010 to perform the tests and inspections required under this part. A list of accepted laboratories is available from the Commandant (CG–5213).

[CGD 95–028, 62 FR 51194, Sept. 30, 1997, as amended by USCG–1999–5832, 64 FR 34715, June 29, 1999; USCG–2008–0179, 73 FR 35016, June 19, 2008]

## Subpart E—Discharge of Effluents in Certain Alaskan Waters by Cruise Vessel Operations

SOURCE: 66 FR 38930, July 26, 2001, unless otherwise noted.

### § 159.301 Purpose.

The purpose of this subpart is to implement ''Title XIV—Certain Alaskan Cruise Ship Operations'' contained in section 1(a)(4) of Pub. L. 106–554, enacted on December 21, 2000, by prescribing regulations governing the discharges of sewage and graywater from cruise vessels, require sampling and testing of sewage and graywater discharges, and establish reporting and record keeping requirements.

### § 159.303 Applicability.

This subpart applies to each cruise vessel authorized to carry 500 or more passengers operating in the waters of the Alexander Archipelago and the navigable waters of the United States within the State of Alaska and within the Kachemak Bay National Estuarine Research Reserve.

### § 159.305 Definitions.

In this subpart:

*Administrator*—means the Administrator of the United States Environmental Protection Agency.

*Applicable Waters of Alaska*—means the waters of the Alexander Archipelago and the navigable waters of the United States within the State of Alaska and within the Kachemak Bay National Estuarine Research Reserve.

*Captain of the Port*—means the Captain of the Port as defined in Subpart 3.85 of this chapter.

*Conventional Pollutants*—means the list of pollutants listed in 40 CFR 401.16.

*Cruise Vessel*—means a passenger vessel as defined in section 2101(22) of Title 46, United States Code. The term does not include a vessel of the United States operated by the federal government or a vessel owned and operated by the government of a State.

*Discharge*—means a release, however caused, from a cruise vessel, and includes, any escape, disposal, spilling, leaking, pumping, emitting or emptying.

*Environmental Compliance Records*—includes the Sewage and Graywater Discharge Record Book, all discharge reports, all discharge sampling test results, as well as any other records that must be kept under this subpart.

*Graywater*—means only galley, dishwasher, bath, and laundry waste water. The term does not include other wastes or waste streams.

*Navigable Waters*—has the same meaning as in section 502 of the Federal Water Pollution Control Act, as amended.

*Person*—means an individual, corporation, partnership, limited liability company, association, state, municipality, commission or political subdivision of a state, or any federally recognized Indian tribal government.

*Priority Pollutant*—means the list of toxic pollutants listed in 40 CFR 401.15.

*Sewage*—means human body wastes and the wastes from toilets and other receptacles intended to receive or retain body waste.

*Treated Sewage*—means sewage meeting all applicable effluent limitation standards and processing requirements of the Federal Water Pollution Control Act, as amended and of Title XIV of Public Law 106–554 ''Certain Alaskan Cruise Ship Operations'', and regulations promulgated under either.

*Untreated Sewage*—means sewage that is not treated sewage.

*Waters Of The Alexander Archipelago*—means all waters under the sovereignty of the United States within or near Southeast Alaska as follows:

(1) Beginning at a point 58° 11–44 N, 136° 39–25 W [near Cape Spencer Light], thence southeasterly along a line three nautical miles seaward of the baseline from which the breadth of the territorial sea is measured in the Pacific Ocean and the Dixon Entrance, except where this line intersects geodesics connecting the following five pairs of points:

58° 05–17 N, 136° 33–49 W and 58° 11–41 N, 136° 39–25 W [Cross Sound]
56° 09–40 N, 134° 40–00 W and 55° 49–15 N, 134° 17–40 W [Chatham Strait]
55° 49–15 N, 134° 17–40 W and 55° 50–30 N, 133° 54–15 W [Sumner Strait]
54° 41–30 N, 132° 01–00 W and 54° 51–30 N, 131° 20–45 W [Clarence Strait]
54° 51–30 N, 131° 20–45 W and 54° 46–15 N, 130° 52–00 W [Revillagigedo Channel]

(2) The portion of each such geodesic in paragraph (1) of this definition situated beyond 3 nautical miles from the baseline from which the breadth of the territorial seas is measured from the outer limit of the waters of the Alexander Archipelago in those five locations.

### § 159.307 Untreated sewage.

No person shall discharge any untreated sewage from a cruise vessel into the applicable waters of Alaska.

### § 159.309 Limitations on discharge of treated sewage or graywater.

(a) No person shall discharge treated sewage or graywater from a cruise vessel into the applicable waters of Alaska unless:

(1) The cruise vessel is underway and proceeding at a speed of not less than six knots;

(2) The cruise vessel is not less than one nautical mile from the nearest shore, except in areas designated by the Coast Guard in consultation with the State of Alaska;

(3) The discharge complies with all applicable cruise vessel effluent standards established pursuant to Pub. L. 106–554 and any other applicable law, and

(4) The cruise vessel is not in an area where the discharge of treated sewage or graywater is prohibited.

(b) Until such time as the Administrator promulgates regulations addressing effluent quality standards for cruise vessels operating in the applicable waters of Alaska, treated sewage and graywater may be discharged from vessels in circumstances otherwise prohibited under paragraph (a)(1) and (2) of this section provided that:

(1) Notification to the Captain of the Port (COTP) is made not less than 30 days prior to the planned discharge, and such notice includes results of tests showing compliance with this section;

(2) The discharge satisfies the minimum level of effluent quality specified in 40 CFR 133.102;

(3) The geometric mean of the samples from the discharge during any 30-day period does not exceed 20 fecal coliform/100 milliliters (ml) and not more than 10 percent of the samples exceed 40 fecal coliform/100 ml;

(4) Concentrations of total residual chlorine do not exceed 10.0 micrograms per liter (μgm/l);

(5) Prior to any such discharge occurring, the owner, operator or master, or other person in charge of a cruise vessel, can demonstrate to the COTP that test results from at least five samples taken from the vessel representative of the effluent to be discharged, on different days over a 30-day period, conducted in accordance with the guidelines promulgated by the Administrator in 40 CFR part 136, which confirm that the water quality of the effluents proposed for discharge is in

compliance with paragraphs (b)(2), (3) and (4) of this section; and

(6) To the extent not otherwise being done by the owner, operator, master or other person in charge of a cruise vessel, pursuant to § 159.317 of this subpart, the owner, operator, master or other person in charge of a cruise vessel shall demonstrate continued compliance through sampling and testing for conventional pollutants and residual chlorine of all treated sewage and graywater effluents periodically as determined by the COTP.

[66 FR 38930, July 26, 2001, as amended at USCG–2005–21531, 70 FR 36350, June 23, 2005]

### § 159.311 Safety exception.

The regulations in this subpart shall not apply to discharges made for the purpose of securing the safety of the cruise vessel or saving life at sea, provided that all reasonable precautions have been taken for the purpose of preventing or minimizing the discharge.

### § 159.313 Inspection for compliance and enforcement.

(a) Cruise vessels operating within the applicable waters of Alaska are subject to inspection by the Coast Guard to ensure compliance with this subpart.

(b) An inspection under this section shall include an examination of the Sewage and Graywater Discharge Record Book required under § 159.315 of this subpart, environmental compliance records, and a general examination of the vessel. A copy of any entry in the Sewage and Graywater Discharge Record Book may be made and the Master of the vessel may be required to certify that the copy is a true copy of the original entry.

(c) A vessel not in compliance with this subpart may be subject to the penalties set out in § 159.321, denied entry into the applicable waters of Alaska, detained, or restricted in its operations by order of the COTP.

### § 159.315 Sewage and graywater discharge record book.

(a) While operating in the applicable waters of Alaska each cruise vessel shall maintain, in English, a legible Sewage and Graywater Discharge Record Book with the vessel's name and official number listed on the front cover and at the top of each page.

(b) Entries shall be made in the Sewage and Graywater Discharge Record Book whenever any of the following is released into the applicable waters of Alaska:

(1) Treated or untreated sewage;

(2) Graywater; or

(3) Sewage and graywater mixture.

(c) Each entry in the Sewage and Graywater Discharge Record Book shall, at a minimum, contain the following information:

(1) Name and location of each discharge port within the ship;

(2) Date the start of discharge occurred;

(3) Whether the effluent is treated or untreated sewage, graywater, or a sewage and graywater mixture and type of treatment used;

(4) Time discharge port is opened;

(5) Vessel's latitude and longitude at the time the discharge port is opened;

(6) Volume discharged in cubic meters;

(7) Flow rate of discharge in liters per minute;

(8) Time discharge port is secured;

(9) Vessel's latitude and longitude at the time the discharge port is secured; and

(10) Vessel's minimum speed during discharge.

(d) In the event of an emergency, accidental or other exceptional discharge of sewage or graywater, a statement shall be made in the Sewage and Graywater Discharge Record Book of the circumstances and reasons for the discharge and an immediate notification of the discharge shall be made to the COTP.

(e) Each entry of a discharge shall be recorded without delay and signed and dated by the person or persons in charge of the discharge concerned and each completed page shall be signed and dated by the master or other person having charge of the ship.

(f) The Sewage and Graywater Discharge Record Book shall be kept in such a place as to be readily available for inspection at all reasonable times and shall be kept on board the ship.

(g) The master or other person having charge of a ship required to keep a Sewage and Graywater Discharge

Record Book shall be responsible for the maintenance of such record.

(h) The Sewage and Graywater Discharge Record Book shall be maintained on board for not less than three years.

**§ 159.317 Sampling and reporting.**

(a) The owner, operator, master or other person in charge of a cruise vessel that discharges treated sewage and/or graywater in the applicable waters of Alaska shall;

(1) Not less than 90 days prior to each vessel's initial entry into the applicable waters of Alaska during any calendar year, provide to the COTP certification of participation under a Quality Assurance/Quality Control Plan (QA/QCP) accepted by the COTP for sampling and analysis of treated sewage and/or graywater for the current operating season;

(2) Not less than 30 days nor more than 120 days prior to each vessel's initial entry into the applicable waters of Alaska during any calendar year, provide a certification to the COTP that the vessel's treated sewage and graywater effluents meet the minimum standards established by the Administrator, or in the absence of such standards, meet the minimum established in § 159.319 of this subpart;

(3) Within 30 days of each vessel's initial entry into the applicable waters of Alaska during any calendar year, provide to the COTP a Vessel Specific Sampling Plan (VSSP) for review and acceptance, and undergo sampling and testing for conventional pollutants of all treated sewage and graywater effluents as directed by the COTP;

(4) While operating in the applicable waters of Alaska be subject to unannounced sampling of treated sewage and graywater discharge effluents, or combined treated sewage/graywater discharge effluents for the purpose of testing for a limited suite, as determined by the Coast Guard, of priority pollutants;

(5) While operating in the applicable waters of Alaska be subject to additional random sampling events, in addition to all other required sampling, of some or all treated sewage and graywater discharge effluents for conventional and/or priority pollutant testing as directed by the COTP;

(6) Ensure all samples, as required by this section, are collected and tested by a laboratory accepted by the Coast Guard for the testing of conventional and priority pollutants, as defined by this subpart, and in accordance with the cruise vessel's Coast Guard accepted QA/QCP and VSSP;

(7) Pay all costs associated with development of an acceptable QA/QCP and VSSP, sampling and testing of effluents, reporting of results, and any additional environmental record keeping as required by this subpart, not to include cost of federal regulatory oversight.

(b) A QA/QCP must, at a minimum include:

(1) Sampling techniques and equipment, sampling preservation methods and holding times, and transportation protocols, including chain of custody;

(2) Laboratory analytical information including methods used, calibration, detection limits, and the laboratory's internal QA/QC procedures;

(3) Quality assurance audits used to determine the effectiveness of the QA program; and

(4) Procedures and deliverables for data validation used to assess data precision and accuracy, the representative nature of the samples drawn, comparability, and completeness of measure parameters.

(c) A VSSP is a working document used during the sampling events required under this section and must, at a minimum, include:

(1) Vessel name;

(2) Passenger and crew capacity of the vessel;

(3) Daily water use of the vessel;

(4) Holding tank capacities for treated sewage and graywater;

(5) Vessel schematic of discharge ports and corresponding sampling ports;

(6) Description of discharges; and

(7) A table documenting the type of discharge, type of sample drawn (grab or composite), parameters to test for (conventional or priority pollutants), vessel location when sample drawn, date and time of the sampling event.

(d) Test results for conventional pollutants shall be submitted within 15

calendar days of the date the sample was collected, and for priority pollutants within 30 calendar days of the date the sample was collected, to the COTP directly by the laboratory conducting the testing and in accordance with the Coast Guard accepted QA/QCP.

(e) Samples collected for analysis under this subpart shall be held by the laboratory contracted to do the analysis for not less than six months, or as directed by the COTP.

(f) Reports required under this section may be written or electronic. If electronic, the reports must be in a format readable by Coast Guard and Alaska Department of Environmental Conservation data systems.

### § 159.319 Fecal coliform and total suspended solids standards.

(a) *Treated sewage effluent discharges.* Until such time as the Administrator promulgates effluent discharge standards for treated sewage, treated sewage effluent discharges in the applicable waters of Alaska shall not have a fecal coliform bacterial count of greater than 200 per 100 ml nor total suspended solids greater than 150 mg/l.

(b) *Graywater effluent discharges.* [Reserved]

### § 159.321 Enforcement.

(a) *Administrative Penalties*—(1) *Violations.* Any person who violates this subpart may be assessed a class I or class II civil penalty by the Secretary or his delegatee.

(2) *Classes of penalties.* (i) *Class I.* The amount of a class I civil penalty under this section may not exceed $10,000 per violation, except that the maximum amount of any class I civil penalty under this section shall not exceed $25,000. Before assessing a civil penalty under this subparagraph, the Secretary or his delegatee shall give to the person to be assessed such penalty written notice of the Secretary's proposal to assess the penalty and the opportunity to request, within 30 days of the date the notice is received by such person, a hearing on the proposed penalty. Such hearing shall not be subject to 5 U.S.C. 554 or 556, but shall provide a reasonable opportunity to be heard and to present evidence.

(ii) *Class II.* The amount of a class II civil penalty under this section may not exceed $10,000 per day for each day during which the violation continues, except that the maximum amount of any class II civil penalty under this section shall not exceed $125,000. Except as otherwise provided in paragraph (a) of this section, a class II civil penalty shall be assessed and collected in the same manner, and subject to the same provisions as in the case of civil penalties assessed and collected after notice and an opportunity for hearing on the record in accordance with 5 U.S.C. 554. Proceedings to assess a class II administrative civil penalty under this section will be governed by 33 CFR part 20.

(3) *Rights of interested persons.* (i) *Public notice.* Before issuing an order assessing a class II civil penalty under this paragraph, the Secretary shall provide public notice of and reasonable opportunity to comment on the proposed issuance of each order.

(ii) *Presentation of evidence.* Any person who comments on a proposed assessment of a class II civil penalty under this section shall be given notice of any hearing held under paragraph (a) of this section, and of the order assessing such penalty. In any hearing held under paragraph (a)(3) of this section, such person shall have a reasonable opportunity to be heard and present evidence.

(iii) *Rights of interested persons to a hearing.* If no hearing is held under paragraph (a)(2) of this section before issuance of an order assessing a class II civil penalty under this section, any person who commented on the proposed assessment may petition, within 30 days after the issuance of such an order, the Secretary or his delegatee to set aside such order and provide a hearing on the penalty. If the evidence presented by the petitioner in support of the petition is material and was not considered in the issuance of the order, the Secretary, or his delegatee, shall immediately set aside such order and provide a hearing in accordance with paragraph (a)(2)(ii) of this section. If the Secretary or his delegatee denies a hearing under this clause, the Secretary or his delegatee shall provide to

the petitioner and publish in the FEDERAL REGISTER notice of and the reasons for such denial.

(b) *Civil judicial penalties*—(1) *Generally*. Any person who violates this subpart shall be subject to a civil penalty not to exceed $25,000 per day for each violation. Each day a violation continues constitutes a separate violation.

(2) *Limitation*. A person is not liable for a civil judicial penalty under this paragraph for a violation if the person has been assessed a civil administrative penalty under paragraph (a) of this section for the violation.

(c) *Determination of amount*. In determining the amount of a civil penalty under paragraphs (a) or (b) of this section, the court or the Secretary or his delegatee shall consider the seriousness of the violation, any history of such violations, any good-faith efforts to comply with applicable requirements, the economic impact of the penalty on the violator, and other such matters as justice may require.

(d) *Criminal penalties*—(1) *Negligent violations*. Any person who negligently violates this subpart commits a Class A misdemeanor.

(2) *Knowing violations*. Any person who knowingly violates this subpart commits a Class D felony.

(3) *False statements*. Any person who knowingly makes any false statement, representation, or certification in any record, report or other document filed or required to be maintained under this subpart, or who falsifies, tampers with, or knowingly renders inaccurate any testing or monitoring device or method required to be maintained under this subpart commits a Class D felony.

(e) *Awards*. (1) The Secretary or his delegatee or the court, when assessing any fines or civil penalties, as the case may be, may pay from any fines or civil penalties collected under this section an amount not to exceed one-half of the penalty or fine collected to any individual who furnished information which leads to the payment of the penalty or fine. If several individuals provide such information, the amount shall be divided equitably among such individuals. No officer or employee of the United States, the State of Alaska or any Federally recognized Tribe who furnishes information or renders service in the performance of his or her official duties shall be eligible for payment under this paragraph.

(2) The Secretary, his delegatee, or a court, when assessing any fines or civil penalties, as the case may be, may pay, from any fines or civil penalties collected under this section, to the State of Alaska or any Federally recognized Tribe providing information or investigative assistance which leads to payment of the penalty or fine, an amount which reflects the level of information or investigative assistance provided. Should the State of Alaska or a Federally recognized Tribe and an individual under paragraph (e)(1) of this section be eligible for an award, the Secretary, his delegatee, or the court, as the case may be, shall divide the amount equitably.

(f) *Liability in rem*. A cruise vessel operated in violation of this subpart is liable in rem for any fine imposed under paragraph (c) of this section or for any civil penalty imposed under paragraphs (a) or (b) of this section, and may be proceeded against in the United States district court of any district in which the cruise vessel may be found.