AUTHENTICATED
U.S. GOVERNMENT
INFORMATION
GPO



| | AQCR No. |
|---|---|
| Metropolitan Cheyenne | 242 |
| Wyoming | 243 |
| Puerto Rico: | |
| Puerto Rico | 244 |
| American Samoa: | |
| American Samoa | 245 |
| Guam: | |
| Guam | 246 |
| U.S. Virgin Islands: | |
| U.S. Virgin Islands | 247 |

# PART 82—PROTECTION OF STRATOSPHERIC OZONE

## Subpart A—Production and Consumption Controls

Sec.
82.1 Purpose and scope.
82.2 [Reserved]
82.3 Definitions for class I and class II controlled substances.
82.4 Prohibitions for class I controlled substances.
82.5 Apportionment of baseline production allowances for class I controlled substances.
82.6 Apportionment of baseline consumption allowances for class I controlled substances.
82.7 Grant and phase reduction of baseline production and consumption allowances for class I controlled substances.
82.8 Grant of essential use allowances and critical use allowances.
82.9 Availability of production allowances in addition to baseline production allowances for class I controlled substances.
82.10 Availability of consumption allowances in addition to baseline consumption allowances for class I controlled substances.
82.11 Exports of class I controlled substances to Article 5 Parties.
82.12 Transfers of allowances for class I controlled substances.
82.13 Recordkeeping and reporting requirements for class I controlled substances.
82.15 Prohibitions for class II controlled substances.
82.16 Phaseout schedule of class II controlled substances.
82.17 Apportionment of baseline production allowances for class II controlled substances.
82.18 Availability of production in addition to baseline production allowances for class II controlled substances.
82.19 Apportionment of baseline consumption allowances for class II controlled substances.
82.20 Availability of consumption allowances in addition to baseline consumption allowances for class II controlled substances.
82.21–82.22 [Reserved]
82.23 Transfers of allowances of class II controlled substances.
82.24 Recordkeeping and reporting requirements for class II controlled substances.
APPENDIX A TO SUBPART A—CLASS I CONTROLLED SUBSTANCES
APPENDIX B TO SUBPART A—CLASS II CONTROLLED SUBSTANCES
APPENDIX C TO SUBPART A—PARTIES TO THE MONTREAL PROTOCOL, AND NATIONS COMPLYING WITH, BUT NOT PARTIES TO, THE PROTOCOL
APPENDIX D TO SUBPART A—HARMONIZED TARIFF SCHEDULE DESCRIPTION OF PRODUCTS THAT MAY CONTAIN CONTROLLED SUBSTANCES IN APPENDIX A, CLASS I, GROUPS I AND II
APPENDIX E TO SUBPART A—ARTICLE 5 PARTIES
APPENDIX F TO SUBPART A—LISTING OF OZONE-DEPLETING CHEMICALS
APPENDIX G TO SUBPART A—UNEP RECOMMENDATIONS FOR CONDITIONS APPLIED TO EXEMPTION FOR ESSENTIAL LABORATORY AND ANALYTICAL USES
APPENDIX H TO SUBPART A—CLEAN AIR ACT AMENDMENTS OF 1990 PHASEOUT SCHEDULE FOR PRODUCTION OF OZONE-DEPLETING SUBSTANCES
APPENDIX I TO SUBPART A—GLOBAL WARMING POTENTIALS (MASS BASIS), REFERENCED TO THE ABSOLUTE GWP FOR THE ADOPTED CARBON CYCLE MODEL $CO_2$ DECAY RESPONSE AND FUTURE $CO_2$ ATMOSPHERIC CONCENTRATIONS HELD CONSTANT AT CURRENT LEVELS. (ONLY DIRECT EFFECTS ARE CONSIDERED.)
APPENDIX J TO SUBPART A—PARTIES TO THE MONTREAL PROTOCOL CLASSIFIED UNDER ARTICLE 5(1) THAT HAVE BANNED THE IMPORT OF CONTROLLED PRODUCTS THAT RELY ON CLASS I CONTROLLED SUBSTANCES FOR THEIR CONTINUING FUNCTIONING [RESERVED]
APPENDIX K TO SUBPART A—COMMODITY CODES FROM THE HARMONIZED TARIFF SCHEDULE FOR CONTROLLED SUBSTANCES AND USED CONTROLLED SUBSTANCES
APPENDIX L TO SUBPART A—APPROVED CRITICAL USES AND LIMITING CRITICAL CONDITIONS FOR THOSE USES FOR THE 2010 CONTROL PERIOD

## Subpart B—Servicing of Motor Vehicle Air Conditioners

82.30 Purpose and scope.
82.32 Definitions.
82.34 Prohibitions and required practices.
82.36 Approved refrigerant handling equipment.
82.38 Approved independent standards testing organizations.
82.40 Technician training and certification.

82.42 Certification, recordkeeping and public notification requirements.
APPENDIX A TO SUBPART B—STANDARD FOR RECYCLE/RECOVER EQUIPMENT
APPENDIX B TO SUBPART B—STANDARD FOR RECOVER EQUIPMENT
APPENDIX C TO SUBPART B—SAE J2788 STANDARD FOR RECOVERY/RECYCLE AND RECOVERY/RECYCLE/RECHARGING EQUIPMENT FOR HFC–134a REFRIGERANT
APPENDIX D TO SUBPART B—SAE J2810 STANDARD FOR RECOVERY ONLY EQUIPMENT FOR HFC–134a REFRIGERANT
APPENDIX E TO SUBPART B—THE STANDARD FOR AUTOMOTIVE REFRIGERANT RECYCLING EQUIPMENT INTENDED FOR USE WITH BOTH CFC-12 AND HFC-134a
APPENDIX F TO SUBPART B—STANDARD FOR RECOVER-ONLY EQUIPMENT THAT EXTRACTS A SINGLE, SPECIFIC REFRIGERANT OTHER THAN CFC-12 OR HFC-134a

## Subpart C—Ban on Nonessential Products Containing Class I Substances and Ban on Nonessential Products Containing or Manufactured With Class II Substances

82.60 Purpose.
82.62 Definitions.
82.64 Prohibitions.
82.65 Temporary exemptions.
82.66 Nonessential Class I products and exceptions.
82.68 Verification and public notice requirements.
82.70 Nonessential Class II products and exceptions.

## Subpart D—Federal Procurement

82.80 Purpose and scope.
82.82 Definitions.
82.84 Requirements.
82.86 Reporting requirements.

## Subpart E—The Labeling of Products Using Ozone-Depleting Substances

82.100 Purpose.
82.102 Applicability.
82.104 Definitions.
82.106 Warning statement requirements.
82.108 Placement of warning statement.
82.110 Form of label bearing warning statement.
82.112 Removal of label bearing warning statement.
82.114 Compliance by manufacturers and importers with requirements for labeling of containers of controlled substances, or products containing controlled substances.
82.116 Compliance by manufacturers or importers incorporating products manufactured with controlled substances.
82.118 Compliance by wholesalers, distributors and retailers.
82.120 Petitions.
82.122 Certification, recordkeeping, and notice requirements.
82.124 Prohibitions.

## Subpart F—Recycling and Emissions Reduction

82.150 Purpose and scope.
82.152 Definitions.
82.154 Prohibitions.
82.156 Required practices.
82.158 Standards for recycling and recovery equipment.
82.160 Approved equipment testing organizations.
82.161 Technician certification.
82.162 Certification by owners of recovery and recycling equipment.
82.164 Reclaimer certification.
82.166 Reporting and recordkeeping requirements.
82.169 Suspension and revocation procedures.
APPENDIX A TO SUBPART F—SPECIFICATIONS FOR FLUOROCARBON AND OTHER REFRIGERANTS
APPENDIX A1 TO SUBPART F—GENERIC MAXIMUM CONTAMINANT LEVELS
APPENDIX B1 TO SUBPART F—PERFORMANCE OF REFRIGERANT RECOVERY, RECYCLING AND/OR RECLAIM EQUIPMENT
APPENDIX B2 TO SUBPART F—PERFORMANCE OF REFRIGERANT RECOVERY, RECYCLING, AND/OR RECLAIM EQUIPMENT
APPENDIX C TO SUBPART F—METHOD FOR TESTING RECOVERY DEVICES FOR USE WITH SMALL APPLIANCES
APPENDIX D TO SUBPART F—STANDARDS FOR BECOMING A CERTIFYING PROGRAM FOR TECHNICIANS

## Subpart G—Significant New Alternatives Policy Program

82.170 Purpose and scope.
82.172 Definitions.
82.174 Prohibitions.
82.176 Applicability.
82.178 Information required to be submitted.
82.180 Agency review of SNAP submissions.
82.182 Confidentiality of data.
82.184 Petitions.
APPENDIX A TO SUBPART G—SUBSTITUTES SUBJECT TO USE RESTRICTIONS AND UNACCEPTABLE SUBSTITUTES
APPENDIX B TO SUBPART G—SUBSTITUTES SUBJECT TO USE RESTRICTIONS AND UNACCEPTABLE SUBSTITUTES
APPENDIX C TO SUBPART G—SUBSTITUTES SUBJECT TO USE RESTRICTIONS AND UNACCEPTABLE SUBSTITUTES LISTED IN THE MAY 22, 1996 FINAL RULE, EFFECTIVE JUNE 21, 1996
APPENDIX D TO SUBPART G—SUBSTITUTES SUBJECT TO USE RESTRICTIONS AND UNACCEPTABLE SUBSTITUTES

APPENDIX E TO SUBPART G—UNACCEPTABLE SUBSTITUTES LISTED IN THE JANUARY 26, 1999 FINAL RULE, EFFECTIVE JANUARY 26, 1999
APPENDIX F TO SUBPART G—UNACCEPTABLE SUBSTITUTES LISTED IN THE JANUARY 26, 1999 FINAL RULE, EFFECTIVE JANUARY 26, 1999
APPENDIX G TO SUBPART G—SUBSTITUTES SUBJECT TO USE RESTRICTIONS AND UNACCEPTABLE SUBSTITUTES LISTED IN THE MARCH 3, 1999, FINAL RULE, EFFECTIVE APRIL 2, 1999
APPENDIX H TO SUBPART G—SUBSTITUTES SUBJECT TO USE RESTRICTIONS AND UNACCEPTABLE SUBSTITUTES, EFFECTIVE MAY 28, 1999
APPENDIX I TO SUBPART G—SUBSTITUTES SUBJECT TO USE RESTRICTIONS, LISTED IN THE APRIL 26, 2000, FINAL RULE, EFFECTIVE MAY 26, 2000
APPENDIX J TO SUBPART G—SUBSTITUTES LISTED IN THE JANUARY 29, 2002 FINAL RULE, EFFECTIVE APRIL 1, 2002
APPENDIX K TO SUBPART G—SUBSTITUTES SUBJECT TO USE RESTRICTIONS AND UNACCEPTABLE SUBSTITUTES LISTED IN THE JULY 22, 2002, FINAL RULE, EFFECTIVE AUGUST 21, 2002
APPENDIX L TO SUBPART G—SUBSTITUTES LISTED IN THE JANUARY 27, 2003, FINAL RULE, EFFECTIVE MARCH 28, 2003
APPENDIX M TO SUBPART G—UNACCEPTABLE SUBSTITUTES LISTED IN THE SEPTEMBER 30, 2004 FINAL RULE, EFFECTIVE NOVEMBER 29, 2004
APPENDIX N TO SUBPART G [RESERVED]
APPENDIX O TO SUBPART—SUBSTITUTES LISTED IN THE SEPTEMBER 27, 2006 FINAL RULE, EFFECTIVE NOVEMBER 27, 2006
APPENDIX P TO SUBPART G—SUBSTITUTES LISTED IN THE SEPTEMBER 27, 2006 FINAL RULE, EFFECTIVE NOVEMBER 27, 2006
APPENDIX Q TO SUBPART G—UNACCEPTABLE SUBSTITUTES LISTED IN THE MARCH 28, 2007 FINAL RULE, EFFECTIVE MAY 29, 2007

## Subpart H—Halon Emissions Reduction

82.250 Purpose and scope.
82.260 Definitions.
82.270 Prohibitions.

## Subpart I—Ban on Refrigeration and Air-Conditioning Appliances Containing HCFCs

82.300 Purpose.
82.302 Definitions.
82.304 Prohibitions.
82.306 Prohibited products.

AUTHORITY: 42 U.S.C. 7414, 7601, 7671–7671q.

SOURCE: 57 FR 33787, July 30, 1992, unless otherwise noted.

## Subpart A—Production and Consumption Controls

SOURCE: 60 FR 24986, May 10, 1995, unless otherwise noted.

### § 82.1 Purpose and scope.

(a) The purpose of the regulations in this subpart is to implement the Montreal Protocol on Substances that Deplete the Ozone Layer and sections 602, 603, 604, 605, 606, 607, 614 and 616 of the Clean Air Act Amendments of 1990, Public Law 101–549. The Protocol and section 604 impose limits on the production and consumption (defined as production plus imports minus exports, excluding transhipments and used controlled substances) of certain ozone-depleting substances, according to specified schedules. The Protocol also requires each nation that becomes a Party to the agreement to impose certain restrictions on trade in ozone-depleting substances with non-Parties.

(b) This subpart applies to any person that produces, transforms, destroys, imports or exports a controlled substance or imports or exports a controlled product.

[63 FR 41642, Aug. 4, 1998]

### § 82.2 [Reserved]

### § 82.3 Definitions for class I and class II controlled substances.

As used in this subpart, the term:

*Administrator* means the Administrator of the United States Environmental Protection Agency or his authorized representative. For purposes of reports and petitions, the Administrator must be written at the following mailing address: EPA (6205J), Global Programs Division, 1200 Pennsylvania Ave., NW., Washington, DC 20460.

*Aircraft halon bottle* means a vessel used as a component of an aircraft fire suppression system containing halon-1301 approved under FAA rules for installation in a certificated aircraft.

*Appliance* means any device which contains and uses a refrigerant and which is used for household or commercial purposes, including any air conditioner, refrigerator, chiller, or freezer.

*Applicator* means the person who applies methyl bromide.

*Approved critical use(s)* means those uses of methyl bromide listed in Column A of appendix L to this subpart as further clarified in Columns B and C of that appendix.

*Approved critical user(s) means a person who:*

(1) For the applicable control period, applied to EPA for a critical use exemption or is a member of a consortium that applied to EPA for a critical use exemption for a use and location of use that was included in the U.S. nomination, authorized by a Decision of the Parties to the Montreal Protocol, and then finally determined by EPA in a notice-and-comment rulemaking to be an approved critical use; and

(2) Has an area in the applicable location of use that requires methyl bromide fumigation because the person reasonably expects that the area will be subject to a limiting critical condition during the applicable control period.

*Article 5 allowances* means the allowances apportioned under § 82.9(a), § 82.11(a)(2), and § 82.18(a).

*Baseline consumption allowances* means the consumption allowances apportioned under § 82.6 and § 82.19.

*Baseline production allowances* means the production allowances apportioned under § 82.5 and § 82.17.

*Beijing Amendments* means the Montreal Protocol, as amended at the Eleventh Meeting of the Parties to the Montreal Protocol in Beijing in 1999.

*Calculated level* means the weighted amount of a controlled substance determined by multiplying the amount (in kilograms) of the controlled substance by that substance's ozone depletion potential (ODP) weight listed in appendix A or appendix B to this subpart.

*Class I* refers to the controlled substances listed in appendix A to this subpart.

*Class II* refers to the controlled substances listed in appendix B to this subpart.

*Commodity Owner, Shipper or their Agent* means the person requesting that an applicator use methyl bromide for quarantine or preshipment applications.

*Completely destroy* means to cause the expiration of a controlled substance at a destruction efficiency of 98 percent or greater, using one of the destruction technologies approved by the Parties.

*Complying with the Protocol*, when referring to a foreign state not Party to the 1987 Montreal Protocol, the London Amendments, or the Copenhagen Amendments, means that the non-Party has been determined as complying with the Protocol, as indicated in appendix C to this subpart, by a meeting of the Parties as noted in the records of the directorate of the United Nations Secretariat.

*Confer* means to shift the essential-use allowances obtained under § 82.8 from the holder of the unexpended essential-use allowances to a person for the production of a specified controlled substance, or to shift the HCFC–141b exemption allowances granted under § 82.16(h) from the holder of the unexpended HCFC–141b exemption allowances to a person for the production or import of the controlled substance.

*Consortium* means an organization representing a group of methyl bromide users that has collectively submitted an application for a critical use exemption on behalf of all members of the group. The members of a consortium shall be determined on the basis of the rules established by the organization. Members may either be required to formally join the consortium (*e.g.*, by submitting an application or paying dues) or may automatically become members upon meeting particular criteria (*e.g.*, a grower of a specific crop in a particular region).

*Consumption* means the production plus imports minus exports of a controlled substance (other than transhipments, or used controlled substances).

*Consumption allowances* means the privileges granted by this subpart to produce and import controlled substances; however, consumption allowances may be used to produce controlled substances only in conjunction with production allowances. A person's consumption allowances for class I substances are the total of the allowances obtained under §§ 82.6 and 82.7 and 82.10, as may be modified under § 82.12 (transfer of allowances). A person's consumption allowances for class II controlled

substances are the total of the allowances obtained under §§ 82.19 and 82.20, as may be modified under § 82.23.

*Control period* means the period from January 1, 1992 through December 31, 1992, and each twelve-month period from January 1 through December 31, thereafter.

*Controlled product* means a product that contains a controlled substance listed as a Class I, Group I or II substance in appendix A to this subpart. Controlled products include, but are not limited to, those products listed in appendix D to this subpart.

Controlled products belong to one or more of the following six categories of products:

(1) Automobile and truck air conditioning units (whether incorporated in vehicles or not);

(2) Domestic and commercial refrigeration and air-conditioning/heat pump equipment (whether containing controlled substances as a refrigerant and/or in insulating material of the product), e.g. Refrigerators, Freezers, Dehumidifiers, Water coolers, Ice machines, Air-conditioning and heat pump units;

(3) Aerosol products, except medical aerosols;

(4) Portable fire extinguishers;

(5) Insulation boards, panels and pipe covers;

(6) Pre-polymers.

*Controlled substance* means any substance listed in appendix A or appendix B to this subpart, whether existing alone or in a mixture, but excluding any such substance or mixture that is in a manufactured product other than a container used for the transportation or storage of the substance or mixture. Thus, any amount of a listed substance in appendix A or appendix B to this subpart that is not part of a use system containing the substance is a controlled substance. If a listed substance or mixture must first be transferred from a bulk container to another container, vessel, or piece of equipment in order to realize its intended use, the listed substance or mixture is a ''controlled substance.'' The inadvertent or coincidental creation of insignificant quantities of a listed substance in appendix A or appendix B to this subpart; during a chemical manufacturing process, resulting from unreacted feedstock, from the listed substance's use as a process agent present as a trace quantity in the chemical substance being manufactured, or as an unintended byproduct of research and development applications, is not deemed a controlled substance. Controlled substances are divided into two classes, Class I in appendix A to this subpart, and Class II listed in appendix B to this subpart. Class I substances are further divided into eight groups, Group I, Group II, Group III, Group IV, Group V, Group VI, Group VII, and Group VIII, as set forth in appendix A to this subpart.

*Copenhagen Amendments* means the Montreal Protocol on Substances That Deplete the Ozone Layer, as amended at the Fourth Meeting of the Parties to the Montreal Protocol in Copenhagen in 1992.

*Critical stock allowance (CSA)* means the right granted by this subpart to sell one (1) kilogram of class I, Group VI controlled substances from inventory produced or imported prior to the January 1, 2005 phaseout date for an approved critical use during the specified control period to the extent permitted by federal and state pesticide statutes and regulations other than the Clean Air Act and regulations in this part. A person's critical stock allowances are the total of the allowances obtained under § 82.8(c) as may be modified under § 82.12 (transfer of allowances).

*Critical stock allowance (CSA) holder* means an entity to which EPA allocates a quantity of critical stock allowances as reflected under § 82.8(c), or who receives a quantity of critical stock allowances through a transfer under § 82.12.

*Critical use* means a circumstance in which the following two conditions are satisfied:

(1) There are no technically and economically feasible alternatives or substitutes for methyl bromide available that are acceptable from the standpoint of environment and health and are suitable to the crops and circumstances involved, and

(2) The lack of availability of methyl bromide for a particular use would result in significant market disruption.

*Critical use allowance (CUA)* means the privilege granted by this subpart to

produce or import one (1) kilogram of methyl bromide for an approved critical use during the specified control period. A person's critical use allowances are the total of the allowances obtained under § 82.8(c) as may be modified under § 82.12 (transfer of allowances).

*Critical use allowance for pre-plant uses* means the privilege granted by this subpart to produce or import one (1) kilogram of methyl bromide solely for an approved critical use in pre-plant categories specified in Appendix L to this subpart during the specified control period. A person's critical use allowances for pre-plant uses are the total of the allowances obtained under § 82.8(c) as may be modified under § 82.12 (transfer of allowances).

*Critical use allowance for post-harvest uses* means the privilege granted by this subpart to produce or import one (1) kilogram of methyl bromide solely for an approved critical use in post-harvest categories specified in appendix L to this subpart during the specified control period. A person's critical use allowances for post-harvest uses are the total of the allowances obtained under § 82.8(c) as may be modified under § 82.12 (transfer of allowances).

*Critical use allowance (CUA) holder* means an entity to which EPA allocates a quantity of critical use allowances as reflected in § 82.8(c) or who receives a quantity of critical use allowances through a transfer under § 82.12.

*Critical use methyl bromide* means the class I, Group VI controlled substance produced or imported through expending a critical use allowance or that portion of inventory produced or imported prior to the January 1, 2005 phaseout date that is sold only for approved critical uses through expending a critical stock allowance.

*Destruction* means the expiration of a controlled substance to the destruction efficiency actually achieved, unless considered completely destroyed as defined in this section. Such destruction does not result in a commercially useful end product and uses one of the following controlled processes approved by the Parties to the Protocol:

(1) Liquid injection incineration;

(2) Reactor cracking;

(3) Gaseous/fume oxidation;

(4) Rotary kiln incineration;

(5) Cement kiln;

(6) Radio frequency plasma; or

(7) Municipal waste incinerators only for the destruction of foams.

*Distributor of methyl bromide* means the person directly selling a class I, Group VI controlled substance to an applicator.

*Essential Metered Dose Inhaler (Essential MDI)* means metered dose inhalers for the treatment of asthma and chronic obstructive pulmonary disease, approved by the Food and Drug Administration or by another Party's analogous health authority before December 31, 2000, and considered to be essential by the Party where the MDI product will eventually be sold. In addition, if the MDI product is to be sold in the U.S., the active moiety contained in the MDI must be listed as essential at 21 CFR 2.125(e).

*Essential-Use Allowances* means the privileges granted by § 82.4(n) to produce class I substances, as determined by allocation decisions made by the Parties to the Montreal Protocol and in accordance with the restrictions delineated in the Clean Air Act Amendments of 1990.

*Essential-Use Chlorofluorocarbons (Essential-use CFCs)* are the CFCs (CFC-11, CFC-12, or CFC-114) produced under the authority of essential-use allowances and not the allowances themselves. Essential-use CFCs include CFCs imported or produced by U.S. entities under the authority of essential-use allowances for use in essential metered dose inhalers, as well as CFCs imported or produced by non-U.S. entities under the authority of privileges granted by the Parties and the national authority of another country for use in essential metered dose inhalers.

*Essential-Uses* means those uses of controlled substances designated by the Parties to the Protocol to be necessary for the health and safety of, or critical for the functioning of, society; and for which there are no available technically and economically feasible alternatives or substitutes that are acceptable from the standpoint of environment and health. Beginning January 1, 2000 (January 1, 2002 for methyl

chloroform) the essential use designations for class I substances must be made in accordance with the provisions of the Clean Air Act Amendments of 1990.

*Export* means the transport of virgin or used controlled substances from inside the United States or its territories to persons outside the United States or its territories, excluding United States military bases and ships for on-board use.

*Export production allowances* means the privileges granted by § 82.18(b) to produce HCFC-141b for export following the phaseout of HCFC-141b on January 1, 2003.

*Exporter* means the person who contracts to sell controlled substances for export or transfers controlled substances to his affiliate in another country.

*Facility* means any process equipment (e.g., reactor, distillation column) used to convert raw materials or feedstock chemicals into controlled substances or consume controlled substances in the production of other chemicals.

*Foreign state* means an entity which is recognized as a sovereign nation or country other than the United States of America.[1]

*Foreign state not Party to* or *Non-Party* means a foreign state that has not deposited instruments of ratification, acceptance, or other form of approval with the Directorate of the United Nations Secretariat, evidencing the foreign state's ratification of the provisions of the 1987 Montreal Protocol, the London Amendments, or of the Copenhagen Amendments, as specified.

*Formulator* means an entity that distributes a class II controlled substance(s) or blends of a class II controlled substance(s) to persons who use the controlled substance(s) for a specific application identified in the formulator's petition for HCFC-141b exemption allowances.

*HCFC-141b exemption allowances* means the privileges granted to a HCFC-141b formulator; an agency, department, or instrumentality of the U.S.; or a non-governmental space vehicle entity by this subpart to order production of or to import HCFC-141b, as determined in accordance with § 82.16(h).

*Heel* means the amount of a controlled substance that remains in a container after it is discharged or offloaded (that is no more than ten percent of the volume of the container).

*Hydrostatic testing* means checking a gas pressure vessel for leaks or flaws. The vessel is filled with a nearly incompressible liquid—usually water or oil—and examined for leaks or permanent changes in shape.

*Import* means to land on, bring into, or introduce into, or attempt to land on, bring into, or introduce into any place subject to the jurisdiction of the United States whether or not such landing, bringing, or introduction constitutes an importation within the meaning of the customs laws of the United States, with the following exemptions:

(1) Off-loading used or excess controlled substances or controlled products from a ship during servicing,

(2) Bringing controlled substances into the U.S. from Mexico where the controlled substance had been admitted into Mexico in bond and was of U.S. origin, and

(3) Bringing a controlled product into the U.S. when transported in a consignment of personal or household effects or in a similar non-commercial situation normally exempted from U.S. Customs attention.

*Importer* means any person who imports a controlled substance or a controlled product into the United States. ''Importer'' includes the person primarily liable for the payment of any duties on the merchandise or an authorized agent acting on his or her behalf. The term also includes, as appropriate:

(1) The consignee;

(2) The importer of record (listed on U.S. Customs Service forms for imported controlled substances, used controlled substances or controlled products);

(3) The actual owner; or

(4) The transferee, if the right to draw merchandise in a bonded warehouse has been transferred.

*Individual shipment* means the kilograms of a used controlled substance for which a person may make one (1)

[1] Taiwan is not considered a foreign state.

U.S. Customs entry as, as identified in the non-objection letter from the Administrator under §§ 82.13(g) and 82.24(c)(4).

*Interstate commerce* means the distribution or transportation of any controlled substance between one state, territory, possession or the District of Columbia, and another state, territory, possession or the District of Columbia, or the sale, use or manufacture of any controlled substance in more than one state, territory, possession or District of Columbia. The entry points for which a controlled substance is introduced into interstate commerce are the release of a controlled substance from the facility in which the controlled substance was manufactured, the entry into a warehouse from which the domestic manufacturer releases the controlled substance for sale or distribution, and at the site of United States customs clearance.

*Limiting critical condition* means the regulatory, technical, and economic circumstances listed in Column C of Appendix L to this subpart that establish conditions of critical use for methyl bromide in a fumigation area.

*Location of use* means the geographic area (such as a state, region, or the entire United States) covered by an application for a critical use exemption in which the limiting critical condition may occur.

*London Amendments* means the Montreal Protocol, as amended at the Second Meeting of the Parties to the Montreal Protocol in London in 1990.

*Manufactured*, for an appliance, means the date upon which the appliance's refrigerant circuit is complete, the appliance can function, the appliance holds a full refrigerant charge, and the appliance is ready for use for its intended purposes; and for a precharged appliance component, means the date that such component is completely produced by the original equipment manufacture, charged with refrigerant, and is ready for initial sale or distribution in interstate commerce.

*Montreal Anniversary amendments* means the Montreal Protocol, as amended at the Ninth Meeting of the Parties to the Montreal Protocol in Montreal in 1997.

*Montreal Protocol* means the Montreal Protocol on Substances that Deplete the Ozone Layer, a protocol to the Vienna Convention for the Protection of the Ozone Layer, including adjustments adopted by the Parties thereto and amendments that have entered into force.

*1987 Montreal Protocol* means the Montreal Protocol, as originally adopted by the Parties in 1987.

*Nations complying with, but not joining, the Protocol* means any nation listed in Appendix C, Annex 2, to this subpart.

*Non-Objection notice* means the privilege granted by the Administrator to import a specific individual shipment of used controlled substance in accordance with §§ 82.13(g) and 82.24(c)(3) and (4).

*Party* means any foreign state that is listed in Appendix C to this subpart (pursuant to instruments of ratification, acceptance, or approval deposited with the Depositary of the United Nations Secretariat), as having ratified the specified control measure in effect under the Montreal Protocol. Thus, for purposes of the trade bans specified in § 82.4(l)(2) pursuant to the London Amendments, only those foreign states that are listed in Appendix C to this subpart as having ratified both the 1987 Montreal Protocol and the London Amendments shall be deemed to be Parties.

*Person* means any individual or legal entity, including an individual, corporation, partnership, association, state, municipality, political subdivision of a state, Indian tribe; any agency, department, or instrumentality of the United States; and any officer, agent, or employee thereof.

*Plant* means one or more facilities at the same location owned by or under common control of the same person.

*Preshipment applications*, with respect to class I, Group VI controlled substances, are those non-quarantine applications applied within 21 days prior to export to meet the official requirements of the importing country or existing official requirements of the exporting country. Official requirements are those which are performed by, or

authorized by, a national plant, animal, environmental, health or stored product authority.

*Production* means the manufacture of a controlled substance from any raw material or feedstock chemical, but does not include:

(1) The manufacture of a controlled substance that is subsequently transformed;

(2) The reuse or recycling of a controlled substance;

(3) Amounts that are destroyed by the approved technologies; or

(4) Amounts that are spilled or vented unintentionally.

*Production allowances* means the privileges granted by this subpart to produce controlled substances; however, production allowances may be used to produce controlled substances only in conjunction with consumption allowances. A person's production allowances for class I substances are the total of the allowances obtained under §§ 82.5, 82.7 and 82.9, and as may be modified under § 82.12 (transfer of allowances). A person's production allowances for class II controlled substances are the total of the allowances obtained under § 82.17 and as may be modified under §§ 82.18 and 82.23.

*Quarantine applications,* with respect to class I, Group VI controlled substances, are treatments to prevent the introduction, establishment and/or spread of quarantine pests (including diseases), or to ensure their official control, where: (1) Official control is that performed by, or authorized by, a national (including state, tribal or local) plant, animal or environmental protection or health authority; (2) quarantine pests are pests of potential importance to the areas endangered thereby and not yet present there, or present but not widely distributed and being officially controlled. This definition excludes treatments of commodities not entering or leaving the United States or any State (or political subdivision thereof).

*Source facility* means the location at which a used controlled substance was recovered from a piece of equipment, including the name of the company responsible for, or owning the piece of equipment, a contact person at the location, the mailing address for that specific location, and a phone number and a fax number for the contact person at the location.

*Space vehicle* means a man-made device, either manned or unmanned, designed for operation beyond earth's atmosphere. This definition includes integral equipment such as models, mock-ups, prototypes, molds, jigs, tooling, hardware jackets, and test coupons. Also included is auxiliary equipment associated with tests, transport, and storage, which through contamination can compromise the space vehicle performance.

*Third party applicator* means an applicator of critical use methyl bromide who fumigates or treats commodities, structures, crops, or land on behalf of an approved critical user.

*Transform* means to use and entirely consume (except for trace quantities) a controlled substance in the manufacture of other chemicals for commercial purposes.

*Transhipment* means the continuous shipment of a controlled substance, from a foreign state of origin through the United States or its territories, to a second foreign state of final destination, as long as the shipment does not enter into United States jurisdiction. A transhipment, as it moves through the United States or its territories, cannot be re-packaged, sorted or otherwise changed in condition.

*Unexpended Article 5 allowances* means Article 5 allowances that have not been used. At any time in any control period a person's unexpended Article 5 allowances are the total of the level of Article 5 allowances the person has authorization under this subpart to hold at that time for that control period, minus the level of controlled substances that the person has produced in that control period until that time.

*Unexpended consumption allowances* means consumption allowances that have not been used. At any time in any control period a person's unexpended consumption allowances are the total of the level of consumption allowances the person has authorization under this subpart to hold at that time for that control period, minus the level of controlled substances that the person has produced or imported (not including

transhipments and used controlled substances) in that control period until that time.

*Unexpended critical stock allowance (CSA)* means critical stock allowances against which methyl bromide has not yet been sold for an approved critical use.

*Unexpended critical use allowances (CUA)* means critical use allowances against which methyl bromide has not yet been produced or imported. At any time in any control period a person's unexpended critical use allowances are the total of the level of critical use allowances the person holds at that time for that control period, minus the level of class I, Group VI controlled substances that the person has produced or has imported solely for approved critical uses in that control period.

*Unexpended destruction and transformation credits* means destruction and transformation credits that have not been used. At any time in any control period a person's unexpended destruction and transformation credits are the total of the level of destruction and transformation credits the person has authorization under this subpart to hold at that time for that control period, minus the level of controlled substances that the person has produced or imported (not including transhipments and used controlled substances) in that control period until that time.

*Unexpended essential-use allowances* means essential-use allowances that have not been used. At any time in any control period a person's unexpended essential-use allowances are the total of the level of essential-use allowances the person has authorization under this subpart to hold at that time for that control period, minus the level of controlled substances that the person has imported or had produced in that control period until that time.

*Unexpended export production allowances* means export production allowances that have not been used. A person's unexpended export production allowances are the total of the quantity of the export production allowances the person has authorization under § 82.18(h) to hold for that control period, minus the quantity of class II controlled substances that the person has produced at that time during the same control period.

*Unexpended HCFC-141b exemption allowances* means HCFC-141b exemption allowances that have not been used. A person's unexpended HCFC-141b exemption allowances are the total of the quantity of the HCFC-141b exemption allowances the person has authorization under § 82.16(h) to hold for that control period, minus the quantity of HCFC-141b that the person has had produced or has had imported at that time during the same control period.

*Unexpended production allowances* means production allowances that have not been used. At any time in any control period a person's unexpended production allowances are the total of the level of production allowances he has authorization under this subpart to hold at that time for that control period, minus the level of controlled substances that the person has produced in that control period until that time.

*Used controlled substances* means controlled substances that have been recovered from their intended use systems (may include controlled substances that have been, or may be subsequently, recycled or reclaimed).

[60 FR 24986, May 10, 1995, as amended at 63 FR 41642, Aug. 4, 1998; 66 FR 37767, July 19, 2001; 67 FR 6359, Feb. 11, 2002; 67 FR 79872, Dec. 31, 2002; 67 FR 251, Jan. 2, 2003; 68 FR 2847, Jan. 21, 2003; 68 FR 42891, July 18, 2003; 69 FR 4064, Jan. 28, 2004; 69 FR 77001, Dec. 23, 2004; 70 FR 77047, Dec. 29, 2005; 71 FR 41171, July 20, 2006; 74 FR 10188, Mar. 10, 2009; 74 FR 66445, Dec. 15, 2009]

### § 82.4 Prohibitions for class I controlled substances.

(a)(1) Prior to January 1, 1996, for all Groups of class I controlled substances, and prior to January 1, 2005, for class I, Group VI controlled substances, no person may produce, at any time in any control period, (except that are transformed or destroyed domestically or by a person of another Party) in excess of the amount of unexpended production allowances or unexpended Article 5 allowances for that substance held by that person under the authority of this subpart at that time for that control period. Every kilogram of excess production constitutes a separate violation of this subpart.

(2) Effective January 1, 2003, production of class I, Group VI controlled substances is not subject to the prohibitions in paragraph (a)(1) of this section if it is solely for quarantine or preshipment applications as defined in this subpart.

(b)(1) Effective January 1, 1996, for any Class I, Group I, Group II, Group III, Group IV, Group V or Group VII controlled substances, and effective January 1, 2005 for any Class I, Group VI controlled substances, and effective August 18, 2003, for any Class I, Group VIII controlled substance, no person may produce, at any time in any control period (except that are transformed or destroyed domestically or by a person of another Party) in excess of the amount of conferred unexpended essential use allowances or exemptions, or in excess of the amount of unexpended critical use allowances, or in excess of the amount of unexpended Article 5 allowances as allocated under § 82.9 and § 82.11, as may be modified under § 82.12 (transfer of allowances) for that substance held by that person under the authority of this subpart at that time for that control period. Every kilogram of excess production constitutes a separate violation of this subpart.

(2) Effective January 1, 2005, production of class I, Group VI controlled substances is not subject to the prohibitions in paragraph (b)(1) of this section if it is solely for quarantine or preshipment applications as defined in this subpart, or it is solely for export to satisfy critical uses authorized by the Parties for that control period.

(c)(1) Prior to January 1, 1996, for all Groups of class I controlled substances, and prior to January 1, 2005, for class I, Group VI controlled substances, no person may produce or (except for transhipments, heels or used controlled substances) import, at any time in any control period, (except for controlled substances that are transformed or destroyed) in excess of the amount of unexpended consumption allowances held by that person under the authority of this subpart at that time for that control period. Every kilogram of excess production or importation (other than transhipments, heels or used controlled substances) constitutes a separate violation of this subpart.

(2) Effective January 1, 2003, production and import of class I, Group VI controlled substances is not subject to the prohibitions in paragraph (c)(1) of this section if it is solely for quarantine or preshipment applications as defined in this subpart.

(d) Effective January 1, 1996, for any class I, Group I, Group II, Group III, Group IV, Group V, or Group VII controlled substances, and effective January 1, 2005, for any class I, Group VI controlled substance, and effective August 18, 2003, for any class I, Group VIII controlled substance, no person may import (except for transhipments or heels), at any time in any control period, (except for controlled substances that are transformed or destroyed) in excess of the amount of unexpended essential use allowances or exemptions, or in excess of unexpended critical use allowances, for that substance held by that person under the authority of this subpart at that time for that control period. Every kilogram of excess importation (other than transhipments or heels) constitutes a separate violation of this subpart. It is a violation of this subpart to obtain unused class I controlled substances under the general laboratory exemption in excess of actual need and to recycle that material for sale into other markets.

(e) Effective January 1, 1996, no person may place an order by conferring essential-use allowances for the production of the class I controlled substance, at any time in any control period, in excess of the amount of unexpended essential-use allowances, held by that person under the authority of this subpart at that time for that control period. Effective January 1, 1996, no person may import a class I controlled substance with essential-use allowances, at any time in any control period, in excess of the amount of unexpended essential-use allowances, held by that person under the authority of this subpart at that time for that control period. No person may import or place an order for the production of a class I controlled substance with essential-use allowances, at any time in any control period, other than for the class I controlled substance(s) for which

they received essential-use allowances under paragraph (u) of this section. Every kilogram of excess production ordered in excess of the unexpended essential-use allowances conferred to the producer constitutes a separate violation of this subpart. Every kilogram of excess import in excess of the unexpended essential-use allowances held at that time constitutes a separate violation of this subpart.

(f) Effective January 1, 1996, no person may place an order by conferring transformation and destruction credits for the production of the class I controlled substance, at any time in any control period, in excess of the amount of transformation and destruction credits, held by that person under the authority of this subpart at that time for that control period. Effective January 1, 1996, no person may import class I controlled substance, at any time in any control period, in excess of the amount of transformation and destruction credits, held by that person under the authority of this subpart at that time for that control period. No person may import or place an order for the production of a class I controlled substance with transformation and destruction credits, at any time in any control period, other than for the class I controlled substance(s) for which they received transformation and destruction credits as under §82.9(f). Every kilogram of excess production ordered in excess of the unexpended transformation and destruction credits conferred to the producer constitutes a separate violation of this subpart. Every kilogram of excess import in excess of the unexpended transformation and destruction credits held at that time constitutes a separate violation of this subpart.

(g) Effective January 1, 1996, the U.S. total production and importation of a class I controlled substance (except Group VI) as allocated under this section for essential-use allowances and exemptions, and as obtained under §82.9 for destruction and transformation credits, may not, at any time, in any control period until January 1, 2000, exceed the percent limitation of baseline production in appendix H of this subpart, as set forth in the Clean Air Act Amendments of 1990. No person shall cause or contribute to the U.S. exceedance of the national limit for that control period.

(h) No person may sell in the U.S. any Class I controlled substance produced explicitly for export to an Article 5 country.

(i) Effective January 1, 1995, no person may import, at any time in any control period, a heel of any class I controlled substance that is greater than 10 percent of the volume of the container in excess of the amount of unexpended consumption allowances, or unexpended destruction and transformation credits held by that person under the authority of this subpart at that time for that control period. Every kilogram of excess importation constitutes a separate violation of this subpart.

(j) Effective January 1, 1995, no person may import, at any time in any control period, a used class I controlled substance, except for Group II used controlled substances shipped in aircraft halon bottles for hydrostatic testing, without having received a non-objection notice from the Administrator in accordance with §82.13(g)(2) and (3). A person who receives a non-objection notice for the import of an individual shipment of used controlled substances may not transfer or confer the right to import, and may not import any more than the exact quantity, in kilograms, of the used controlled substance cited in the non-objection notice. Every kilogram of importation of used controlled substance in excess of the quantity cited in the non-objection notice issued by the Administrator in accordance with §82.13(g)(2) and (3) constitutes a separate violation.

(k)(1) Prior to January 1, 1996, for all Groups of class I controlled substances, and prior to January 1, 2005, for class I, Group VI controlled substances, a person may not use production allowances to produce a quantity of a class I controlled substance unless that person holds under the authority of this subpart at the same time consumption allowances sufficient to cover that quantity of class I controlled substances nor may a person use consumption allowances to produce a quantity of class I controlled substances unless the person holds under authority of this subpart

at the same time production allowances sufficient to cover that quantity of class I controlled substances. However, prior to January 1, 1996, for all class I controlled substances, and prior to January 1, 2005, for class I, Group VI controlled substances, only consumption allowances are required to import, with the exception of transhipments, heels, and used controlled substances. Effective January 1, 1996, for all Groups of class I controlled substances, except Group VI, only essential use allowances or exemptions are required to import class I controlled substances, with the exception of transhipments, heels, used controlled substances, and essential use CFCs.

(2) Notwithstanding paragraph (k)(1) of this section, effective January 1, 2003, for class I, Group VI controlled substances, consumption allowances are not required to import quantities solely for quarantine or preshipment applications as defined in this subpart.

(l) Every kilogram of a controlled substance, and every controlled product, imported or exported in contravention of this subpart constitutes a separate violation of this subpart, thus no person may:

(1) Import or export any quantity of a controlled substance listed in Class I, Group I or Group II, in appendix A to this subpart from or to any foreign state not listed as a Party to the 1987 Montreal Protocol unless that foreign state is complying with the 1987 Montreal Protocol (See appendix C, annex 2 of this subpart);

(2) Import or export any quantity of a controlled substance listed in Class I, Group III, Group IV or Group V, in appendix A to this subpart, from or to any foreign state not Party to the London Amendments (as noted in appendix C, annex 1, to this subpart), unless that foreign state is complying with the London Amendments (as noted in appendix C, annex 2, to this subpart); or

(3) Import a controlled product, as noted in appendix D, annex 1 to this subpart, from any foreign state not Party to the 1987 Montreal Protocol (as noted in appendix C, annex 1, to this subpart), unless that foreign state is complying with the Protocol (as noted in appendix C, annex 2, to this subpart).

(4) Import or export any quantity of a controlled substance listed in Class I, Group VII, in appendix A to this subpart, from or to any foreign state not Party to the Copenhagen Amendments (as noted in appendix C, annex 1, to this subpart), unless that foreign state is complying with the Copenhagen Amendments (as noted in appendix C, annex 2, to this subpart.

(5) Import or export any quantity of a controlled substance listed in Class I, Group VI, in appendix A to this subpart, from or to any foreign state not Party to the Copenhagen Amendments (as noted in appendix C, annex 1, to this subpart), unless that foreign state is complying with the Copenhagen Amendments (as noted in appendix C, annex 2, to this subpart).

(6) Import or export any quantity of a controlled substance listed in Class I, Group VIII, in appendix A to this subpart, from or to any foreign state not Party to the Beijing Amendments (as noted in appendix C, annex 1, to this subpart), unless that foreign state is complying with the Beijing Amendments (as noted in appendix C, annex 2, to this subpart).

(m) Effective October 5, 1998, no person may export a controlled product to a Party listed in appendix J of this subpart in any control period after the control period in which EPA publishes a notice in the FEDERAL REGISTER listing that Party in appendix J of this subpart. EPA will publish a notice in the FEDERAL REGISTER that lists a Party in appendix J if the Party formally presents to the U.S. a government document through its embassy in the United States stating that it has established a ban on the import of controlled products and a ban on the manufacture of those same controlled products.

(n) No person may use class I controlled substances produced or imported under the essential use exemption for any purpose other than those set forth in this paragraph. Effective January 1, 1996, essential-use allowances are apportioned to a person under § 82.8(a) and (b) for the exempted production or importation of specified class I controlled substances solely for the purposes listed in paragraphs (n)(1)(i) through (iii) of this section.

(1) Essential-uses for the production or importation of controlled substances as agreed to by the Parties to the Protocol and subject to the periodic revision of the Parties are:

(i) Metered dose inhalers (MDIs) for the treatment of asthma and chronic obstructive pulmonary disease that were approved by the Food and Drug Administration before December 31, 2000.

(ii) Space Shuttle—solvents.

(iii) Essential laboratory and analytical uses (defined in appendix G of this subpart).

(2) Any person acquiring unused class I controlled substances produced or imported under the authority of essential-use allowances or the essential-use exemption granted in § 82.8 to this subpart for use in anything other than an essential-use (*i.e.*, for uses other than those specifically listed in paragraph (n)(1) of this section) is in violation of this subpart. Each kilogram of unused class I controlled substance produced or imported under the authority of essential-use allowances or the essential-use exemption and used for a non-essential use is a separate violation of this subpart. Any person selling unused class I controlled substances produced or imported under authority of essential-use allowances or the essential-use exemption for uses other than an essential-use is in violation of this subpart. Each kilogram of unused class I controlled substances produced or imported under authority of essential-use allowances or the essential-use exemption and sold for a use other than an essential-use is a separate violation of this subpart. It is a violation of this subpart to obtain unused class I controlled substances under the exemption for laboratory and analytical uses in excess of actual need and to recycle that material for sale into other markets.

(o) [Reserved]

(p) Critical Use Exemption: With respect to class I, Group VI substances (methyl bromide):

(1) For critical use allowance holders and critical stock allowance holders:

(i) No person shall sell critical use methyl bromide without first receiving a certification from the purchaser that the quantity purchased will be sold or used solely for an approved critical use. Every kilogram of critical use methyl bromide sold without first obtaining such certification constitutes a separate violation of this subpart.

(ii) No person shall sell a portion of inventory produced or imported prior to the January 1, 2005 phaseout date as critical use methyl bromide in excess of the number of unexpended critical stock allowances held by that person.

(iii) A person who sells methyl bromide produced or imported before the phaseout date of January 1, 2005 for a use identified by the user as a critical use must hold sufficient critical stock allowances (CSA) for the transaction and shall expend one allowance for each kilogram of methyl bromide sold. Every kilogram of critical use methyl bromide produced or imported before the phaseout date of January 1, 2005 that is sold without expending an allowance constitutes a separate violation of this subpart.

(2) For approved critical users, each action associated with each 200 kilograms of critical use methyl bromide for the following subparagraphs constitutes a separate violation of this subpart.

(i) No person shall take possession of quantities of critical use methyl bromide or acquire fumigation services using quantities of critical use methyl bromide without first completing the appropriate certification in accordance with the requirements in § 82.13.

(ii) No person who purchases critical use methyl bromide may use such quantities for a use other than the specified critical use listed in column A and the specified location of use in column B of appendix L to this subpart.

(iii) No person who purchases critical use methyl bromide produced or imported with expended critical use allowances for pre-plant uses, may use such quantities for other than the pre-plant uses as specified in column A and column B of appendix L to this subpart.

(iv) No person who purchases critical use methyl bromide produced or imported with expended critical use allowances for post-harvest uses, may use such quantities for other than the

post-harvest uses as specified in column A and column B of appendix L to this subpart.

(v) No person who uses critical use methyl bromide on a specific field or structure may concurrently or subsequently use non-critical use methyl bromide on the same field or structure for the same use (as defined in column A and column B of appendix L) in the same control period, excepting methyl bromide used under the quarantine and pre-shipment exemption.

(vi) No person who purchases critical use methyl bromide during the control period shall use that methyl bromide on a field or structure for which that person has used non-critical use methyl bromide for the same use (as defined in columns A and B of appendix L) in the same control period, excepting methyl bromide used under the quarantine and pre-shipment exemption, unless, subsequent to that person's use of the non-critical use methyl bromide, that person becomes subject to a prohibition on the use of methyl bromide alternatives due to the reaching of a local township limit described in appendix L of this part, or becomes an approved critical user as a result of rulemaking.

(q) Emergency use exemption. [Reserved]

[60 FR 24986, May 10, 1995]

EDITORIAL NOTE: For FEDERAL REGISTER citations affecting § 82.4, see the List of CFR Sections Affected, which appears in the Finding Aids section of the printed volume and at www.fdsys.gov.

### § 82.5 Apportionment of baseline production allowances for class I controlled substances.

Persons who produced controlled substances in Group I or Group II in 1986 are apportioned baseline production allowances as set forth in paragraphs (a) and (b) of this section. Persons who produced controlled substances in Group III, IV, or V in 1989 are apportioned baseline production allowances as set forth in paragraphs (c), (d), and (e) of this section. Persons who produced controlled substances in Group VI and VII in 1991 are apportioned baseline allowances as set forth in paragraphs (f) and (g) of this section.

| *Controlled substance* | *Person* | *Allowances* (kg) |
|---|---|---|
| (a) For Group I controlled substances: | | |
| CFC-11 | Allied-Signal, Inc | 23,082,358 |
| | E.I. DuPont de Nemours & Co | 33,830,000 |
| | Elf Atochem, N.A | 21,821,500 |
| CFC-12 | Laroche Chemicals | 12,856,364 |
| | Allied-Signal, Inc | 35,699,776 |
| | E.I. DuPont de Nemours & Co | 64,849,000 |
| | Elf Atochem, N.A | 31,089,807 |
| CFC-113 | Laroche Chemicals | 15,330,909 |
| | Allied-Signal, Inc | 21,788,896 |
| CFC-114 | E.I. DuPont de Nemours & Co | 58,553,000 |
| | Allied-Signal, Inc | 1,488,569 |
| CFC-115 | E.I. DuPont de Nemours & Co | 4,194,000 |
| | E.I. DuPont de Nemours & Co | 4,176,000 |
| (b) For Group II controlled substances: | | |
| Halon-1211 | Great Lakes Chemical Corp | 826,487 |
| | ICI Americas, Inc | 2,135,484 |
| Halon-1301 | E.I. DuPont de Nemours & Co | 3,220,000 |
| | Great Lakes Chemical Corp | 1,766,850 |
| Halon-2402 | | |
| (c) For Group III controlled substances: | | |
| CFC-13 | Allied-Signal, Inc | 127,125 |
| | E.I. DuPont de Nemours & Co | 187,831 |
| | Elf Atochem, N.A | 3,992 |
| | Great Lakes Chemical Corp | 56,381 |
| | Laroche Chemicals | 29,025 |
| CFC-111 | | |
| CFC-112 | | |
| CFC-211 | E.I. DuPont de Nemours & Co | 11 |

| Controlled substance | Person | Allowances (kg) |
|---|---|---|
| CFC-212 | E.I. DuPont de Nemours & Co | 11 |
| CFC-213 | E.I. DuPont de Nemours & Co | 11 |
| CFC-214 | E.I. DuPont de Nemours & Co | 11 |
| CFC-215 | E.I. DuPont de Nemours & Co | 511 |
| | Halocarbon Products Corp | 1,270 |
| CFC-216 | E.I. DuPont de Nemours & Co | 170,574 |
| CFC-217 | E.I. DuPont de Nemours & Co | 511 |
| (d) For Group IV controlled substances: | | |
| $CCl_4$ | Akzo Chemicals, Inc | 7,873,615 |
| | Degussa Corporation | 26,546 |
| | Dow Chemical Company, USA | 18,987,747 |
| | E.I. DuPont de Nemours & Co | 9,099 |
| | Hanlin Chemicals-WV, Inc | 219,616 |
| | ICI Americas, Inc | 853,714 |
| | Occidental Chemical Corp | 1,059,358 |
| | Vulcan Chemicals | 21,931,987 |
| (e) For Group V controlled substances: | | |
| Methyl Chloroform | Dow Chemical Company, USA | 168,030,117 |
| | E.I. DuPont de Nemours & Co | 2 |
| | PPG Industries, Inc | 57,450,719 |
| | Vulcan Chemicals | 89,689,064 |
| (f) For Group VI controlled substances: | | |
| Methyl Bromide | Great Lakes Chemical Corporation | 19,945,788 |
| | Ethyl Corporation | 8,233,894 |
| (g) For Group VII controlled substances: | | |
| HBFC 22B1–1 | Great Lakes Chemical Corporation | 46,211 |

[60 FR 24986, May 10, 1995, as amended at 68 FR 2848, Jan. 21, 2003]

### § 82.6 Apportionment of baseline consumption allowances for class I controlled substances.

Persons who produced, imported, or produced and imported controlled substances in Group I or Group II in 1986 are apportioned chemical-specific baseline consumption allowances as set forth in paragraphs (a) and (b) of this section. Persons who produced, imported, or produced and imported controlled substances in Group III, Group IV, or Group V in 1989 are apportioned chemical-specific baseline consumption allowances as set forth in paragraphs (c), (d) and (e) of this section. Persons who produced, imported, or produced and imported controlled substances in Group VI or VII in 1991 are apportioned chemical specific baseline consumption allowances as set forth in paragraphs (f) and (g) of this section.

| Controlled substance | Person | Allowances (kg) |
|---|---|---|
| | (a) For Group I controlled substances: | |
| CFC-11 | Allied-Signal, Inc | 22,683,833 |
| | E.I. DuPont de Nemours & Co | 32,054,283 |
| | Elf Atochem, N.A | 21,740,194 |
| | Hoechst Celanese Corporation | 185,396 |
| | ICI Americas, Inc | 1,673,436 |
| | Kali-Chemie Corporation | 82,500 |
| | Laroche Chemicals | 12,695,726 |
| | National Refrigerants, Inc | 693,707 |
| | Refricentro, Inc | 160,697 |
| | Sumitomo Corporation of America | 5,800 |
| CFC-12 | Allied-Signal, Inc | 35,236,397 |
| | E.I. DuPont de Nemours & Co | 61,098,726 |
| | Elf Atochem, N.A | 32,403,869 |

| *Controlled substance* | *Person* | *Allowances (kg)* |
|---|---|---|
| | Hoechst Celanese Corporation | 138,865 |
| | ICI Americas, Inc | 1,264,980 |
| | Kali-Chemie Corporation | 355,440 |
| | Laroche Chemicals | 15,281,553 |
| | National Refrigerants, Inc | 2,375,384 |
| | Refricentro, Inc | 242,526 |
| CFC-113 | Allied-Signal, Inc | 18,241,928 |
| | E.I. DuPont de Nemours & Co | 49,602,858 |
| | Elf Atochem, N.A | 244,908 |
| | Holchem | 265,199 |
| | ICI Americas, Inc | 2,399,700 |
| | Refricentro, Inc | 37,385 |
| | Sumitomo Corp. of America | 280,163 |
| CFC-114 | Allied-Signal, Inc | 1,429,582 |
| | E.I. DuPont de Nemours & Co | 3,686,103 |
| | Elf Atochem, N.A | 22,880 |
| | ICI Americas, Inc | 32,930 |
| CFC-115 | E.I. DuPont de Nemours & Co | 2,764,109 |
| | Elf Atochem, N.A | 633,007 |
| | Hoechst Celanese Corporation | 8,893 |
| | ICI Americas, Inc | 2,366,351 |
| | Laroche Chemicals | 135,520 |
| | Refricentro, Inc | 27,337 |
| | (b) For Group II controlled substances: | |
| Halon-1211 | Elf Atochem, N.A | 411,292 |
| | Great Lakes Chemical Corp | 772,775 |
| | ICI Americas, Inc | 2,116,641 |
| | Kali-Chemie Corporation | 330,000 |
| Halon-1301 | E.I. DuPont de Nemours & Co | 2,772,917 |
| | Elf Atochem, N.A | 89,255 |
| | Great Lakes Chemical Corp | 1,744,132 |
| | Kali-Chemie Corporation | 54,380 |
| Halon-2402 | Ausimont | 34,400 |
| | Great Lakes Chemical Corp | 15,900 |
| | (c) For Group III controlled substances: | |
| CFC-13 | Allied-Signal, Inc | 127,124 |
| | E.I. DuPont de Nemours & Co | 158,508 |
| | Elf Atochem, N.A | 3,992 |
| | Great Lakes Chemical Corp | 56,239 |
| | ICI Americas, Inc | 5,855 |
| | Laroche Chemicals | 29,025 |
| | National Refrigerants, Inc | 16,665 |
| CFC-111 | | |
| CFC-112 | Sumitomo Corp of America | 5,912 |
| | TG (USA) Corporation | 9,253 |
| CFC-211 | E.I. DuPont de Nemours & Co | 11 |
| CFC-212 | E.I. DuPont de Nemours & Co | 11 |
| CFC-213 | E.I. DuPont de Nemours & Co | 11 |
| CFC-214 | E.I. DuPont de Nemours & Co | 11 |
| CFC-215 | E.I. DuPont de Nemours & Co | 511 |
| | Halocarbon Products Corp | 1,270 |
| CFC-216 | E.I. DuPont de Nemours & Co | 170,574 |
| CFC-217 | E.I. DuPont de Nemours & Co | 511 |
| | (d) For Group IV controlled substances: | |
| $CCl_4$ | Crescent Chemical Co | 56 |
| | Degussa Corporation | 12,466 |
| | Dow Chemical Company, USA | 8,170,561 |
| | E.I. DuPont de Nemours & Co | 26,537 |
| | Elf Atochem, N.A | 41 |
| | Hanlin Chemicals-WV, Inc | 103,133 |
| | Hoechst Celanese Corporation | 3 |
| | ICC Chemical Corp | 1,173,723 |

| *Controlled substance* | *Person* | *Allowances (kg)* |
|---|---|---|
| | ICI Americas, Inc | 855,466 |
| | Occidental Chemical Corp | 497,478 |
| | Sumitomo Corporation of America | 9 |
| | (e) For Group V controlled substances: | |
| Methyl Chloroform | 3V Chemical Corp | 3,528 |
| | Actex, Inc | 50,171 |
| | Atochem North America | 74,355 |
| | Dow Chemical Company, USA | 125,200,200 |
| | E.I. DuPont de Nemours & Co | 2 |
| | IBM | 2,026 |
| | ICI Americas, Inc | 14,179,850 |
| | Laidlaw | 420,207 |
| | PPG Industries | 45,254,115 |
| | Sumitomo | 1,954 |
| | TG (USA) Corporation | 7,073 |
| | Unitor Ships Service, Inc | 14,746 |
| | Vulcan Chemicals | 70,765,072 |
| | (f) For Group VI controlled substances: | |
| Methyl Bromide | Great Lakes Chemical Corporation | 15,514,746 |
| | Ethyl Corporation | 6,379,906 |
| | AmeriBrom, Inc | 3,524,393 |
| | TriCal, Inc | 109,225 |
| | (g) For Group VII controlled substances: | |
| HBFC 22B1–1 | Great Lakes Chemical Corporation | 40,110 |

[60 FR 24986, May 10, 1995, as amended at 68 FR 2848, Jan. 21, 2003]

### § 82.7 Grant and phase reduction of baseline production and consumption allowances for class I controlled substances.

For each control period specified in the following table, each person is granted the specified percentage of the baseline production and consumption allowances apportioned to him under §§ 82.5 and 82.6 of this subpart.

| Control period | Class I substances in groups I and III, (In percent) | Class I substances in group II, (In percent) | Class I substances in group IV (In percent) | Class I substances in group V (In percent) | Class I substances in group VI (In percent) | Class I substances in group VII (In percent) |
|---|---|---|---|---|---|---|
| 1994 | 25 | 0 | 50 | 50 | 100 | 100 |
| 1995 | 25 | 0 | 15 | 30 | 100 | 100 |
| 1996 | 0 | 0 | 0 | 0 | 100 | 0 |
| 1997 | 0 | 0 | 0 | 0 | 100 | 0 |
| 1998 | 0 | 0 | 0 | 0 | 100 | 0 |
| 1999 | 0 | 0 | 0 | 0 | 75 | 0 |
| 2000 | 0 | 0 | 0 | 0 | 75 | 0 |
| 2001 | | | | | 50 | |
| 2002 | | | | | 50 | |
| 2003 | | | | | 30 | |
| 2004 | | | | | 30 | |
| 2005 | | | | | 0 | |

[65 FR 70803, Nov. 28, 2000]

### § 82.8 Grant of essential use allowances and critical use allowances.

(a) Effective January 1, 1996, persons in the following list are allocated essential-use allowances or exemptions for quantities of a specific class I controlled substance for a specific essential-use (the Administrator reserves the right to revise the allocations

based on future decisions of the Parties).

TABLE I—ESSENTIAL USE ALLOWANCES FOR CALENDAR YEAR 2010

| (i) Metered Dose Inhalers (for oral inhalation) for Treatment of Asthma and Chronic Obstructive Pulmonary Disease | | |
|---|---|---|
| Company | Chemical | 2010 Quantity (metric tons) |
| Armstrong | CFC–11 or CFC–12 or CFC–114. | 30.0 |

(b) A global exemption for class I controlled substances for essential laboratory and analytical uses shall be in effect through December 31, 2011, subject to the restrictions in appendix G of this subpart, and subject to the recordkeeping and reporting requirements at § 82.13(u) through (x). There is no amount specified for this exemption.

(c) Effective January 1, 2005, critical use allowances are apportioned as set forth in paragraph (c)(1) of this section for the exempted production and import of class I, Group VI controlled substances specifically for those approved critical uses listed in appendix L to this subpart for the applicable control period. Every kilogram of production and import in excess of the total number and type of unexpended critical use allowances held for a particular type of use constitutes a separate violation of this subpart. Effective January 1, 2005, critical stock allowances are issued as set forth in paragraph (c)(2) of this section for the sale of class I, Group VI controlled substances from inventory produced or imported before the January 1, 2005 phase-out date specifically for those approved critical uses listed in appendix L to this subpart for the applicable control period.

(1) Allocated critical use allowances granted for specified control period.

| Company | 2010 critical use allowances for pre-plant uses* (kilograms) | 2010 critical use allowances for post-harvest uses* (kilograms) |
|---|---|---|
| Great Lakes Chemical Corp., A Chemtura Company | 1,102,380 | 86,145 |
| Albemarle Corp | 453,324 | 35,425 |
| ICL–IP America | 250,516 | 19,576 |
| TriCal, Inc | 7,800 | 610 |
| Total** | 1,814,020 | 141,755 |

*For production or import of Class I, Group VI controlled substance exclusively for the Pre-Plant or Post-Harvest uses specified in appendix L to this subpart.

**Due to rounding, numbers do not add exactly.

(2) Allocated critical stock allowances granted for specified control period. The following companies are allocated critical stock allowances for 2010 on a pro-rata basis in relation to the inventory held by each.

| Company |
|---|
| Albemarle |
| Bill Clark Pest Control, Inc. |
| Burnside Services, Inc. |
| Cardinal Professional Products |
| Chemtura Corp. |
| Degesch America, Inc. |
| Helena Chemical Co. |
| Hendrix & Dail |
| Hy-Yield Products, LLC |
| ICL–IP America |
| Industrial Fumigation Company |
| Pacific Ag |
| Pest Fog Sales Corp. |
| Prosource One |
| Reddick Fumigants |
| Royster-Clark, Inc. |
| Trical Inc. |
| Trident Agricultural Products |
| UAP Southeast (NC) |
| UAP Southeast (SC) |
| Univar |
| Western Fumigation |
| TOTAL—1,028,108 kilograms |

[69 FR 77003, Dec. 23, 2004, as amended at 70 FR 49844, Aug. 24, 2005; 70 FR 73614, Dec. 13, 2005; 70 FR 77052, Dec. 29, 2005; 71 FR 6005, Feb. 6, 2006; 71 FR 25078, Apr. 28, 2006; 71 FR 58514, Oct. 4, 2006; 71 FR 75403, Dec. 14, 2006; 72 FR 32222, June 12, 2007; 72 FR 73268, Dec. 27, 2007; 72 FR 74146, Dec. 28, 2007; 73 FR 33013, June 11, 2008; 74 FR 19897, Apr. 30, 2009; 74 FR 29957, June 24, 2009; 75 FR 23183, May 3, 2010; 75 FR 25784, May 10, 2010]

**§ 82.9 Availability of production allowances in addition to baseline production allowances for class I controlled substances.**

(a) Every person apportioned baseline production allowances for class I controlled substances under § 82.5 (a) through (f) of this subpart is also granted Article 5 allowances equal to:

(1) 10 percent of their baseline production allowances listed for class I, Group I, Group III, Group IV, and Group V controlled substances listed under § 82.5 of this subpart for each control period ending before January 1, 1996;

(2) 15 percent of their baseline production allowances for class I, Group VI controlled substances listed under § 82.5 of this subpart for each control period ending before January 1, 2005;

(3) 15 percent of their baseline production allowances for class I, Group II controlled substances listed under § 82.5 of this subpart for each control period beginning January 1, 1994, until January 1, 2003;

(4) 15 percent of their baseline production allowances for Class I, Group IV and Group V controlled substances listed under § 82.5 of this subpart for each control period beginning January 1, 1996 until January 1, 2010;

(b) Effective January 1, 1995, a person allocated Article 5 allowances may produce class I controlled substances for export to Article 5 countries as under § 82.11 and transfer Article 5 allowances as under § 82.12.

(c) A company may increase or decrease its production allowances, its Article 5 allowances by trading with another Party to the Protocol according to the provision under this paragraph (c). A company may increase or decrease its essential-use allowances for CFCs for use in essential MDIs according to the provisions under this paragraph (c). A nation listed in appendix C to this subpart (Parties to the Montreal Protocol) must agree either to transfer to the person for the current control period some amount of production or import that the nation is permitted under the Montreal Protocol or to receive from the person for the current control period some amount of production or import that the person is permitted under this subpart. If the controlled substance is produced under the authority of production allowances and is to be returned to the Party from whom production allowances are received, the request for production allowances shall also be considered a request for consumption allowances under § 82.10(c). If the controlled substance is produced under the authority of production allowances and is to be sold in the United States or to another Party (not the Party from whom the allowances are received), the U.S. company must expend its consumption allowances allocated under § 82.6 and § 82.7 in order to produce with the additional production allowances.

(1) For trades from a Party, the person must obtain from the principal diplomatic representative in that nation's embassy in the United States a signed document stating that the appropriate authority within that nation has established or revised production limits or essential-use allowance limits for the nation to equal the lesser of the maximum production that the nation is allowed under the Protocol minus the amount transferred, the maximum production or essential-use allowances that are allowed under the nation's applicable domestic law minus the amount transferred, or the average of the nation's actual national production level for the three years prior to the transfer minus the production transferred. The person must submit to the Administrator a transfer request that includes a true copy of this document and that sets forth the following:

(i) The identity and address of the person;

(ii) The identity of the Party;

(iii) The names and telephone numbers of contact persons for the person and for the Party;

(iv) The chemical type, type of allowance being transferred, and the level of allowances being transferred;

(v) The control period(s) to which the transfer applies; and

(vi) For increased production intended for export to the Party from whom the allowances would be received, a signed statement of intent to export to the Party.

(vii) In the case of transferring essential-use allowances, the transferor must include a signed document from

the transferee identifying the CFC MDI products that will be produced using the essential-use allowances.

(2) For trades to a Party, a person must submit a transfer request that sets forth the following:

(i) The identity and address of the person;

(ii) The identity of the Party;

(iii) The names and telephone numbers of contact persons for the person and for the Party;

(iv) The chemical type, type of allowance being transferred, and the level of allowances being transferred; and

(v) The control period(s) to which the transfer applies.

(3) After receiving a transfer request that meets the requirements of paragraph (c)(2) of this section, the Administrator may, at his discretion, consider the following factors in deciding whether to approve such a transfer:

(i) Possible creation of economic hardship;

(ii) Possible effects on trade;

(iii) Potential environmental implications; and

(iv) The total amount of unexpended production or essential-use allowances held by a U.S. entity.

(v) In the case of transfer of essential-use allowances the Administrator may consider whether the CFCs will be used for production of essential MDIs.

(4) The Administrator will issue the person a notice either granting or deducting production allowances, Article 5 allowances, or essential-use allowances, and specifying the control period to which the transfer applies, provided that the request meets the requirement of paragraph (c)(1) of this sections for trades from Parties and paragraph (c)(2) of this section for trades to Parties, unless the Administrator has decided to disapprove the trade under paragraph (c)(3) of this section. For a trade from a Party, the Administrator will issue a notice that revises the allowances held by the person to equal the unexpended production, Article 5, or essential-use allowances held by the person under this subpart plus the level of allowable production transferred from the Party. For a trade to a Party, the Administrator will issue a notice that revises the production limit for the person to equal the lesser of:

(i) The unexpended production allowances, essential-use allowances, or Article 5 allowances held by the person under this subpart minus the amount transferred; or

(ii) The unexpended production allowances, essential-use allowances, or Article 5 allowances held by the person under this subpart minus the amount by which the United States average annual production of the controlled substance being traded for the three years prior to the transfer is less than the total production allowable for that substance under this subpart minus the amount transferred. The change in allowances will be effective on the date that the notice is issued.

(5) If after one person obtains approval for a trade of allowable production of a controlled substance to a Party, one or more other persons obtain approval for trades involving the same controlled substance and the same control period, the Administrator will issue notices revising the production limits for each of the other persons trading that controlled substance in that control period to equal the lesser of:

(i) The unexpended production allowances or Article 5 allowances held by the person under this subpart minus the amount transferred; or

(ii) The unexpended production allowances or Article 5 allowances held by the person under this subpart minus the amount by which the United States average annual production of the controlled substance being traded for the three years prior to the transfer is less than the total allowable production for that substance under this subpart multiplied by the amount transferred divided by the total amount transferred by all the other persons trading the same controlled substance in the same control period minus the amount transferred by that person.

(iii) The Administrator will also issue a notice revising the production limit for each person who previously obtained approval of a trade of that substance in that control period to equal the unexpended production allowances or unexpended Article 5 allowances held by the person under this

subpart plus the amount by which the United States average annual production of the controlled substance being traded for the three years prior to the transfer is less than the total allowable production under this subpart multiplied by the amount transferred by that person divided by the amount transferred by all of the persons who have traded that controlled substance in that control period. The change in production allowances or Article 5 allowances will be effective on the date that the notice is issued.

(d) Effective January 1, 1996, there will be no trade in production or consumption allowances with other Parties to the Protocol for class I controlled substances, except for class I, Group VI, methyl bromide.

(e) Until January 1, 1996 for all class I controlled substances, except Group VI, and until January 1, 2005 for class I, Group VI, a person may obtain production allowances for that controlled substance equal to the amount of that controlled substance produced in the United States that was transformed or destroyed within the United States, or transformed or destroyed by a person of another Party, in the cases where production allowances were expended to produce such substance in the U.S. in accordance with the provisions of this paragraph. A request for production allowances under this section will be considered a request for consumption allowances under § 82.10(b).

(1) Until January 1, 1996, for all class I controlled substances, except Group VI, and until January 1, 2005, for class I, Group VI, a person must submit a request for production allowances that includes the following:

(i) The name, address, and telephone number of the person requesting the allowances, and the Employer Identification Number if the controlled substance is being exported;

(ii) The name, quantity, and level of controlled substance transformed or the name, quantity and volume destroyed, and the commodity code if the substance was exported;

(iii) A copy of the invoice or receipt documenting the sale of the controlled substance, including the name, address, contact person and telephone number of the transformer or destroyer;

(iv) A certification that production allowances were expended for the production of the controlled substance, and the date of purchase, if applicable;

(v) If the controlled substance is transformed, the name, quantity, and verification of the commercial use of the resulting chemical and a copy of the IRS certificate of intent to use the controlled substance as a feedstock; and,

(vi) If the controlled substance is destroyed, the verification of the destruction efficiency.

(2) Until January 1, 1996 for all class I controlled substances, except Group VI, and until January 1, 2005, for class I, Group VI, the Administrator will review the information and documentation submitted under paragraph (e)(1) of this section and will assess the quantity of class I controlled substance that the documentation and information verifies was transformed or destroyed. The Administrator will issue the person production allowances equivalent to the controlled substances that the Administrator determines were transformed or destroyed. For controlled substances completely destroyed under this rule, the Agency will grant allowances equal to 100 percent of volume intended for destruction. For those controlled substances destroyed at less than a 98 percent destruction efficiency, the Agency will grant allowances commensurate with that percentage of destruction efficiency that is actually achieved. The grant of allowances will be effective on the date that the notice is issued.

(3) Until January 1, 1996 for all class I controlled substances, except Group VI, and until January 1, 2005, for class I, Group VI, if the Administrator determines that the request for production allowances does not satisfactorily substantiate that the person transformed or destroyed controlled substances as claimed, or that modified allowances were not expended, the Administrator will issue a notice disallowing the request for additional production allowances. Within ten working days after receipt of notification, the person may file a notice of appeal, with supporting reasons, with the Administrator. The Administrator may affirm the disallowance or grant an allowance, as

she/he finds appropriate in light of the available evidence. If no appeal is taken by the tenth day after notification, the disallowance will be final on that day.

(f) Effective January 1, 1996, and until January 1, 2000, a person who was nominated by the United States to the Secretariat of the Montreal Protocol for an essential use exemption may obtain destruction and transformation credits for a class I controlled substance (except class I, Group VI) equal to the amount of that controlled substance produced in the United States that was destroyed or transformed within the United States in cases where the controlled substance was produced for other than destruction or transformation in accordance with the provisions of this subpart, subtracting an offset of 15 percent.

(1) Effective January 1, 1996, and until January 1, 2000, a person must submit a request for destruction and transformation credits that includes the following:

(i) The identity and address of the person and the essential-use exemption and years for which the person was nominated to the Secretariat of the Montreal Protocol;

(ii) The name, quantity and volume of controlled substance destroyed or transformed;

(iii) A copy of the invoice or receipt documenting the sale or transfer of the controlled substance to the person;

(iv) A certification of the previous use of the controlled substance;

(v) For destruction credits, a certification that the controlled substance was destroyed and a certification of the efficiency of the destruction process; and

(vi) For transformation credits, an IRS certificate of feedstock use or transformation of the controlled substance.

(2) Effective January 1, 1996, and until January 1, 2000, the Administrator will issue the person destruction and transformation credits equivalent to the class I controlled substance (except class I, Group VI) recovered from a use system in the United States, that the Administrator determines were destroyed or transformed, subtracting the offset of 15 percent. For controlled substances completely destroyed under this rule, the Agency will grant destruction credits equal to 100 percent of volume destroyed minus the offset. For those controlled substances destroyed at less than a 98 percent destruction efficiency, the Agency will grant destruction credits commensurate with that percentage of destruction efficiency that is actually achieved minus the offset. The grant of credits will be effective on the date that the notice is issued.

(3) Effective January 1, 1996, and until January 1, 2000, if the Administrator determines that the request for destruction and transformation credits does not satisfactorily substantiate that the person was nominated for an essential-use exemption by the United States to the Secretariat for the Montreal Protocol for the control period, or that the person destroyed or transformed a class I controlled substance as claimed, or that the controlled substance was not recovered from a U.S. use system the Administrator will issue a notice disallowing the request for additional destruction and transformation credits. Within ten working days after receipt of notification, the person may file a notice of appeal, with supporting reasons, with the Administrator. The Administrator may affirm the disallowance or grant an allowance, as she/he finds appropriate in light of the available evidence. If no appeal is taken by the tenth day after notification, the disallowance will be final on that day.

(g) *International transfer of essential-use CFCs.* (1) For trades of essential-use CFCs where the transferee or the transferor is a person in another nation (Party), the persons involved in the transfer must submit the information requested in § 82.12(d)(2) and (d)(3), along with a signed document from the principal diplomatic representative in the Party's embassy in the United States stating that the appropriate authority within that nation has approved the transfer of the essential-use CFCs.

(2) If the transfer claim is complete, and EPA does not object to the transfer, then EPA will issue letters to the transferor and the transferee indicating that the transfer may proceed.

EPA reserves the right to disallow a transfer if the transfer request is incomplete, or if it has reason to believe that the transferee plans to produce MDIs that are not essential MDIs. If EPA objects to the transfer, EPA will issue letters to the transferor and transferee stating the basis for disallowing the transfer. The burden of proof is placed on the transferee to retain sufficient records to prove that the transferred essential-use CFCs are used only for production of essential MDIs. If EPA ultimately finds that the transferee did not use the essential-use CFCs for production of essential MDIs then the transferee is in violation of this subpart.

[60 FR 24986, May 10, 1995, as amended at 63 FR 41643, Aug. 4, 1998; 63 FR 53290, Oct. 5, 1998; 65 FR 70804, Nov. 28, 2000; 67 FR 6360, Feb. 11, 2002; 67 FR 21134, Apr. 29, 2002; 70 FR 77047, Dec. 29, 2005]

### § 82.10 Availability of consumption allowances in addition to baseline consumption allowances for class I controlled substances.

(a) Until January 1, 1996 for all class I controlled substances, except Group VI, and until January 1, 2005, for class I, Group VI, any person may obtain, in accordance with the provisions of this subsection, consumption allowances equivalent to the level of class I controlled substances (other than used controlled substances or transhipments) that the person has exported from the United States and its territories to a Party (as listed in appendix C to this subpart).

(1) Until January 1, 1996 for all class I controlled substances, except Group VI, and until January 1, 2005, for class I, Group VI, to receive consumption allowances in addition to baseline consumption allowances, the exporter of the class I controlled substances must submit to the Administrator a request for consumption allowances setting forth the following:

(i) The identities and addresses of the exporter and the recipient of the exports;

(ii) The exporter's Employer Identification Number;

(iii) The names and telephone numbers of contact persons for the exporter and the recipient;

(iv) The quantity and type of controlled substances exported;

(v) The source of the controlled substance and the date purchased;

(vi) The date on which, and the port from which, the controlled substances were exported from the United States or its territories;

(vii) The country to which the controlled substances were exported;

(viii) A copy of the bill of lading and the invoice indicating the net quantity of controlled substances shipped and documenting the sale of the controlled substances to the purchaser.

(ix) The commodity code of the controlled substance exported; and

(x) Written statement from the producer that the controlled substance was produced with expended allowances.

(2) The Administrator will review the information and documentation submitted under paragraph (a)(1) of this section and will assess the quantity of controlled substances that the documentation verifies was exported. The Administrator will issue the exporter consumption allowances equivalent to the level of controlled substances that the Administrator determined were exported. The grant of the consumption allowances will be effective on the date the notice is issued. If the Administrator determines that the information and documentation does not satisfactorily substantiate that the person exported controlled substances as claimed the Administrator will issue a notice that the consumption allowances are not granted.

(b) Until January 1, 1996, a person may obtain consumption allowances for a class I controlled substance (and until January 1, 2005 for class I, Group VI) equal to the amount of a controlled substance either produced in, or imported into, the United States that was transformed or destroyed in the case where consumption allowances were expended to produce or import such substance in accordance with the provisions of this paragraph. However, a person producing or importing a controlled substance (except class I, Group VI) that was transformed or destroyed must submit to the Administrator the information described under § 82.13 (f)(3) (i) and (ii).

(c) A company may also increase its consumption allowances by receiving production from another Party to the Protocol for class I, Group I through Group V and Group VII controlled substances until January 1, 1996 and for class I, Group VI controlled substances until January 1, 2005. A nation listed in appendix C to this subpart (Parties to the Montreal Protocol) must agree to transfer to the person for the current control period some amount of production that the nation is permitted under the Montreal Protocol. If the controlled substance is to be returned to the Party from whom allowances are received, the request for consumption allowances shall also be considered a request for production allowances under § 82.9(c). For trades from a Party, the person must obtain from the principal diplomatic representative in that nation's embassy in the United States a signed document stating that the appropriate authority within that nation has established or revised production limits for the nation to equal the lesser of the maximum production that the nation is allowed under the Protocol minus the amount transferred, the maximum production that is allowed under the nation's applicable domestic law minus the amount transferred, or the average of the nation's actual national production level for the three years prior to the transfer minus the production allowances transferred. The person must submit to the Administrator a transfer request that includes a true copy of this document and that sets forth the following:

(1) The identity and address of the person;

(2) The identity of the Party;

(3) The names and telephone numbers of contact persons for the person and for the Party;

(4) The chemical type and level of production being transferred;

(5) The control period(s) to which the transfer applies; and

(6) For increased production intended for export to the Party from whom allowances would be received, a signed statement of intent to export to this Party.

(d) On the first day of each control period, until January 1, 1996, the Agency will grant consumption allowances to any person that produced and exported a Group IV controlled substance in the baseline year and that was not granted baseline consumption allowances under § 82.5.

(1) The number of consumption allowances any such person will be granted for each control period will be equal to the number of production allowances granted to that person under § 82.7 for that control period.

(2) Any person granted allowances under this paragraph must hold the same number of unexpended consumption allowances for the control period for which the allowances were granted by February 15 of the following control period. Every kilogram by which the person's unexpended consumption allowances fall short of the amount the person was granted under this paragraph constitutes a separate violation.

[60 FR 24986, May 10, 1995, as amended at 65 FR 70804, Nov. 28, 2000]

### § 82.11 Exports of class I controlled substances to Article 5 Parties.

(a) If apportioned Article 5 allowances under § 82.9(a) or § 82.11(a)(2), a person may produce Class I controlled substances, in accordance with the prohibitions in § 82.4 and the reduction schedule in § 82.11(a)(3), to be exported (not including exports resulting in transformation or destruction, or exports of used controlled substances) to foreign states listed in appendix E to this subpart (Article 5 countries).

(1) A person must submit a notice to the Administrator of exports to Article 5 countries (except exports resulting in transformation or destruction, or used controlled substances) at the end of the quarter that includes the following:

(i) The identities and addresses of the exporter and the Article 5 country recipient of the exports;

(ii) The exporter's Employee Identification Number;

(iii) The names and telephone numbers of contact persons for the exporter and for the recipient;

(iv) The quantity and the type of controlled substances exported, its source and date purchased;

(v) The date on which, and the port from which, the controlled substances were exported from the United States or its territories;

(vi) The Article 5 country to which the controlled substances were exported;

(vii) A copy of the bill of lading and invoice indicating the net quantity shipped and documenting the sale of the controlled substances to the Article 5 purchaser;

(viii) The commodity code of the controlled substance exported; and

(ix) A copy of the invoice or sales agreement covering the sale of the controlled substances to the recipient Article 5 country that contains provisions forbidding the reexport of the controlled substance in bulk form and subjecting the recipient or any transferee of the recipient to liquidated damages equal to the resale price of the controlled substances if they are reexported in bulk form.

(2) Persons who reported exports of Class I, Group I controlled substances to Article 5 countries in 2000–2003 are apportioned baseline Article 5 allowances as set forth in § 82.11(a)(2)(i). Persons who reported exports of Class I, Group VI controlled substances to Article 5 countries in 1995–1998 are apportioned baseline Article 5 allowances as set forth in § 82.11(a)(2)(ii)).

(i) For Group I Controlled Substances

| Controlled Substance | Person | Allowances (kg) |
|---|---|---|
| CFC–11 | Honeywell | 7,150 |
| | Sigma Aldrich | 1 |
| CFC–113 | Fisher Scientific | 5 |
| | Honeywell | 313,686 |
| | Sigma Aldrich | 48 |
| CFC–114 | Honeywell | 24,798 |
| | Sigma Aldrich | 1 |

(ii) For Group VI Controlled Substances

| Controlled Substance | Person | Allowances (kg) |
|---|---|---|
| Methyl Bromide | Albemarle | 1,152,714 |
| | Ameribrom | 176,903 |
| | Great Lakes Chemical Corporation. | 3,825,846 |

(3) Phased Reduction Schedule for Article 5 Allowances allocated in § 82.11. For each control period specified in the following table, each person is granted the specified percentage of the baseline Article 5 allowances apportioned under § 82.11.

| Control Period | Class I substances in group I (In percent) | Class I substances in group VI (In percent) |
|---|---|---|
| 2006 | 50 | 80 |
| 2007 | 15 | 80 |
| 2008 | 15 | 80 |
| 2009 | 15 | 80 |
| 2010 | 0 | 80 |
| 2011 | 0 | 80 |
| 2012 | 0 | 80 |
| 2013 | 0 | 80 |
| 2014 | 0 | 80 |
| 2015 | 0 | 0 |

(2) [Reserved]

(b) [Reserved]

[60 FR 24986, May 10, 1995, as amended at 70 FR 77047, Dec. 29, 2005]

## § 82.12 Transfers of allowances for class I controlled substances.

(a) *Inter-company transfers.* (1) Until January 1, 1996, for all class I controlled substances, except for Group VI, and until January 1, 2005, for Group VI, any person (''transferor'') may transfer to any other person (''transferee'') any amount of the transferor's consumption allowances or production allowances, and effective January 1, 1995, for all class I controlled substances any person (''transferor'') may transfer to any other person (''transferee'') any amount of the transferor's Article 5 allowances. After January 1, 2002, any essential-use allowance holder (including those persons that hold essential-use allowances issued by a Party other than the United States) (''transferor'') may transfer essential-use allowances for CFCs to a metered dose inhaler company solely for the manufacture of essential MDIs. After January 1, 2005, any critical use allowance holder (''transferor'') may transfer critical use allowances to any other person (''transferee''). After January 1, 2005, any critical stock allowance holder (''transferor'') may transfer critical stock allowances to any critical stock allowance holder or any methyl bromide producer, importer, distributer or third party applicator (''transferee'').

(i) The transferor must submit to the Administrator a transfer claim setting forth the following:

(A) The identities and addresses of the transferor and the transferee;

(B) The name and telephone numbers of contact persons for the transferor and the transferee;

(C) The type of allowances being transferred, including the names of the controlled substances for which allowances are to be transferred;

(D) The group of controlled substances to which the allowances being transferred pertains;

(E) The amount of allowances being transferred;

(F) The control period(s) for which the allowances are being transferred;

(G) The amount of unexpended allowances of the type and for the control period being transferred that the transferor holds under authority of this subpart as of the date the claim is submitted to EPA; and

(H) The one percent offset applied to the unweighted amount traded will be deducted from the transferor's production or consumption allowance balance (except for trades from transformers and destroyers to producers or importers for the purpose of allowance reimbursement). In the case of transferring essential use allowances, the amount of one tenth of one percent of the amount traded will be deducted from the transferor's allowance balance. In the case of transferring critical use allowances, the amount of one tenth of one percent of the amount traded will be deducted from the transferor's critical use allowance balance.

(I) The transferor must include a signed document from the transferee identifying the CFC MDI products that will be produced using the essential-use allowances.

(ii) The Administrator will determine whether the records maintained by EPA, taking into account any previous transfers and any production, allowable imports and exports of controlled substances reported by the transferor, indicate that the transferor possesses, as of the date the transfer claim is processed, unexpended allowances sufficient to cover the transfer claim (*i.e.*, the amount to be transferred plus, in the case of transferors of essential use allowances and critical use allowances, one tenth of one percent of the transferred amount). Within three working days of receiving a complete transfer claim, the Administrator will take action to notify the transferor and transferee as follows:

(A) If EPA's records show that the transferor has sufficient unexpended allowances to cover the transfer claim, the Administrator will issue a notice indicating that EPA does not object to the transfer and will reduce the transferor's balance of unexpended allowances by the amount to be transferred plus, in the case of transfers of production or consumption allowances, one percent of that amount, or in the case of transfers of essential use allowances, one tenth of one percent of that amount. When EPA issues a no objection notice, the transferor and the transferee may proceed with the transfer. However, if EPA ultimately finds that the transferor did not have sufficient unexpended allowances to cover the claim, the transferor and transferee will be held liable for any violations of the regulations of this subpart that occur as a result of, or in conjunction with, the improper transfer.

(B) If EPA's records show that the transferor has insufficient unexpended allowances to cover the transfer claim, or that the transferor has failed to respond to one or more Agency requests to supply information needed to make a determination, the Administrator will issue a notice disallowing the transfer. Within 10 working days after receipt of notification, either party may file a notice of appeal, with supporting reasons, with the Administrator. The Administrator may affirm or vacate the disallowance. If no appeal is taken by the tenth working day after notification, the disallowance shall be final on that day.

(iii) In the event that the Administrator does not respond to a transfer claim within the three working days specified in paragraph (a)(1)(ii) of this section the transferor and transferee may proceed with the transfer. EPA will reduce the transferor's balance of unexpended allowances by the amount to be transferred plus, in the case of transfers of production or consumption allowances, one percent of that amount, and in the case of essential use allowances and critical use allowances, one tenth of one percent of that amount. However if EPA ultimately finds that the transferor did not have

sufficient unexpended allowances to cover the claim, the transferor and transferee will be held liable for any violations of the regulations of this subpart that occur as a result of, or in conjunction with, the improper transfer.

(2) Effective January 1, 1996, any person (''transferor'') may transfer to an eligible person (''transferee'') as defined in § 82.9 any amount of the transferor's destruction and transformation credits. The transfer proceeds as follows:

(i) The transferor must submit to the Administrator a transfer claim setting forth the following:

(A) The identities and addresses of the transferor and the transferee;

(B) The name and telephone numbers of contact persons for the transferor and the transferee;

(C) The type of credits being transferred, including the names of the controlled substances for which credits are to be transferred;

(D) The group of controlled substances to which the credits being transferred pertains;

(E) The amount of destruction and transformation credits being transferred;

(F) The control period(s) for which the destruction and transformation credits are being transferred;

(G) The amount of unexpended destruction and transformation credits for the control period being transferred that the transferor holds under authority of this subpart as of the date the claim is submitted to EPA; and

(H) The amount of the one-percent offset applied to the unweighted amount traded that will be deducted from the transferor's balance.

(ii) The Administrator will determine whether the records maintained by EPA, taking into account any previous transfers and any production of controlled substances reported by the transferor, indicate that the transferor possesses, as of the date the transfer claim is processed, unexpended destruction and transformation credits sufficient to cover the transfer claim (i.e., the amount to be transferred plus one percent of that amount). Within three working days of receiving a complete transfer claim, the Administrator will take action to notify the transferor and transferee as follows:

(A) If EPA's records show that the transferor has sufficient unexpended destruction and transformation credits to cover the transfer claim, the Administrator will issue a notice indicating that EPA does not object to the transfer and will reduce the transferor's balance of unexpended or credits by the amount to be transferred plus one percent of that amount. When EPA issues a no objection notice, the transferor and the transferee may proceed with the transfer. However, if EPA ultimately finds that the transferor did not have sufficient unexpended credits to cover the claim, the transferor and transferee will be held liable for any violations of the regulations of this subpart that occur as a result of, or in conjunction with, the improper transfer.

(B) If EPA's records show that the transferor has insufficient unexpended destruction and transformation credits to cover the transfer claim, or that the transferor has failed to respond to one or more Agency requests to supply information needed to make a determination, the Administrator will issue a notice disallowing the transfer. Within 10 working days after receipt of notification, either party may file a notice of appeal, with supporting reasons, with the Administrator. The Administrator may affirm or vacate the disallowance. If no appeal is taken by the tenth working day after notification, the disallowance shall be final on that day.

(iii) In the event that the Administrator does not respond to a transfer claim within the three working days specified in paragraph (a)(2)(ii) of this section, the transferor and transferee may proceed with the transfer. EPA will reduce the transferor's balance of unexpended destruction and transformation credits by the amount to be transferred plus one percent of that amount. However, if EPA ultimately finds that the transferor did not have sufficient unexpended credits to cover the claim, the transferor and transferee will be held liable for any violations of the regulations of this subpart that occur as a result of, or in conjunction with, the improper transfer.

(b) Inter-pollutant conversions.

(1) Until January 1, 1996, for all class I controlled substances, except Group VI, and until January 1, 2005 for Group VI, any person (''convertor'') may convert consumption allowances or production allowances for one class I controlled substance to the same type of allowance for another class I controlled substance within the same Group as the first as listed in appendix A of this subpart, following the procedures described in paragraph (b)(4) of this section.

(2) Effective January 1, 1995, any person (''convertor'') may convert Article 5 allowances for one class I controlled substance to the same type of allowance for another class I controlled substance within the same Group of controlled substances as the first as listed in appendix A of this subpart, following the procedures described in paragraph (b)(4) of this section.

(3) Effective January 1, 1996, any person (''convertor'') may convert destruction and/or transformation credits for one class I controlled substance to the same type of credits for another class I controlled substance within the same Group of controlled substances as the first as listed in appendix A of this subpart, following the procedures in paragraph (b)(4) of this section.

(4) The convertor must submit to the Administrator a conversion claim.

(i) The conversion claim would include the following:

(A) The identity and address of the convertor;

(B) The name and telephone number of a contact person for the convertor;

(C) The type of allowances or credits being converted, including the names of the controlled substances for which allowances or credits are to be converted;

(D) The group of controlled substances to which the allowances or credits being converted pertains;

(E) The amount and type of allowances or credits to be converted;

(F) The amount of allowances or credits to be subtracted from the convertor's unexpended allowances or credits for the first controlled substance, to be equal to 101 percent of the amount of allowances or credits converted;

(G) The amount of allowances or credits to be added to the convertor's unexpended allowances or credits for the second controlled substance, to be equal to the amount of allowances or credits for the first controlled substance being converted multiplied by the quotient of the ozone depletion factor of the first controlled substance divided by the ozone depletion factor of the second controlled substance, as listed in appendix A to this subpart;

(H) The control period(s) for which the allowances or credits are being converted; and

(I) The amount of unexpended allowances or credits of the type and for the control period being converted that the convertor holds under authority of this subpart as of the date the claim is submitted to EPA.

(ii) The Administrator will determine whether the records maintained by EPA, taking into account any previous conversions, any transfers, any credits, and any production, imports (not including transhipments or used controlled substances), or exports (not including transhipments or used controlled substances) of controlled substances reported by the convertor, indicate that the convertor possesses, as of the date the conversion claim is processed, unexpended allowances or credits sufficient to cover the conversion claim (i.e., the amount to be converted plus one percent of that amount). Within three working days of receiving a complete conversion claim, the Administrator will take action to notify the convertor as follows:

(A) If EPA's records show that the convertor has sufficient unexpended allowances or credits to cover the conversion claim, the Administrator will issue a notice indicating that EPA does not object to the conversion and will reduce the convertor's balance of unexpended allowances or credits by the amount to be converted plus one percent of that amount. When EPA issues a no objection notice, the convertor may proceed with the conversion. However, if EPA ultimately finds that the convertor did not have sufficient unexpended allowances or credits to cover the claim, the convertor will be held

liable for any violations of the regulations of this subpart that occur as a result of, or in conjunction with, the improper conversion.

(B) If EPA's records show that the convertor has insufficient unexpended allowances or credits to cover the conversion claim, or that the convertor has failed to respond to one or more Agency requests to supply information needed to make a determination, the Administrator will issue a notice disallowing the conversion. Within 10 working days after receipt of notification, the convertor may file a notice of appeal, with supporting reasons, with the Administrator. The Administrator may affirm or vacate the disallowance. If no appeal is taken by the tenth working day after notification, the disallowance shall be final on that day.

(iii) In the event that the Administrator does not respond to a conversion claim within the three working days specified in paragraph (b)(4)(ii) of this section, the convertor may proceed with the conversion. EPA will reduce the convertor's balance of unexpended allowances or credits by the amount to be converted plus one percent of that amount. However, if EPA ultimately finds that the convertor did not have sufficient unexpended allowances or credits to cover the claims, the convertor will be held liable for any violations of the regulations of this subpart that occur as a result of, or in conjunction with, the improper conversion.

(5) Effective January 1, 1995, and for every control period thereafter, inter-pollutant trades will be permitted during the 45 days after the end of a control period.

(c) Inter-company transfers and Inter-pollutant conversions.

(1) Until January 1, 1996, for production and consumption allowances; effective January 1, 1995, for Article 5 allowances; and effective January 1, 1996, for destruction and/or transformation credits; if a person requests an inter-company transfer and an inter-pollutant conversion simultaneously, the amount subtracted from the convertor-transferor's unexpended allowances or unexpended credits for the first controlled substance will be equal to 101 percent of the amount of allowances or credits that are being converted and transferred.

(2) [Reserved]

(d) *Transfers of essential-use CFCs.* (1) Effective January 1, 2002, any metered dose inhaler company (transferor) may transfer essential-use CFCs to another metered dose inhaler company (transferee) provided that the Administrator approves the transfer.

(2) The transferee must submit a transfer claim to the Administrator for approval before the transfer can take place. The transfer claim must set forth the following:

(i) The identities and addresses of the transferor and the transferee; and

(ii) The name and telephone numbers of contact persons for the transferor and the transferee; and

(iii) The amount of each controlled substance (CFC-11, CFC-12, or CFC-114) being transferred; and

(iv) The specific metered dose inhaler products (i.e. the MDI drug product or active moiety) that the transferee plans to produce with the transferred CFCs; and

(v) The country(ies) where the CFC metered dose inhalers produced with the transferred essential-use CFCs will be sold if other than in the United States; and

(vi) Certification that the essential-use CFCs will be used in the production of essential MDIs. If the MDIs are to be sold in the United States, the certification must state that MDIs produced with the transferred essential-use CFCs are listed as essential at 21 CFR 2.125, and were approved by the Food and Drug Administration before December 31, 2000. If the MDIs produced with the essential-use CFCs are to be sold outside the United States, the transferee must certify that the metered dose inhalers produced with the essential-use CFCs are considered essential by the importing country.

(3) The transferor must submit a letter stating that it concurs with the terms of the transfer as requested by the transferee.

(4) Once the transfer claim is complete, and if EPA does not object to the transfer, then EPA will issue letters to the transferor and the transferee within 10 business days indicating that the transfer may proceed. EPA reserves the

right to disallow a transfer if the transfer request is incomplete, or if it has reason to believe that the transferee plans use the essential-use CFCs in anything other than essential MDIs. If EPA objects to the transfer, within EPA will issue letters to the transferor and transferee stating the basis for disallowing the transfer. The burden of proof is placed on the transferee to retain sufficient records to prove that the transferred essential-use CFCs are used only for production of essential MDIs. If EPA ultimately finds that the transferee did not use the essential-use CFCs for production of essential MDIs then the transferee is in violation of this subpart.

(e) Exchange of Critical Use Allowances for Critical Stock Allowances. (1) Critical use allowance holders may petition the Administrator to exchange a quantity of their unexpended critical use allowances for an equivalent amount of critical stock allowances. A person allocated critical stock allowances may not petition to exchange unexpended critical stock allowances for critical use allowances.

(2) [Reserved]

[60 FR 24986, May 10, 1995, as amended at 65 FR 70804, Nov. 28, 2000; 66 FR 1471, Jan. 8, 2001; 67 FR 6361, Feb. 11, 2002; 69 FR 77004, Dec. 23, 2004]

### § 82.13 Recordkeeping and reporting requirements for class I controlled substances.

(a) Unless otherwise specified, the recordkeeping and reporting requirements set forth in this section take effect on January 1, 1995. For class I, Group VIII controlled substances, the recordkeeping and reporting requirements set forth in this section take effect on August 18, 2003. For class I, Group VI critical use methyl bromide, the recordkeeping and reporting requirements set forth in this section take effect January 1, 2005.

(b) Reports and records required by this section may be used for purposes of compliance determinations. These requirements are not intended as a limitation on the use of other evidence admissible under the Federal Rules of Evidence. Failure to provide the reports, petitions and records required by this section, and to certify the accuracy of the information in the reports, petitions and records required by this section, will be considered a violation of this subpart. False statements made in reports, petitions and records will be considered violations of Section 113 of the Clean Air Act.

(c) Unless otherwise specified, reports required by this section must be mailed to the Administrator within 45 days of the end of the applicable reporting period.

(d) Records and copies of reports required by this section must be retained for three years.

(e) In reports required by this section, quantities of controlled substances must be stated in terms of kilograms.

(f) Every person (''producer'') who produces class I controlled substances during a control period must comply with the following recordkeeping and reporting requirements:

(1) Within 120 days of May 10, 1995, or within 120 days of the date that a producer first produces a class I controlled substance, whichever is later, and within 120 days of July 18, 2003 for class I, Group VIII controlled substances, every producer who has not already done so must submit to the Administrator a report describing:

(i) The method by which the producer in practice measures daily quantities of controlled substances produced;

(ii) Conversion factors by which the daily records as currently maintained can be converted into kilograms of controlled substances produced, including any constants or assumptions used in making those calculations (e.g., tank specifications, ambient temperature or pressure, density of the controlled substance);

(iii) Internal accounting procedures for determining plant-wide production;

(iv) The quantity of any fugitive losses accounted for in the production figures; and

(v) The estimated percent efficiency of the production process for the controlled substance. Within 60 days of any change in the measurement procedures or the information specified in the above report, the producer must submit a report specifying the revised data or procedures to the Administrator.

(2) Every producer of a class I controlled substance during a control period must maintain the following records:

(i) Dated records of the quantity of each controlled substance produced at each facility;

(ii) Dated records of the quantity of controlled substances produced for use in processes that result in their transformation or for use in processes that result in their destruction and quantity sold for use in processes that result in their transformation or for use in processes that result in their destruction;

(iii) Dated records of the quantity of controlled substances produced for an essential-use and quantity sold for use in an essential-use process;

(iv) Dated records of the quantity of controlled substances produced with expended destruction and/or transformation credits;

(v) Dated records of the quantity of controlled substances produced with Article 5 allowances;

(vi) Copies of invoices or receipts documenting sale of controlled substance for use in processes resulting in their transformation or for use in processes resulting in destruction;

(vii) Dated records of the quantity of each controlled substance used at each facility as feedstocks or destroyed in the manufacture of a controlled substance or in the manufacture of any other substance, and any controlled substance introduced into the production process of the same controlled substance at each facility;

(viii) Dated records identifying the quantity of each chemical not a controlled substance produced within each facility also producing one or more controlled substances;

(ix) Dated records of the quantity of raw materials and feedstock chemicals used at each facility for the production of controlled substances;

(x) Dated records of the shipments of each controlled substance produced at each plant;

(xi) The quantity of controlled substances, the date received, and names and addresses of the source of used materials containing controlled substances which are recycled or reclaimed at each plant;

(xii) Records of the date, the controlled substance, and the estimated quantity of any spill or release of a controlled substance that equals or exceeds 100 pounds;

(xiii) Internal Revenue Service Certificates in the case of transformation, or the destruction verification in the case of destruction (as in §82.13(k)), showing that the purchaser or recipient of a controlled substance, in the United States or in another country that is a Party, certifies the intent to either transform or destroy the controlled substance, or sell the controlled substance for transformation or destruction in cases when production and consumption allowances were not expended;

(xiv) Written verifications that essential-use allowances were conveyed to the producer for the production of specified quantities of a specific controlled substance that will only be used for the named essential-use and not resold or used in any other manufacturing process.

(xv) Written certifications that quantities of controlled substances, meeting the purity criteria in appendix G of this subpart, were purchased by distributors of laboratory supplies or by laboratory customers to be used only in essential laboratory and analytical uses as defined by appendix G, and not to be resold or used in manufacturing.

(xvi) Written verifications from a U.S. purchaser that the controlled substance was exported to an Article 5 country in cases when Article 5 allowances were expended during production; and

(xvii) For class I, Group VI controlled substances, dated records of the quantity of controlled substances produced for quarantine and preshipment applications and quantity sold for quarantine and preshipment applications;

(xviii) Written certifications that quantities of class I, Group VI controlled substances produced solely for quarantine and preshipment applications were purchased by distributors or applicators to be used only for quarantine and preshipment applications in accordance with the definitions in this subpart; and

(xix) Written verifications from a U.S. purchaser that class I, Group VI

controlled substances produced solely for quarantine and preshipment applications, if exported, will be exported solely for quarantine and preshipment applications upon receipt of a certification in accordance with the definitions of this subpart and requirements in paragraph (h) of this section.

(xx) For class I, Group VI controlled substances, dated records such as invoices and order forms, and a log of the quantity of controlled substances produced for critical use, specifying quantities dedicated for pre-plant use and quantities dedicated for post-harvest use, and the quantity sold for critical use, specifying quantities dedicated for pre-plant use and quantities dedicated for post-harvest use;

(xxi) Written certifications that quantities of class I, Group VI controlled substances produced for critical use were purchased by distributors, applicators, or approved critical users to be used or sold only for critical use in accordance with the definitions and prohibitions in this subpart. Certifications must be maintained by the producer for a minimum of three years and;

(xxii) For class I, Group VI controlled substances, dated records such as invoices and order forms, and a log of the quantity of controlled substances produced solely for export to satisfy critical uses authorized by the Parties for that control period, and the quantity sold solely for export to satisfy critical uses authorized by the Parties for that control period.

(3) Reporting Requirements—Producers. For each quarter, except as specified below, each producer of a class I controlled substance must provide the Administrator with a report containing the following information:

(i) The production by company in that quarter of each controlled substance, specifying the quantity of any controlled substance used in processing, resulting in its transformation by the producer;

(ii) The amount of production for use in processes resulting in destruction of controlled substances by the producer;

(iii) The levels of production (expended allowances and credits) for each controlled substance;

(iv) The producer's total of expended and unexpended production allowances, consumption allowances, Article 5 allowances, critical use allowances (pre-plant), critical use allowances (post-harvest), critical stock allowances, and amount of essential-use allowances and destruction and transformation credits conferred at the end of that quarter;

(v) The amount of controlled substance sold or transferred during the quarter to a person other than the producer for use in processes resulting in its transformation or eventual destruction;

(vi) A list of the quantities and names of controlled substances exported, by the producer and or by other U.S. companies, to a Party to the Protocol that will be transformed or destroyed and therefore were not produced expending production or consumption allowances;

(vii) For transformation in the United States or by a person of another Party, one copy of an IRS certification of intent to transform the same controlled substance for a particular transformer and a list of additional quantities shipped to that same transformer for the quarter;

(viii) For destruction in the United States or by a person of another Party, one copy of a destruction verification (as under § 82.13(k)) for a particular destroyer, destroying the same controlled substance, and a list of additional quantities shipped to that same destroyer for the quarter;

(ix) A list of U.S. purchasers of controlled substances that exported to an Article 5 country in cases when Article 5 allowances were expended during production;

(x) A list of the essential-use allowance holders, distributors of laboratory supplies and laboratory customers from whom orders were placed and the quantity of specific essential-use controlled substances requested and produced;

(xi) The certifications from essential-use allowance holders stating that the controlled substances were purchased solely for specified essential uses and will not be resold or used in any other manufacturing process;

(xii) In the case of laboratory essential-uses, certifications from distributors of laboratory supplies that controlled substances were purchased for sale to laboratory customers who certify that the substances will only be used for essential laboratory and analytical uses as defined by appendix G of this subpart, and will not be resold or used in manufacturing; or, if sales are made directly to laboratories, certification from laboratories that the controlled substances will only be used for essential laboratory and analytical uses (defined at appendix G of this subpart) and will not be resold or used in manufacturing.

(xiii) The amount of class I, Group VI controlled substances sold or transferred during the quarter to a person other than the producer solely for quarantine and preshipment applications;

(xiv) A list of the quantities of class I, Group VI controlled substances produced by the producer and exported by the producer and/or by other U.S. companies, to a Party to the Protocol that will be used solely for quarantine and preshipment applications and therefore were not produced expending production or consumption allowances; and

(xv) For quarantine and preshipment applications of class I, Group VI controlled substances in the United States or by a person of another Party, one copy of a certification that the material will be used only for quarantine and preshipment applications in accordance with the definitions in this subpart from each recipient of the material and a list of additional quantities shipped to that same person for the quarter.

(xvi) For critical uses of class I, Group VI controlled substances, producers shall report annually the amount of critical use methyl bromide owned by the reporting entity, specifying quantities dedicated for pre-plant use and quantities dedicated for post-harvest use, as well as quantities held by the reporting entity on behalf of another entity, specifying quantities dedicated for pre-plant use and quantities dedicated for post-harvest use along with the name of the entity on whose behalf the material is held; and

(xvii) A list of the quantities of class I, Group VI controlled substances produced by the producer and exported by the producer and/or by other U.S. companies in that control period, solely to satisfy the critical uses authorized by the Parties for that control period; and

(xviii) On an annual basis, the amount of methyl bromide produced or imported prior to the January 1, 2005, phaseout date owned by the reporting entity, as well as quantities held by the reporting entity on behalf of another entity, specifying the name of the entity on whose behalf the material is held.

(4) For any person who fails to maintain the records required by this paragraph, or to submit the report required by this paragraph, the Administrator may assume that the person has produced at full capacity during the period for which records were not kept, for purposes of determining whether the person has violated the prohibitions at § 82.4.

(g) Importers of class I controlled substances during a control period must comply with record-keeping and reporting requirements specified in this paragraph (g).

(1) Recordkeeping—Importers. Any importer of a class I controlled substance (including used, recycled and reclaimed controlled substances) must maintain the following records:

(i) The quantity of each controlled substance imported, either alone or in mixtures, including the percentage of each mixture which consists of a controlled substance;

(ii) The quantity of those controlled substances imported that are used (including recycled or reclaimed) and, where applicable, the information provided with the petition as under paragraph (g)(2) of this section;

(iii) The quantity of controlled substances other than transhipments or used, recycled or reclaimed substances imported for use in processes resulting in their transformation or destruction and quantity sold for use in processes that result in their destruction or transformation;

(iv) The date on which the controlled substances were imported;

(v) The port of entry through which the controlled substances passed;

(vi) The country from which the imported controlled substances were imported;

(vii) The commodity code for the controlled substances shipped, which must be one of those listed in Appendix K to this subpart;

(viii) The importer number for the shipment;

(ix) A copy of the bill of lading for the import;

(x) The invoice for the import;

(xi) The quantity of imports of used, recycled or reclaimed class I controlled substances and class II controlled substances;

(xii) The U.S. Customs entry form;

(xiii) Dated records documenting the sale or transfer of controlled substances for use in processes resulting in transformation or destruction;

(xiv) Copies of IRS certifications that the controlled substance will be transformed or destruction verifications that it will be destroyed (as in § 82.13(k));

(xv) Dated records of the quantity of controlled substances imported for an essential-use or imported with destruction and transformation credits; and

(xvi) Copies of certifications that imported controlled substances are being purchased for essential laboratory and analytical uses (defined at appendix G of this subpart) or being purchased for eventual sale to laboratories that certify that controlled substances are for essential laboratory and analytical uses (defined at appendix G of this subpart).

(xvii) For class I, Group VI controlled substances, dated records of the quantity of controlled substances imported for quarantine and preshipment applications and quantity sold for quarantine and preshipment applications;

(xviii) Written certifications that quantities of class I, Group VI controlled substances imported solely for quarantine and preshipment applications were purchased by distributors or applicators to be used only for quarantine and preshipment applications in accordance with the definitions in this subpart; and

(xix) Written verifications from a U.S. purchaser that class I, Group VI controlled substances imported solely for quarantine and preshipment applications, if exported, will be exported solely for quarantine and preshipment applications upon receipt of a certification in accordance with the definitions of this Subpart and requirements in paragraph (h) of this section.

(xx) For class I, Group VI controlled substances, dated records such as invoices and order forms, of the quantity of controlled substances imported for critical use, specifying quantities dedicated for pre-plant use and quantities dedicated for post-harvest use, and the quantity sold for critical use, specifying quantities dedicated for pre-plant use and quantities dedicated for post-harvest use, and;

(xxi) Written certifications that quantities of class I, Group VI controlled substances imported for critical use were purchased by distributors, applicators, or approved critical users to be used or sold only for critical use in accordance with the definitions and prohibitions in this subpart. Certifications must be maintained by an importer for a minimum of three years.

(2) Petitioning—Importers of Used, Recycled or Reclaimed Controlled Substances. For each individual shipment over 5 pounds of a used controlled substance as defined in § 82.3, except for Group II used controlled substances shipped in aircraft halon bottles for hydrostatic testing, an importer must submit directly to the Administrator, at least 40 working days before the shipment is to leave the foreign port of export, the following information in a petition:

(i) Name and quantity in kilograms of the used controlled substance to be imported;

(ii) Name and address of the importer, the importer ID number, the contact person, and the phone and fax numbers;

(iii) Name, address, contact person, phone number and fax number of all previous source facilities from which the used controlled substance was recovered;

(iv) A detailed description of the previous use of the controlled substance at each source facility and a best estimate of when the specific controlled substance was put into the equipment at each source facility, and, when possible, documents indicating the date

the material was put into the equipment;

(v) A list of the name, make and model number of the equipment from which the material was recovered at each source facility;

(vi) Name, address, contact person, phone number and fax number of the exporter and of all persons to whom the material was transferred or sold after it was recovered from the source facility;

(vii) The U.S. port of entry for the import, the expected date of shipment and the vessel transporting the chemical. If at the time of submitting a petition the importer does not know the U.S. port of entry, the expected date of shipment and the vessel transporting the chemical, and the importer receives a non-objection notice for the individual shipment in the petition, the importer is required to notify the Administrator of this information prior to the actual U.S. Customs entry of the individual shipment;

(viii) A description of the intended use of the used controlled substance, and, when possible, the name, address, contact person, phone number and fax number of the ultimate purchaser in the United States;

(ix) Name, address, contact person, phone number and fax number of the U.S. reclamation facility, where applicable;

(x) If someone at the source facility recovered the controlled substance from the equipment, the name and phone and fax numbers of that person;

(xi) If the imported controlled substance was reclaimed in a foreign Party, the name, address, contact person, phone number and fax number of any or all foreign reclamation facility(ies) responsible for reclaiming the cited shipment;

(xii) An export license from the appropriate government agency in the country of export and, if recovered in another country, the export license from the appropriate government agency in that country;

(xiii) If the imported used controlled substance is intended to be sold as a refrigerant in the U.S., the name and address of the U.S. reclaimer who will bring the material to the standard required under section 608 (§82.152(g)) of the CAA, if not already reclaimed to those specifications; and

(xiv) A certification of accuracy of the information submitted in the petition.

(3) Starting on the first working day following receipt by the Administrator of a petition to import a used class I controlled substance, the Administrator will initiate a review of the information submitted under paragraph (g)(2) of this section and take action within 40 working days to issue either an objection-notice or a non-objection notice for the individual shipment to the person who submitted the petition to import the used class I controlled substance.

(i) For the following reasons, the Administrator may issue an objection notice to a petition:

(A) If the Administrator determines that the information is insufficient, that is, if the petition lacks or appears to lack any of the information required under §82.13(g)(2);

(B) If the Administrator determines that any portion of the petition contains false or misleading information, or the Administrator has information from other U.S. or foreign government agencies indicating that the petition contains false or misleading information;

(C) If the importer wishes to import a used class I controlled substance from a country which is, for that particular controlled substance, out of compliance regarding its phaseout obligations under the Protocol or the transaction in the petition is contrary to other provisions in the Vienna Convention or the Montreal Protocol;

(D) If the appropriate government agency in the exporting country has not agreed to issue an export license for the cited individual shipment of used controlled substance;

(E) If allowing the import of the used class I controlled substance would run counter to government restrictions from either the country of recovery or export regarding controlled ozone-depleting substances;

(F) If reclamation capacity is installed or is being installed for that specific controlled substance in the country of recovery or country of export and the capacity is funded in full

or in part through the Multilateral Fund.

(ii) Within ten (10) working days after receipt of the objection notice, the importer may re-petition the Administrator, only if the Administrator indicated ''insufficient information'' as the basis for the objection notice. If no appeal is taken by the tenth working day after the date on the objection notice, the objection shall become final. Only one appeal of re-petition will be accepted for any petition received by EPA.

(iii) Any information contained in the re-petition which is inconsistent with the original petition must be identified and a description of the reason for the inconsistency must accompany the re-petition.

(iv) In cases where the Administrator does not object to the petition based on the criteria listed in paragraph (g)(3)(i) of this section, the Administrator will issue a non-objection notice.

(v) To pass the approved used class I controlled substances through U.S. Customs, the petition and the non-objection notice issued by EPA must accompany the shipment through U.S. Customs.

(vi) If for some reason, following EPA's issuance of a non-objection notice, new information is brought to EPA's attention which shows that the non-objection notice was issued based on false information, then EPA has the right to:

(A) Revoke the non-objection notice;

(B) Pursue all means to ensure that the controlled substance is not imported into the United States; and

(C) Take appropriate enforcement actions.

(vii) Once the Administrator issues a non-objection notice, the person receiving the non-objection notice is required to import the individual shipment of used class I controlled substance within the same control period as the date stamped on the non-objection notice.

(viii) A person receiving a non-objection notice from the Administrator for a petition to import used class I controlled substances must maintain the following records:

(A) a copy of the petition;

(B) the EPA non-objection notice;

(C) the bill of lading for the import; and

(D) U.S. Customs entry documents for the import that must include one of the commodity codes from Appendix K to this subpart.

(4) Reporting Requirements—Importers. For each quarter, except as specified below, every importer of a class I controlled substance (including importers of used, recycled or reclaimed controlled substances) must submit to the Administrator a report containing the following information:

(i) Summaries of the records required in paragraphs (g)(1) (i) through (xvi) of this section for the previous quarter;

(ii) The total quantity imported in kilograms of each controlled substance for that quarter;

(iii) The quantity of those controlled substances imported that are used controlled substances.

(iv) The levels of import (expended consumption allowances before January 1, 1996) of controlled substances for that quarter and totaled by chemical for the control-period-to-date;

(vii) The importer's total sum of expended and unexpended consumption allowances by chemical as of the end of that quarter and the total sum of expended and unexpended critical use allowances (pre-plant) and unexpended critical use allowances (post-harvest) and critical stock allowances;

(viii) The amount of controlled substances imported for use in processes resulting in their transformation or destruction;

(ix) The amount of controlled substances sold or transferred during the quarter to each person for use in processes resulting in their transformation or eventual destruction;

(x) The amount of controlled substances sold or transferred during the quarter to each person for an essential use;

(xi) The amount of controlled substances imported with destruction and transformation credits;

(xii) Internal Revenue Service Certificates showing that the purchaser or recipient of imported controlled substances intends to transform those substances or destruction verifications (as in § 82.13(k)) showing that purchaser or

recipient intends to destroy the controlled substances; and

(xiii) The certifications from essential-use allowance holders stating that the controlled substances were purchased solely for specified essential-uses and will not be resold or used in manufacturing; and the certifications from distributors of laboratory supplies that the controlled substances were purchased solely for eventual sale to laboratories that certify the controlled substances are for essential laboratory and analytical uses (defined at appendix G of this subpart), or if sales are made directly to laboratories, certifications from laboratories that the controlled substances will only be used for essential laboratory and analytical uses (defined at appendix G of this subpart) and will not be resold or used in manufacturing.

(xiv) In the case of laboratory essential uses, a certification from distributors of laboratory supplies that controlled substances were purchased for sale to laboratory customers who certify that the substances will only be used for laboratory applications and will not be resold or used in manufacturing; and

(xv) The amount of class I, Group VI controlled substance sold or transferred during the quarter to a person other than the importer solely for quarantine and preshipment applications;

(xvi) A list of the quantities of class I, Group VI controlled substances exported by the importer and or by other U.S. companies, to a Party to the Protocol that will be used solely for quarantine and preshipment applications and therefore were not imported expending consumption allowances; and

(xvii) For quarantine and preshipment applications of class I, Group VI controlled substances in the United States or by a person of another Party, one copy of a certification that the material will be used only for quarantine and preshipment applications in accordance with the definitions in this subpart from each recipient of the material and a list of additional quantities shipped to that same person for the quarter.

(xviii) For critical uses of class I, Group VI controlled substances, importers shall report annually the amount of critical use methyl bromide owned by the reporting entity, specifying quantities dedicated for pre-plant use and quantities dedicated for post-harvest use, as well as quantities held by the reporting entity on behalf of another entity, specifying quantities dedicated for pre-plant use and quantities dedicated for post-harvest use along with the name of the entity on whose behalf the material is held.

(xix) Importers shall report annually the amount of methyl bromide produced or imported prior to the January 1, 2005, phaseout date owned by the reporting entity, as well as quantities held by the reporting entity on behalf of another entity, specifying the name of the entity on whose behalf the material is held.

(h) *Reporting Requirements—Exporters.* (1) For any exports of class I controlled substances (except Group VI) not reported under §82.10 of this subpart (additional consumption allowances), or under paragraph (f)(3) of this section (reporting for producers of controlled substances), the exporter who exported a class I controlled substance (except Group VI) must submit to the Administrator the following information within 45 days after the end of the control period in which the unreported exports left the United States:

(i) The names and addresses of the exporter and the recipient of the exports;

(ii) The exporter's Employee Identification Number;

(iii) The type and quantity of each controlled substance exported and what percentage, if any, of the controlled substance is used, recycled or reclaimed;

(iv) The date on which, and the port from which, the controlled substances were exported from the United States or its territories;

(v) The country to which the controlled substances were exported;

(vi) The amount exported to each Article 5 country;

(vii) The commodity code of the controlled substance shipped; and

(viii) The invoice or sales agreement containing language similar to the Internal Revenue Service Certificate that the purchaser or recipient of imported

controlled substances intends to transform those substances, or destruction verifications (as in paragraph (k) of this section) showing that the purchaser or recipient intends to destroy the controlled substances.

(2) For any exports of class I, Group VI controlled substances not reported under § 82.10 of this subpart (additional consumption allowances), or under paragraph (f)(3) of this section (reporting for producers of controlled substances), the exporter who exported a class I, Group VI controlled substance must submit to the Administrator the following information within 45 days after the end of each quarter in which the unreported exports left the United States:

(i) The names and addresses of the exporter and the recipient of the exports;

(ii) The exporter's Employee Identification Number;

(iii) The type and quantity of each controlled substance exported and what percentage, if any, of the controlled substance is used, recycled or reclaimed;

(iv) The date on which, and the port from which, the controlled substances were exported from the United States or its territories;

(v) The country to which the controlled substances were exported;

(vi) The amount exported to each Article 5 country;

(vii) The commodity code of the controlled substance shipped; and

(viii) The invoice or sales agreement containing language similar to the Internal Revenue Service Certificate that the purchaser or recipient of imported controlled substances intends to transform those substances, the destruction verifications (as in paragraph (k) of this section) showing that the purchaser or recipient intends to destroy the controlled substances, or the certification that the purchaser or recipient and the eventual applicator will only use the material for quarantine and preshipment applications in accordance with the definitions in this subpart.

(i) Every person who has requested additional production allowances under § 82.9(e) of this subpart or destruction and transformation credits under § 82.9(f) of this subpart or consumption allowances under § 82.10(b) of this subpart or who transforms or destroys class I controlled substances not produced or imported by that person must maintain the following:

(1) Dated records of the quantity and level of each controlled substance transformed or destroyed;

(2) Copies of the invoices or receipts documenting the sale or transfer of the controlled substance to the person;

(3) In the case where those controlled substances are transformed, dated records of the names, commercial use, and quantities of the resulting chemical(s);

(4) In the case where those controlled substances are transformed, dated records of shipments to purchasers of the resulting chemical(s);

(5) Dated records of all shipments of controlled substances received by the person, and the identity of the producer or importer of the controlled substances;

(6) Dated records of inventories of controlled substances at each plant on the first day of each quarter; and

(7) A copy of the person's IRS certification of intent to transform or the purchaser's or recipient's destruction verification of intent to destroy (as under § 82.13(k)), in the case where substances were purchased or transferred for transformation or destruction purposes.

(j) Persons who destroy class I controlled substances shall, following promulgation of this rule, provide EPA with a one-time report stating the destruction unit's destruction efficiency and the methods used to record the volume destroyed and those used to determine destruction efficiency and the name of other relevant federal or state regulations that may apply to the destruction process. Any changes to the unit's destruction efficiency or methods used to record volume destroyed and to determine destruction efficiency must be reflected in a revision to this report to be submitted to EPA within 60 days of the change.

(k) Persons who purchase or receive and subsequently destroy controlled class I substances that were originally produced without expending allowances shall provide the producer or importer

from whom they purchased or received the controlled substances with a verification that controlled substances will be used in processes that result in their destruction.

(1) The destruction verification shall include the following:

(i) Identity and address of the person intending to destroy controlled substances;

(ii) Indication of whether those controlled substances will be completely destroyed, as defined in §82.3 of this rule, or less than completely destroyed, in which case the destruction efficiency at which such substances will be destroyed must be included;

(iii) Period of time over which the person intends to destroy controlled substances; and

(iv) Signature of the verifying person.

(2) If, at any time, any aspects of this verification change, the person must submit a revised verification reflecting such changes to the producer from whom that person purchases controlled substances intended for destruction.

(l) Persons who purchase class I controlled substances and who subsequently transform such controlled substances shall provide the producer or importer with the IRS certification that the controlled substances are to be used in processes resulting in their transformation.

(m) Any person who transforms or destroys class I controlled substances who has submitted an IRS certificate of intent to transform or a destruction verification (as under paragraph (k) of this sectioin) to the producer or importer of the controlled substance, must report the names and quantities of class I controlled substances transformed and destroyed for each control period within 45 days of the end of such control period.

(n) Persons who import or export used controlled substances (including recycled or reclaimed) must label their bill of lading or invoice indicating that the controlled substance is used, recycled or reclaimed.

(o) Persons who import heels of controlled substances must label their bill of lading or invoice indicating that the controlled substance in the container is a heel.

(p) Every person who brings back a container with a heel to the United States, as defined in §82.3, must report quarterly the amount brought into the United States certifying that the residual amount in each shipment is less than 10 percent of the volume of the container and will either:

(1) Remain in the container and be included in a future shipment;

(2) Be recovered and transformed;

(3) Be recovered and destroyed; or

(4) Be recovered for a non-emissive use.

(q) Every person who brings a container with a heel into the United States must report on the final disposition of each shipment within 45 days of the end of the control period.

(r) Every person who transships a controlled substance must maintain records that indicate that the controlled substance shipment originated in a foreign country destined for another foreign country, and does not enter interstate commerce with the United States.

(s) Any person allocated essential-use allowances who submits an order to a producer or importer for a controlled substance must report the quarterly quantity received from each producer or importer.

(t) Any distributor of laboratory supplies receiving controlled substances under the global laboratory essential-use exemption for sale to laboratory customers must report quarterly the quantity received of each controlled substance from each producer or importer.

(u) Holders of Essential-Use Allowances—Reporting.

(1) Within 30 days of the end of every quarter, any person allocated essential-use allowances must submit to the Administrator a report containing the quantity of each controlled substance, in kilograms, purchased and received from each producer and each importer during that quarter as well as from which country the controlled substance was imported.

(2) Any person allocated essential-use allowances must submit to the Administrator a report containing the following information within 30 days of the end of the control period, and, if

possible, within 20 days of the end of the control period:

(i) The gross quantity of each controlled substance, in kilograms, that was used for the essential use during the control period; and

(ii) The quantity of each controlled substance, in kilograms, contained in exported products during the control period; and

(iii) The quantity of each controlled substance, in kilograms, that was destroyed or recycled during the control period; and

(iv) The quantity of each controlled substance, in kilograms, held in inventory as of the last day of the control period, that was acquired with essential use allowances in all control periods (*i.e.* quantity on hand at the end of the year); and

(v) The quantity of each controlled substance, in kilograms, in a stockpile that is owned by the company or is being held on behalf of the company under contract, and was produced or imported through the use of production allowances and consumption allowances prior to the phaseout (*i.e.* class I ODSs produced before their phaseout dates); and

(vi) For essential use allowances for metered-dose inhalers only, the allowance holder must report the total number of marketable units of each specific metered-dose inhaler product manufactured in the control period.

(v) Any distributor of laboratory supplies who purchased controlled substances under the global essential laboratory and analytical use exemption must submit quarterly (except distributors following procedures in paragraph (x) of this section) the quantity of each controlled substance purchased by each laboratory customer whose certification was previously provided to the distributor pursuant to paragraph (w) of this section.

(w) A laboratory customer purchasing a controlled substance under the global essential laboratory and analytical use exemption must provide the producer, importer or distributor with a one-time-per-year certification for each controlled substance that the substance will only be used for essential laboratory and analytical uses (defined at appendix G of this subpart) and not be resold or used in manufacturing.

(1) The identity and address of the laboratory customer;

(2) The name and phone number of a contact person for the laboratory customer;

(3) The name and quantity of each controlled substance purchased, and the estimated percent of the controlled substance that will be used for each listed type of laboratory application.

(x) Any distributor of laboratory supplies who purchased class I controlled substances under the global essential laboratory and analytical use exemption, and who only sells the class I controlled substances as reference standards for calibrating laboratory analytical equipment, may write a letter to the Administrator requesting permission to submit the reports required under paragraph (v) of this section annually rather than quarterly. The Administrator will review the request and issue a notification of permission to file annual reports if, in the Administrator's judgment, the distributor meets the requirements of this paragraph. Upon receipt of a notification of extension from the Administrator, the distributor must submit annually the quantity of each controlled substance purchased by each laboratory customer whose certification was previously provided to the distributor pursuant to paragraph (w) of this section.

(y) Every distributor of methyl bromide (class I, Group VI controlled substances) who purchases or receives a quantity produced or imported solely for quarantine or preshipment applications under the exemptions in this subpart must comply with recordkeeping and reporting requirements specified in this paragraph (aa) of this section.

(1) Every distributor of methyl bromide must certify to the producer or importer that quantities received that were produced or imported solely for quarantine and preshipment applications under the exemptions in this subpart will be used only for quarantine applications or preshipment applications in accordance with the definitions in this subpart.

(2) Every distributor of a quantity of methyl bromide that was produced or imported solely for quarantine or

preshipment applications under the exemptions in this subpart must receive from an applicator a certification of the quantity of class I, Group VI controlled substances ordered, prior to delivery of the quantity, stating that the quantity will be used solely for quarantine or preshipment applications in accordance with definitions in this subpart.

(3) Every distributor of methyl bromide who receives a certification from an applicator that the quantity ordered and delivered will be used solely for quarantine and preshipment applications in accordance with definitions in this subpart must maintain the certifications as records for 3 years.

(4) Every distributor of methyl bromide who receives a certification from an applicator that the quantity ordered and delivered will be used solely for quarantine and preshipment applications in accordance with definitions in this subpart must report to the Administrator within 45 days after the end of each quarter, the total quantity delivered for which certifications were received that stated the class I, Group VI controlled substance would be used solely for quarantine and preshipment applications in accordance with definitions in this Subpart.

(z) Every applicator of class I, Group VI controlled substances who purchases or receives a quantity produced or imported solely for quarantine and preshipment applications under the exemptions in this subpart must comply with recordkeeping and reporting requirements specified in this paragraph (bb) of this section.

(1) Recordkeeping—Applicators. Every applicator of class I, Group VI controlled substances produced or imported solely for quarantine and preshipment applications under the exemptions of this subpart must maintain, for every application, a document from the commodity owner, shipper or their agent requesting the use of class I, Group VI controlled substances citing the regulatory requirement that justifies its use in accordance with definitions in this subpart. These documents shall be retained for 3 years.

(2) Reporting—Applicators. Every applicator of class I, Group VI controlled substances who purchases or receives a quantity of class I, Group VI controlled substance that was produced or imported solely for quarantine and preshipment applications under the exemptions in this subpart shall provide the distributor of the methyl bromide, prior to shipment of the class I, Group VI controlled substance, with a certification that the quantity of controlled substances will be used only for quarantine and preshipment applications as defined in this subpart.

(aa) Every commodity owner, shipper or their agent requesting an applicator to use a quantity of class I, Group VI controlled substance that was produced or imported solely for quarantine and preshipment applications under the exemptions of this subpart must maintain a record for 3 years, for each request, certifying knowledge of the requirements associated with the exemption for quarantine and preshipment applications in this subpart and citing the regulatory requirement that justifies the use of the class I, Group VI controlled substance in accordance with definitions in this subpart. The record must include the following statement: ''I certify knowledge of the requirements associated with the exempted quarantine and preshipment applications published in 40 CFR part 82, including the requirement that this letter cite the treatments or official controls for quarantine applications or the official requirements for preshipment requirements.''

(bb) Every distributor of methyl bromide (class I, Group VI controlled substances) who purchases or receives a quantity of critical use methyl bromide must comply with recordkeeping and reporting requirements specified in this paragraph (bb).

(1) Recordkeeping—Every distributor of critical use methyl bromide must certify to the producer or importer or other entity from which they are acquiring quantities of critical use methyl bromide that such quantities received will be sold or used only for approved critical use(s) in accordance with the definitions and prohibitions in this subpart.

(i) Every distributor of a quantity of critical use methyl bromide must receive from an applicator, or any other entity to whom they sell critical use

methyl bromide, a certification of the quantity of critical use methyl bromide ordered, prior to delivery of the quantity, stating that the quantity will be sold or used only for approved critical uses in accordance with definitions and prohibitions in this subpart.

(ii) Every distributor of methyl bromide who receives a certification from an applicator or any other entity to which they sell critical use methyl bromide must maintain the certifications as records for 3 years.

(iii) Every distributor of a quantity of critical use methyl bromide must maintain invoice and order records related to the sale of such material for 3 years.

(2) Reporting—Every distributor of critical use methyl bromide must report to the Administrator annually, the following items:

(i) For critical uses of class I, Group VI controlled substances, an annual list of the amount of critical use methyl bromide bought;

(ii) For critical uses of class I, Group VI controlled substances, an annual list of the amount of critical use methyl bromide sold for each specified critical use in Appendix L of this subpart;

(iii) For critical uses of class I, Group VI controlled substances, report the amount of critical use methyl bromide owned by the reporting entity, specifying quantities dedicated for pre-plant use and quantities dedicated for post-harvest use, as well as quantities held by the reporting entity on behalf of another entity, specifying quantities dedicated for pre-plant use and quantities dedicated for post-harvest use, along with the name of the entity on whose behalf the material is held;

(iv) The number of unexpended and expended critical stock allowances;

(v) The amount of methyl bromide produced or imported prior to the January 1, 2005, phaseout date owned by the reporting entity, as well as quantities held by the reporting entity on behalf of another entity, specifying the name of the entity on whose behalf the material is held.

(cc) Every third party applicator of methyl bromide (class I, Group VI controlled substances) that purchases or receives critical use methyl bromide must comply with recordkeeping and reporting requirements specified in this paragraph (cc).

(1) Recordkeeping—Every third party applicator of critical use methyl bromide must certify to the producer or importer or other entity from which they are acquiring quantities of critical use methyl bromide that such quantities received will be sold or used only for approved critical use(s) in accordance with the definitions and prohibitions in this subpart.

(i) Every third party applicator of a quantity of critical use methyl bromide must receive from any entity to whom they sell critical use methyl bromide, a certification of the quantity of critical use methyl bromide ordered, prior to delivery of the quantity, stating that the quantity will be sold or used only for approved critical uses in accordance with definitions and prohibitions in this subpart.

(ii) Every third party applicator of methyl bromide who receives a certification from an entity to which they sell critical use methyl bromide must maintain the certifications as records for 3 years.

(iii) Every third party applicator of a quantity of critical use methyl bromide must maintain invoice and order records related to the sale of such material for 3 years.

(2) Reporting—Every third party applicator of critical use methyl bromide must report to the Administrator annually, the following items:

(i) For critical uses of class I, Group VI controlled substances, an annual list of the amount of critical use methyl bromide bought;

(ii) For critical uses of class I, Group VI controlled substances, an annual list of the amount of critical use methyl bromide sold for each specified critical use in Appendix L of this subpart;

(iii) For critical uses of class I, Group VI controlled substances, report annually the amount of critical use methyl bromide owned by the reporting entity, specifying quantities dedicated for pre-plant use and quantities dedicated for post-harvest use, as well as quantities held by the reporting entity on behalf of another entity, specifying quantities dedicated for pre-plant use and quantities dedicated for post-harvest use,

along with the name of the entity on whose behalf the material is held;

(iv) The number of unexpended and expended critical stock allowances;

(v) The amount of methyl bromide produced or imported prior to the January 1, 2005 phaseout date owned by the reporting entity, as well as quantities held by the reporting entity on behalf of another entity, specifying the name of the entity on whose behalf the material is held.

(dd) Every approved critical user purchasing an amount of critical use methyl bromide or purchasing fumigation services with critical use methyl bromide must, for each request, identify the use as a critical use and certify being an approved critical user. The approved critical user certification will state, in part: ''I certify, under penalty of law, I am an approved critical user and I will use this quantity of methyl bromide for an approved critical use. My action conforms to the requirements associated with the critical use exemption published in 40 CFR part 82. I am aware that any agricultural commodity within a treatment chamber, facility or field I fumigate with critical use methyl bromide cannot subsequently or concurrently be fumigated with non-critical use methyl bromide during the same control period, excepting a QPS treatment or a treatment for a different use (*e.g.*, a different crop or commodity). I will not use this quantity of methyl bromide for a treatment chamber, facility, or field that I previously fumigated with non-critical use methyl bromide during the same control period, excepting a QPS treatment or a treatment for a different use (*e.g.*, a different crop or commodity), unless a local township limit now prevents me from using methyl bromide alternatives or I have now become an approved critical user as a result of rulemaking.'' The certification will also identify the type of critical use methyl bromide purchased, the location of the treatment, the crop or commodity treated, the quantity of critical use methyl bromide purchased, and the acreage/square footage treated, and will be signed and dated by the approved critical user.

[60 FR 24986, May 10, 1995]

EDITORIAL NOTE: For FEDERAL REGISTER citations affecting § 82.13 see the List of CFR Sections Affected which appears in the Finding Aids section of the printed volume and at www.fdsys.gov.

### § 82.15 Prohibitions for class II controlled substances.

(a) *Production.* (1) Effective January 21, 2003, no person may produce class II controlled substances for which EPA has apportioned baseline production and consumption allowances, in excess of the quantity of unexpended production allowances, unexpended Article 5 allowances, unexpended export production allowances, or conferred unexpended HCFC–141b exemption allowances held by that person for that substance under the authority of this subpart at that time in that control period, unless the substances are transformed or destroyed domestically or by a person of another Party, or unless they are produced using an exemption granted in paragraph (f) of this section. Every kilogram of excess production constitutes a separate violation of this subpart.

(2) Effective January 21, 2003, no person may use production allowances to produce a quantity of class II controlled substance unless that person holds under the authority of this subpart at the same time consumption allowances sufficient to cover that quantity of class II controlled substances. No person may use consumption allowances to produce a quantity of class II controlled substances unless the person holds under authority of this subpart at the same time production allowances sufficient to cover that quantity of class II controlled substances.

(b) *Import.* (1) Effective January 21, 2003, no person may import class II controlled substances (other than transhipments, heels or used class II controlled substances) for which EPA has apportioned baseline production and consumption allowances , in excess of the quantity of unexpended consumption allowances, or conferred unexpended HCFC–141b exemption allowances held by that person under the authority of this subpart at that time in that control period, unless the substances are for use in a process resulting in their transformation or their destruction, or unless they are produced

using an exemption granted in paragraph (f) of this section. Every kilogram of excess import constitutes a separate violation of this subpart.

(2) Effective January 21, 2003, no person may import, at any time in any control period, a used class II controlled substance for which EPA has apportioned baseline production and consumption allowances, without having submitted a petition to the Administrator and received a non-objection notice in accordance with § 82.24(c)(3) and (4). A person issued a non-objection notice for the import of an individual shipment of used class II controlled substances may not transfer or confer the right to import, and may not import any more than the exact quantity (in kilograms) of the used class II controlled substance stated in the non-objection notice. Every kilogram of import of used class II controlled substance in excess of the quantity stated in the non-objection notice issued by the Administrator in accordance with § 82.24(c)(3) and (4) constitutes a separate violation of this subpart.

(c) *Production with Article 5 allowances.* No person may introduce into U.S. interstate commerce any class II controlled substance produced with Article 5 allowances, except for export to an Article 5 Party as listed in Annex 4 of Appendix C of this subpart. Every kilogram of a class II controlled substance produced with Article 5 allowances that is introduced into interstate commerce other than for export to an Article 5 Party constitutes a separate violation under this subpart. No person may export any class II controlled substance produced with Article 5 allowances to a non-Article 5 Party. Every kilogram of a class II controlled substance that was produced with Article 5 allowances that is exported to a non-Article 5 Party constitutes a separate violation under this subpart.

(d) Production with export production allowances. No person may introduce into U.S. interstate commerce any class II controlled substance produced with export production allowances. Every kilogram of a class II controlled substance that was produced with export production allowances that is introduced into U.S. interstate commerce constitutes a separate violation under this subpart.

(e) Trade with Parties. No person may import or export any quantity of a class II controlled substance listed in Appendix A to this subpart, from or to any foreign state that is not either:

(1) A Party to the Montreal Protocol that has ratified the Beijing Amendments. Parties that have ratified the Beijing Amendments as of June 17, 2004 are listed in annex 1 to Appendix C of this subpart. Or,

(2) A Party to the Montreal Protocol that has provided notice, certification, and data in accordance with Decision XV/3(c)(i), (ii), and (iii) respectively, to the Ozone Secretariat. A list of Parties that have provided notice, certification and data in accordance with Decision XV/3(c)(i), (ii), and (iii) respectively, by June 17, 2004 can be found in annex 3 to Appendix C of this subpart and on a list maintained by the Ozone Secretariat. Or,

(3) A Party to the Montreal Protocol operating under Article 5(1) to the Montreal Protocol. A list of Parties operating under Article 5(1) to the Montreal Protocol as of June 17, 2004 can be found in annex 4 to Appendix C of this subpart.

(f) Exemptions. (1) Medical Devices [Reserved]

(g) *Introduction into interstate commerce or use.* (1) Effective January 1, 2010, no person may introduce into interstate commerce or use HCFC–141b (unless used, recovered, and recycled) for any purpose except for use in a process resulting in its transformation or its destruction; for export to Article 5 Parties under § 82.18(a); for HCFC–141b exemption needs; as a transhipment or heel; or for exemptions permitted in paragraph (f) of this section.

(2)(i) Effective January 1, 2010, no person may introduce into interstate commerce or use HCFC–22 or HCFC–142b (unless used, recovered, and recycled) for any purpose other than for use in a process resulting in its transformation or its destruction; for use as a refrigerant in equipment manufactured before January 1, 2010; for export to Article 5 Parties under § 82.18(a); as a transhipment or heel; or for exemptions permitted in paragraph (f) of this section.

(ii) Introduction into interstate commerce and use of HCFC–22 is not subject to the prohibitions in paragraph (g)(2)(i) of this section if the HCFC–22 is for use in medical equipment prior to January 1, 2015; for use in thermostatic expansion valves prior to January 1, 2015; or for use as a refrigerant in appliances manufactured before January 1, 2012, provided that the components are manufactured prior to January 1, 2010, and are specified in a building permit or a contract dated before January 1, 2010, for use on a particular project.

(3) Effective January 1, 2015, no person may introduce into interstate commerce or use HCFC–141b (unless used, recovered, and recycled) for any purpose other than for use in a process resulting in its transformation or its destruction; for export to Article 5 Parties under § 82.18(a), as a transhipment or heel; or for exemptions permitted in paragraph (f) of this section.

(4) Effective January 1, 2015, no person may introduce into interstate commerce or use any class II controlled substance not governed by paragraphs (g)(1) through (3) of this section (unless used, recovered, and recycled) for any purpose other than for use in a process resulting in its transformation or its destruction; for use as a refrigerant in equipment manufactured before January 1, 2020; for export to Article 5 Parties under § 82.18(a); as a transhipment or heel; or for exemptions permitted in paragraph (f) of this section.

(5) Effective January 1, 2030, no person may introduce into interstate commerce or use any class II controlled substance (unless used, recovered, and recycled) for any purpose other than for use in a process resulting in its transformation or its destruction; for export to Article 5 Parties under § 82.18(a); as a transhipment or heel; or for exemptions permitted in paragraph (f) of this section.

(6) Effective January 1, 2040, no person may introduce into interstate commerce or use any class II controlled substance (unless used, recovered, and recycled) for any purpose other than for use in a process resulting in its transformation or its destruction, as a transhipment or heel, or for exemptions permitted in paragraph (f) of this section.

[68 FR 2848, Jan. 21, 2003, as amended at 69 FR 34031, June 17, 2004; 71 FR 41171, July 20, 2006; 74 FR 66445, Dec. 15, 2009]

### § 82.16 Phaseout schedule of class II controlled substances.

(a) In each control period as indicated in the following table, each person is granted the specified percentage of baseline production allowances and baseline consumption allowances for the specified class II controlled substances apportioned under §§ 82.17 and 82.19:

| Control period | Percent of HCFC–141b | Percent of HCFC–22 | Percent of HCFC–142b | Percent of HCFC–123 | Percent of HCFC–124 | Percent of HCFC–225ca | Percent of HCFC–225cb |
|---|---|---|---|---|---|---|---|
| 2003 | 0 | 100 | 100 | ..... | ..... | ..... | |
| 2004 | 0 | 100 | 100 | ..... | ..... | ..... | |
| 2005 | 0 | 100 | 100 | ..... | ..... | ..... | |
| 2006 | 0 | 100 | 100 | ..... | ..... | ..... | |
| 2007 | 0 | 100 | 100 | ..... | ..... | ..... | |
| 2008 | 0 | 100 | 100 | ..... | ..... | ..... | |
| 2009 | 0 | 100 | 100 | ..... | ..... | ..... | |
| 2010 | 0 | 41.9 | 0.47 | 125 | 125 | 125 | 125 |
| 2011 | 0 | 38.0 | 0.47 | 125 | 125 | 125 | 125 |
| 2012 | 0 | 34.1 | 0.47 | 125 | 125 | 125 | 125 |
| 2013 | 0 | 30.1 | 0.47 | 125 | 125 | 125 | 125 |
| 2014 | 0 | 26.1 | 0.47 | 125 | 125 | 125 | 125 |

(b) Effective January 1, 2003, no person may produce HCFC-141b except for use in a process resulting in its transformation or its destruction, for export under § 82.18(a) using unexpended Article 5 allowances, for export under § 82.18(b) using unexpended export production allowances, for HCFC-141b exemption needs using unexpended HCFC-141b exemption allowances, or for exemptions permitted in § 82.15(f). Effective January 1, 2003, no person

may import HCFC-141b (other than transhipments, heels or used class II controlled substances) in excess of the quantity of unexpended HCFC-141b exemption allowances held by that person except for use in a process resulting in its transformation or its destruction, or for exemptions permitted in § 82.15(f).

(c) Effective January 1, 2010, no person may produce HCFC-22 or HCFC-142b for any purpose other than for use in a process resulting in their transformation or their destruction, for use in equipment manufactured before January 1, 2010, for export under § 82.18(a) using unexpended Article 5 allowances, or for export under § 82.18(b) using unexpended export production allowances, or for exemptions permitted in § 82.15(f). Effective January 1, 2010, no person may import HCFC-22 or HCFC-142b (other than transhipments, heels or used class II controlled substances) for any purpose other than for use in a process resulting in their transformation or their destruction, for exemptions permitted in § 82.15(f), or for use in equipment manufactured prior to January 1, 2010.

(d) Effective January 1, 2015, no person may produce class II controlled substances not previously controlled, for any purpose other than for use in a process resulting in their transformation or their destruction, for use as a refrigerant in equipment manufactured before January 1, 2020, for export under § 82.18(a) using unexpended Article 5 allowances, or for export under § 82.18(b) using unexpended export production allowances, or for exemptions permitted in § 82.15(f). Effective January 1, 2015, no person may import class II controlled substances not subject to the requirements of paragraph (b) or (c) of this section (other than transhipments, heels or used class II controlled substances) for any purpose other than for use in a process resulting in their transformation or their destruction, for exemptions permitted in § 82.15(f), or for use as a refrigerant in equipment manufactured prior to January 1, 2020.

(e) Effective January 1, 2020, no person may produce HCFC-22 or HCFC-142b for any purpose other than for use in a process resulting in their transformation or their destruction, for export under § 82.18(a) using unexpended Article 5 allowances, or for export under § 82.18(b) using unexpended export production allowances, or for exemptions permitted in § 82.15(f). Effective January 1, 2020, no person may import HCFC-22 or HCFC-142b for any purpose other than for use in a process resulting in their transformation or their destruction, or for exemptions permitted in § 82.15(f).

(f) Effective January 1, 2030, no person may produce class II controlled substances, for any purpose other than for use in a process resulting in their transformation or their destruction, for export under § 82.18(a) using unexpended Article 5 allowances, or for exemptions permitted in § 82.15(f). Effective January 1, 2030, no person may import class II controlled substances for any purpose other than for use in a process resulting in their transformation or their destruction, or for exemptions permitted in § 82.15(f).

(g) Effective January 1, 2040, no person may produce class II controlled substances for any purpose other than for use in a process resulting in their transformation or their destruction, or for exemptions permitted in § 82.15(f).

(h) Petition for HCFC-141b exemption allowances.

(1) Effective January 21, 2003, a formulator of HCFC–141b, an agency, department, or instrumentality of the U.S., or a non-governmental space vehicle entity, may petition EPA for HCFC–141b exemption allowances for the production or import of HCFC–141b after the phaseout date, in accordance with this section. Except as provided in paragraphs (h)(4) and (7) of this section, a petitioner must submit the following information to the Director of EPA's Office of Atmospheric Programs no later than April 21, 2003, for the 2003 control period; and, for any subsequent control period, no later than October 31st of the year preceding the control period for which the HCFC–141b exemption allowances are requested:

(i) Name and address of the HCFC-141b formulator, U.S. government entity or non-governmental space vehicle entity;

(ii) Name of contact person, phone number, fax number and e-mail address;

(iii) Quantity (in kilograms) of HCFC-141b needed for each relevant calendar year, supported by documentation about past use for at least the previous three years;

(iv) Quantities of HCFC-141b, if any, contained in systems that were sold to other systems houses for at least the previous three years;

(v) Description of the markets and applications served by the use of HCFC-141b or systems based on HCFC-141b;

(vi) Technical description of processes in which HCFC-141b is being used;

(vii) Technical description of the specific conditions under which the product will be applied;

(viii) Technical description of why alternatives and substitutes are not sufficient to eliminate the use of HCFC-141b;

(ix) Amount of stockpiled HCFC-141b (on-hand, taken title to, or available from a supplier) along with a detailed analysis showing why stockpiled, recovered or recycled quantities are deemed to be unavailable, or technically or commercially infeasible for use (for example, taking into consideration undue costs for storage and transportation);

(x) An estimate of the number of control periods over which such an exemption would be necessary;

(xi) A detailed description of continuing investigations into and progress on possible alternatives and substitutes;

(xii) A list of alternatives considered, purchased or sampled, including dates and copies of receipts for verification;

(xiii) A summary of the petitioner's in-house development program including summaries of all relevant test results and their significance to subsequent decision-making and technology selection. Full supporting test data must be available on request including alternative tested and date on which it was tested;

(xiv) A clear statement of the preferred technical option(s) being pursued at the time of the petition and the reasoning for this selection;

(xv) A summary of product test results conducted on the preferred technical option(s) by accredited organizations in order to determine whether products meet applicable codes. Relevant test reports and certifications must be made available on request; and

(xvi) A description of the further development testing to be carried out over the number of control periods identified under paragraph (h)(1)(x) of this section.

(2) Within 21 business days of receipt of the petition, the Director of EPA's Office of Atmospheric Programs will issue to a HCFC-141b formulator, agency, department, or instrumentality of the U.S., or non-governmental space vehicle entity that has petitioned for HCFC-141b exemption allowances, based on information received in accordance with paragraph (h)(1) of this section, a notice indicating one of the following:

(i) A determination by the Director of EPA's Office of Atmospheric Programs to grant a specific quantity of HCFC-141b exemption allowances (in kilograms) for the production or import of HCFC-141b in a specified control period based on an assessment that HCFC-141b is necessary to maintain either safety, or operational or technical viability;

(ii) A determination by the Director of EPA's Office of Atmospheric Programs to request additional information because the information received in accordance with paragraph (h)(1) of this section is not sufficient to decide whether to grant or deny HCFC-141b exemption allowances. The Director of EPA's Office of Atmospheric Programs will decide whether to grant or deny HCFC-141b exemption allowances within 30 days of receipt of the additional information. However, if the petitioner fails to submit the additional information within 20 days of the request, such failure constitutes a basis for denying the petition for HCFC-141b exemption allowances.

(iii) A determination by the Director of EPA's Office of Atmospheric Programs to deny a grant of HCFC-141b exemption allowances due to one or more of the following reasons:

(A) The needs can be met by the use of a substance other than HCFC-141b;

(B) The needs can be met by the use of existing supplies of HCFC-141b;

(C) There is evidence of fraud or misrepresentation;

(D) Approval of the HCFC-141b exemption allowances would be inconsistent with U.S. obligations under the provisions of the Montreal Protocol (including Decisions agreed by the Parties);

(E) Approval of the HCFC-141b exemption allowances would be inconsistent with the Clean Air Act;

(F) There is an inadequate demonstration of efforts undertaken to research and implement alternatives; or

(G) Granting the HCFC-141b exemption allowances may reasonably be expected to endanger human health or the environment.

(3) Within ten working days after receipt of a notice outlining a determination by the Director of EPA's Office of Atmospheric Programs to deny a grant of HCFC-141b exemption allowances due to one or more of the reasons in paragraph (h)(2)(iii) of this section, the petitioner may file with the Director of EPA's Office of Atmospheric Programs a one-time appeal with elaborated information. The Director of EPA's Office of Atmospheric Programs may affirm the determination to deny a grant of HCFC-141b exemption allowances or make a determination to grant HCFC-141b exemption allowance, in light of the available evidence submitted with the appeal. If no appeal is submitted by the tenth day after receipt of the notice outlining a determination by the Director of EPA's Office of Atmospheric Programs to deny a grant of HCFC-141b exemption allowances, the denial will be final on that day.

(4) Any entity that has previously petitioned for HCFC-141b exemption allowances under paragraph (h)(1) of this section may file a petition for renewal for a subsequent control period by October 31st of the year preceding that control period. The petition for renewal must contain the following information:

(i) Name and address of the HCFC-141b formulator, U.S. government entity or non-governmental space vehicle entity;

(ii) Name of contact person, phone number, fax number and e-mail address;

(iii) Quantity (in kilograms) of HCFC-141b needed for the control period;

(iv) Description of markets and applications being served by the use of HCFC-141b;

(v) A technical description of the process in which HCFC-141b is still being used;

(vi) A technical description of the specific conditions under which the product is still being applied;

(vii) Technical description of why alternatives and substitutes are still not sufficient to eliminate the use of HCFC-141b;

(viii) Amount of stockpiled HCFC-141b (on-hand, taken title to, or available from a supplier) along with a detailed analysis showing why stockpiled, recovered or recycled quantities are deemed to be technically or economically infeasible for use; and

(ix) A detailed description of continuing investigations into and progress on possible alternatives and substitutes and how this activity differs from information given in the previous request.

(5) A person granted HCFC-141b exemption allowances by the Director of EPA's Office of Atmospheric Programs under paragraph (h)(2)(i) or (h)(3) of this section may request a quantity of HCFC-141b be produced or imported in the specified control period listed in the notice by conferring the rights to produce or import to a producer or importer.

(6) The HCFC-141b exemption allowances held by one entity do not automatically transfer to an acquiring entity. Any entity acquiring another company holding HCFC-141b exemption allowances must submit a renewal application in accordance with paragraph (h)(4) of this section at the time of the acquisition in order to qualify for the HCFC-141b exemption allowances.

(7) A formulator for, or an agency, department, or instrumentality of the U.S., or a non-governmental space vehicle entity that has previously petitioned for and been granted HCFC–141b exemption allowances under paragraphs (h)(1) through (4) of this section

is granted, on January 1 of each control period beginning January 1, 2007, HCFC–141b exemption allowances equivalent to 10% more than the highest amount previously granted under paragraphs (h)(1) through (4) of this section to that petitioner for space vehicle uses or defense applications.

(8) A formulator for, or an agency, department, or instrumentality of the U.S.; or a non-governmental space vehicle entity that has previously petitioned for and been granted HCFC–141b exemption allowances under paragraphs (h)(1) through (4) of this section but now seeks to obtain allowances in addition to those granted under paragraph (h)(7) of this section must submit a new petition in accordance with paragraph (h)(1) of this section.

[68 FR 2848, Jan. 21, 2003, as amended at 71 FR 41171, July 20, 2006; 74 FR 66446, Dec. 15, 2009]

### § 82.17 Apportionment of baseline production allowances for class II controlled substances.

Effective January 1, 2010, the following persons are apportioned baseline production allowances for HCFC–22, HCFC–141b, HCFC–142b, HCFC–123, HCFC–124, HCFC–225ca, and HCFC–225cb, as set forth in the following table:

| Person | Controlled substance | Allowances (kg) |
|---|---|---|
| AGC Chemicals Americas. | HCFC–225ca | 266,608 |
| | HCFC–225cb | 373,952 |
| Arkema | HCFC–22 | 28,219,223 |
| | HCFC–141b | 24,647,925 |
| | HCFC–142b | 16,131,096 |
| DuPont | HCFC–22 | 42,638,049 |
| | HCFC–124 | 2,269,210 |
| Honeywell | HCFC–22 | 37,378,252 |
| | HCFC–141b | 28,705,200 |
| | HCFC–142b | 2,417,534 |
| | HCFC–124 | 1,759,681 |
| MDA Manufacturing | HCFC–22 | 2,383,835 |
| Solvay Solexis | HCFC–142b | 6,541,764 |

[ 74 FR 66446, Dec. 15, 2009]

### § 82.18 Availability of production in addition to baseline production allowances for class II controlled substances.

(a) *Article 5 allowances.* (1) Effective January 1, 2003, a person apportioned baseline production allowances for HCFC–141b, HCFC–22, or HCFC–142b under § 82.17 is also apportioned Article 5 allowances, equal to 15 percent of their baseline production allowances, for the specified HCFC for each control period up until December 31, 2009, to be used for the production of the specified HCFC for export only to foreign states listed in Annex 4 of Appendix C to this subpart.

(2) Effective January 1, 2010, a person apportioned baseline production allowances under § 82.17 for HCFC–141b, HCFC–22, or HCFC–142b is also apportioned Article 5 allowances, equal to 10 percent of their baseline production allowances, for the specified HCFC for each control period up until December 31, 2019, to be used for the production of the specified HCFC for export only to foreign states listed in Annex 4 of Appendix C to this subpart.

(3) Effective January 1, 2015, a person apportioned baseline production allowances under § 82.17 for HCFC–123, HCFC–124, HCFC–225ca, and HCFC–225cb is also apportioned Article 5 allowances, equal to 10 percent of their baseline production allowances, for the specified HCFC for each control period up until December 31, 2019, to be used for the production of the specified HCFC for export only to foreign states listed in Annex 4 of Appendix C to this subpart.

(b) *Export Production Allowances.* (1) Effective January 1, 2003, a person apportioned baseline production allowances for HCFC–141b under § 82.17 is also apportioned export production allowances, equal to 100 percent of their baseline production allowances, for HCFC–141b for each control period up until December 31, 2009, to be used for the production of HCFC–141b for export only, in accordance with this section.

(2) [Reserved]

(c) *International trades of production allowances, export production allowances and Article 5 allowances.* (1) A person

may increase or decrease its production allowances, export production allowances, or Article 5 allowances, for a specified control period through trades with another Party to the Protocol as set forth in this paragraph (c). Effective January 1, 2004, a nation listed either: in Appendix L of this subpart that is also listed in Appendix C, Annex 1 of the Protocol as having ratified the Beijing Amendments, or in Appendix C, Annex 1 of the Protocol as having ratified the Copenhagen Amendments but not listed in Appendix L of this subpart, or in Appendix C, Annex 2 of the Protocol, as being a foreign state complying with the Beijing Amendments if the foreign state is listed in Appendix L of this subpart, or as being a foreign state complying with the Copenhagen Amendments if the foreign state is not listed in Appendix L of this subpart must agree either to trade to the person for the current control period some quantity of production that the nation is permitted under the Montreal Protocol or to receive from the person for the current control period some quantity of production that the person is permitted under this subpart. The person must expend its consumption allowances allocated under § 82.19, or obtained under § 82.20 in order to produce with the additional production allowances.

(2) *Trade from a Party—Information requirements.* (i) A person requesting a trade from a Party must submit to the Administrator a signed document from the principal diplomatic representative in that nation's embassy in the U.S. stating that the appropriate authority within that nation will establish or revise production limits for the nation to equal the lowest of the following three production quantities:

(A) The maximum production that the nation is allowed under the Protocol minus the quantity (in kilograms) to be traded;

(B) The maximum production that is allowed under the nation's applicable domestic law minus the quantity (in kilograms) to be traded; or

(C) The average of the nation's actual national production level for the three years prior to the trade minus the production to be traded.

(ii) A person requesting a trade from a Party must also submit to the Administrator a true copy of the document that sets forth the following:

(A) The identity and address of the person;

(B) The identity of the Party;

(C) The names and telephone numbers of contact persons for the person and for the Party;

(D) The chemical type and quantity (in kilograms) of production being traded;

(E) Documentation that the Party possesses the necessary quantity of unexpended production rights;

(F) The control period(s) to which the trade applies; and

(G) For increased production intended for export to the Party from whom the allowances would be received, a signed statement of intent to export to the Party.

(3) *Trade to a Party—Information requirements.* A person requesting a trade to a Party must submit a request that sets forth the following information to the Administrator:

(i) The identity and address of the person;

(ii) The identity of the Party;

(iii) The names and telephone numbers of contact persons for the person and for the Party;

(iv) The chemical type and quantity (in kilograms) of allowable production being traded; and

(v) The control period(s) to which the trade applies.

(4) *Review of international trade request to a Party.* After receiving a trade request that meets the requirements of paragraph (c)(3) of this section, the Administrator may, at his/her discretion, consider the following factors by seeking concurrence from the Department of Commerce, the United States Trade Representative, and the Department of State, where appropriate, in deciding whether to approve such a trade:

(i) Possible creation of domestic economic hardship;

(ii) Possible effects on trade;

(iii) Potential environmental implications; and

(iv) The total quantity of unexpended production allowances held by U.S. entities.

(5) *Notice of trade.* If the request meets the requirement of paragraph (c)(2) of this section for trades from Parties and paragraphs (c)(3) and (4) of this section for trades to Parties, the Administrator will issue the person a notice. The notice will either grant or deduct production allowances or export production allowances or Article 5 allowances and specify the control period to which the trade applies. The Administrator may disapprove the trade request contingent on the consideration of factors listed in paragraph (c)(4) of this section for trades to Parties.

(i) For trades from a Party, the Administrator will issue a notice revising the allowances held by the recipient of the trade to equal the unexpended production allowances, unexpended export production allowances, or unexpended Article 5 allowances held by the recipient of the trade under this subpart plus the quantity of allowable production traded from the Party.

(ii) For trades to a Party, the Administrator will issue a notice revising the production limit for the trader to equal the lesser of:

(A) The unexpended production allowances, unexpended export production allowances or unexpended Article 5 allowances held by the trade or minus the quantity traded; or

(B) The unexpended production allowances held by the trader minus the amount by which the U.S. average annual production of the class II controlled substance being traded for the three years prior to the trade is less than the total allowable production of that class II controlled substance under this subpart minus the amount traded; or

(C) The total U.S. allowable production of the class II controlled substance being traded minus the three-year average of the actual annual U.S. production of the class II controlled substance prior to the control period of the trade.

(6) Revised notices of production limits for subsequent traders. If after one person obtains approval of a trade of allowable production of a class II controlled substance to a Party and other persons obtain approval for trades of the same class II controlled substance during the same control period, the Administrator will issue revised notices. The notices will revise the production limits for each of the other persons trading to equal the lesser of:

(i) The unexpended production allowances, unexpended export production allowances or unexpended Article 5 allowances held by the trader under this subpart minus the quantity traded; or

(ii) The result of the following set of calculations:

(A) The total U.S. allowable production of the class II controlled substance minus the three-year average of the actual annual U.S. production of the class II controlled substance prior to the control period of the trade;

(B) The quantity traded divided by the total quantity traded by all the other persons trading the same class II controlled substance in the same control period;

(C) The result of paragraph (c)(6)(ii)(A) of this section multiplied by the result of paragraph (c)(6)(ii)(B) of this section;

(D) The quantity derived in paragraph (c)(6)(i) of this section, minus the result of paragraph (c)(6)(ii)(C) of this section;

(7) Production limit for previous traders. The Administrator will also issue a notice revising the production limit for each trader who previously obtained approval of a trade of the class II controlled substance to a Party in the same control period to equal the result of the following set of calculations:

(i) The total U.S. allowable production of the class II controlled substance minus the three-year average of the actual annual U.S. production of the class II controlled substance prior to the control period of the trade;

(ii) The quantity traded by the person divided by the quantity traded by all the persons who have traded that class II controlled substance in that control period;

(iii) The result of paragraph (c)(7)(i) of this section multiplied by the result of paragraph (c)(7)(ii) of this section.

(iv) The unexpended production allowances, unexpended export production allowances or unexpended Article 5 allowances held by the person plus the result of paragraph (c)(7)(iii) of this section;

(8) Effective date of revised production limits. The change in production allowances, export production allowances or Article 5 allowances will be effective on the date that the notice is issued.

[68 FR 2848, Jan. 21, 2003, as amended at 74 FR 66446, Dec. 15, 2009]

## § 82.19 Apportionment of baseline consumption allowances for class II controlled substances.

Effective January 1, 2010, the following persons are apportioned baseline consumption allowances for HCFC–22, HCFC–141b, HCFC–142b, HCFC–123, HCFC–124, HCFC–225ca, and HCFC–225cb, as set forth in the following table:

| Person | Controlled substance | Allowances (kg) |
|---|---|---|
| ABCO Refrigeration Supply | HCFC–22 | 279,366 |
| AGC Chemicals Americas | HCFC–225ca | 285,328 |
| | HCFC–225cb | 286,832 |
| Altair Partners | HCFC–22 | 302,011 |
| Arkema | HCFC–22 | 29,524,481 |
| | HCFC–141b | 25,405,570 |
| | HCFC–142b | 16,672,675 |
| | HCFC–124 | 3,719 |
| Carrier | HCFC–22 | 54,088 |
| Condor Products | HCFC–22 | 74,843 |
| | HCFC–124 | 3,746 |
| Continental Industrial Group | HCFC–141b | 20,315 |
| Coolgas, Inc | HCFC–141b | 16,097,869 |
| | HCFC–123 | 20,000 |
| Coolgas Investment Property | HCFC–22 | 590,737 |
| Discount Refrigerants | HCFC–22 | 375,328 |
| | HCFC–141b | 994 |
| DuPont | HCFC–22 | 38,814,862 |
| | HCFC–141b | 9,049 |
| | HCFC–142b | 52,797 |
| | HCFC–123 | 1,877,042 |
| | HCFC–124 | 743,312 |
| H.G. Refrigeration Supply | HCFC–22 | 40,068 |
| Honeywell | HCFC–22 | 35,392,492 |
| | HCFC–141b | 20,749,489 |
| | HCFC–142b | 1,315,819 |
| | HCFC–124 | 1,284,265 |
| ICC Chemical Corp | HCFC–141b | 81,225 |
| ICOR | HCFC–124 | 81,220 |
| Ineos Fluor Americas | HCFC–22 | 2,546,305 |
| Kivlan & Company | HCFC–22 | 2,081,018 |
| MDA Manufacturing | HCFC–22 | 2,541,545 |
| Mondy Global | HCFC–22 | 281,824 |
| National Refrigerants | HCFC–22 | 5,528,316 |
| | HCFC–123 | 72,600 |
| | HCFC–124 | 50,380 |
| Perfect Technology Center, LP | HCFC–123 | 9,100 |
| Refricenter of Miami | HCFC–22 | 381,293 |
| Refricentro | HCFC–22 | 45,979 |
| R-Lines | HCFC–22 | 63,172 |
| Saez Distributors | HCFC–22 | 37,936 |
| Solvay Fluorides | HCFC–22 | 413,509 |
| | HCFC–141b | 3,940,115 |
| Solvay Solexis | HCFC–142b | 3,047,386 |
| Tulstar Products | HCFC–141b | 89,913 |
| | HCFC–123 | 34,800 |
| | HCFC–124 | 229,582 |
| USA Refrigerants | HCFC–22 | 14,865 |

[74 FR 66447, Dec. 15, 2009]

**§ 82.20 Availability of consumption allowances in addition to baseline consumption allowances for class II controlled substances.**

(a) A person may obtain at any time during the control period, in accordance with the provisions of this section, consumption allowances equivalent to the quantity of class II controlled substances that the person exported from the U.S. and its territories to a foreign state, in accordance with this section, when that quantity of class II controlled substance was produced in the U.S. or imported into the U.S. with expended consumption allowances.

(1) The exporter must submit to the Administrator a request for consumption allowances setting forth the following:

(i) The identities and addresses of the exporter and the recipient of the exports;

(ii) The exporter's Employer Identification Number;

(iii) The names and telephone numbers of contact persons for the exporter and the recipient;

(iv) The quantity (in kilograms) and type of class II controlled substances reported;

(v) The source of the class II controlled substances and the date purchased;

(vi) The date on which, and the port from which, the class II controlled substances were exported from the U.S. or its territories;

(vii) The country to which the class II controlled substances were exported;

(viii) A copy of the bill of lading and the invoice indicating the net quantity (in kilograms) of class II controlled substances shipped and documenting the sale of the class II controlled substances to the purchaser;

(ix) The commodity codes of the class II controlled substances reported; and

(x) A written statement from the producer that the class II controlled substances were produced with expended allowances or a written statement from the importer that the class II controlled substances were imported with expended allowances.

(2) The Administrator will review the information and documentation submitted under paragraph (a)(1) of this section and will issue a notice.

(i) The Administrator will determine the quantity of class II controlled substances that the documentation verifies was exported and issue consumption allowances equivalent to the quantity of class II controlled substances that were exported.

(A) The grant of the consumption allowances will be effective on the date the notice is issued.

(B) The consumption allowances will be granted to the person the exporter indicates, whether it is the producer, the importer, or the exporter.

(ii) The Administrator will issue a notice that the consumption allowances are not granted if the Administrator determines that the information and documentation do not satisfactorily substantiate the exporter's claims.

(b) *International trades of consumption allowances.* (1) A person may increase its consumption allowances for a specified control period through trades with another Party to the Protocol as set forth in this paragraph (b). A person may only receive consumption from Poland or Norway, or both, and only if the nation agrees to trade to the person for the current control period some quantity of consumption that the nation is permitted under the Montreal Protocol.

(2) Trade from a Party—Information requirements. A person must submit the following information to the Administrator:

(i) A signed document from the principal diplomatic representative in the Polish or Norwegian embassy in the U.S. stating that the appropriate authority within that nation will establish or revise consumption limits for the nation to equal the lowest of the following three consumption quantities:

(A) The maximum consumption that the nation is allowed under the Protocol minus the quantity (in kilograms) traded;

(B) The maximum consumption that is allowed under the nation's applicable domestic law minus the quantity (in kilograms) traded; or

(C) The average of the nation's actual consumption level for the three years

prior to the trade minus the consumption traded.

(ii) A person requesting a consumption trade from Poland or Norway must also submit to the Administrator a true copy of the document that sets forth the following:

(A) The identity and address of the person;

(B) The identity of the Party;

(C) The names and telephone numbers of contact persons for the person and for the Party;

(D) The chemical type and quantity (in kilograms) of consumption being traded;

(E) Documentation that the Party possesses the necessary quantity of unexpended consumption rights;

(F) The control period(s) to which the trade applies; and

(3) *Notice of trade*. If the request meets the requirement of paragraph (b)(2) of this section for trades from Parties, the Administrator will issue the person a notice. The notice will grant consumption allowances and specify the control period to which the trade applies. The Administrator may disapprove the trade request if it does not meet the requirements of paragraph (b)(2) of this section.

(4) *Trade from a Party*. The Administrator will issue a notice revising the allowances held by the recipient of the trade to equal the unexpended consumption allowances held by the recipient of the trade under this subpart plus the quantity of allowable consumption traded from the Party.

(5) *Effective date of revised consumption limits*. The change in consumption allowances will be effective on the date that the notice is issued.

[68 FR 2848, Jan. 21, 2003, as amended at 71 FR 41172, July 20, 2006]

### §§ 82.21–82.22 [Reserved]

### § 82.23 Transfers of allowances of class II controlled substances.

(a) *Inter-company transfers*. Effective January 1, 2003, a person (''transferor'') may transfer to any other person (''transferee'') any quantity of the transferor's class II consumption allowances, production allowances, export production allowances, or Article 5 allowances for the same type of allowance as follows:

(i) The transferor must submit to the Administrator a transfer claim setting forth the following:

(A) The identities and addresses of the transferor and the transferee;

(B) The name and telephone numbers of contact persons for the transferor and the transferee;

(C) The type of allowances being transferred, including the names of the class II controlled substances for which allowances are to be transferred;

(D) The quantity (in kilograms) of allowances being transferred;

(E) The control period(s) for which the allowances are being transferred;

(F) The quantity of unexpended allowances of the type and for the control period being transferred that the transferor holds under authority of this subpart on the date the claim is submitted to EPA; and

(G) For trades of consumption allowances, production allowances, export production allowances, or Article 5 allowances, the quantity of the 0.1 percent offset applied to the unweighted quantity traded that will be deducted from the transferor's allowance balance.

(ii) The Administrator will determine whether the records maintained by EPA indicate that the transferor possesses unexpended allowances sufficient to cover the transfer claim on the date the transfer claim is processed. The transfer claim is the quantity (in kilograms) to be transferred plus, in the case of transfers of production or consumption allowances, 0.1 percent of that quantity. The Administrator will take into account any previous transfers, any production, and allowable imports and exports of class II controlled substances reported by the transferor. Within three working days of receiving a complete transfer claim, the Administrator will take action to notify the transferor and transferee as follows:

(A) The Administrator will issue a notice indicating that EPA does not object to the transfer if EPA's records show that the transferor has sufficient unexpended allowances to cover the transfer claim. In the case of transfers of production or consumption allowances, EPA will reduce the transferor's

balance of unexpended allowances by the quantity to be transferred plus 0.1 percent of that quantity. In the case of transfers of export production or Article 5 allowances, EPA will reduce the transferor's balance of unexpended allowances, respectively, by the quantity to be transferred. The transferor and the transferee may proceed with the transfer when EPA issues a no objection notice. However, if EPA ultimately finds that the transferor did not have sufficient unexpended allowances to cover the claim, the transferor and transferee, where applicable, will be held liable for any knowing violations of the regulations of this subpart that occur as a result of, or in conjunction with, the improper transfer.

(B) The Administrator will issue a notice disallowing the transfer if EPA's records show that the transferor has insufficient unexpended allowances to cover the transfer claim, or that the transferor has failed to respond to one or more Agency requests to supply information needed to make a determination. Either party may file a notice of appeal, with supporting reasons, with the Administrator within 10 working days after receipt of notification. The Administrator may affirm or vacate the disallowance. If no appeal is taken by the tenth working day after notification, the disallowance shall be final on that day.

(iii) The transferor and transferee may proceed with the transfer if the Administrator does not respond to a transfer claim within the three working days specified in paragraph (a)(1)(ii) of this section. In the case of transfers of production or consumption allowances, EPA will reduce the transferor's balance of unexpended allowances by the quantity to be transferred plus 0.1 percent of that quantity. In the case of transfers of export production allowances or Article 5 allowances, EPA will reduce the transferor's balance of unexpended allowances by the quantity to be transferred plus 0.1 percent of that quantity. If EPA ultimately finds that the transferor did not have sufficient unexpended allowances to cover the claim, the transferor and/or the transferee, where applicable, will be held liable for any knowing violations of the regulations of this subpart that occur as a result of, or in conjunction with, the improper transfer.

(b) *Inter-pollutant transfers.* (1) Effective January 1, 2003, a person (transferor) may convert consumption allowances or production allowances for one class II controlled substance to the same type of allowance for another class II controlled substance listed in Appendix B of this subpart, following the procedures described in paragraph (b)(3) of this section.

(2) Inter-pollutant transfers will be permitted at any time during the control period and during the 30 days after the end of a control period.

(3) The transferor must submit to the Administrator a transfer claim that includes the following:

(i) The identity and address of the transferor;

(ii) The name and telephone number of a contact person for the transferor;

(iii) The type of allowances being converted, including the names of the class II controlled substances for which allowances are to be converted;

(iv) The quantity (in kilograms) and type of allowances to be converted;

(v) The quantity (in kilograms) of allowances to be subtracted from the transferor's unexpended allowances for the first class II controlled substance, to be equal to 100.1 percent of the quantity of allowances converted;

(vi) The quantity (in kilograms) of allowances to be added to the transferee's unexpended allowances for the second class II controlled substance, to be equal to the quantity (in kilograms) of allowances for the first class II controlled substance being converted multiplied by the quotient of the ozone depletion potential of the first class II controlled substance divided by the ozone depletion potential of the second class II controlled substance, as listed in Appendix B to this subpart;

(vii) The control period(s) for which the allowances are being converted; and

(viii) The quantity (in kilograms) of unexpended allowances of the type and for the control period being converted that the transferor holds under authority of this subpart as of the date the claim is submitted to EPA.

(4) The Administrator will determine whether the records maintained by EPA indicate that the convertor possesses unexpended allowances sufficient to cover the transfer claim on the date the transfer claim is processed (*i.e.*, the quantity (in kilograms) to be converted plus 0.1 percent of that quantity (in kilograms)). EPA will take into account any previous transfers, and any production, imports (not including transshipments or used class II controlled substances), or exports (not including transhipments or used class II controlled substances) of class II controlled substances reported by the convertor. Within three working days of receiving a complete transfer claim, the Administrator will take action to notify the convertor as follows:

(i) The Administrator will issue a notice indicating that EPA does not object to the transfer if EPA's records show that the convertor has sufficient unexpended allowances to cover the transfer claim. EPA will reduce the transferor's balance of unexpended allowances by the quantity to be converted plus 0.1 percent of that quantity (in kilograms). When EPA issues a no objection notice, the transferor may proceed with the transfer. However, if EPA ultimately finds that the transferor did not have sufficient unexpended allowances to cover the claim, the transferor will be held liable for any violations of the regulations of this subpart that occur as a result of, or in conjunction with, the improper transfer.

(ii) The Administrator will issue a notice disallowing the transfer if EPA's records show that the transferor has insufficient unexpended allowances to cover the transfer claim, or that the transferor has failed to respond to one or more Agency requests to supply information needed to make a determination. The transferor may file a notice of appeal, with supporting reasons, with the Administrator within 10 working days after receipt of notification. The Administrator may affirm or vacate the disallowance. If no appeal is taken by the tenth working day after notification, the disallowance shall be final on that day.

(iii) The transferor may proceed with the transfer if the Administrator does not respond to a transfer claim within the three working days specified in paragraph (b)(4) of this section. EPA will reduce the transferor's balance of unexpended allowances by the quantity (in kilograms) to be converted plus 0.1 percent of that quantity (in kilograms). The transferor will be held liable for any violations of the regulations of this subpart that occur as a result of, or in conjunction with, the improper transfer if EPA ultimately finds that the transferor did not have sufficient unexpended allowances or credits to cover the claim.

(c) *Inter-company transfers and Inter-pollutant transfers.* If a person requests an inter-company transfer and an inter-pollutant transfer simultaneously, the quantity (in kilograms) subtracted from the transferor's unexpended production or consumption allowances for the first class II controlled substance will be equal to 100.1 percent of the quantity (in kilograms) of allowances that are being converted and transferred.

(d) A person receiving a permanent transfer of baseline production allowances or baseline consumption allowances (the transferee) for a specific class II controlled substance will be the person who has their baseline allowances adjusted in accordance with phaseout schedules in this section.

[68 FR 2848, Jan. 21, 2003]

### § 82.24 Recordkeeping and reporting requirements for class II controlled substances.

(a) *Recordkeeping and reporting.* Any person who produces, imports, exports, transforms, or destroys class II controlled substances must comply with the following recordkeeping and reporting requirements:

(1) Reports required by this section must be mailed to the Administrator within 30 days of the end of the applicable reporting period, unless otherwise specified.

(2) Revisions of reports that are required by this section must be mailed to the Administrator within 180 days of the end of the applicable reporting period, unless otherwise specified.

(3) Records and copies of reports required by this section must be retained for three years.

(4) Quantities of class II controlled substances must be stated in terms of kilograms in reports required by this section.

(5) Reports and records required by this section may be used for purposes of compliance determinations. These requirements are not intended as a limitation on the use of other evidence admissible under the Federal Rules of Evidence. Failure to provide the reports, petitions and records required by this section and to certify the accuracy of the information in the reports, petitions and records required by this section, will be considered a violation of this subpart. False statements made in reports, petitions and records will be considered violations of Section 113 of the Clean Air Act and under 18 U.S.C. 1001.

(b) *Producers*. Persons (''producers'') who produce class II controlled substances during a control period must comply with the following recordkeeping and reporting requirements:

(1) *Reporting—Producers*. For each quarter, each producer of a class II controlled substance must provide the Administrator with a report containing the following information:

(i) The quantity (in kilograms) of production of each class II controlled substance used in processes resulting in their transformation by the producer and the quantity (in kilograms) intended for transformation by a second party;

(ii) The quantity (in kilograms) of production of each class II controlled substance used in processes resulting in their destruction by the producer and the quantity (in kilograms) intended for destruction by a second party;

(iii) The expended allowances for each class II controlled substance;

(iv) The producer's total of expended and unexpended production allowances, consumption allowances, export production allowances, and Article 5 allowances at the end of that quarter;

(v) The quantity (in kilograms) of class II controlled substances sold or transferred during the quarter to a person other than the producer for use in processes resulting in their transformation or eventual destruction;

(vi) A list of the quantities and names of class II controlled substances, exported by the producer to a Party to the Protocol, that will be transformed or destroyed and therefore were not produced expending production or consumption allowances;

(vii) For transformation in the U.S. or by a person of another Party, one copy of a transformation verification from the transformer for a specific class II controlled substance and a list of additional quantities shipped to that same transformer for the quarter;

(viii) For destruction in the U.S. or by a person of another Party, one copy of a destruction verification as required in paragraph (e) of this section for a particular destroyer, destroying the same class II controlled substance, and a list of additional quantities shipped to that same destroyer for the quarter;

(ix) In cases where the producer produced class II controlled substances using export production allowances, a list of U.S. entities that purchased those class II controlled substances and exported them to a Party to the Protocol;

(x) In cases where the producer produced class II controlled substances using Article 5 allowances, a list of U.S. entities that purchased those class II controlled substances and exported them to Article 5 countries; and

(xi) A list of the HCFC 141b-exemption allowance holders from whom orders were received and the quantity (in kilograms) of HCFC-141b requested and produced.

(2) *Recordkeeping—Producers*. Every producer of a class II controlled substance during a control period must maintain the following records:

(i) Dated records of the quantity (in kilograms) of each class II controlled substance produced at each facility;

(ii) Dated records of the quantity (in kilograms) of class II controlled substances produced for use in processes that result in their transformation or for use in processes that result in their destruction;

(iii) Dated records of the quantity (in kilograms) of class II controlled substances sold for use in processes that result in their transformation or for

use in processes that result in their destruction;

(iv) Dated records of the quantity (in kilograms) of class II controlled substances produced with export production allowances or Article 5 allowances;

(v) Copies of invoices or receipts documenting sale of class II controlled substances for use in processes that result in their transformation or for use in processes that result in their destruction;

(vi) Dated records of the quantity (in kilograms) of each class II controlled substance used at each facility as feedstocks or destroyed in the manufacture of a class II controlled substance or in the manufacture of any other substance, and any class II controlled substance introduced into the production process of the same class II controlled substance at each facility;

(vii) Dated records of the quantity (in kilograms) of raw materials and feedstock chemicals used at each facility for the production of class II controlled substances;

(viii) Dated records of the shipments of each class II controlled substance produced at each plant;

(ix) The quantity (in kilograms) of class II controlled substances, the date received, and names and addresses of the source of used materials containing class II controlled substances which are recycled or reclaimed at each plant;

(x) Records of the date, the class II controlled substance, and the estimated quantity of any spill or release of a class II controlled substance that equals or exceeds 100 pounds;

(xi) Transformation verification in the case of transformation, or the destruction verification in the case of destruction as required in paragraph (e) of this section showing that the purchaser or recipient of a class II controlled substance, in the U.S. or in another country that is a Party, certifies the intent to either transform or destroy the class II controlled substance, or sell the class II controlled substance for transformation or destruction in cases when allowances were not expended;

(xii) Written verifications from a U.S. purchaser that the class II controlled substance was exported to a Party in accordance with the requirements in this section, in cases where export production allowances were expended to produce the class II controlled substance;

(xiii) Written verifications from a U.S. purchaser that the class II controlled substance was exported to an Article 5 country in cases where Article 5 allowances were expended to produce the class II controlled substance;

(xiv) Written verifications from a U.S. purchaser that HCFC-141b was manufactured for the express purpose of meeting HCFC-141b exemption needs in accordance with information submitted under § 82.16(h), in cases where HCFC-141b exemption allowances were expended to produce the HCFC-141b.

(3) For any person who fails to maintain the records required by this paragraph, or to submit the report required by this paragraph, the Administrator may assume that the person has produced at full capacity during the period for which records were not kept, for purposes of determining whether the person has violated the prohibitions at § 82.15.

(c) *Importers.* Persons (''importers'') who import class II controlled substances during a control period must comply with the following recordkeeping and reporting requirements:

(1) *Reporting—Importers.* For each quarter, an importer of a class II controlled substance (including importers of used class II controlled substances) must submit to the Administrator a report containing the following information:

(i) Summaries of the records required in paragraphs (c)(2)(i) through (xvi) of this section for the previous quarter;

(ii) The total quantity (in kilograms) imported of each class II controlled substance for that quarter;

(iii) The commodity code for the class II controlled substances imported, which must be one of those listed in Appendix K to this subpart;

(iv) The quantity (in kilograms) of those class II controlled substances imported that are used class II controlled substances;

(v) The quantity (in kilograms) of class II controlled substances imported

for that quarter and totaled by chemical for the control period to date;

(vi) For substances for which EPA has apportioned baseline production and consumption allowances, the importer's total sum of expended and unexpended consumption allowances by chemical as of the end of that quarter;

(vii) The quantity (in kilograms) of class II controlled substances imported for use in processes resulting in their transformation or destruction;

(viii) The quantity (in kilograms) of class II controlled substances sold or transferred during that quarter to each person for use in processes resulting in their transformation or eventual destruction; and

(ix) Transformation verifications showing that the purchaser or recipient of imported class II controlled substances intends to transform those substances or destruction verifications showing that the purchaser or recipient intends to destroy the class II controlled substances (as provided in paragraph (e) of this section).

(x) [Reserved]

(xi) A list of the HCFC 141b-exemption allowance holders from whom orders were received and the quantity (in kilograms) of HCFC-141b requested and imported.

(2) *Recordkeeping—Importers*. An importer of a class II controlled substance (including used class II controlled substances) must maintain the following records:

(i) The quantity (in kilograms) of each class II controlled substance imported, either alone or in mixtures, including the percentage of each mixture which consists of a class II controlled substance;

(ii) The quantity (in kilograms) of those class II controlled substances imported that are used and the information provided with the petition where a petition is required under paragraph (c)(3) of this section;

(iii) The quantity (in kilograms) of class II controlled substances other than transhipments or used substances imported for use in processes resulting in their transformation or destruction;

(iv) The quantity (in kilograms) of class II controlled substances other than transhipments or used substances imported and sold for use in processes that result in their destruction or transformation;

(v) The date on which the class II controlled substances were imported;

(vi) The port of entry through which the class II controlled substances passed;

(vii) The country from which the imported class II controlled substances were imported;

(viii) The commodity code for the class II controlled substances shipped, which must be one of those listed in Appendix K to this subpart;

(ix) The importer number for the shipment;

(x) A copy of the bill of lading for the import;

(xi) The invoice for the import;

(xii) The quantity (in kilograms) of imports of used class II controlled substances;

(xiii) The U.S. Customs entry form;

(xiv) Dated records documenting the sale or transfer of class II controlled substances for use in processes resulting in their transformation or destruction;

(xv) Copies of transformation verifications or destruction verifications indicating that the class II controlled substances will be transformed or destroyed (as provided in paragraph (e) of this section).

(xvi) Written verifications from a U.S. purchaser that HCFC-141b was imported for the express purpose of meeting HCFC-141b exemption needs in accordance with information submitted under § 82.16(h), and that the quantity will not be resold, in cases where HCFC-141b exemption allowances were expended to import the HCFC-141b.

(3) *Petition to import used class II controlled substances and transhipment-Importers*. For each individual shipment over 5 pounds of a used class II controlled substance as defined in § 82.3 for which EPA has apportioned baseline production and consumption allowances, an importer must submit directly to the Administrator, at least 40 working days before the shipment is to leave the foreign port of export, the following information in a petition:

(i) The name and quantity (in kilograms) of the used class II controlled substance to be imported;

(ii) The name and address of the importer, the importer ID number, the contact person, and the phone and fax numbers;

(iii) Name, address, contact person, phone number and fax number of all previous source facilities from which the used class II controlled substance was recovered;

(iv) A detailed description of the previous use of the class II controlled substance at each source facility and a best estimate of when the specific controlled substance was put into the equipment at each source facility, and, when possible, documents indicating the date the material was put into the equipment;

(v) A list of the name, make and model number of the equipment from which the material was recovered at each source facility;

(vi) Name, address, contact person, phone number and fax number of the exporter and of all persons to whom the material was transferred or sold after it was recovered from the source facility;

(vii) The U.S. port of entry for the import, the expected date of shipment and the vessel transporting the chemical. If at the time of submitting a petition the importer does not know the U.S. port of entry, the expected date of shipment and the vessel transporting the chemical, and the importer receives a non-objection notice for the individual shipment in the petition, the importer is required to notify the Administrator of this information prior to the actual U.S. Customs entry of the individual shipment;

(viii) A description of the intended use of the used class II controlled substance, and, when possible, the name, address, contact person, phone number and fax number of the ultimate purchaser in the United States;

(ix) The name, address, contact person, phone number and fax number of the U.S. reclamation facility, where applicable;

(x) If someone at the source facility recovered the class II controlled substance from the equipment, the name and phone and fax numbers of that person;

(xi) If the imported class II controlled substance was reclaimed in a foreign Party, the name, address, contact person, phone number and fax number of any or all foreign reclamation facility(ies) responsible for reclaiming the cited shipment;

(xii) An export license from the appropriate government agency in the country of export and, if recovered in another country, the export license from the appropriate government agency in that country;

(xiii) If the imported used class II controlled substance is intended to be sold as a refrigerant in the U.S., the name and address of the U.S. reclaimer who will bring the material to the standard required under subpart F of this part, if not already reclaimed to those specifications; and

(xiv) A certification of accuracy of the information submitted in the petition.

(4) *Review of petition to import used class II controlled substances and transhipments—Importers.* Starting on the first working day following receipt by the Administrator of a petition to import a used class II controlled substance, the Administrator will initiate a review of the information submitted under paragraph (c)(3) of this section and take action within 40 working days to issue either an objection-notice or a non-objection notice for the individual shipment to the person who submitted the petition to import the used class II controlled substance.

(i) The Administrator may issue an objection notice to a petition for the following reasons:

(A) If the Administrator determines that the information is insufficient, that is, if the petition lacks or appears to lack any of the information required under paragraph (c)(3) of this section;

(B) If the Administrator determines that any portion of the petition contains false or misleading information, or the Administrator has information from other U.S. or foreign government agencies indicating that the petition contains false or misleading information;

(C) If the transaction appears to be contrary to provisions of the Vienna Convention on Substances that Deplete the Ozone Layer, the Montreal Protocol and Decisions by the Parties, or

the non-compliance procedures outlined and instituted by the Implementation Committee of the Montreal Protocol;

(D) If the appropriate government agency in the exporting country has not agreed to issue an export license for the cited individual shipment of used class II controlled substance;

(E) If reclamation capacity is installed or is being installed for that specific class II controlled substance in the country of recovery or country of export and the capacity is funded in full or in part through the Multilateral Fund.

(ii) Within ten (10) working days after receipt of the objection notice, the importer may re-petition the Administrator, only if the Administrator indicated ''insufficient information'' as the basis for the objection notice. If no appeal is taken by the tenth working day after the date on the objection notice, the objection shall become final. Only one re-petition will be accepted for any original petition received by EPA.

(iii) Any information contained in the re-petition which is inconsistent with the original petition must be identified and a description of the reason for the inconsistency must accompany the re-petition.

(iv) In cases where the Administrator does not object to the petition based on the criteria listed in paragraph (c)(4)(i) of this section, the Administrator will issue a non-objection notice.

(v) To pass the approved used class II controlled substances through U.S. Customs, the petition and the non-objection notice issued by EPA must accompany the shipment through U.S. Customs.

(vi) If for some reason, following EPA's issuance of a non-objection notice, new information is brought to EPA's attention which shows that the non-objection notice was issued based on false information, then EPA has the right to:

(A) Revoke the non-objection notice;

(B) Pursue all means to ensure that the class II controlled substance is not imported into the U.S.; and

(C) Take appropriate enforcement actions.

(vii) Once the Administrator issues a non-objection notice, the person receiving the non-objection notice is permitted to import the individual shipment of used class II controlled substance only within the same control period as the date stamped on the non-objection notice.

(viii) A person receiving a non-objection notice from the Administrator for a petition to import used class II controlled substances must maintain the following records:

(A) A copy of the petition;

(B) The EPA non-objection notice;

(C) The bill of lading for the import; and

(D) U.S. Customs entry documents for the import that must include one of the commodity codes from Appendix K to this subpart.

(5) Recordkeeping for transhipments—Importers. Any person who tranships a class II controlled substance must maintain records that indicate:

(i) That the class II controlled substance shipment originated in a foreign country;

(ii) That the class II controlled substance shipment is destined for another foreign country; and

(iii) That the class II controlled substance shipment will not enter interstate commerce within the U.S.

(d) *Exporters*. Persons (''exporters'') who export class II controlled substances during a control period must comply with the following reporting requirements:

(1) *Reporting—Exporters*. For any exports of class II controlled substances not reported under § 82.20 (additional consumption allowances), or under paragraph (b)(2) of this section (reporting for producers of class II controlled substances), each exporter who exported a class II controlled substance must submit to the Administrator the following information within 30 days after the end of each quarter in which the unreported exports left the U.S.:

(i) The names and addresses of the exporter and the recipient of the exports;

(ii) The exporter's Employer Identification Number;

(iii) The type and quantity (in kilograms) of each class II controlled substance exported and what percentage, if any of the class II controlled substance is used;

(iv) The date on which, and the port from which, the class II controlled substances were exported from the U.S. or its territories;

(v) The country to which the class II controlled substances were exported;

(vi) The quantity (in kilograms) exported to each Article 5 country;

(vii) The commodity code for the class II controlled substances shipped, which must be one of those listed in Appendix K to this subpart;

(viii) For persons reporting transformation or destruction, the invoice or sales agreement containing language similar to the transformation verifications that the purchaser or recipient of imported class II controlled substances intends to transform those substances, or destruction verifications showing that the purchaser or recipient intends to destroy the class II controlled substances (as provided in paragraph (e) of this section).

(2) *Reporting export production allowances—Exporters.* In addition to the information required in paragraph (d)(1) of this section, any exporter using export production allowances must also provide the following to the Administrator:

(i) The Employer Identification Number on the Shipper's Export Declaration Form or Employer Identification Number of the shipping agent shown on the U.S. Customs Form 7525;

(ii) The exporting vessel on which the class II controlled substances were shipped; and

(iii) The quantity (in kilograms) exported to each Party.

(3) *Reporting Article 5 allowances—Exporters.* In addition to the information required in paragraph (d)(1) of this section, any exporter using Article 5 allowances must also provide the following to the Administrator:

(i) The Employer Identification Number on the Shipper's Export Declaration Form or Employer Identification Number of the shipping agent shown on the U.S. Customs Form 7525; and

(ii) The exporting vessel on which the class II controlled substances were shipped.

(4) *Reporting used class II controlled substances—Exporters.* Any exporter of used class II controlled substances must indicate on the bill of lading or invoice that the class II controlled substance is used, as defined in § 82.3.

(e) *Transformation and destruction.* Any person who transforms or destroys class II controlled substances must comply with the following recordkeeping and reporting requirements:

(1) *Recordkeeping—Transformation and destruction.* Any person who transforms or destroys class II controlled substances produced or imported by another person must maintain the following:

(i) Copies of the invoices or receipts documenting the sale or transfer of the class II controlled substances to the person;

(ii) Records identifying the producer or importer of the class II controlled substances received by the person;

(iii) Dated records of inventories of class II controlled substances at each plant on the first day of each quarter;

(iv) Dated records of the quantity (in kilograms) of each class II controlled substance transformed or destroyed;

(v) In the case where class II controlled substances were purchased or transferred for transformation purposes, a copy of the person's transformation verification as provided under paragraph (e)(3)of this section.

(vi) Dated records of the names, commercial use, and quantities (in kilograms) of the resulting chemical(s) when the class II controlled substances are transformed; and

(vii) Dated records of shipments to purchasers of the resulting chemical(s) when the class II controlled substances are transformed.

(viii) In the case where class II controlled substances were purchased or transferred for destruction purposes, a copy of the person's destruction verification, as provided under paragraph (e)(5) of this section.

(2) *Reporting—Transformation and destruction.* Any person who transforms or destroys class II controlled substances and who has submitted a transformation verification ((paragraph

(e)(3) of this section) or a destruction verification (paragraph (e)(5) of this section) to the producer or importer of the class II controlled substances, must report the following:

(i) The names and quantities (in kilograms) of the class II controlled substances transformed for each control period within 45 days of the end of such control period; and

(ii) The names and quantities (in kilograms) of the class II controlled substances destroyed for each control period within 45 days of the end of such control period.

(3) *Reporting—Transformation*. Any person who purchases class II controlled substances for purposes of transformation must provide the producer or importer with a transformation verification that the class II controlled substances are to be used in processes that result in their transformation.

(i) The transformation verification shall include the following:

(A) Identity and address of the person intending to transform the class II controlled substances;

(B) The quantity (in kilograms) of class II controlled substances intended for transformation;

(C) Identity of shipments by purchase order number(s), purchaser account number(s), by location(s), or other means of identification;

(D) Period of time over which the person intends to transform the class II controlled substances; and

(E) Signature of the verifying person.

(ii) [Reserved]

(4) *Reporting—Destruction*. Any person who destroys class II controlled substances shall provide EPA with a one-time report containing the following information:

(i) The destruction unit's destruction efficiency;

(ii) The methods used to record the volume destroyed;

(iii) The methods used to determine destruction efficiency;

(iv) The name of other relevant federal or state regulations that may apply to the destruction process;

(v) Any changes to the information in paragraphs (e)(4)(i), (ii), and (iii) of this section must be reflected in a revision to be submitted to EPA within 60 days of the change(s).

(5) *Reporting—Destruction*. Any person who purchases or receives and subsequently destroys class II controlled substances that were originally produced without expending allowances shall provide the producer or importer from whom it purchased or received the class II controlled substances with a verification that the class II controlled substances will be used in processes that result in their destruction.

(i) The destruction verification shall include the following:

(A) Identity and address of the person intending to destroy class II controlled substances;

(B) Indication of whether those class II controlled substances will be completely destroyed, as defined in § 82.3, or less than completely destroyed, in which case the destruction efficiency at which such substances will be destroyed must be included;

(C) Period of time over which the person intends to destroy class II controlled substances; and

(D) Signature of the verifying person.

(ii) [Reserved]

(f) *Heels-Recordkeeping and reporting*. Any person who brings into the U.S. a rail car, tank truck, or ISO tank containing a heel, as defined in § 82.3, of class II controlled substances, must take the following actions:

(1) Indicate on the bill of lading or invoice that the class II controlled substance in the container is a heel.

(2) Report within 30 days of the end of the control period the quantity (in kilograms) brought into the U.S. and certify:

(i) That the residual quantity (in kilograms) in each shipment is no more than 10 percent of the volume of the container;

(ii) That the residual quantity (in kilograms) in each shipment will either:

(A) Remain in the container and be included in a future shipment;

(B) Be recovered and transformed;

(C) Be recovered and destroyed; or

(D) Be recovered for a non-emissive use.

(3) Report on the final disposition of each shipment within 30 days of the end of the control period.

(g) *HCFC 141b exemption allowances—Reporting and recordkeeping.* (1) Any person allocated HCFC-141b exemption allowances who confers a quantity of the HCFC-141b exemption allowances to a producer or import and places an order for the production or import of HCFC-141b with a verification that the HCFC-141b will only be used for the exempted purpose and not be resold must submit semi-annual reports, due 30 days after the end of the second and fourth respectively, to the Administrator containing the following information:

(i) Total quantity (in kilograms) HCFC-141b received during the 6 month period; and

(ii) The identity of the supplier of HCFC-141b on a shipment-by-shipment basis during the 6 month period.

(2) Any person allocated HCFC-141b exemption allowances must keep records of letters to producers and importers conferring unexpended HCFC-141b exemption allowances for the specified control period in the notice, orders for the production or import of HCFC-141b under those letters and written verifications that the HCFC-141b was produced or imported for the express purpose of meeting HCFC-141b exemption needs in accordance with information submitted under §82.16(h), and that the quantity will not be resold.

[68 FR 2848, Jan. 21, 2003, as amended at 71 FR 41172, July 20, 2006]

## APPENDIX A TO SUBPART A OF PART 82—CLASS I CONTROLLED SUBSTANCES

| Class 1 controlled substances | ODP |
|---|---|
| A. Group I: | |
| $CFCl_3$-Trichlorofluoromethane (CFC-ll) | 1.0 |
| $CF_2$ $Cl_2$-Dichlorofiflu0romethane (CFC-12) | 1.0 |
| $C_2$ $F_3$ $Cl_3$-Trichlorotrifluoroethane (CFC-113) | 0.8 |
| $C_2$ $F_4$ $Cl_2$-Dichlorotetrafluoroethane (CFC-114) | 1.0 |
| $C_2$ $F_5$ Cl-Monochloropentafluoroethane (CFC-115) | 0.6 |
| All isomers of the above chemicals | |
| B. Group II: | |
| $CF_2$ ClBr-Bromochlorodifluoromethane (Halon-1211) | 3.0 |
| $CF_3$ Br-Bromotrifluoromethane (Halon-1301) | 10.0 |
| $C_2$ $F_4$ $Br_2$-Dibromotetrafluoroethane (Halon-2402) | 6.0 |
| All isomers of the above chemicals | |
| C. Group III: | |
| $CF_3$ Cl-Chlorotrifluoromethane (CFC-13) | 1.0 |
| $C_2$ $FCl_5$-(CFC-111) | 1.0 |
| $C_2$ $F_2$ $Cl_4$-(CFC-112) | 1.0 |
| $C_3$ $FCl_7$-(CFC-211) | 1.0 |
| $C_3$ $F_2$ $Cl_6$-(CFC-212) | 1.0 |
| $C_3$ $F_3$ $Cl_5$-(CFC-213) | 1.0 |
| $C_3$ $F_4$ $Cl_4$-(CFC-214) | 1.0 |
| $C_3$ $F_5$ $Cl_3$-(CFC-215) | 1.0 |
| $C_3$ $F_6$ $Cl_2$-(CFC-216) | 1.0 |
| $C_3$ $F_7$ Cl-(CFC-217) | 1.0 |
| All isomers of the above chemicals | |
| D. Group IV: $CCl_4$-Carbon Tetrachloride | 1.1 |
| E. Group V: | |
| $C_2$ $H_3$ $Cl_3$-1,1,1 Trichloroethane (Methyl chloroform) | 0.1 |
| All isomers of the above chemical except 1,1,2-trichloroethane | |
| F. Group VI: $CH_3$ Br—Bromomethane (Methyl Bromide) | 0.7 |
| G. Group VII: | |
| $CHFBR_2$ | 1.00 |
| $CHF_2$ Br (HBFC–2201) | 0.74 |
| $CH_2$ FBr | 0.73 |
| $C_2$ $HFBr_4$ | 0.3–0.8 |
| $C_2$ $HF_2$ $Br_3$ | 0.5–1.8 |
| $C_2$ $HF_3$ $Br_2$ | 0.4–1.6 |
| $C_2$ $HF_4$ Br | 0.7–1.2 |
| $C_2$ $H_2$ $FBr_3$ | 0.1–1.1 |
| $C_2$ $H_2$ $F_2$ $Br_2$ | 0.2–1.5 |
| $C_2$ $H_2$ $F_3$ Br | 0.7–1.6 |
| $C_2$ $H_2$ $FBr_2$ | 0.1–1.7 |
| $C_2$ $H_3$ $F_2$ Br | 0.2–1.1 |
| $C_2$ $H_4$ FBr | 0.07–0.1 |
| $C_3$ $HFBr_6$ | 0.3–1.5 |
| $C_3$ $HF_2$ $Br_5$ | 0.2–1.9 |
| $C_3$ $HF_3$ $Br_4$ | 0.3–1.8 |
| $C_3$ $HF_4$ $Br_3$ | 0.5–2.2 |
| $C_3$ $HF_5$ $Br_2$ | 0.9–2.0 |
| $C_3$ $HF_6$ Br | 0.7–3.3 |
| $C_3$ $H_2$ $FBR_5$ | 0.1–1.9 |
| $C_3$ $H_2$ $F_2$ $BR_4$ | 0.2–2.1 |
| $C_3$ $H_2$ $F_3$ $Br_3$ | 0.2–5.6 |
| $C_3$ $H_2$ $F_4$ $Br_2$ | 0.3–7.5 |
| $C_3$ $H_2$ $F_5$ BR | 0.9–14 |
| $C_3$ $H_3$ $FBR_4$ | 0.08–1.9 |
| $C_3$ $H_3$ $F_2$ $Br_3$ | 0.1–3.1 |
| $C_3$ $H_3$ $F_3$ $Br_2$ | 0.1–2.5 |
| $C_3$ $H_3$ $F_4$ Br | 0.3–4.4 |
| $C_3$ $H_4$ $FBr_3$ | 0.03–0.3 |
| $C_3$ $H_4$ $F_2$ $Br_2$ | 0.1–1.0 |
| $C_3$ $H_4$ $F_3$ Br | 0.07–0.8 |
| $C_3$ $H_5$ $FBr_2$ | 0.04–0.4 |
| $C_3$ $H_5$ $F_2$ Br | 0.07–0.8 |
| $C_3$ $H_6$ FB | 0.02–0.7 |
| H. Group VIII: | |
| CH2BrCl (Chlorobromomethane 0.12. | |

[60 FR 24986, May 10, 1995, as amended at 68 FR 42892, July 18, 2003]

## APPENDIX B TO SUBPART A OF PART 82—CLASS II CONTROLLED SUBSTANCES [A]

| Controlled Substance | ODP |
|---|---|
| 1. Dichlorofluoromethane (HCFC-21) | 0.04 |
| 2. Monochlorodifluoromethane (HCFC-22). | 0.055 |
| 3. Monochlorofluoromethane (HCFC-31) | 0.02 |
| 4. Tetrachlorofluoroethane (HCFC-121) | 0.01–0.04 |
| 5. Trichlorodifluoroethane (HCFC-122) | 0.02–0.08 |
| 6. Dichlorotrifluoroethane (HCFC-123) | 0.02 |
| 7. Monochlorotetrafluoroethane (HCFC-124). | 0.022 |
| 8. Trichlorofluoroethane (HCFC-131) | 0.007–0.05 |
| 9. Dichlorodifluoroethane (HCFC-132) | 0.008–0.05 |

| Controlled Substance | ODP |
|---|---|
| 10. Monochlorotrifluoroethane (HCFC-133). | 0.02–0.06 |
| 11. Dichlorofluoroethane (HCFC-141b) ... | 0.11 |
| 12. Monochlorodifluoroethane (HCFC-142b). | 0.065 |
| 13. Chlorofluoroethane (HCFC-151) ..... | 0.003–0.005 |
| 14. Hexachlorofluoropropane (HCFC-221). | 0.015–0.07 |
| 15. Pentachlorodifluoropropane (HCFC-222). | 0.01–0.09 |
| 16. Tetrachlorotrifluoropropane (HCFC-223). | 0.01–0.08 |
| 17. Trichlorotetrafluoropropane (HCFC-224). | 0.01–0.09 |
| 18. Dichloropentafluoropropane (HCFC-225ca). | 0.025 |
| 19. Dichloropentafluoropropane (HCFC-225cb). | 0.033 |
| 20. Monochlorohexafluoropropane (HCFC-226). | 0.02–0.10 |
| 21. Pentachlorofluoropropane (HCFC-231). | 0.05–0.09 |
| 22. Tetrachlorodifluoropropane (HCFC-232). | 0.008–0.10 |
| 23. Trichlorotrifluoropropane (HCFC-233) | 0.007–0.23 |
| 24. Dichlorotetrafluoropropane (HCFC-234). | 0.01–0.28 |
| 25. Monochloropentafluoropropane (HCFC-235). | 0.03–0.52 |
| 26. Tetrachlorofluoropropane (HCFC-241). | 0.004–0.09 |
| 27. Trichlorodifluoropropane (HCFC-242) | 0.005–0.13 |
| 28. Dichlorotrifluoropropane (HCFC-243) | 0.007–0.12 |
| 29. Monochlorotetrafluoropropane (HCFC-244). | 0.009–0.14 |
| 30. Trichlorofluoropropane (HCFC-251) .. | 0.001–0.01 |
| 31. Dichlorodifluoropropane (HCFC-252) | 0.005–0.04 |
| 32. Monochlorotrifluoropropane (HCFC-253). | 0.003–0.03 |
| 33. Dichlorofluoropropane (HCFC-261) .. | 0.002–0.02 |
| 34. Monochlorodifluoropropane (HCFC-262). | 0.002–0.02 |
| 35. Monochlorofluoropropane (HCFC-271). | 0.001–0.03 |

[a] According to Annex C of the Montreal Protocol, ''Where a range of ODPs is indicated, the highest value in that range shall be used for the purposes of the Protocol. The ODPs listed as a single value have been determined from calculations based on laboratory measurements. Those listed as a range are based on estimates and are less certain. The range pertains to an isomeric group. The upper value is the estimate of the ODP of the isomer with the highest ODP, and the lower value is the estimate of the ODP of the isomer with the lowest ODP.''

[68 FR 2859, Jan. 21, 2003]

## Appendix C to Subpart A of Part 82—Parties to the Montreal Protocol, and Nations Complying With, But Not Parties to, the Protocol

### Annex 1 to Appendix C of Subpart A—Parties to the Montreal Protocol (as of January 29, 2003)

The check mark [✓] means the particular country ratified the Protocol or the specific Amendment package. Amendment packages are identified by the name of the city where the amendment package was negotiated and agreed. Updated lists of Parties to the Protocol and the Amendments can be located at: *http://www.unep.org/ozone/ratif.shtml*.

| Foreign state | Montreal protocol | London amendments | Copenhagen amendments | Montreal amendments | Beijing amendments |
|---|---|---|---|---|---|
| Albania | ✓ | | | | |
| Algeria | ✓ | ✓ | ✓ | | |
| Angola | ✓ | | | | |
| Antigua and Barbuda | ✓ | ✓ | ✓ | ✓ | |
| Argentina | ✓ | ✓ | ✓ | ✓ | |
| Armenia | ✓ | | | | |
| Australia | ✓ | ✓ | ✓ | ✓ | |
| Austria | ✓ | ✓ | ✓ | ✓ | |
| Azerbaijan | ✓ | ✓ | ✓ | ✓ | |
| Bahamas | ✓ | ✓ | ✓ | | |
| Bahrain | ✓ | ✓ | ✓ | ✓ | |
| Bangladesh | ✓ | ✓ | ✓ | ✓ | |
| Barbados | ✓ | ✓ | ✓ | ✓ | ✓ |
| Belarus | ✓ | ✓ | | | |
| Belgium | ✓ | ✓ | ✓ | | |
| Belize | ✓ | ✓ | ✓ | | |
| Benin | ✓ | ✓ | ✓ | | |
| Bolivia | ✓ | ✓ | ✓ | ✓ | |
| Bosnia and Herzegovina | ✓ | | | | |
| Botswana | ✓ | ✓ | ✓ | | |
| Brazil | ✓ | ✓ | ✓ | | |
| Brunei Darussalam | ✓ | | | | |
| Bulgaria | ✓ | ✓ | ✓ | ✓ | ✓ |
| Burkina Faso | ✓ | ✓ | ✓ | ✓ | ✓ |
| Burundi | ✓ | ✓ | ✓ | ✓ | ✓ |
| Cambodia | ✓ | | | | |
| Cameroon | ✓ | ✓ | ✓ | | |
| Canada | ✓ | ✓ | ✓ | ✓ | ✓ |
| Cape Verde | ✓ | ✓ | ✓ | ✓ | |
| Central African Republic | ✓ | | | | |
| Chad | ✓ | ✓ | ✓ | ✓ | |
| Chile | ✓ | ✓ | ✓ | ✓ | ✓ |

| Foreign state | Montreal protocol | London amendments | Copenhagen amendments | Montreal amendments | Beijing amendments |
|---|---|---|---|---|---|
| China | ✓ | ✓ | | | |
| Colombia | ✓ | ✓ | ✓ | | |
| Comoros | ✓ | ✓ | ✓ | ✓ | ✓ |
| Congo | ✓ | ✓ | ✓ | ✓ | ✓ |
| Congo, Democratic Republic of | ✓ | ✓ | ✓ | | |
| Costa Rica | ✓ | ✓ | ✓ | | |
| Cote d'Ivoire | ✓ | ✓ | | | |
| Croatia | ✓ | ✓ | ✓ | ✓ | ✓ |
| Cuba | ✓ | ✓ | ✓ | | |
| Cyprus | ✓ | ✓ | | | |
| Czech Republic | ✓ | ✓ | ✓ | ✓ | ✓ |
| Denmark | ✓ | ✓ | ✓ | | |
| Djibouti | ✓ | ✓ | ✓ | ✓ | |
| Dominica | ✓ | ✓ | | | |
| Dominican Republic | ✓ | ✓ | ✓ | | |
| Ecuador | ✓ | ✓ | ✓ | | |
| Egypt | ✓ | ✓ | ✓ | ✓ | |
| El Salvador | ✓ | ✓ | ✓ | ✓ | |
| Estonia | ✓ | ✓ | ✓ | | |
| Ethiopia | ✓ | | | | |
| European Community | ✓ | ✓ | ✓ | ✓ | ✓ |
| Federated States of Micronesia | ✓ | ✓ | ✓ | ✓ | ✓ |
| Fiji | ✓ | ✓ | ✓ | | |
| Finland | ✓ | ✓ | ✓ | ✓ | ✓ |
| France | ✓ | ✓ | ✓ | | |
| Gabon | ✓ | ✓ | ✓ | ✓ | ✓ |
| Gambia | ✓ | ✓ | | | |
| Georgia | ✓ | ✓ | ✓ | ✓ | |
| Germany | ✓ | ✓ | ✓ | ✓ | ✓ |
| Ghana | ✓ | ✓ | ✓ | | |
| Greece | ✓ | ✓ | ✓ | | |
| Grenada | ✓ | ✓ | ✓ | ✓ | |
| Guatemala | ✓ | ✓ | ✓ | ✓ | ✓ |
| Guinea | ✓ | ✓ | | | |
| Guinea Bissau | ✓ | ✓ | ✓ | ✓ | ✓ |
| Guyana | ✓ | ✓ | ✓ | ✓ | |
| Haiti | ✓ | ✓ | ✓ | ✓ | |
| Honduras | ✓ | ✓ | ✓ | | |
| Hungary | ✓ | ✓ | ✓ | ✓ | ✓ |
| Iceland | ✓ | ✓ | ✓ | ✓ | |
| India | ✓ | ✓ | | | |
| Indonesia | ✓ | ✓ | ✓ | | |
| Iran, Islamic | ✓ | ✓ | ✓ | ✓ | |
| Ireland | ✓ | ✓ | ✓ | | |
| Israel | ✓ | ✓ | ✓ | | |
| Italy | ✓ | ✓ | ✓ | ✓ | |
| Jamaica | ✓ | ✓ | ✓ | | |
| Japan | ✓ | ✓ | ✓ | ✓ | ✓ |
| Jordan | ✓ | ✓ | ✓ | ✓ | ✓ |
| Kazakhstan | ✓ | ✓ | | | |
| Kenya | ✓ | ✓ | ✓ | ✓ | |
| Kiribati | ✓ | | | | |
| Korea, Democratic People's Republic of | ✓ | ✓ | ✓ | ✓ | ✓ |
| Korea, Republic of | ✓ | ✓ | ✓ | ✓ | |
| Kuwait | ✓ | ✓ | ✓ | | |
| Kyrgyzstan | ✓ | | | | |
| Lao, People's Democratic Republic | ✓ | | | | |
| Latvia | ✓ | ✓ | ✓ | ✓ | |
| Lebanon | ✓ | ✓ | ✓ | ✓ | |
| Lesotho | ✓ | | | | |
| Liberia | ✓ | ✓ | ✓ | | |
| Libyan Arab Jamahiriya | ✓ | ✓ | | | |
| Liechtenstein | ✓ | ✓ | ✓ | | |
| Lithuania | ✓ | ✓ | ✓ | | |
| Luxembourg | ✓ | ✓ | ✓ | ✓ | ✓ |
| Madagascar | ✓ | ✓ | ✓ | ✓ | ✓ |
| Malawi | ✓ | ✓ | ✓ | | |
| Malaysia | ✓ | ✓ | ✓ | ✓ | ✓ |
| Maldives | ✓ | ✓ | ✓ | ✓ | ✓ |
| Mali | ✓ | ✓ | | | |
| Malta | ✓ | ✓ | | | |
| Marshall Islands | ✓ | ✓ | ✓ | | |
| Mauritania | ✓ | | | | |

| Foreign state | Montreal protocol | London amendments | Copenhagen amendments | Montreal amendments | Beijing amendments |
|---|---|---|---|---|---|
| Mauritius | ✓ | ✓ | ✓ | | |
| Mexico | ✓ | ✓ | ✓ | | |
| Moldova | ✓ | ✓ | ✓ | | |
| Monaco | ✓ | ✓ | ✓ | ✓ | |
| Mongolia | ✓ | ✓ | ✓ | ✓ | |
| Morocco | ✓ | ✓ | ✓ | | |
| Mozambique | ✓ | ✓ | ✓ | | |
| Myanmar | ✓ | ✓ | | | |
| Namibia | ✓ | ✓ | | | |
| Nauru | ✓ | | | | |
| Nepal | ✓ | ✓ | | | |
| Netherlands | ✓ | ✓ | ✓ | ✓ | ✓ |
| New Zealand | ✓ | ✓ | ✓ | ✓ | ✓ |
| Nicaragua | ✓ | ✓ | ✓ | | |
| Niger | ✓ | ✓ | ✓ | ✓ | |
| Nigeria | ✓ | ✓ | ✓ | ✓ | |
| Norway | ✓ | ✓ | ✓ | ✓ | ✓ |
| Oman | ✓ | ✓ | ✓ | | |
| Pakistan | ✓ | ✓ | ✓ | | |
| Palau | ✓ | ✓ | ✓ | ✓ | ✓ |
| Panama | ✓ | ✓ | ✓ | ✓ | ✓ |
| Papua New Guinea | ✓ | ✓ | | | |
| Paraguay | ✓ | ✓ | ✓ | ✓ | |
| Peru | ✓ | ✓ | ✓ | | |
| Philippines | ✓ | ✓ | ✓ | | |
| Poland | ✓ | ✓ | ✓ | ✓ | |
| Portugal | ✓ | ✓ | ✓ | | |
| Qatar | ✓ | ✓ | ✓ | | |
| Romania | ✓ | ✓ | ✓ | ✓ | |
| Russian Federation | ✓ | ✓ | | | |
| Rwanda | ✓ | | | | |
| Saint Kitts & Nevis | ✓ | ✓ | ✓ | ✓ | |
| Saint Lucia | ✓ | ✓ | ✓ | ✓ | ✓ |
| Saint Vincent and the Grenadines | ✓ | ✓ | ✓ | | |
| Samoa | ✓ | ✓ | ✓ | ✓ | ✓ |
| Sao Tome and Principe | ✓ | ✓ | ✓ | ✓ | ✓ |
| Saudi Arabia | ✓ | ✓ | ✓ | | |
| Senegal | ✓ | ✓ | ✓ | ✓ | |
| Seychelles | ✓ | ✓ | ✓ | ✓ | ✓ |
| Sierra Leone | ✓ | ✓ | ✓ | ✓ | ✓ |
| Singapore | ✓ | ✓ | ✓ | ✓ | |
| Slovakia | ✓ | ✓ | ✓ | ✓ | ✓ |
| Slovenia | ✓ | ✓ | ✓ | ✓ | ✓ |
| Solomon Island | ✓ | ✓ | ✓ | ✓ | |
| Somalia | ✓ | ✓ | ✓ | ✓ | ✓ |
| South Africa | ✓ | ✓ | ✓ | | |
| Spain | ✓ | ✓ | ✓ | ✓ | ✓ |
| Sri Lanka | ✓ | ✓ | ✓ | ✓ | ✓ |
| Sudan | ✓ | ✓ | ✓ | | |
| Suriname | ✓ | | | | |
| Swaziland | ✓ | | | | |
| Sweden | ✓ | ✓ | ✓ | ✓ | ✓ |
| Switzerland | ✓ | ✓ | ✓ | ✓ | ✓ |
| Syrian Arab Republic | ✓ | ✓ | ✓ | ✓ | |
| Tajikistan | ✓ | ✓ | | | |
| Tanzania, United Republic of | ✓ | ✓ | ✓ | ✓ | ✓ |
| Thailand | ✓ | ✓ | ✓ | | |
| The Former Yugoslav Republic of Macedonia | ✓ | ✓ | ✓ | ✓ | ✓ |
| Togo | ✓ | ✓ | ✓ | ✓ | ✓ |
| Tonga | ✓ | | | | |
| Trinidad and Tobago | ✓ | ✓ | ✓ | ✓ | |
| Tunisia | ✓ | ✓ | ✓ | ✓ | |
| Turkey | ✓ | ✓ | ✓ | | |
| Turkmenistan | ✓ | ✓ | | | |
| Tuvalu | ✓ | ✓ | ✓ | ✓ | |
| Uganda | ✓ | ✓ | ✓ | ✓ | |
| Ukraine | ✓ | ✓ | ✓ | | |
| United Arab Emirates | ✓ | | | | |
| United Kingdom | ✓ | ✓ | ✓ | ✓ | ✓ |
| United States of America | ✓ | ✓ | ✓ | | |
| Uruguay | ✓ | ✓ | ✓ | ✓ | |
| Uzbekistan | ✓ | ✓ | ✓ | | |

| Foreign state | Montreal protocol | London amendments | Copenhagen amendments | Montreal amendments | Beijing amendments |
|---|---|---|---|---|---|
| Vanuatu | ✓ | ✓ | ✓ | | |
| Venezuela | ✓ | ✓ | ✓ | ✓ | |
| Viet Nam | ✓ | ✓ | ✓ | | |
| Yemen | ✓ | ✓ | ✓ | ✓ | |
| Yugoslavia | ✓ | | | | |
| Zambia | ✓ | ✓ | | | |

ANNEX 2 TO APPENDIX C OF SUBPART A—NATIONS COMPLYING WITH, BUT NOT PARTIES TO, THE PROTOCOL [RESERVED]

Annex 3 to Appendix C of Subpart A: Nations that are Parties to the Montreal Protocol that have not yet Ratified all applicable Amendments to the Protocol but have Notified the Ozone Secretariat and Properly Submitted Supporting Documentation in Accordance with the Requirements of Decision XV/3.

| Non-article 5 parties | Party to the Copenhagen amendment | Party to the Beijing Amendment | Parties that have submitted data in accordance with Dec. XV/3, para 1 (c)(iii) | | |
|---|---|---|---|---|---|
| | | | 1(c)(ii) | 1(c)(ii), Article 2, 2A–2G | 1(c)(ii), Article 4 |
| Australia | Yes | No | Yes | Yes | Yes |
| Austria | Yes | No. | | | |
| Azerbaijan | Yes | No. | | | |
| Belarus | No | No. | | | |
| Belgium | Yes | No. | | | |
| Bulgaria | Yes | Yes. | | | |
| Canada | Yes | Yes. | | | |
| Czech Republic | Yes | Yes. | | | |
| Denmark | Yes | Yes. | | | |
| Estonia | Yes | No. | | | |
| European Community | Yes | Yes. | | | |
| Finland | Yes | Yes. | | | |
| France | Yes | Yes. | | | |
| Germany | Yes | Yes. | | | |
| Greece | Yes | No | Yes | Yes | Yes |
| Hungary | Yes | Yes. | | | |
| Iceland | Yes | Yes. | | | |
| Ireland | Yes | No. | | | |
| Israel | Yes | No. | | | |
| Italy | Yes | No | Yes | Yes | Yes |
| Japan | Yes | Yes. | | | |
| Kazakhstan | No | No | Yes | Yes | Yes |
| Latvia | Yes | No. | | | |
| Liechtenstein | Yes | Yes. | | | |
| Lithuania | Yes | No | Yes. | | |
| Luxembourg | Yes | Yes. | | | |
| Monaco | Yes | Yes. | | | |
| Netherlands | Yes | Yes. | | | |
| New Zealand | Yes | Yes. | | | |
| Norway | Yes | Yes. | | | |
| Poland | Yes | No | Yes | Yes | Yes |
| Portugal | Yes | No | Yes | Yes | Yes |
| Russian Federation | No | No. | | | |
| Slovakia | Yes | Yes. | | | |
| Slovenia | Yes | Yes. | | | |
| Spain | Yes | Yes. | | | |
| Sweden | Yes | Yes. | | | |
| Switzerland | Yes | Yes. | | | |
| Tajikistan | No | No. | | | |
| Turkmenistan | No | No. | | | |
| Ukraine | Yes | No. | | | |
| United Kingdom | Yes | Yes. | | | |
| United States of America | Yes | Yes. | | | |
| Uzbekistan | Yes | No. | | | |

ANNEX 4 TO APPENDIX C OF SUBPART A: NATIONS THAT ARE PARTIES TO THE MONTREAL PROTOCOL AND ARE OPERATING UNDER ARTICLE 5(1)

LIST OF ARTICLE 5 PARTIES

1. Afghanistan
2. Albania
3. Algeria
4. Angola
5. Antigua & Barbuda
6. Argentina
7. Armenia
8. Bahamas
9. Bahrain
10. Bangladesh
11. Barbados
12. Belize
13. Benin
14. Bhutan
15. Bolivia
16. Bosnia and Herzegovina
17. Botswana
18. Brazil
19. Brunei Darussalam
20. Burkina Faso
21. Burundi
22. Cambodia
23. Cameroon
24. Cape Verde
25. Central African Republic
26. Chad
27. Chile
28. China
29. Colombia
30. Comoros
31. Congo
32. Congo, Democratic Republic of
33. Cook Islands
34. Cost Rica
35. Côte d'Ivoire
36. Croatia
37. Cuba
38. Djibouti
39. Dominica
40. Dominican Republic
41. Ecuador
42. Egypt
43. El Salvador
44. Equatorial Guinea
45. Eritrea
46. Ethiopia
47. Fiji
48. Gabon
49. Gambia
50. Georgia
51. Ghana
52. Grenada
53. Guatemala
54. Guinea
55. Guinea Bissau
56. Guyana
57. Haiti
58. Honduras
59. India
60. Indonesia
61. Iran, Islamic Republic of
62. Iraq
63. Jamaica
64. Jordan
65. Kenya
66. Kiribati
67. Korea, People's Democratic Republic of
68. Korea, Republic of
69. Kuwait
70. Kyrgyzstan
71. Lao People's Democratic Republic
72. Lebanon
73. Lesotho
74. Liberia
75. Libyan Arab Jamahiriya
76. Madagascar
77. Malawi
78. Malaysia
79. Maldives
80. Mali
81. Marshall Islands
82. Mauritania
83. Mauritius
84. Mexico
85. Micronesia, Federal States of
86. Moldova
87. Mongolia
88. Montenegro
89. Morocco
90. Mozambique
91. Myanmar
92. Namibia
93. Nauru
94. Nepal
95. Nicaragua
96. Niger
97. Nigeria
98. Niue
99. Oman
100. Pakistan
101. Palau
102. Panama
103. Papua New Guinea
104. Paraguay
105. Peru
106. Philippines
107. Qatar
108. Rwanda
109. Saint Kitts and Nevis
110. Saint Lucia
111. Saint Vincent & the Grenadines
112. Samoa
113. Sao Tome and Principe
114. Saudi Arabia
115. Senegal
116. Serbia
117. Seychelles
118. Sierra Leone
119. Singapore
120. Solomon Islands
121. Somalia
122. South Africa
123. Sri Lanka
124. Sudan
125. Suriname
126. Swaziland
127. Syrian Arab Republic
128. Tanzania, United Republic of

129. Thailand
130. The Former Yugoslav Republic of Macedonia
131. Timor-Leste
132. Togo
133. Tonga
134. Trinidad and Tobago
135. Tunisia
136. Turkey
137. Turkmenistan
138. Tuvalu
139. Uganda
140. United Arab Emirates
141. Uruguay
142. Vanuatu
143. Venezuela
144. Viet Nam
145. Yemen
146. Zambia
147. Zimbabwe

[68 FR 43936, July 25, 2003, as amended at 69 FR 34031, June 17, 2004; 74 FR 66447, Dec. 15, 2009]

## APPENDIX D TO SUBPART A OF PART 82—HARMONIZED TARIFF SCHEDULE DESCRIPTION OF PRODUCTS THAT MAY CONTAIN CONTROLLED SUBSTANCES IN APPENDIX A, CLASS I, GROUPS I AND II

This Appendix is based on information provided by the Ozone Secretariat of the United Nations Ozone Environment Programme.** The Appendix lists available U.S. harmonized tariff schedule codes identifying headings and subheadings for Annex D products that may contain controlled substances.

The Harmonized Tariff Schedule of the United States uses an enumeration system to identify products imported and exported to and from the U.S. This system relies on a four digit heading, a four digit subheading and additional two digit statistical suffix to characterize products. The United States uses the suffix for its own statistical records and analyses. This Appendix lists only headings and subheadings.

While some can be readily associated with harmonized system codes, many products cannot be tied to HS classifications unless their exact composition and the presentation are known. It should be noted that the specified HS classifications represent the most likely headings and subheadings which may contain substances controlled by the Montreal Protocol. The codes given should only be used as a starting point; further verfication is needed to ascertain whether or not the products actually contain controlled substances.

### CATEGORY 1. AUTOMOBILE AND TRUCK AIR CONDITIONING UNITS (WHETHER INCORPORATED IN VEHICLES OR NOT)

There are no separate code numbers for air conditioning units specially used in automobiles and trucks. Although a code has been proposed for car air conditioners, it is not yet officially listed in the Harmonized Tariff Schedule (see category 2). The following codes apply to the vehicles potentially containing air conditioning units.

| *Heading/Subheading* | *Article Description* |
|---|---|
| 8701.(10, 20, 30, 90)*** | Tractors. |
| 8702 | Public-transport type passenger motor vehicles. |
| 8702.10 | With compression-ignition internal-combustion piston engine (diesel or semi-diesel). |
| 8702.90 | Other. |
| 8703 | Motor cars and other motor vehicles principally designed for the transport of persons (other than those of heading 8702), including station wagons and racing cars. |
| 8703.10 | Vehicles specially designed for traveling on snow; golf carts and similar vehicles; includes subheading 10.10 and 10.50. |
| 8703.(21, 22, 23, 24) | Other vehicles, with spark-ignition internal combustion reciprocating engines. |
| 8703.(31, 32, 33, 90) | Other vehicles, with compression-ignition internal combustion piston engine (diesel or semi-diesel). |
| 8704 | Motor vehicles for the transport of goods. |
| 8704.10.(10, 50) | Dumpers designed for off-highway use. |
| 8704.(21, 22, 23) | Other, with compression-ignition internal combustion piston engine (diesel or semi-diesel). |
| 8704.(31, 32, 90) | Other, with compression-ignition internal combustion piston engine. |

** ''A Note Regarding the Harmonized System Code Numbers for the Products Listed in Annex D.'' Adopted by Decision IV/15 paragraph 3, of the Fourth Meeting of the Parties in Copenhagen, 23–25 November, 1992.

| *Heading/Subheading* | *Article Description* |
|---|---|
| 8705 | Special purpose motor vehicles, other than those principally designed for the transport of persons or goods (for example, wreckers, mobile cranes, fire fighting vehicles, concrete mixers, road sweepers, spraying vehicles, mobile workshops, mobile radiological units). |
| 8705.10 | Crane lorries. |
| 8705.20 | Mobile drilling derricks. |
| 8705.30 | Fire fighting vehicles. |
| 8705.90 | Other. |

***At this time vehicle air conditioning units are considered components of vehicles or are classified under the general category for air conditioning and refrigeration equipment. Vehicles containing air conditioners are therefore considered products containing controlled substances.

CATEGORY 2. DOMESTIC AND COMMERCIAL REFRIGERATION AND AIR CONDITIONING/HEAT PUMP EQUIPMENT

Domestic and commercial air conditioning and refrigeration equipment fall primarily under headings 8415 and 8418.

| *Heading/Subheading* | *Article Description* |
|---|---|
| 8415 | Air conditioning machines, comprising a motor-driven fan and elements for changing the temperature and humidity, including those machines in which the humidity cannot be separately regulated. |
| 8415.20 | Proposed code for air conditioning of a kind used for persons, in motor vehicles. |
| 8415.10.00 | A/C window or wall types, self-contained. |
| 8415.81.00 | Other, except parts, incorporating a refrigerating unit and a valve for reversal of the cooling/heat cycle. |
| 8415.82.00 | Other, incorporating a refrigerating unit— |
| | Self-contained machines and remote condenser type air conditioners (not for year-round use). |
| | Year-round units (for heating and cooling). |
| | Air Conditioning evaporator coils. |
| | Dehumidifiers. |
| | Other air conditioning machines incorporating a refrigerating unit. |
| 8415.83 | Automotive air conditioners. |
| 8418 | Refrigerators, freezers and other refrigerating or freezing equipment, electric or other; heat pumps, other than air conditioning machines of heading 8415; parts thereof. |
| 8418.10.00 | Combined refrigerator-freezers, fitted with separate external doors. |
| 8418.21.00 | Refrigerators, household type, Compression type. |
| 8418.22.00 | Absorption type, electrical. |
| 8418.29.00 | Other. |
| 8418.30.00 | Freezers of the chest type. |
| 8418.40 | Freezers of the upright type. |
| 8418.50.0040 | Other refrigerating or freezing chests, cabinets, display counters, showcases and similar refrigerating or freezing furniture. |
| 8418.61.00 | Other refrigerating or freezing equipment; heat pumps. |
| 8418.69 | Other— |
| | Icemaking machines. |
| | Drinking water coolers, self-contained. |
| | Soda fountain and beer dispensing equipment. |
| | Centrifugal liquid chilling refrigerating units. |
| | Absorption liquid chilling units. |
| | Reciprocating liquid chilling units. |
| | Other refrigerating or freezing equipment (household or other). |
| 8479.89.10 | Dehumidifiers (other than those under 8415 or 8424 classified as ''machines and mechanical appliances having individual functions, not specified or included elsewhere''). |

CATEGORY 3. AEROSOL PRODUCTS

An array of different products use controlled substances as aerosols and in aerosol applications. Not all aerosol applications use controlled substances, however. The codes given below represent the most likely classifications for products containing controlled substances. The product codes listed include ****:

- varnishes
- perfumes
- preparations for use on hair
- preparations for oral and dental hygiene
- shaving preparations
- personal deodorants, bath preparations
- prepared room deodorizers
- soaps
- lubricants
- polishes and creams
- explosives
- insecticides, fungicides, herbicides, disinfectants
- arms and ammunition
- household products such as footwear or leather polishes
- other miscellaneous products

| *Heading/Subheading* | *Article Description* |
|---|---|
| 3208 | Paints and varnishes ***** (including enamels and lacquers) based on synthetic polymers of chemically modified natural polymers, dispersed or dissolved in a non-aqueous medium. |
| 3208.10 | Based on polyesters. |
| 3208.20 | Based on acrylic or vinyl polymers. |
| 3208.90 | Other. |
| 3209 | Paints and varnishes (including enamels and lacquers) based on synthetic polymers or chemically modified natural polymers, dispersed or dissolved in an aqueous medium. |
| 3209.10 | Based on acrylic or vinyl polymers. |
| 3209.90 | Other. |
| 3210.00 | Other paints and varnishes (including enamels, lacquers and distempers) and prepared water pigments of a kind used for finishing leather. |
| 3212.90 | Dyes and other coloring matter put up in forms or packings for retail sale. |
| 3303.00 | Perfumes and toilet waters. |
| 3304.30 | Manicure or pedicure preparations. |
| 3305.10 | Shampoos. |
| 3305.20 | Preparations for permanent waving or straightening. |
| 3305.30 | Hair lacquers. |
| 3305.90 | Other hair preparations. |
| 3306.10 | Dentrifices. |
| 3306.90 | Other dental (this may include breath sprays). |
| 3307.10 | Pre-shave, shaving or after-shave preparations. |
| 3307.20 | Personal deodorants and antiperspirants. |
| 3307.30 | Perfumed bath salts and other bath preparations. |
| 3307.49 | Other (this may include preparations for perfuming or deodorizing rooms, including odoriferous preparations used during religious rites, whether or not perfumed or having disinfectant properties). |
| 3307.90 | Other (this may include depilatory products and other perfumery, cosmetic or toilet preparations, not elsewhere specified or included) |

**** Other categories of products that may contain controlled substances are listed below. EPA is currently working to match them with appropriate codes. They include: coatings and electronic equipment (e.g., electrical motors), coatings or cleaning fluids for aircraft maintenance, mold release agents (e.g. for production of plastic or elastomeric materials), water and oil repellant (potentially under HS 3402), spray undercoats (potentially under ''paints and varnishes''), spot removers, brake cleaners, safety sprays (e.g., mace cans), animal repellant, noise horns (e.g., for use on boats), weld inspection developers, freezants, gum removers, intruder alarms, tire inflators, dusters (for electronic and non-electronic applications), spray shoe polish, and suede protectors.

| *Heading/Subheading* | *Article Description* |
|---|---|
| 3403 | Lubricating preparations (including cutting-oil preparations, bolt or nut release preparations, anti-rust or anti-corrosion preparations and mould release preparations, based on lubricants), and preparations of a kind used for the oil or grease treatment of textile materials, leather, fur skins or other materials, but excluding preparations containing, as basic constituents, 70 percent or more by weight of petroleum oils or of oils obtained from bituminous minerals. |
| 3402 | Organic surface-active agents (other than soap); surface-active preparations, washing preparations and cleaning operations, whether or not containing soap, other than those of 3401. |
| 3402.20 | Preparations put up for retail sale. |
| 3402.19 | Other preparations containing petroleum oils or oils obtained from bituminous minerals. |
| 3403 | Lubricating preparations consisting of mixtures containing silicone greases or oils, as the case may be. |
| 2710.00 | Preparations not elsewhere specified or included, containing by weight 70 percent or more of petroleum oils or of oils obtained from bituminous minerals, these oils being the basic constituents of the preparations. |
| 3403.11 | Lubricants containing petroleum oils or oils obtained from bituminous minerals used for preparations from the treatment of textile materials, leather, fur skins or other materials. |
| 3403.19 | Other preparations containing petroleum oils or oils obtained from bituminous minerals. |
| 3405 | Polishes and creams, for footwear, furniture, floors, coachwork, glass or metal, scouring pastes and powders and similar preparations excluding waxes of heading 3404. |
| 3405.10 | Polishes and creams for footwear or leather. |
| 3405.20 | Polishes for wooden furniture, floors or other woodwork. |
| 36 | Explosives. |
| 3808 | Insecticides, rodenticides, fungicides, herbicides, anti-sprouting products and plant-growth regulators, disinfectants and similar products, put up in forms or packings for retail sale or as preparations or articles (for example, sulphur-treated bands, wicks and candles, and fly papers). |
| 3808.10 | Insecticides. |
| 3808.20 | Fungicides. |
| 3808.30 | Herbicides, anti-sprouting products and plant growth regulators. |
| 3808.40 | Disinfectants. |
| 3808.90 | Other insecticides, fungicides. |
| 3809.10 | Finishing agents, dye carriers to accelerate the dyeing or fixing of dye-stuffs and other products and preparations (for example, dressings and mordants) of a kind used in the textile, paper, leather or like industries, not elsewhere specified or included, with a basis of amylaceous substances. |
| 3814 | Organic composite solvents and thinners (not elsewhere specified or included) and the prepared paint or varnish removers. |
| 3910 | Silicones in primary forms. |
| 9304 | Other arms (for example, spring, air or gas guns and pistols, truncheons), excluding those of heading No. 93.07. Thus, aerosol spray cans containing tear gas may be classified under this subheading. |
| 0404.90 | Products consisting of natural milk constituents, whether or not containing added sugar or other sweetening matter, not elsewhere specified or included. |

| *Heading/Subheading* | *Article Description* |
|---|---|
| 1517.90 | Edible mixtures or preparations of animal or vegetable fats or oils or of fractions of different fats or oils of this chapter, other than edible fats or oils or their fractions of heading No. 15.16. |
| 2106.90 | Food preparations not elsewhere specified or included. |

***** Although paints do not generally use contain controlled substances, some varnishes use CFC 113 and 1,1,1,trichlorethane as solvents.

CATEGORY 4. PORTABLE FIRE EXTINGUISHERS

| *Heading/Subheading* | *Article Description* |
|---|---|
| 8424 | Mechanical appliances (whether or not hand operated) for projecting, dispersing, or spraying liquids or powders; fire extinguishers whether or not charged, spray guns and similar appliances; steam or sand blasting machines and similar jet projecting machines. |
| 8424.10 | Fire extinguishers, whether or not charged. |

CATEGORY 5. INSULATION BOARDS, PANELS AND PIPE COVERS

These goods have to be classified according to their composition and presentation. For example, if the insulation materials are made of polyurethane, polystyrene, polyolefin and phenolic plastics, then they may be classified Chapter 39, for ''Plastics and articles thereof''. The exact description of the products at issue is necessary before a classification can be given. ******

| *Heading/Subheading* | *Article Description* |
|---|---|
| 3917.21 to 3917.39 | Tubes, pipes and hoses of plastics. |
| 3920.10 to 3920.99 | Plates, sheets, film, foil and strip made of plastics, non-cellular and not reinforced, laminated, supported or similarly combined with other materials. |
| 3921.11 to 3921.90 | Other plates, sheets, film, foil and strip, made of plastics. |
| 3925.90 | Builders' ware made of plastics, not elsewhere specified or included. |
| 3926.90 | Articles made of plastics, not elsewhere specified or included. |

CATEGORY 6. PRE-POLYMERS

According to the Explanatory Notes to the Harmonized Commodity Description and Coding System, ''prepolymers are products which are characterized by some repetition of monomer units although they may contain unreacted monomers. Prepolymers are not normally used as such but are intended to be transformed into higher molecular weight polymers by further polymerization. Therefore the term does not cover finished products, such as di-isobutylenes or mixed polyethylene glycols with very low molecular weight. Examples are epoxides based with epichlorohydrin, and polymeric isocyanates.''

| *Heading/Subheading* | *Article Description* |
|---|---|
| 3901 | Pre-polymers based on ethylene (in primary forms). |
| 3902 | Pre-polymers based on propylene or other olefins (in primary forms). |
| 3903, 3907, 3909 | Pre-polymers based on styrene (in primary forms), epoxide and phenols. |

****** This category may include insulating board for building panels and windows and doors. It also includes rigid appliance insulation for pipes, tanks, trucks, trailers, containers, train cars & ships, refrigerators, freezers, beverage vending machines, bulk beverage dispensers, water coolers and heaters and ice machines.

## APPENDIX E TO SUBPART A OF PART 82—ARTICLE 5 PARTIES

Afghanistan, Albania, Algeria, Angola, Antigua & Barbuda, Argentina, Armenia, Bahamas, Bahrain, Bangladesh, Barbados, Belize, Benin, Bhutan, Bolivia, Bosnia and Herzegovina, Botswana, Brazil, Brunei Darussalam, Burkina Faso, Burundi, Cambodia, Cameroon, Cape Verde, Central African Republic, Chad, Chile, China, Colombia, Comoros, Congo, Congo, Democratic Republic of, Cook Islands, Cost Rica, Côte d'Ivoire, Croatia, Cuba, Djibouti, Dominica, Dominican Republic, Ecuador, Egypt, El Salvador, Equatorial Guinea, Eritrea, Ethiopia, Fiji, Gabon, Gambia, Georgia, Ghana, Grenada, Guatemala, Guinea, Guinea Bissau, Guyana, Haiti, Honduras, India, Indonesia, Iran, Islamic Republic of, Iraq, Jamaica, Jordan, Kenya, Kiribati, Korea, People's Democratic Republic of, Korea, Republic of, Kuwait, Kyrgyzstan, Lao People's Democratic Republic, Lebanon, Lesotho, Liberia, Libyan Arab Jamahiriya, Madagascar, Malawi, Malaysia, Maldives, Mali, Marshall Islands, Mauritania, Mauritius, Mexico, Micronesia, Federal States of, Moldova, Mongolia, Montenegro, Morocco, Mozambique, Myanmar, Namibia, Nauru, Nepal, Nicaragua, Niger, Nigeria, Niue, Oman, Pakistan, Palau, Panama, Papua New Guinea, Paraguay, Peru, Philippines, Qatar, Rwanda, Saint Kitts and Nevis, Saint Lucia, Saint Vincent & the Grenadines, Samoa, Sao Tome and Principe, Saudi Arabia, Senegal, Serbia, Seychelles, Sierra Leone, Singapore, Solomon Islands, Somalia, South Africa, Sri Lanka, Sudan, Suriname, Swaziland, Syrian Arab Republic, Tanzania, United Republic of, Thailand, The Former Yugoslav Republic of Macedonia, Timor-Leste, Togo, Tonga, Trinidad and Tobago, Tunisia, Turkey, Turkmenistan, Tuvalu, Uganda, United Arab Emirates, Uruguay, Vanuatu, Venezuela, Viet Nam, Yemen, Zambia, Zimbabwe.

[74 FR 66448, Dec. 15, 2009]

## APPENDIX F TO SUBPART A OF PART 82—LISTING OF OZONE-DEPLETING CHEMICALS

| Controlled substance | ODP | AT L | CLP | BLP |
|---|---|---|---|---|
| A. Class I: | | | | |
| 1. Group I: | | | | |
| $CFCl_3$-Trichlorofluoromethane (CFC-11) | 1.0 | 60.0 | 1.0 | 0.00 |
| $CF_2$ $Cl_2$-Dichlorodifluoromethane (CFC-12) | 1.0 | 120.0 | 1.5 | 0.00 |
| $C_2$ $F_3$ $Cl_3$-Trichlorotrifluoroethane (CFC-113) | 0.8 | 90.0 | 1.11 | 0.00 |
| $C_2$ $F_4$ $Cl_2$-Dichlorotetrafluoroethane (CFC-114) | 1.0 | 200.00 | 1.8 | 0.00 |
| $C_2$ $F_5$ Cl-Monochloropentafluoroethane (CFC-115) | 0.6 | 400.0 | 2.0 | 0.00 |
| All isomers of the above chemicals | | [Reserved] | | |
| 2. Group II: | | | | |
| $CF_2$ ClBr-Bromochlorodifluoromethane (Halon-1211) | 3.0 | 12 | 0.06 | 0.13 |
| | ..... | −18 | −.08 | −.03 |
| $CF_3$ Br-Bromotrifluoromethane (Halon-1301) | 10.0 | 72 | 0.00 | 1.00 |
| | ..... | −107 | | |
| $C_2$ $F_4$ $Br_2$-Dibromotetrafluoroethane (Halon-2402) | 6.0 | 23 | 0.00 | 0.30 |
| | ..... | −28 | ..... | −.37 |
| All isomers of the above chemicals | | [Reserved] | | |
| 3. Group III: | | | | |
| $CF_3$ Cl-Chlorotrifluoromethane (CFC-13) | 1.0 | 120 | 0.88 | 0.00 |
| | −250 | −1.83 | | |
| $C_2$ $FCl_5$- (CFC-111) | 1.0 | 60 | 1.04 | 0.00 |
| | −90 | −1.56 | | |
| $C_2$ $F_2$ $Cl_4$- (CFC-112) | 1.0 | 60 | 0.90 | 0.00 |
| | −90 | −1.35 | | |
| $C_3$ $FCl_7$- (CFC-211) | 1.0 | 100 | 1.76 | 0.00 |
| | −500 | −8.81 | | |
| $C_3$ $F_2$ $Cl_6$- (CFC-212) | 1.0 | 100 | 1.60 | 0.00 |
| | −500 | −7.98 | | |
| $C_3$ $F_3$ $Cl_5$- (CFC-213) | 1.0 | 100 | 1.41 | 0.00 |
| | −500 | −7.06 | | |
| $C_3$ $F_4$ $Cl_4$- (CFC-214) | 1.0 | 100 | 1.20 | 0.00 |
| | −500 | −6.01 | | |
| $C_3$ $F_5$ $Cl_3$ -(CFC-215) | 1.0 | 100 | 0.96 | 0.00 |
| | −500 | −4.82 | | |
| $C_3$ $F_6$ $Cl_2$- (CFC-216) | 1.0 | 100 | 0.69 | 0.00 |
| | −500 | −3.45 | | |
| $C_3$ $F_7$ Cl- (CFC-217) | 1.0 | 100 | 0.37 | 0.00 |
| | −500 | −1.87 | | |
| All isomers of the above chemicals | | [Reserved] | | |
| 4. Group IV: | | | | |

| Controlled substance | ODP | AT L | CLP | BLP |
|---|---|---|---|---|
| $CCl_4$ -Carbon Tetrachloride | 1.1 | 50.0 | 1.0 | 0.00 |
| 5. Group V: | | | | |
| $C_2$ $H_3$ $Cl_3$-1,1,1 Trichloroethane (Methyl chloroform) | 0.1 | 6.3 | 0.11 | 0.00 |
| All isomers of the above chemical except 1,1,2-trichloroethane | | [Reserved] | | |
| 6. Group VI: | | | | |
| CH3Br-Bromomethane (Methyl Bromide) | 0.7 | | [Reserved] | |
| 7. Group VII: | | | | |
| $CHFBr_2$- | 1.00 | | [Reserved] | |
| $CHF_2Br$-(HBFC–22B1) | 0.74 | | [Reserved] | |
| $CH_2FBr$ | 0.73 | | [Reserved] | |
| $C_2HFBr_4$ | 0.3–0.8 | | [Reserved] | |
| $C_2HF_2Br_3$ | 0.5–1.8 | | [Reserved] | |
| $C_2HF_3Br_2$ | 0.4–16 | | [Reserved] | |
| $C_2HF_4Br$ | 0.7–1.2 | | [Reserved] | |
| $C_2H_2FBr_3$ | 0.1–1.1 | | [Reserved] | |
| $C_2H_2F_2Br_2$ | 0.2–1.5 | | [Reserved] | |
| $C_2H_2F_3Br$ | 0.7–1.6 | | [Reserved] | |
| $C_2H_3FBr_2$ | 0.1–1.7 | | [Reserved] | |
| $C_2H_3F_2Br$ | 0.2–1.1 | | [Reserved] | |
| $C_2H_4FBr$ | 0.07–0.1 | | [Reserved] | |
| $C_3HFBr_6$ | 0.3–1.5 | | [Reserved] | |
| $C_3HF_2Br_5$ | 0.2–1.9 | | [Reserved] | |
| $C_3HF_3Br_4$ | 0.3–1.8 | | [Reserved] | |
| $C_3HF_4Br_3$ | 0.5–2.2 | | [Reserved] | |
| $C_3HF_5Br_2$ | 0.9–2.0 | | [Reserved] | |
| $C_3HF_6Br$ | 0.7–3.3 | | [Reserved] | |
| $C_3H_2FBr_5$ | 0.1–1.9 | | [Reserved] | |
| $C_3H_2F_2Br_4$ | 0.2–2.1 | | [Reserved] | |
| $C_3H_2F_3Br_3$ | 0.2–5.6 | | [Reserved] | |
| $C_3H_2F_4Br_2$ | 0.3–7.5 | | [Reserved] | |
| $C_3H_2F_5Br$ | 0.9–1.4 | | [Reserved] | |
| $C_3H_3FBR_4$ | 0.08–1.9 | | [Reserved] | |
| $C_3H_3F_2Br_3$ | 0.1–3.1 | | [Reserved] | |
| $C_3H_3F_3Br_2$ | 0.1–2.5 | | [Reserved] | |
| $C_3H_3F_4Br$ | 0.3–4.4 | | [Reserved] | |
| $C_3H_4FBr_3$ | 0.03–0.3 | | [Reserved] | |
| $C_3H_4F_2Br_2$ | 0.1–1.0 | | [Reserved] | |
| $C_3H_4F_3Br$ | 0.07–0.8 | | [Reserved] | |
| $C_3H_5FBr_2$ | 0.04–0.4 | | [Reserved] | |
| $C_3H_5F_2Br$ | 0.07–0.8 | | [Reserved] | |
| $C_3H_6FB$ | 0.02–0.7 | | [Reserved] | |
| 8. Group VIII: | | | | |
| $CH_2BrCl$ (Chlorobromomethane) | 0.12 | | [Reserved] | |
| B. Class II: | | | | |
| $CHFCl_2$-Dichlorofluoromethane (HCFC-21) | [Reserved] | 2.1 | 0.03 | 0.00 |
| $CHF_2$ Cl-Chlorodifluoromethane (HCFC-22) | 0.05 | 15.3 | 0.14 | 0.00 |
| $CH_2$ FCl-Chlorofluoromethane (HCFC-31) | [Reserved] | 1.44 | 0.02 | 0.00 |
| $C_2$ $HFCl_4$- (HCFC-121) | [Reserved] | 0.6 | 0.01 | 0.00 |
| $C_2$ $HF_2$ $Cl_3$- (HCFC-122) | [Reserved] | 1.4 | 0.02 | 0.00 |
| $C_2$ $HF_3$ $Cl_2$- (HCFC-123) | 0.02 | 1.6 | 0.016 | 0.00 |
| $C_2$ $HF_4$ Cl- (HCFC-124) | 0.02 | 6.6 | 0.04 | 0.00 |
| $C_2$ $H_2$ $FCl_3$- (HCFC-131) | [Reserved] | 4.0 | 0.06 | 0.00 |
| $C_2$ $H_2$ $F_2$ $Cl_2$- (HCFC-132b) | [Reserved] | 4.2 | 0.05 | 0.00 |
| $C_2$ $H_2$ $F_3$ Cl- (HCFC-133a) | [Reserved] | 4.8 | 0.03 | 0.00 |
| $C_2$ $H_3$ $FCl_2$- (HCFC-141b) | 0.12 | 7.8 | 0.10 | 0.00 |
| $C_2$ $H_3$ $F_2$ Cl- (HCFC-142b) | 0.06 | 19.1 | 0.14 | 0.00 |
| $C_3$ $HFCl_6$- (HCFC-221) | [Reserved] | | | 0.00 |
| $C_3$ $HF_2$ $Cl_5$- (HCFC-222) | [Reserved] | | | 0.00 |
| $C_3$ $HF_3$ $Cl_4$- (HCFC-223) | [Reserved] | | | 0.00 |
| $C_3$ $HF_4$ $Cl_3$- (HCFC-224) | [Reserved] | | | 0.00 |
| $C_3$ $HF_5$ $Cl_2$- (HCFC-225ca) | [Reserved] | 1.5 | 0.01 | 0.00 |
| | | −1.7 | | |
| (HCFC-225cb) | [Reserved] | 5.1 | 0.04 | 0.00 |
| $C_3$ $HF_6$ Cl- (HCFC-226) | [Reserved] | | | 0.00 |
| $C_3$ $H_2$ $FCl_5$- (HCFC-231) | [Reserved] | | | 0.00 |
| $C_3$ $H_2$ $F_{24}$- (HCFC-232) | [Reserved] | | | 0.00 |
| $C_3$ $H_2$ $F_3$ $Cl_3$- (HCFC-233) | [Reserved] | | | 0.00 |
| $C_3$ $H_2$ $F_4$ $Cl_2$- (HCFC-234) | [Reserved] | | | 0.00 |
| $C_3$ $H_2$ $F_5$ Cl- (HCFC-235) | [Reserved] | | | 0.00 |
| $C_3$ $H_3$ $FCl_4$- (HCFC-241) | [Reserved] | | | 0.00 |
| $C_3$ $H_3$ $F_2$ $Cl_3$- (HCFC-242) | [Reserved] | | | 0.00 |
| $C_3$ $H_3$ $F_3$ $Cl_2$- (HCFC-243) | [Reserved] | | | 0.00 |

| Controlled substance | ODP | AT L | CLP | BLP |
|---|---|---|---|---|
| $C_3 H_3 F_4 Cl$- (HCFC-244) | [Reserved] | | | 0.00 |
| $C_3 H_4 FCl_3$- (HCFC-251) | [Reserved] | | | 0.00 |
| $C_3 H_4 F_2 Cl_2$- (HCFC-252) | [Reserved] | | | 0.00 |
| $C_3 H_4 F_3 Cl$- (HCFC-253) | [Reserved] | | | 0.00 |
| $C_3 H_5 FCl_2$- (HCFC-261) | [Reserved] | | | 0.00 |
| $C_2 H_5 F_2 Cl$- (HCFC-262) | [Reserved] | | | 0.00 |
| $C_3 H_6 FCl$- (HCFC-271) | [Reserved] | | | 0.00 |
| All isomers of the above chemicals | [Reserved] | | | |

[60 FR 24986, May 10, 1995, as amended at 68 FR 42894, July 18, 2003]

## Appendix G to Subpart A of Part 82—UNEP Recommendations for Conditions Applied to Exemption for Essential Laboratory and Analytical Uses

1. Essential laboratory and analytical uses are identified at this time to include equipment calibration; use as extraction solvents, diluents, or carriers for chemical analysis; biochemical research; inert solvents for chemical reactions, as a carrier or laboratory chemical and other critical analytical and laboratory purposes. Pursuant to Decision XI/15 of the Parties to the Montreal Protocol, effective January 1, 2002 the following uses of class I controlled substances are not considered essential under the global laboratory exemption:

a. Testing of oil and grease and total petroleum hydrocarbons in water;

b. Testing of tar in road-paving materials; and

c. Forensic finger printing.

Production for essential laboratory and analytical purposes is authorized provided that these laboratory and analytical chemicals shall contain only controlled substances manufactured to the following purities:

CTC (reagent grade)—99.5
1,1,1,-trichloroethane—99.5
CFC-11—99.5
CFC-13—99.5
CFC-12—99.5
CFC-113—99.5
CFC-114—99.5
Other w/ Boiling P>20 degrees C—99.5
Other w/ Boiling P<20 degrees C—99.0

d. Testing of organic matter in coal.

2. These pure, controlled substances can be subsequently mixed by manufacturers, agents or distributors with other chemicals controlled or not controlled by the Montreal Protocol as is customary for laboratory and analytical uses.

3. These high purity substances and mixtures containing controlled substances shall be supplied only in re-closable containers or high pressure cylinders smaller than three litres or in 10 millilitre or smaller glass ampoules, marked clearly as substances that deplete the ozone layer, restricted to laboratory use and analytical purposes and specifying that used or surplus substances should be collected and recycled, if practical. The material should be destroyed if recycling is not practical.

4. Parties shall annually report for each controlled substance produced: the purity; the quantity; the application, specific test standard, or procedure requiring its uses; and the status of efforts to eliminate its use in each application. Parties shall also submit copies of published instructions, standards, specifications, and regulations requiring the use of the controlled substance.

5. Pursuant to Decision XVIII/15 of the Parties to the Montreal Protocol, methyl bromide is exempted for the following approved essential laboratory and analytical purposes listed in following items (a) through (d). Use of methyl bromide for field trials is not an approved use under the global laboratory and analytical use exemption. The provisions of Appendix G, paragraphs (1), (2), (3), and (4), regarding purity, mixing, container, and reporting requirements for other exempt ODSs, also apply to the use of methyl bromide under this exemption.

a. Methyl bromide is exempted as an approved essential laboratory and analytical use as a reference or standard to calibrate equipment which uses methyl bromide, to monitor methyl bromide emission levels, or to determine methyl bromide residue levels in goods, plants and commodities;

b. Methyl bromide is exempted as an approved essential laboratory and analytical when used in laboratory toxicological studies;

c. Methyl bromide is exempted as an approved essential laboratory and analytical use to compare the efficacy of methyl bromide and its alternatives inside a laboratory; and

d. Methyl bromide is exempted as an approved essential laboratory and analytical use as a laboratory agent which is destroyed in a chemical reaction in the manner of feedstock.

[60 FR 24986, May 10, 1995, as amended at 67 FR 6362, Feb. 11, 2002; 72 FR 73269, Dec. 27, 2007]

## APPENDIX H TO SUBPART A OF PART 82—CLEAN AIR ACT AMENDMENTS OF 1990 PHASEOUT SCHEDULE FOR PRODUCTION OF OZONE-DEPLETING SUBSTANCES

| Date | Carbon tetrachloride (percent) | Methyl chloroform (percent) | Other class substances (percent) |
|---|---|---|---|
| 1994 | 70 | 85 | 65 |
| 1995 | 15 | 70 | 50 |
| 1996 | 15 | 50 | 40 |
| 1997 | 15 | 50 | 15 |
| 1998 | 15 | 50 | 15 |
| 1999 | 15 | 50 | 15 |
| 2000 | ..... | 20 | |
| 2001 | ..... | 20 | |

## APPENDIX I TO SUBPART A OF PART 82—GLOBAL WARMING POTENTIALS (MASS BASIS), REFERENCED TO THE ABSOLUTE GWP FOR THE ADOPTED CARBON CYCLE MODEL $CO_2$ DECAY RESPONSE AND FUTURE $CO_2$ ATMOSPHERIC CONCENTRATIONS HELD CONSTANT AT CURRENT LEVELS. (ONLY DIRECT EFFECTS ARE CONSIDERED.)

| Species (chemical) | Chemical formula | Global warming potential (time horizon) | | |
|---|---|---|---|---|
| | | 20 years | 100 years | 500 years |
| CFC-11 | $CFCl_3$ | 5000 | 4000 | 1400 |
| CFC-12 | $CF_2 Cl_2$ | 7900 | 8500 | 4200 |
| CFC-13 | $CClF_3$ | 8100 | 11700 | 13600 |
| CFC-113 | $C_2 F_3 Cl_3$ | 5000 | 5000 | 2300 |
| CFC-114 | $C_2 F_4 Cl_2$ | 6900 | 9300 | 8300 |
| CFC-115 | $C_2 F_5 Cl$ | 6200 | 9300 | 13000 |
| H–1301 | $CF_3 Br$ | 6200 | 5600 | 2200 |
| Carbon Tet | $CCl_4$ | 2000 | 1400 | 500 |
| Methyl Chl | $CH_3 CCl_3$ | 360 | 110 | 35 |
| HCFC-22 | $CF_2 HCl$ | 4300 | 1700 | 520 |
| HCFC-141b | $C_2 FH_3 Cl_2$ | 1800 | 630 | 200 |
| HCFC-142b | $C_2 F_2 H_3 Cl$ | 4200 | 2000 | 630 |
| HCFC-123 | $C_2 F_3 HCl_2$ | 300 | 93 | 29 |
| HCFC-124 | $C_2 F_4 HCl$ | 1500 | 480 | 150 |
| HCFC-225ca | $C_3 F_5 HCl_2$ | 550 | 170 | 52 |
| HCFC-225cb | $C_3 F_5 HCl_2$ | 1700 | 530 | 170 |

AUnited Nations Environment Programme (UNEP), February 1995, Scientific Assessment of Ozone Depletion: 1994, Chapter 13, ''Ozone Depleting Potentials, Global Warming Potentials and Future Chlorine/Bromine Loading,'' and do not reflect review of scientific documents published after that date.

[61 FR 1285, Jan. 19, 1996]

## APPENDIX J TO SUBPART A OF PART 82—PARTIES TO THE MONTREAL PROTOCOL CLASSIED UNDER ARTICLE 5(1) THAT HAVE BANNED THE IMPORT OF CONTROLLED PRODUCTS THAT RELY ON CLASS I CONTROLLED SUBSTANCES FOR THEIR CONTINUING FUNCTIONING [RESERVED]

## APPENDIX K TO SUBPART A OF PART 82—COMMODITY CODES FROM THE HARMONIZED TARIFF SCHEDULE FOR CONTROLLED SUBSTANCES AND USED CONTROLLED SUBSTANCES

| Description of commodity or chemical | Commodity code from harmonized tariff schedule |
|---|---|
| CFC-11 | 2903.41.0000 |
| CFC-12 | 2903.42.0000 |
| CFC-113 | 2903.43.0000 |
| CFC-114 | 2903.44.0010 |
| CFC-115 | 2903.44.0020 |
| HALONS | 2903.46.0000 |
| CFC-13, CFC-111, CFC-112, CFC-211, CFC-212, CFC-213, CFC-214, CFC-215, CFC-216, CFC-217 | 2903.45.0000 |
| HCFC-22 | 2903.49.9010 |
| HCFC-21, HCFC-31, HCFC-123, HCFC-124, HCFC-133, HCFC-141b, HCFC-142b, HCFC-225 | 2903.49.0000 |
| OTHER, HALOGENATED | 2903.49.9060 |
| MIXTURES (R–500, R–502, ETC.) | 3824.71.0000 |
| MIXTURES, OTHER | 3824.79.0000 |

| Description of commodity or chemical | Commodity code from harmonized tariff schedule |
|---|---|
| CARBON TETRACHLORIDE | 2903.14.0000 |
| METHYL CHLOROFORM | 2903.19.6010 |
| METHYL BROMIDE | 2903.30.1520 |

[63 FR 41651, Aug. 4, 1998]

APPENDIX L TO SUBPART A OF PART 82—APPROVED CRITICAL USES AND LIMITING CRITICAL CONDITIONS FOR THOSE USES FOR THE 2010 CONTROL PERIOD

| Approved critical uses | Approved critical user and location of use | Limiting critical conditions that exist, or that the approved critical user reasonably expects could arise without methyl bromide fumigation |
|---|---|---|
| Column A | Column B | Column C |
| | **PRE-PLANT USES** | |
| Cucurbits | (a) Growers in Delaware, Maryland, and Michigan .. | Moderate to severe soilborne disease infestation.<br>Moderate to severe yellow or purple nutsedge infestation. |
| | (b) Growers in Georgia and Southeastern U.S. limited to growing locations in Alabama, Arkansas, Kentucky, Louisiana, North Carolina, South Carolina, Tennessee, and Virginia. | Moderate to severe soilborne disease infestation.<br>Moderate to severe root knot nematode infestation. |
| Eggplant | (a) Florida growers ..... | Moderate to severe yellow or purple nutsedge infestation.<br>Moderate to severe soilborne disease infestation.<br>Restrictions on alternatives due to karst topographical features and soils not supporting seepage irrigation. |
| | (b) Georgia growers ..... | Moderate to severe yellow or purple nutsedge infestation.<br>Moderate to severe nematode infestation.<br>Moderate to severe pythium collar, crown and root rot.<br>Moderate to severe southern blight infestation.<br>Restrictions on alternatives due to karst topographical features. |
| | (c) Michigan growers ..... | Moderate to severe soilborne disease infestation. |
| Forest Nursery Seedlings | (a) Growers in Alabama, Arkansas, Georgia, Louisiana, Mississippi, North Carolina, Oklahoma, South Carolina, Tennessee, Texas, and Virginia. | Moderate to severe yellow or purple nutsedge infestation.<br>Moderate to severe soilborne disease infestation.<br>Moderate to severe nematode infestation. |
| | (b) International Paper and its subsidiaries limited to growing locations in Alabama, Arkansas, Georgia, South Carolina, and Texas. | Moderate to severe yellow or purple nutsedge infestation.<br>Moderate to severe soilborne disease infestation. |
| | (c) Government-owned seedling nurseries in Illinois, Indiana, Kentucky, Maryland, Missouri, New Jersey, Ohio, Pennsylvania, West Virginia, and Wisconsin. | Moderate to severe weed infestation including purple and yellow nutsedge infestation.<br>Moderate to severe Canada thistle infestation.<br>Moderate to severe nematode infestation.<br>Moderate to severe soilborne disease infestation. |
| | (d) Weyerhaeuser Company and its subsidiaries limited to growing locations in Alabama, Arkansas, North Carolina, and South Carolina. | Moderate to severe yellow or purple nutsedge infestation.<br>Moderate to severe soilborne disease infestation.<br>Moderate to severe nematode or worm infestation. |
| | (e) Weyerhaeuser Company and its subsidiaries limited to growing locations in Oregon and Washington. | Moderate to severe yellow nutsedge infestation.<br>Moderate to severe soilborne disease infestation. |
| | (f) Michigan growers ..... | Moderate to severe soilborne disease infestation.<br>Moderate to severe Canada thistle infestation.<br>Moderate to severe nutsedge infestation.<br>Moderate to severe nematode infestation. |

| | | |
|---|---|---|
| Orchard Nursery Seedlings | (a) Members of the Western Raspberry Nursery Consortium limited to growing locations in Washington, and members of the California Association of Nursery and Garden Centers representing Deciduous Tree Fruit Growers. | Moderate to severe nematode infestation.<br>Medium to heavy clay soils.<br>Local township limits prohibiting 1,3-dichloropropene. |
| | (b) California rose nurseries | Moderate to severe nematode infestation.<br>Local township limits prohibiting 1,3-dichloropropene. |
| Orchard Replant | (a) California stone fruit, table and raisin grape, wine grape, walnut, and almond growers. | Moderate to severe nematode infestation.<br>Moderate to severe soilborne disease infestation.<br>Replanted orchard soils to prevent orchard replant disease.<br>Medium to heavy soils.<br>Local township limits prohibiting 1,3-dichloropropene. |
| Ornamentals | (a) California growers | Moderate to severe soilborne disease infestation.<br>Moderate to severe nematode infestation.<br>Local township limits prohibiting 1,3-dichloropropene. |
| | (b) Florida growers | Moderate to severe weed infestation.<br>Moderate to severe soilborne disease infestation.<br>Moderate to severe nematode infestation.<br>Restrictions on alternatives due to karst topographical features and soils not supporting seepage irrigation. |
| | (c) Michigan herbaceous perennial growers | Moderate to severe nematode infestation.<br>Moderate to severe soilborne disease infestation.<br>Moderate to severe yellow nutsedge and other weed infestation. |
| | (d) New York growers | Moderate to severe soilborne disease infestation.<br>Moderate to severe nematode infestation. |
| Peppers | (a) Alabama, Arkansas, Kentucky, Louisiana, North Carolina, South Carolina, Tennessee, and Virginia growers. | Moderate to severe yellow or purple nutsedge infestation.<br>Moderate to severe nematode infestation.<br>Moderate to severe pythium root, collar, crown and root rots. |
| | (b) Florida growers | Moderate to severe yellow or purple nutsedge infestation.<br>Moderate to severe soilborne disease infestation.<br>Moderate to severe nematode infestation.<br>Restrictions on alternatives due to karst topographical features and soils not supporting seepage irrigation. |
| | (c) Georgia growers | Moderate to severe yellow or purple nutsedge infestation.<br>Moderate to severe nematode infestation, or moderate to severe pythium root and collar rots.<br>Moderate to severe southern blight infestation, crown or root rot.<br>Restrictions on alternatives due to karst topographical features. |
| | (d) Michigan growers | Moderate to severe soilborne disease infestation. |
| Strawberry Fruit | (a) California growers | Moderate to severe black root rot or crown rot.<br>Moderate to severe yellow or purple nutsedge infestation.<br>Moderate to severe nematode infestation.<br>Local township limits prohibiting 1,3-dichloropropene.<br>Time to transition to an alternative. |

| Approved critical uses | Approved critical user and location of use | Limiting critical conditions that exist, or that the approved critical user reasonably expects could arise without methyl bromide fumigation |
|---|---|---|
| Column A | Column B | Column C |
| | (b) Florida growers | Moderate to severe yellow or purple nutsedge infestation.<br>Moderate to severe nematode infestation.<br>Moderate to severe soilborne disease infestation.<br>Carolina geranium or cut-leaf evening primrose infestation.<br>Restrictions on alternatives due to karst topographical features and soils not supporting seepage irrigation. |
| | (c) Alabama, Arkansas, Georgia, Illinois, Kentucky, Louisiana, Maryland, Mississippi, Missouri, New Jersey, North Carolina, Ohio, South Carolina, Tennessee, and Virginia growers. | Moderate to severe yellow or purple nutsedge infestation.<br>Moderate to severe nematode infestation.<br>Moderate to severe black root and crown rot. |
| Strawberry Nurseries | (a) California growers | Moderate to severe soilborne disease infestation.<br>Moderate to severe yellow or purple nutsedge infestation.<br>Moderate to severe nematode infestation. |
| | (b) North Carolina and Tennessee growers | Moderate to severe black root rot.<br>Moderate to severe root-knot nematode infestation.<br>Moderate to severe yellow and purple nutsedge infestation. |
| Sweet Potato Slips | (a) California growers | Local township limits prohibiting 1,3-dichloropropene. |
| Tomatoes | (a) Michigan growers | Moderate to severe soilborne disease infestation.<br>Moderate to severe fungal pathogen infestation. |
| | (b) Alabama, Arkansas, Florida, Georgia, Kentucky, Louisiana, Mississippi, North Carolina, South Carolina, Tennessee, and Virginia growers. | Moderate to severe yellow or purple nutsedge infestation.<br>Moderate to severe soilborne disease infestation.<br>Moderate to severe nematode infestation.<br>Restrictions on alternatives due to karst topographical features and, in Florida, soils not supporting seepage irrigation. |
| | (c) Maryland growers | Moderate to severe fungal pathogen infestation. |
| **POST-HARVEST USES** | | |
| Food Processing | (a) Rice millers in the U.S. who are members of the USA Rice Millers Association. | Moderate to severe beetle, weevil, or moth infestation.<br>Presence of sensitive electronic equipment subject to corrosion.<br>Time to transition to an alternative. |
| | (b) Pet food manufacturing facilities in the U.S. who are members of the Pet Food Institute. | Moderate to severe beetle, moth, or cockroach infestation.<br>Presence of sensitive electronic equipment subject to corrosion.<br>Time to transition to an alternative. |
| | (c) Members of the North American Millers' Association in the U.S. | Moderate to severe beetle infestation.<br>Presence of sensitive electronic equipment subject to corrosion.<br>Time to transition to an alternative. |

| | | |
|---|---|---|
| | (d) Members of the National Pest Management Association treating processed food, cheese, herbs and spices, and spaces and equipment in associated processing and storage facilities. | Moderate to severe beetle or moth infestation.<br>Presence of sensitive electronic equipment subject to corrosion.<br>Time to transition to an alternative. |
| Commodities | (a) California entities storing walnuts, beans, dried plums, figs, raisins, and dates (in Riverside county only) in California. | Rapid fumigation required to meet a critical market window, such as during the holiday season. |
| Dry Cured Pork Products | (a) Members of the National Country Ham Association and the Association of Meat Processors, Nahunta Pork Center (North Carolina), and Gwaltney and Smithfield Inc. | Red legged ham beetle infestation.<br>Cheese/ham skipper infestation.<br>Dermested beetle infestation.<br>Ham mite infestation. |

[75 FR 23184, May 3, 2010]

## Subpart B—Servicing of Motor Vehicle Air Conditioners

SOURCE: 57 FR 31261, July 14, 1992, unless otherwise noted.

### § 82.30 Purpose and scope.

(a) The purpose of the regulations in this subpart B is to implement section 609 of the Clean Air Act, as amended (Act) regarding the servicing of motor vehicle air conditioners (MVACs), and to implement section 608 of the Act regarding certain servicing, maintenance, repair and disposal of air conditioners in MVACs and MVAC-like appliances (as that term is defined in 40 CFR 82.152).

(b) These regulations apply to any person performing service on a motor vehicle for consideration when this service involves the refrigerant in the motor vehicle air conditioner.

[57 FR 31261, July 14, 1992, as amended at 62 FR 68046, Dec. 30, 1997]

### § 82.32 Definitions.

(a) *Approved independent standards testing organization* means any organization which has applied for and received approval from the Administrator pursuant to § 82.38.

(b) *Approved refrigerant recycling equipment* means equipment certified by the Administrator or an organization approved under § 82.38 as meeting either one of the standards in § 82.36. Such equipment extracts and recycles refrigerant or extracts refrigerant for recycling on-site or reclamation off-site.

(c) *Motor vehicle* as used in this subpart means any vehicle which is self-propelled and designed for transporting persons or property on a street or highway, including but not limited to passenger cars, light duty vehicles, and heavy duty vehicles. This definition does not include a vehicle where final assembly of the vehicle has not been completed by the original equipment manufacturer.

(d) *Motor vehicle air conditioners* means mechanical vapor compression refrigeration equipment used to cool the driver's or passenger's compartment of any motor vehicle. This definition is not intended to encompass the hermetically sealed refrigeration systems used on motor vehicles for refrigerated cargo and the air conditioning systems on passenger buses using HCFC-22 refrigerant.

(e) *Properly using.* (1) Properly using means using equipment in conformity with the regulations set forth in this subpart, including but not limited to the prohibitions and required practices set forth in § 82.34, and the recommended service procedures and practices for the containment of refrigerant set forth in appendices A, B, C, D, E, and F of this subpart, as applicable. In addition, this term includes operating the equipment in accordance with the manufacturer's guide to operation and maintenance and using the equipment only for the controlled substance for which the machine is designed. For equipment that extracts and recycles refrigerant, properly using also means to recycle refrigerant before it is returned to a motor vehicle air conditioner or MVAC-like appliance, including to the motor vehicle air conditioner or MVAC-like appliance from which the refrigerant was extracted. For equipment that only recovers refrigerant, properly using includes the requirement to recycle the refrigerant on-site or send the refrigerant off-site for reclamation.

(2) Refrigerant from reclamation facilities that is used for the purpose of recharging motor vehicle air conditioners must be at or above the standard of purity developed by the Air-conditioning and Refrigeration Institute (ARI 700–93) (which is codified at 40 CFR part 82, subpart F, appendix A, and is available at 4301 North Fairfax Drive, Suite 425, Arlington, Virginia 22203). Refrigerant may be recycled off-site only if the refrigerant is extracted using recover only equipment, and is subsequently recycled off-site by equipment owned by the person that owns both the recover only equipment and owns or operates the establishment at which the refrigerant was extracted. In any event, approved equipment must be used to extract refrigerant prior to performing any service during which discharge of refrigerant from the motor vehicle air conditioner can reasonably be expected. Intentionally venting or

disposing of refrigerant to the atmosphere is an improper use of equipment.

(3) Notwithstanding any other terms of this paragraph (e), approved refrigerant recycling equipment may be transported off-site and used to perform service involving refrigerant at other locations where such servicing occurs. Any such servicing involving refrigerant must meet all of the requirements of this subpart B that would apply if the servicing occurred on-site.

(4) Facilities that charge MVACs or MVAC-like appliances with refrigerant but do not perform any other service involving refrigerant (*i.e.*, perform ''top-offs'' only) are considered to be engaged in ''service involving refrigerant'' and are therefore subject to any and all requirements of this subsection that apply to facilities that perform a wider range of refrigerant servicing. For facilities that charge MVACs, this includes the requirement to purchase approved refrigerant recycling equipment. For facilities that only charge MVAC-like appliances, this does not include the requirement to purchase approved refrigerant recycling equipment, but does include the requirement to be properly trained and certified by a technician certification program approved by the Administrator pursuant to either § 82.40 or § 82.161(a)(5).

(5) All persons opening (as that term is defined in § 82.152) MVAC-like appliances must have at least one piece of approved recovery or recycling equipment available at their place of business.

(f) *Refrigerant* means any class I or class II substance used in a motor vehicle air conditioner. Class I and class II substances are listed in part 82, subpart A, appendix A. Effective November 15, 1995, refrigerant shall also include any substitute substance.

(g) *Service for consideration* means being paid to perform service, whether it is in cash, credit, goods, or services. This includes all service except that done for free.

(h) *Service involving refrigerant* means any service during which discharge or release of refrigerant from the MVAC or MVAC-like appliance to the atmosphere can reasonably be expected to occur. Service involving refrigerant includes any service in which an MVAC or MVAC-like appliance is charged with refrigerant but no other service involving refrigerant is performed (*i.e.*, a ''top-off'').

(i) *Motor vehicle disposal facility* means any commercial facility that engages in the disposal (which includes dismantling, crushing or recycling) of MVACs or MVAC-like appliances, including but not limited to automotive recycling facilities, scrap yards, landfills and salvage yards engaged in such operations. Motor vehicle repair and/or servicing facilities, including collision repair facilities, are not considered motor vehicle disposal facilities.

[57 FR 31261, July 14, 1992, as amended at 60 FR 21687, May 2, 1995; 62 FR 68046, Dec. 30, 1997]

### § 82.34 Prohibitions and required practices.

(a) No person repairing or servicing MVACs for consideration, and no person repairing or servicing MVAC-like appliances, may perform any service involving the refrigerant for such MVAC or MVAC-like appliance:

(1) Without properly using equipment approved pursuant to § 82.36;

(2) Unless any such person repairing or servicing an MVAC has been properly trained and certified by a technician certification program approved by the Administrator pursuant to § 82.40; and

(3) Unless any such person repairing or servicing an MVAC-like appliance has been properly trained and certified by a technician certification program approved by the Administrator pursuant to either § 82.40 or § 82.161(a)(5).

(b) Effective November 15, 1992, no person may sell or distribute, or offer for sale or distribution, any class I or class II substance that is suitable for use as a refrigerant in motor vehicle air-conditioner and that is in a container which contains less than 20 pounds of such refrigerant to any person unless that person is properly trained and certified under § 82.40 or intended the containers for resale only, and so certifies to the seller under § 82.42(b)(3).

(c) No technician training programs may issue certificates unless the program complies with all of the standards in § 82.40(a).

(d) *Motor vehicle disposal facilities.* (1) Any refrigerant that is extracted from an MVAC or an MVAC-like appliance (as that term is defined in § 82.152) bound for disposal and located at a motor vehicle disposal facility may not be subsequently used to charge or recharge an MVAC or MVAC-like appliance, unless, prior to such charging or recharging, the refrigerant is either:

(i) Recovered, and reclaimed in accordance with the regulations promulgated under § 82.32(e)(2) of this subpart B; or

(ii) (A) Recovered using approved refrigerant recycling equipment dedicated for use with MVACs and MVAC-like appliances, either by a technician certified under paragraph (a)(2) of this section, or by an employee, owner, or operator of, or contractor to, the disposal facility; and

(B) Subsequently recycled by the facility that charges or recharges the refrigerant into an MVAC or MVAC-like appliance, properly using approved refrigerant recycling equipment in accordance with any applicable recommended service procedures set forth in the appendices to this subpart B.

(2) Any refrigerant the sale of which is restricted under subpart F that is extracted from an MVAC or an MVAC-like appliance bound for disposal and located at a motor vehicle disposal facility but not subsequently reclaimed in accordance with the regulations promulgated under subpart F, may be sold prior to its subsequent re-use only to a technician certified under paragraph (a)(2) of this section. Any technician certified under paragraph (a)(2) of this section who obtains such a refrigerant may subsequently re-use such refrigerant only in an MVAC or MVAC-like appliance, and only if it has been reclaimed or properly recycled.

(e) Refrigerant handling equipment manufactured or imported for use during the maintenance, service or repair of MVACs for consideration cannot be introduced into interstate commerce unless meeting the requirements of § 82.36.

[57 FR 31261, July 14, 1992, as amended at 62 FR 68047, Dec. 30, 1997; 72 FR 63494, Nov. 9, 2007]

### § 82.36 Approved refrigerant handling equipment.

(a)(1) Refrigerant recycling equipment must be certified by the Administrator or an independent standards testing organization approved by the Administrator under § 82.38 to meet the following standard:

(2) Equipment that recovers and recycles CFC-12 refrigerant must meet the standards set forth in appendix A of this subpart (Recommended Service Procedure for the Containment of CFC-12, Extraction and Recycle Equipment for Mobile Automotive Air-Conditioning Systems, and Standard of Purity for Use in Mobile Air Conditioning Systems).

(3) Equipment that recovers but does not recycle CFC-12 refrigerant must meet the standards set forth in appendix B of this subpart (Recommended Service Procedure for the Containment of CFC-12 and Extraction Equipment for Mobile Automotive Air-Conditioning Systems).

(4) Effective January 1, 2008, equipment that recovers and recycles HFC–134a refrigerant and equipment that recovers and recycles HFC–134a refrigerant and recharges systems with HFC–134a refrigerant must meet the standards set forth in Appendix C of this subpart based upon J2788—HFC–134a (R–134a) Recovery/Recycling Equipment and Recovery/Recycling/Recharging for Mobile Air-Conditioning Systems.

(5) Effective October 31, 2008, equipment that recovers but does not recycle HFC–134a refrigerant must meet the standards set forth in Appendix D of this subpart based upon J2810—HFC–134a (R–134a) Recovery Equipment Mobile Air-Conditioning Systems.

(6) Equipment that recovers and recycles both CFC-12 and HFC-134a using common circuitry must meet the standards set forth in appendix E of this subpart (Automotive Refrigerant Recycling Equipment Intended for Use with both CFC-12 and HFC-134a, Recommended Service Procedure for the

Containment of CFC-12, and Recommended Service Procedure for the Containment of HFC-134a).

(7) Equipment that recovers but does not recycle refrigerants other than HFC-134a and CFC-12 must meet the standards set forth in appendix F of this subpart (Recover-Only Equipment that Extracts a Single, Specific Refrigerant Other Than CFC-12 or HFC-134a).

(b)(1) Refrigerant recycling equipment that has not been certified under paragraph (a) of this section shall be considered approved if it is substantially identical to the applicable equipment certified under paragraph (a) of this section, and:

(i) For equipment that recovers and recycles CFC-12 refrigerant, it was initially purchased before September 4, 1991;

(ii) For equipment that recovers but does not recycle CFC-12 refrigerant, it was initially purchased before April 22, 1992;

(iii) For equipment that recovers and recycles HFC-134a refrigerant, it was initially purchased before March 6, 1996;

(iv) For equipment that recovers but does not recycle HFC-134a refrigerant, it was initially purchased before March 6, 1996;

(v) For equipment that recovers but does not recycle any single, specific refrigerant other than CFC-12 or HFC-134a, it was initially purchased before March 6, 1996; and

(vi) For equipment that recovers and recycles HFC-134a and CFC-12 refrigerant using common circuitry, it was initially purchased before March 6, 1996.

(2) Equipment manufacturers or owners may request a determination by the Administrator by submitting an application and supporting documents that indicate that the equipment is substantially identical to approved equipment to: MVACs Recycling Program Manager, Stratospheric Protection Division (6205J), U.S. Environmental Protection Agency, 1200 Pennsylvania Ave., NW., Washington, DC 20460, Attn: Substantially Identical Equipment Review. Supporting documents must include process flow sheets, lists of components and any other information that would indicate that the equipment is capable of processing the refrigerant to the standards in appendix A, B, C, D, E or F of this subpart, as applicable. Authorized representatives of the Administrator may inspect equipment for which approval is being sought and request samples of refrigerant that has been extracted and/or recycled using the equipment. Equipment that fails to meet appropriate standards will not be considered approved.

(3) Refrigerant recycling equipment that recovers or recovers and recycles CFC-12 refrigerant and has not been certified under paragraph (a) or approved under paragraphs(b)(1) and (b)(2) of this section shall be considered approved for use with an MVAC-like appliance if it was manufactured or imported before November 15, 1993, and is capable of reducing the system pressure to 102 mm of mercury vacuum under the conditions set forth in appendix A of this subpart.

(c) The Administrator will maintain a list of approved equipment by manufacturer and model. Persons interested in obtaining a copy of the list should send written inquiries to the address in paragraph (b) of this section.

[57 FR 31261, July 14, 1992, as amended at 60 FR 21687, May 2, 1995; 62 FR 68047, Dec. 30, 1997; 72 FR 63494, Nov. 9, 2007; 73 FR 34647, June 18, 2008]

### § 82.38 Approved independent standards testing organizations.

(a) Any independent standards testing organization may apply for approval by the Administrator to certify equipment as meeting the standards in appendix A, B, C, D, E, or F of this subpart, as applicable. The application shall be sent to: MVACs Recycling Program Manager, Stratospheric Protection Division (6205J), U.S. Environmental Protection Agency, 1200 Pennsylvania Ave., NW., Washington, DC 20460.

(b) Applications for approval must document the following:

(1) That the organization has the capacity to accurately test whether refrigerant recycling equipment complies with the applicable standards. In particular, applications must document:

(i) The equipment present at the organization that will be used for equipment testing;

(ii) The expertise in equipment testing and the technical experience of the organization's personnel;

(iii) Thorough knowledge of the standards as they appear in the applicable appendices of this subpart; and

(iv) The test procedures to be used to test equipment for compliance with applicable standards, and why such test procedures are appropriate for that purpose.

(2) That the organization has no conflict of interest and will receive no financial benefit based on the outcome of certification testing; and

(3) That the organization agrees to allow the Administrator access to verify the information contained in the application.

(c) If approval is denied under this section, the Administrator shall give written notice to the organization setting forth the basis for his or her determination.

(d) If at any time an approved independent standards testing organization is found to be conducting certification tests for the purposes of this subpart in a manner not consistent with the representations made in its application for approval under this section, the Administrator reserves the right to revoke approval.

[57 FR 31261, July 14, 1992, as amended at 60 FR 21687, May 2, 1995; 62 FR 68048, Dec. 30, 1997]

### § 82.40 Technician training and certification.

(a) Any technician training and certification program may apply for approval, in accordance with the provisions of this paragraph, by submitting to the Administrator at the address in § 82.38(a) verification that the program meets all of the following standards:

(1) *Training.* Each program must provide adequate training, through one or more of the following means: on-the-job training, training through self-study of instructional material, or on-site training involving instructors, videos or a hands-on demonstration.

(2) *Test subject material.* The certification tests must adequately and sufficiently cover the following:

(i) The standards established for the service and repair of MVACs and MVAC-like appliances as set forth in appendices A, B, C, D, E, and F of this subpart. These standards relate to the recommended service procedures for the containment of refrigerant, extraction equipment, extraction and recycle equipment, and the standard of purity for refrigerant in motor vehicle air conditioners.

(ii) Anticipated future technological developments, such as the introduction of HFC-134a in new motor vehicle air conditioners.

(iii) The environmental consequences of refrigerant release and the adverse effects of stratospheric ozone layer depletion.

(iv) As of August 13, 1992, the requirements imposed by the Administrator under section 609 of the Act.

(3) *Test administration.* Completed tests must be graded by an entity or individual who receives no benefit based on the outcome of testing; a fee may be charged for grading. Sufficient measures must be taken at the test site to ensure that tests are completed honestly by each technician. Each test must provide a means of verifying the identification of the individual taking the test. Programs are encouraged to make provisions for non-English speaking technicians by providing tests in other languages or allowing the use of a translator when taking the test. If a translator is used, the certificate received must indicate that translator assistance was required.

(4) *Proof of certification.* Each certification program must offer individual proof of certification, such as a certificate, wallet-sized card, or display card, upon successful completion of the test. Each certification program must provide a unique number for each certified technician.

(b) In deciding whether to approve an application, the Administrator will consider the extent to which the applicant has documented that its program meets the standards set forth in this section. The Administrator reserves the right to consider other factors deemed relevant to ensure the effectiveness of certification programs. The Administrator may approve a program which meets all of the standards in paragraph (a) of this section except test administration if the program, when viewed as a whole, is at least as

effective as a program that does meet all the standards. Such approval shall be limited to training and certification conducted before August 13, 1992. If approval is denied under this section, the Administrator shall give written notice to the program setting forth the basis for his determination.

(c) *Technical revisions.* Directors of approved certification programs must conduct periodic reviews of test subject material and update the material based upon the latest technological developments in motor vehicle air conditioner service and repair. A written summary of the review and any changes made must be submitted to the Administrator every two years.

(d) *Recertification.* The Administrator reserves the right to specify the need for technician recertification at some future date, if necessary.

(e) If at any time an approved program is conducted in a manner not consistent with the representations made in the application for approval of the program under this section, the Administrator reserves the right to revoke approval.

(f) Authorized representatives of the Administrator may require technicians to demonstrate on the business entity's premises their ability to perform proper procedures for recovering and/or recycling refrigerant. Failure to demonstrate or failure to properly use the equipment may result in revocation of the technician's certificate by the Administrator. Technicians whose certification is revoked must be recertified before servicing or repairing any motor vehicle air conditioners.

[57 FR 31261, July 14, 1992, as amended at 60 FR 21688, May 2, 1995; 62 FR 68048, Dec. 30, 1997]

### § 82.42 Certification, recordkeeping and public notification requirements.

(a) *Certification requirements.* (1) No later than January 1, 1993, any person repairing or servicing motor vehicle air conditioners for consideration shall certify to the Administrator that such person has acquired, and is properly using, approved equipment and that each individual authorized to use the equipment is properly trained and certified. Certification shall take the form of a statement signed by the owner of the equipment or another responsible officer and setting forth:

(i) The name of the purchaser of the equipment;

(ii) The address of the establishment where the equipment will be located; and

(iii) The manufacturer name and equipment model number, the date of manufacture, and the serial number of the equipment. The certification must also include a statement that the equipment will be properly used in servicing motor vehicle air conditioners, that each individual authorized by the purchaser to perform service is properly trained and certified in accordance with § 82.40, and that the information given is true and correct.

(A) Owners or lessees of recycling or recovery equipment having their places of business in Connecticut, Maine, Massachusetts, New Hampshire, Rhode Island, Vermont must send their certifications to: CAA section 609 Enforcement Contact; EPA Region I; Mail Code SEA; JFK Federal Building; One Congress Street, Suite 1100; Boston, MA 02114–2023.

(B) Owners or lessees of recycling or recovery equipment having their places of business in New York, New Jersey, Puerto Rico, Virgin Islands must send their certifications to: CAA section 609 Enforcement Contact; EPA Region II (2DECA–AC); 290 Broadway, 21st Floor; New York, NY 10007–1866.

(C) Owners or lessees of recycling or recovery equipment having their places of business in Delaware, District of Columbia, Maryland, Pennsylvania, Virginia, West Virginia must send their certifications to: CAA section 609 Enforcement Contact; EPA Region III—Wheeling Operations Office; Mail Code 3AP12; 303 Methodist Building; 11th and Chapline Streets; Wheeling, WV 26003.

(D) Owners or lessees of recycling or recovery equipment having their places of business in Alabama, Florida, Georgia, Kentucky, Mississippi, North Carolina, South Carolina, Tennessee must send their certifications to: CAA section 609 Enforcement Contact; EPA Region IV (APT–AE); Atlanta Federal Center; 61 Forsyth Street, SW.; Atlanta, GA 30303.

(E) Owners or lessees of recycling or recovery equipment having their places of business in Illinois, Indiana, Michigan, Minnesota, Ohio, Wisconsin must send their certifications to: CAA section 609 Enforcement Contact, EPA Region V (AE17J); 77 West Jackson Blvd.; Chicago, IL 60604–3507.

(F) Owners or lessees of recycling or recovery equipment having their places of business in Arkansas, Louisiana, New Mexico, Oklahoma, Texas must send their certifications to: CAA section 609 Enforcement Contact; EPA Region VI (6EN–AA); 1445 Ross Avenue, Suite 1200; Dallas, Texas 75202.

(G) Owners or lessees of recycling or recovery equipment having their places of business in Iowa, Kansas, Missouri, Nebraska must send their certifications to: CAA section 609 Enforcement Contact; EPA Region VII; Mail Code APCO/ARTD; 901 North 5th Street; Kansas City, KS 66101.

(H) Owners or lessees of recycling or recovery equipment having their places of business in Colorado, Montana, North Dakota, South Dakota, Utah, Wyoming must send their certifications to: CAA section 609 Enforcement Contact, EPA Region VIII, Mail Code 8ENF–T, 999 18th Street, Suite 500, Denver, CO 80202–2466.

(I) Owners or lessees of recycling or recovery equipment having their places of business in American Samoa, Arizona, California, Guam, Hawaii, Nevada must send their certifications to: CAA section 609 Enforcement Contact; EPA Region IX; Mail Code AIR–5; 75 Hawthorne Street; San Francisco, CA 94105.

(J) Owners or lessees of recycling or recovery equipment having their places of business in Alaska, Idaho, Oregon, Washington must send their certifications to: CAA section 609 Enforcement Contact; EPA Region X (OAQ–107); 1200 Sixth Avenue; Seattle, WA 98101.

(b) *Recordkeeping requirements.* (1) Any person who owns approved refrigerant recycling equipment certified under § 82.36(a)(2) must maintain records of the name and address of any facility to which refrigerant is sent.

(2) Any person who owns approved refrigerant recycling equipment must retain records demonstrating that all persons authorized to operate the equipment are currently certified under § 82.40.

(3) Any person who sells or distributes any class I or class II substance that is suitable for use as a refrigerant in a motor vehicle air conditioner and that is in a container of less than 20 pounds of such refrigerant must verify that the purchaser is properly trained and certified under § 82.40. The seller must have a reasonable basis for believing that the information presented by the purchaser is accurate. The only exception to these requirements is if the purchaser is purchasing the small containers for resale only. In this case, the seller must obtain a written statement from the purchaser that the containers are for resale only and indicate the purchasers name and business address. Records required under this paragraph must be retained for a period of three years.

(4) All records required to be maintained pursuant to this section must be kept for a minimum of three years unless otherwise indicated. Entities which service motor vehicle air conditioners for consideration must keep these records on-site.

(5) All entities which service motor vehicle air conditioners for consideration must allow an authorized representative of the Administrator entry onto their premises (upon presentation of his or her credentials) and give the authorized representative access to all records required to be maintained pursuant to this section.

(c) *Public notification.* Any person who conducts any retail sales of a class I or class II substance that is suitable for use as a refrigerant in a motor vehicle air conditioner, and that is in a container of less than 20 pounds of refrigerant, must prominently display a sign where sales of such containers occur which states:

"It is a violation of federal law to sell containers of Class I and Class II refrigerant of less than 20 pounds of such refrigerant to anyone who is not properly trained and certified to operate approved refrigerant recycling equipment."

[57 FR 31261, July 14, 1992, as amended at 60 FR 21688, May 2, 1995; 72 FR 63494, Nov. 9, 2007]

## APPENDIX A TO SUBPART B OF PART 82—STANDARD FOR RECYCLE/RECOVER EQUIPMENT

### STANDARD OF PURITY FOR USE IN MOBILE AIR-CONDITIONING SYSTEMS

*Foreword*

Due to the CFC's damaging effect on the ozone layer, recycle of CFC-12 (R–12) used in mobile air-conditioning systems is required to reduce system venting during normal service operations. Establishing recycle specifications for R–12 will assure that system operation with recycled R–12 will provide the same level of performance as new refrigerant.

Extensive field testing with the EPA and the auto industry indicate that reuse of R–12 removed from mobile air-conditioning systems can be considered, if the refrigerant is cleaned to a specific standard. The purpose of this standard is to establish the specific minimum levels of R–12 purity required for recycled R–12 removed from mobile automotive air-conditioning systems.

*1. Scope*

This information applies to refrigerant used to service automobiles, light trucks, and other vehicles with similar CFC-12 systems. Systems used on mobile vehicles for refrigerated cargo that have hermetically sealed, rigid pipe are not covered in this document.

*2. References*

SAE J1989, Recommended Service Procedure for the Containment of R–12
SAE J1990, Extraction and Recycle Equipment for Mobile Automotive Air-Conditioning Systems
ARI Standard 700–88

*3. Purity Specification*

The refrigerant in this document shall have been directly removed from, and intended to be returned to, a mobile air-conditioning system. The contaminants in this recycled refrigerant 12 shall be limited to moisture, refrigerant oil, and noncondensable gases, which shall not exceed the following level:

3.1 *Moisture:* 15 ppm by weight.

3.2 *Refrigerant Oil:* 4000 ppm by weight.

3.3 *Noncondensable Gases (air):* 330 ppm by wright.

*4. Refrigeration Recycle Equipment Used in Direct Mobile Air-Conditioning Service Operations Requirement*

4.1 The equipment shall meet SAE J1990, which covers additional moisture, acid, and filter requirements.

4.2 The equipment shall have a label indicating that it is certified to meet this document.

*5. Purity Specification of Recycled R–12 Refrigerant Supplied in Containers From Other Recycle Sources*

Purity specification of recycled R–12 refrigerant supplied in containers from other recycle sources, for service of mobile air-conditioning systems, shall meet ARI Standard 700–88 (Air Conditioning and Refrigeration Institute).

*6. Operation of the Recycle Equipment*

This shall be done in accordance with SAE J1989.

*Rationale*

Not applicable.

*Relationship of SAE Standard to ISO Standard*

Not applicable.

*Reference Section*

SAE J1989, Recommended Service Procedure for the Containment of R–12
SAE J1990, Extraction and Recycle Equipment for Mobile Automotive Air-Conditioning Systems
ARI Standard 700–88

*Application*

This information applies to refrigerant used to service automobiles, light trucks, and other vehicles with similar CFC-12 systems. Systems used on mobile vehicles for refrigerated cargo that have hermetically sealed, rigid pipe are not covered in this document.

*Committee Composition*

DEVELOPED BY THE SAE DEFROST AND INTERIOR CLIMATE CONTROLS STANDARDS COMMITTEE

W.J. Atkinson, Sun Test Engineering, Paradise Valley, AZ—Chairman
J.J. Amin, Union Lake, MI
H.S. Andersson, Saab Scania, Sweden
P.E. Anglin, ITT Higbie Mfg. Co., Rochester, MI
R.W. Bishop, GMC, Lockport, NY
D. Hawks, General Motors Corporation, Pontiac, MI
J.J. Hernandez, NAVISTAR, Ft. Wayne, IN
H. Kaltner, Volkswagen AG, Germany, Federal Republic
D.F. Last, GMC, Troy, MI
D.E. Linn, Volkswagen of America, Warren, MI
J.H. McCorkel, Freightliner Corp., Charlotte, NC
C.J. McLachlan, Livonia, MI

H.L. Miner, Climate Control Inc., Decatur, IL
R.J. Niemiec, General Motors Corp., Pontiac, MI
N. Novak, Chrysler Corp., Detroit, MI
S. Oulouhojian, Mobile Air Conditioning Society, Upper Darby, PA
J. Phillips, Air International, Australia
R.H. Proctor, Murray Corp., Cockeysville, MD
G. Rolling, Behr America Inc., Ft. Worth, TX
C.D. Sweet, Signet Systems Inc., Harrodsburg, KY
J.P. Telesz, General Motors Corp., Lockport, NY

EXTRACTION AND RECYCLE EQUIPMENT FOR MOBILE AUTOMOTIVE AIR CONDITIONING SYSTEMS

SAE Recommended Practice, SAE J1990 (1991)[1]

*0. Foreword*

Due to the CFC's damaging effect on the ozone layer, recycle of CFC-12 (R–12) used in mobile air-conditioning systems is required to replace system venting during normal service operations. Establishing recycle specifications for R–12 will provide the same level of performance as new refrigerant.

Extensive field testing with the EPA and the auto industry indicates that R–12 can be reused, provided that it is cleaned to specifications in SAE J1991. The purpose of this document is to establish the specific minimum equipment specification required for recycle of R–12 that has been directly removed from mobile systems for reuse in mobile automotive air-conditioning systems.

*1. Scope*

The purpose of this document is to provide equipment specifications for CFC-12 (R–12) recycling equipment. This information applies to equipment used to service automobiles, light trucks, and other vehicles with similar CFC-12 air-conditioning systems. Systems used on mobile vehicles for refrigerated cargo that have hermetically sealed systems are not covered in this document. The equipment in this document is intended for use with refrigerant that has been directly removed from, and intended to be returned to, a mobile air-conditioning system. Should other revisions due to operational or technical requirements occur, this document may be amended.

*2. References*

2.1 Applicable Documents:

2.1.1 SAE Publications—Available from SAE, 400 Commonwealth Drive, Warrendale, PA 15096–0001.

SAE J1991—Standard of Purity for Use in Mobile Air-Conditioning Systems

SAE J2196—Service Hose for Automotive Air-Conditioning

2.1.2 CGA Publications—Available from CGA, Crystal Gateway #1, Ste. 501, 1235 Jefferson Davis Hwy., Arlington, VA 22202

CGA Pamphlet S–1.1—Pressure Relief Device Standard Part 1—Cylinders for Compressed Gases

*3. Specification and General Description*

3.1 The equipment must be able to extract and process CFC-12 from mobile air-conditioning systems. The equipment shall process the contaminated R–12 samples as defined in 8.4 and shall clean the refrigerant to the level as defined in SAE J1991.

3.2 The equipment shall be suitable for use in an automotive service environment and be capable of continuous operation in ambients from 10 to 49 °C.

3.3 The equipment must be certified by Underwriters Laboratories or an equivalent certifying laboratory.

3.4 The equipment shall have a label ''Design Certified by (Company Name) to Meet SAE J1991''. The minimum letter size shall be bold type 3 mm in height.

*4. Refrigeration Recycle Equipment Requirements*

4.1 Moisture and Acid—The equipment shall incorporate a desiccant package that must be replaced before saturated with moisture and whose mineral acid capacity is at least 5% by weight of total system dry desiccant.

4.1.1 The equipment shall be provided with a moisture detection device that will reliably indicate when moisture in the CFC-12 exceeds the allowable level and requires the filter/dryer replacement.

4.2 Filter—The equipment shall incorporate an in-line filter that will trap particulates of 15 μm or greater.

4.3 Noncondensable Gas.

4.3.1 The equipment shall either automatically purge noncondensables (NCGs) if the acceptable level is exceeded or incorporate a device to alert the operator that NCG level has been exceeded. NCG removal must be part of normal operation of the equipment and instructions must be provided

[1] This standard is appropriate for equipment certified after February 1, 1992. This equipment may be marked design certified for compliance with SAE J1990 (1991). The standard for approval for equipment certified on or before February 1, 1992 is SAE J1990 (1989). This equipment may be marked design certified for compliance with SAE J1990 (1989). Both types of equipment are considered approved under the requirements of this regulation.

to enable the task to be accomplished within 30 minutes.

4.3.2 Refrigerant loss from noncondensable gas purging during testing described in Section 8 shall not exceed five percent (5%) by weight of the total contaminated refrigerant removed from the test system.

4.3.3 Transfer of Recycled Refrigerant—Recycled refrigerant for recharging and transfer shall be taken from the liquid phase only.

*5. Safety Requirements*

5.1 The equipment must comply with applicable federal, state and local requirements on equipment related to the handling of R–12 material. Safety precautions or notices related to the safe operation of the equipment shall be prominently displayed on the equipment and should also state ''Caution—Should Be Operated By Qualified Personnel''.

*6. Operating Instructions*

6.1 The equipment manufacturer must provide operating instructions, necessary maintenance procedures, and source information for replacement parts and repair.

6.2 The equipment must prominently display the manufacturer's name, address and any items that require maintenance or replacement that affect the proper operation of the equipment. Operation manuals must cover information for complete maintenance of the equipment to assure proper operation.

*7. Functional Description*

7.1 The equipment must be capable of ensuring recovery of the R–12 from the system being service, by reducing the system pressure below atmospheric to a minimum of 102 mm of mercury.

7.2 To prevent overcharge, the equipment must be equipped to protect the tank used to store the recycled refrigerant with a shutoff device and a mechanical pressure relief valve.

7.3 Portable refillable tanks or containers used in conjunction with this equipment must meet applicable Department of Transportation (DOT) or Underwriters Laboratories (UL) Standards and be adaptable to existing refrigerant service and charging equipment.

7.4 During operation, the equipment shall provide overfill protection to assure the storage container, internal or external, liquid fill does not exceed 80% of the tank's rated volume at 21.1 °C (70 °F) per DOT standards, CFR title 49, §173.304 and American Society of Mechanical Engineers.

7.4.1 Additional Storage Tank Requirements.

7.4.1.1 The cylinder valve shall comply with the standard for cylinder valves, UL 1769.

7.4.1.2 The pressure relief device shall comply with the Pressure Relief Device Standard Part 1—Cylinders for Compressed Gases, CGA Pamphlet S–1.1.

7.4.1.3 The tank assembly shall be marked to indicate the first retest date, which shall be 5 years after date of manufacture. The marking shall indicate that retest must be performed every subsequent 5 years. The marking shall be in letters at least ¼ in high.

7.5 All flexible hoses must meet SAE J2196 hose specification effective January 1, 1992.

7.6 Service hoses must have shutoff devices located within 30 cm (12 in) of the connection point to the system being serviced to minimize introduction of noncondensable gases into the recovery equipment and the release of the refrigerant when being disconnected.

7.7 The equipment must be able to separate the lubricant from the recovered refrigerant and accurately indicate the amount removed during the process, in 30 ml units. Refrigerant dissolves in lubricant sample. This creates the illusion that more lubricant has been recovered than actually has been. The equipment lubricant measuring system must take in account such dissolved refrigerant to prevent overcharging the vehicle system with lubricant. Note: Use only new lubricant to replace the amount removed during the recycle process. Used lubricant should be discarded per applicable federal, state, and local requirements.

7.8 The equipment must be capable of continuous operation in ambient of 10 to 49 °C (50 to 120 °F).

7.9 The equipment should be compatible with leak detection material that may be present in the mobile AC system.

*8. Testing*

This test procedure and the requirement are used for evaluation of the equipment for its ability to clean the contaminated R–12 refrigerant.

8.1 The equipment shall clean the contaminated R–12 refrigerant to the minimum purity level as defined in SAE J1991, when tested in accordance with the following conditions:

8.2 For test validation, the equipment is to be operated according to the manufacturer's instructions.

8.3 The equipment must be preconditioned with 13.6 kg (30 lb) of the standard contaminated R–12 at an ambient of 21 °C (70 °F) before starting the test cycle. Sample amounts are not to exceed 1.13 kg (2.5 lb) with sample amounts to be repeated every 5 min. The sample method fixture, defined in Fig. 1, shall be operated at 24 °C (75 °F).

8.4 Contaminated R–12 Samples.

8.4.1 Standard contaminated R–12 refrigerant shall consist of liquid R–12 with 100

ppm (by weight) moisture at 21 °C (70 °F) and 45,000 ppm (by weight) mineral oil 525 suspension nominal and 770 ppm by weight of noncondensable gases (air).

8.4.2 High moisture contaminated sample shall consist of R–12 vapor with 1,000 ppm (by weight) moisture.

8.4.3 High oil contaminated sample shall consist of R–12 with 200,000 ppm (by weight) mineral oil 525 suspension viscosity nominal.

8.5 Test Cycle.

8.5.1 After preconditioning as stated in 8.3, the test cycle is started, processing the following contaminated samples through the equipment:

8.5.1.1 3013.6 kg (30 lb) of standard contaminated R–12.

8.5.1.2 1 kg (2.2 lb) of high oil contaminated R–12.

8.5.1.3 4.5 kg (10 lb) of standard contaminated R–12.

8.5.1.4 1 kg (2.2 lb) of high moisture contaminated R–12.

8.6 Equipment Operating Ambient.

8.6.1 The R–12 is to be cleaned to the minimum purity level, as defined in SAE J1991, with the equipment operating in a stable ambient of 10, 21, and 49 °C (50, 70, and 120 °F) and processing the samples as defined in 8.5.

8.7 Sample Analysis.

8.7.1 The processed contaminated sample shall be analyzed according to the following procedure.

8.8 Quantitative Determination of Moisture.

8.8.1 The recycled liquid phase sample of CFC-12 shall be analyzed for moisture content via Karl Fischer coulometer titration or an equivalent method. The Karl Fischer apparatus is an instrument for precise determination of small amounts of water dissolved in liquid and/or gas samples.

8.8.2 In conducting the test, a weighed sample of 30 to 130 grams is vaporized directly into the Karl Fischer analyte. A coulometer titration is conducted and the results are calculated and displayed as parts per million moisture (weight).

8.9 Determination of Percent Lubricant.

8.9.1 The amount of oil in the recycled sample of CFC-12 is to be determined by gravimetric analysis.

8.9.2 Following venting of noncondensable, in accordance with the manufacturer's operating instructions, the refrigerant container shall be shaken for 5 minutes prior to extracting samples for test.

8.9.3 A weighted sample of 175 to 225 grams of liquid CFC-12 is allowed to evaporate at room temperature. The percent oil is to be calculated from the weight of the original sample and the residue remaining after the evaporation.

8.10 Noncondensable Gas.

8.10.1 The amount of noncondensable gas is to be determined by gas chromatography. A sample of vaporized refrigerant liquid shall be separated and analyzed by gas chromatography. A Porapak Q column at 130 °C and a hot wire detector may be used for analysis.

8.10.2 This test shall be conducted on recycled refrigerant (taken from the liquid phase) within 30 minutes after the proper venting of noncondensable.

8.10.3 Samples shall be shaken for 8 hours prior to retesting while at a temperature of 24 ±2.8 °C (75 ±5 °F). Known volumes of refrigerant vapor are to be injected for separation and analysis by means of gas chromatography. A Porapak Q column at 130 °C (266 °F) and a hot wire detector are to be used for the analysis.

8.10.4 This test shall be conducted at 21 and 49 °C and may be performed in conjunction with the testing defined in Section 8.6. The equipment shall process at least 13.6 kg of standard contaminated refrigerant for this test.

8.11 Sample Requirements.

8.11.1 The sample shall be tested as defined in 8.7, 8.8, 8.9, and 8.10 at ambient temperatures of 10, 21, and 49 °C (50, 70, and 120 °F) as defined in 8.6.1.

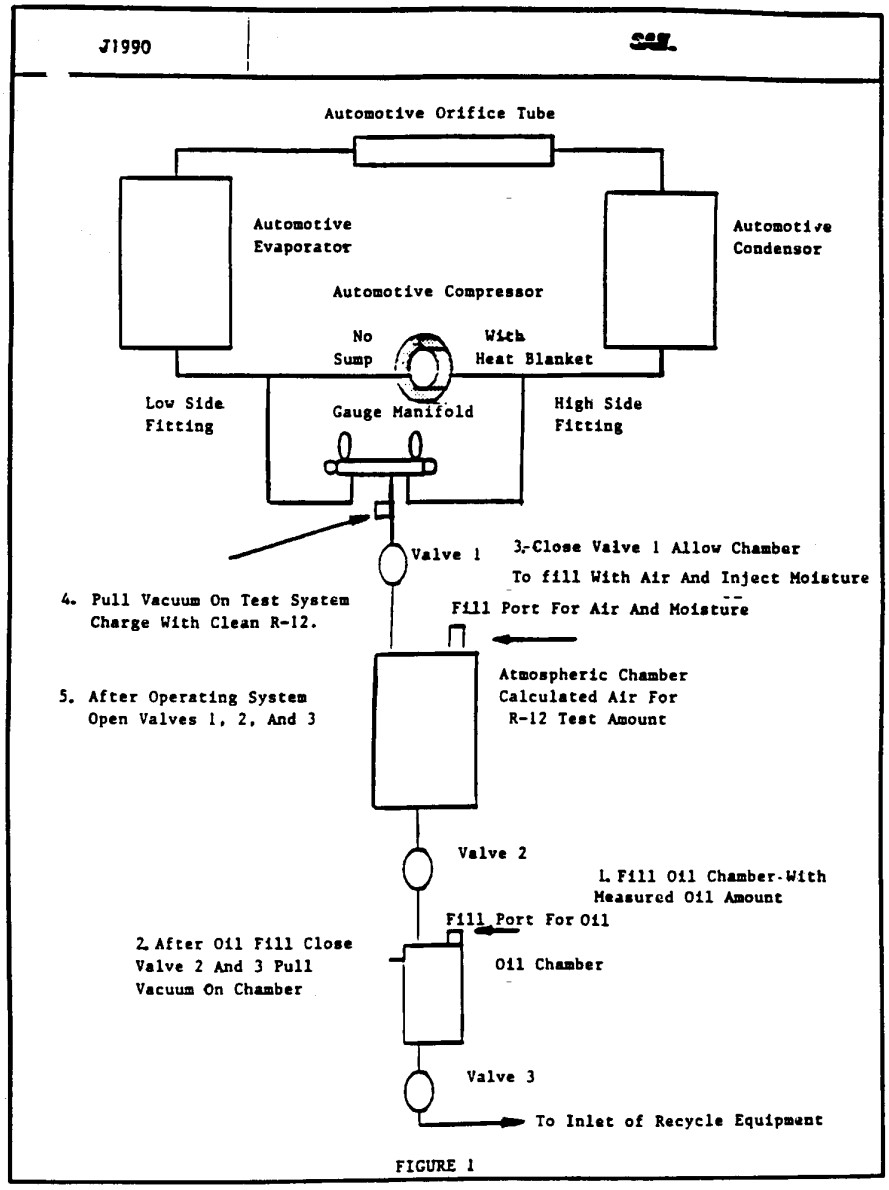


FIGURE 1

RECOMMENDED SERVICE PROCEDURE FOR THE CONTAINMENT OF R–12

*1. Scope*

During service of mobile air-conditioning systems, containment of the refrigerant is important. This procedure provides service guidelines for technicians when repairing vehicles and operating equipment defined in SAE J1990.

*2. References*

SAE J1990, Extraction and Recycle Equipment for Mobile Automotive Air-Conditioning Systems

*3. Refrigerant Recovery Procedure*

3. 1 Connect the recovery unit service hoses, which shall have shutoff valves within 12 in (30 cm) of the service ends, to the vehicle air-conditioning system service ports.

3.2 Operate the recovery equipment as covered by the equipment manufacturers recommended procedure.

3.2.1 Start the recovery process and remove the refrigerant from the vehicle AC system. Operate the recovery unit until the vehicle system has been reduced from a pressure to a vacuum. With the recovery unit shut off for at least 5 min, determine that there is no refrigerant remaining in the vehicle AC system. If the vehicle system has pressure, additional recovery operation is required to remove the remaining refrigerant. Repeat the operation until the vehicle AC system vacuum level remains stable for 2 min.

3.3 Close the valves in the service lines and then remove the service lines from the vehicle system. Proceed with the repair/service. If the recovery equipment has automatic closing valves, be sure they are properly operating.

*4. Service With Manifold Gage Set*

4.1 Service hoses must have shutoff valves in the high, low, and center service hoses within 12 in (30 cm) of the service ends. Valves must be closed prior to hose removal from the air-conditioning system. This will reduce the volume of refrigerant contained in the service hose that would otherwise be vented to atmosphere.

4.2 During all service operations, the valves should be closed until connected to the vehicle air-conditioning system or the charging source to avoid introduction of air and to contain the refrigerant rather than vent open to atmosphere.

4.3 When the manifold gage set is disconnected from the air-conditioning system or when the center hose is moved to another device which cannot accept refrigerant pressure, the gage set hoses should first be attached to the reclaim equipment to recover the refrigerant from the hoses.

*5. Recycled Refrigerant Checking Procedure for Stored Portable Auxiliary Container*

5.1 To determine if the recycled refrigerant container has excess noncondensable gases (air), the container must be stored at a temperature of 65 °F (18.3 °C) or above for a period of time, 12 h, protected from direct sun.

5.2 Install a calibrated pressure gage, with 1 psig divisions (0.07 kg), to the container and determine the container pressure.

5.3 With a calibrated thermometer, measure the air temperature within 4 in (10 cm) of the container surface.

5.4 Compare the observed container pressure and air temperature to determine if the container exceeds the pressure limits found on Table 1, e.g., air temperature 70 °F (21 °C) pressure must not exceed 80 psig (5.62 kg/cm$^2$).

TABLE 1

| Temp °F | Psig | Temp °F | Psig | Temp °F | Psig | Temp °F | Psig | Temp °F | Psig |
|---|---|---|---|---|---|---|---|---|---|
| 65 | 74 | 75 | 87 | 85 | 102 | 95 | 118 | 105 | 136 |
| 66 | 75 | 76 | 88 | 86 | 103 | 96 | 120 | 106 | 138 |
| 67 | 76 | 77 | 90 | 87 | 105 | 97 | 122 | 107 | 140 |
| 68 | 78 | 78 | 92 | 88 | 107 | 98 | 124 | 108 | 142 |
| 69 | 79 | 79 | 94 | 89 | 108 | 99 | 125 | 109 | 144 |
| 70 | 80 | 80 | 96 | 90 | 110 | 100 | 127 | 110 | 146 |
| 71 | 82 | 81 | 98 | 91 | 111 | 101 | 129 | 111 | 148 |
| 72 | 83 | 82 | 99 | 92 | 113 | 102 | 130 | 112 | 150 |
| 73 | 84 | 83 | 100 | 93 | 115 | 103 | 132 | 113 | 152 |
| 74 | 86 | 84 | 101 | 94 | 116 | 104 | 134 | 114 | 154 |

TABLE 1 (METRIC)

| Temp °C | Pres | Temp °C | Pres | Temp °C | Pres | Temp °C | Pres | Temp °C | PRres |
|---|---|---|---|---|---|---|---|---|---|
| 18.3 | 5.20 | 23.9 | 6.11 | 29.4 | 7.17 | 35.0 | 8.29 | 40.5 | 9.56 |
| 18.8 | 5.27 | 24.4 | 6.18 | 30.0 | 7.24 | 35.5 | 8.43 | 41.1 | 9.70 |
| 19.4 | 5.34 | 25.0 | 6.32 | 30.5 | 7.38 | 36.1 | 8.57 | 41.6 | 9.84 |
| 20.0 | 5.48 | 25.5 | 6.46 | 31.1 | 7.52 | 36.6 | 8.71 | 42.2 | 9.98 |
| 20.5 | 5.55 | 26.1 | 6.60 | 31.6 | 7.59 | 37.2 | 8.78 | 42.7 | 10.12 |
| 21.1 | 5.62 | 26.6 | 6.74 | 32.2 | 7.73 | 37.7 | 8.92 | 43.3 | 10.26 |
| 21.6 | 5.76 | 27.2 | 6.88 | 32.7 | 7.80 | 38.3 | 9.06 | 43.9 | 10.40 |
| 22.2 | 5.83 | 27.7 | 6.95 | 33.3 | 7.94 | 38.8 | 9.13 | 44.4 | 10.54 |
| 22.7 | 5.90 | 28.3 | 7.03 | 33.9 | 8.08 | 39.4 | 9.27 | 45.0 | 10.68 |
| 23.3 | 6.04 | 28.9 | 7.10 | 34.4 | 8.15 | 40.0 | 9.42 | 45.5 | 10.82 |

Pres kg/sq cm.

5.5 If the container pressure is less than the Table 1 values and has been recycled, limits of noncondensable gases (air) have not been exceeded and the refrigerant may be used.

5.6 If the pressure is greater than the range and the container contains recycled material, slowly vent from the top of the container a small amount of vapor into the recycle equipment until the pressure is less than the pressure shown on Table 1.

5.7 If the container still exceeds the pressure shown on Table 1, the entire contents of the container shall be recycled.

*6. Containers for Storage of Recycled Refrigerant*

6.1 Recycled refrigerant should not be salvaged or stored in disposable refrigerant containers. This is the type of container in which virgin refrigerant is sold. Use only DOT CFR title 49 or UL approved storage containers for recycled refrigerant.

6.2 Any container of recycled refrigerant that has been stored or transferred must be checked prior to use as defined in section 5.

*7. Transfer of Recycled Refrigerant*

7.1 When external portable containers are used for transfer, the container must be evacuated at least 27 in of vacuum (75 mm Hg absolute pressure) prior to transfer of the recycled refrigerant. External portable containers must meet DOT and UL standards.

7.2 To prevent on-site overfilling when transferring to external containers, the safe filling level must be controlled by weight and must not exceed 60% of container gross weight rating.

*8. Disposal of Empty/Near Empty Containers*

8.1 Since all the refrigerant may not be removed from disposable refrigerant containers during normal system charging procedures, empty/near empty container contents should be reclaimed prior to disposal of the container.

8.2 Attach the container to the recovery unit and remove the remaining refrigerant. When the container has been reduced from a pressure to a vacuum, the container valve can be closed. The container should be marked empty and is ready for disposal.

*Rationale*

Not applicable.

*Relationship of SAE Standard to ISO Standard.*

Not applicable.

*Reference Section*

SAE J1990, Extraction and Recycle Equipment for Mobile Automotive Air-Conditioning Systems

*Application*

During service of mobile air-conditioning systems, containment of the refrigerant is important. This procedure provides service guidelines for technicians when repairing vehicles and operating equipment defined in SAE J1990.

*Committee Composition*

*Developed by the SAE Defrost and Interior Climate Control Standards Committee*

W.J. Atkinson, Sun Test Engineering, Paradise Valley, AZ—Chairman
J.J. Amin, Union Lake, MI
H.S. Andersson, Saab Scania, Sweden
P.E. Anglin, ITT Higbie Mfg. Co., Rochester, MI
R.W. Bishop, GMC, Lockport, NY
D.Hawks, General Motors Corporation, Pontiac, MI
J.J. Hernandez, NAVISTAR, Ft. Wayne, IN
H. Kaltner, Volkswagen AG, Germany, Federal Republic
D.F. Last, GMC, Troy, MI
D.E. Linn, Volkswagen of America, Warren, MI
J.H. McCorkel, Freightliner Corp., Charlotte, NC
C.J. McLachlan, Livonia, MI
H.L. Miner, Climate Control Inc., Decatur, IL
R.J. Niemiec, General Motors Corp., Pontiac, MI
N. Novak, Chrysler Corp., Detroit, MI
S. Oulouhojian, Mobile Air Conditioning Society, Upper Darby, PA
J. Phillips, Air International, Australia
R.H. Proctor, Murray Corp., Cockeysville, MD
G. Rolling, Behr America Inc., Ft. Worth, TX
C.D. Sweet, Signet Systems Inc., Harrodsburg, KY
J.P. Telesz, General Motors Corp., Lockport, NY

## APPENDIX B TO SUBPART B OF PART 82—STANDARD FOR RECOVER EQUIPMENT

SAE J1989, Recommended Service Procedure for the Containment of R–12, as set forth under Appendix A, also applies to this Appendix B.

SAE J2209, issued June, 1992.

### SAE RECOMMENDED PRACTICE: CFC-12 (R–12) EXTRACTION EQUIPMENT FOR MOBILE AUTOMOTIVE AIR-CONDITIONING SYSTEMS

*Foreword*

CFCs deplete the stratospheric ozone layer that protects the earth against harmful ultraviolet radiation. To reduce the emissions

of CFCs, the 1990 Clean Air Act requires recycle of CFC-12 (R–12) used in mobile air-conditioning systems to eliminate system venting during service operations. SAE J1990 establishes equipment specifications for on-site recovery and reuse of CFCs in mobile air-conditioning systems. Establishing extraction equipment specifications for CFC-12 will provide service facilities with equipment to assure that venting of refrigerant will not occur.

1. Scope

The purpose of this document is to provide equipment specifications for CFC-12 (R–12) recovery for recycling on-site or for transport off-site to a refrigerant reclamation facility that will process it to ARI (Air-Conditioning and Refrigeration Institute) standard 700–93 as a minimum. It is not acceptable that the refrigerant removed from a mobile air-conditioning system, with this equipment, be directly returned to a mobile air-conditioning system.

This information applies to equipment used to service automobiles, light trucks, and other vehicles with similar CFC-12 systems.

2. References

2. Applicable Documents—The following documents form a part of this specification to the extent specified herein.

2.1.1 SAE Publications—Available from SAE, 400 Commonwealth Drive, Warrendale, PA 15096–0001.

SAE J639—Vehicle Service Coupling

SAE J1990—Extraction and Recycle Equipment for Mobile Automotive Air-Conditioning Systems

SAE J2196—Service Hose for Automotive Air-Conditioning

2.1.2 ARI Publications—Available from Air-Conditioning and Refrigeration Institute, 1501 Wilson Boulevard, Sixth Floor, Arlington, VA 22209.

ARI 700–93—Specifications for Fluorocarbon Refrigerants

2.1.3 CGA Publications—Available from CGA, Crystal Gateway #1, Suite 501, 1235 Jefferson Davis Highway, Arlington, VA 22202.

CGA S–1.1—Pressure Relief Device Standard Part 1—Cylinders for Compressed Gases

2.1.4 DOT Specifications—Available from the Superintendent of Documents, U.S. Government Printing Office, Washington, DC 20402.

49 CFR, Section 173.304—Shippers—General Requirements for Shipments and Packagings

2.1.5 UL Publications—Available from Underwriters Laboratories, 333 Pfingsten Road, Northbrook, IL 60062–2096.

UL 1769—Cylinder Valves

3. Specifications and General Description

3.1 The equipment must be able to extract CFC-12 from a mobile air-conditioning system.

3.2 The equipment discharge or transfer fitting shall be unique to prevent the unintentional use of extracted CFC-12 to be used for recharging auto air conditioners.

3.3 The equipment shall be suitable for use in an automotive service garage environment as defined in 6.8.

3.4 Equipment Certification—The equipment must be certified by Underwriters Laboratories or an equivalent certifying laboratory to meet this standard.

3.5 Label Requirements—The equipment shall have a label ''Design Certified by (company name) to meet SAE J2209 for use with CFC-12. The refrigerant from this equipment must be processed to ARI 700–93 specifications before reuse in a mobile air-conditioning system.'' The minimum letter size shall be bold type 3mm in height.

4. Safety Requirements

4.1 The equipment must comply with applicable federal, state and local requirements on equipment related to the handling of R–12 material. Safety precautions or notices or labels related to the safe operation of the equipment shall also be prominently displayed on the equipment and should also state ''CAUTION—SHOULD BE OPERATED BY CERTIFIED PERSONNEL.'' The safety identification shall be located on the front near the controls.

4.2 The equipment must comply with applicable safety standards for electrical and mechanical requirements.

5. Operating Instructions

5.1 The equipment manufacturer must provide operating instructions, necessary maintenance procedures and source information for replacement parts and repair.

5.2 The equipment must prominently display the manufacturer's name, address and any items that require maintenance or replacement that affect the proper operation of the equipment. Operation manuals must cover information for complete maintenance of the equipment to assure proper operation.

6. Functional Description

6.1 The equipment must be capable of ensuring recovery of the CFC-12 from the system being serviced, by reducing the system pressure to a minimum of 102 mm of mercury below atmospheric. To prevent system delayed outgassing, the unit must have a device that assures that the refrigerant has been recovered from the air-conditioning system.

6.1.1 Testing laboratory certification of the equipment capability is required which

shall process contaminated refrigerant samples at specific temperatures.

6.2 The equipment must be preconditioned with 13.6 kg of the standard contaminated CFC-12 at an ambient of 21 °C before starting the test cycle. Sample amounts are not to exceed 1.13 kg with sample amounts to be repeated every 5 minutes. The sample method fixture defined in Figure 1 of appendix A shall be operated at 24 °C. Contaminated CFC-12 samples shall be processed at ambient temperatures of 10 and 49 °C.

6.2.1 Contaminated CFC-12 sample.

6.2.2 Standard contaminated CFC-12 refrigerant, 13.6 Kg sample size, shall consist of liquid CFC-12 with 100 ppm (by weight) moisture at 21 °C and 45,000 ppm (by weight) mineral oil 525 suspension nominal and 770 ppm (by weight) of noncondensable gases (air).

6.3 Portable refillable containers used in conjunction with this equipment must meet applicable DOT standards.

6.3.1 The container color must be gray with yellow top to identify that it contains used CFC-12 refrigerant. It must be permanently marked on the outside surface in black print at least 20 mm high ''DIRTY R–12—DO NOT USE, MUST BE REPROCESSED''.

6.3.2 The portable refillable container shall have a SAE 3/8 inch flare male thread connection as identified in SAE J639 CFC-12 High Pressure Charging Valve Figure 2.

6.3.3 During operation the equipment shall provide overfill protection to assure that the storage container liquid fill does not exceed 80% of the tank's rated volume at 21 °C per DOT standard, CFR Title 49, section 173.304 and the American Society of Mechanical Engineers.

6.4 Additional Storage Tank Requirements.

6.4.1 The cylinder valve shall comply with the standard for cylinder valves, UL 1769.

6.4.2 The pressure relief device shall comply with the pressure relief device standard part 1, CGA pamphlet S–1.1.

6.4.3 The container assembly shall be marked to indicate the first retest date, which shall be 5 years after date of manufacture. The marking shall indicate that retest must be performed every subsequent five years. The marking shall be in letters at least 6 mm high.

6.5 All flexible hoses must meet SAE J2196 standard for service hoses.

6.6 Service hoses must have shutoff devices located within 30 cm of the connection point to the system being serviced to minimize introduction of noncondensable gases into the recovery equipment during connection and the release of the refrigerant during disconnection.

6.7 The equipment must be able to separate the lubricant from the recovered refrigerant and accurately indicate the amount removed from the system during processing in 30 ml units.

6.7.1 The purpose of indicating the amount of lubricant removed is to ensure that a proper amount is returned to the mobile air-conditioning system for compressor lubrication.

6.7.2 Refrigerant dissolved in this lubricant must be accounted for to prevent system lubricant overcharge of the mobile air-conditioning system.

6.7.3 Only new lubricant, as identified by the system manufacturer, should be replaced in the mobile air-conditioning system.

6.7.4 Removed lubricant from the system and/or the equipment shall be disposed of in accordance with applicable federal, state and local procedures and regulations.

6.8 The equipment must be capable of continuous operation in ambient temperatures of 10 °C to 49 °C and comply with 6.1.

6.9 The equipment should be compatible with leak detection material that may be present in the mobile air-conditioning system.

7.0 For test validation, the equipment is to be operated according to the manufacturer's instructions.

[60 FR 21688, May 2, 1995]

## APPENDIX C TO SUBPART B OF PART 82—SAE J2788 STANDARD FOR RECOVERY/RECYCLE AND RECOVERY/RECYCLE/RECHARGING EQUIPMENT FOR HFC–134a REFRIGERANT

### FOREWORD

This Appendix establishes the specific minimum equipment requirements for the recovery/recycling of HFC–134a that has been directly removed from, and is intended for reuse in, mobile air-conditioning systems and recovery/recycling and system recharging of recycled, reclaimed or virgin HFC–134a. Establishing such specifications will ensure that system operation with recycled HFC–134a will provide the same level of performance and durability as new refrigerant.

### 1. SCOPE

The purpose of this SAE Standard is to establish the specific minimum equipment performance requirements for recovery and recycling of HFC–134a that has been directly removed from, and is intended for reuse in, mobile air-conditioning (A/C) systems. It also is intended to establish requirements for equipment used to recharge HFC–134a to an accuracy level that meets Section 9 of this document and SAE J2099. The requirements apply to the following types of service equipment and their specific applications.

a. Recovery/Recycling Equipment,

b. Recovery/Recycling—Refrigerant Charging,

c. Refrigerant Recharging Equipment Only.

1.1 Improved refrigerant recovery equipment is required to ensure adequate refrigerant recovery to reduce emissions and provide for accurate recharging of mobile air conditioning systems. Therefore, 12 months following the publication date of this standard, requirements in this standard supplements and supersedes, SAE J2210.

## 2. References

### 2.1 Applicable Publications

The following publications form a part of this specification to the extent specified herein. Unless otherwise indicated, the latest issue of SAE publications shall apply.

#### 2.1.1 SAE Publications

Available from SAE, 400 Commonwealth Drive, Warrendale, PA 15096–0001, Tel: 877–606–7323 (inside USA and Canada) or 724–776–4970 (outside USA), www.sae.org.

SAE J2099 Standard of Purity for Recycled HFC–134a (R–134a) for Use in Mobile Air-Conditioning Systems

SAE J2196 Service Hoses for Automotive Air-Conditioning

SAE J2197 Service Hose Fittings for Automotive Air-Conditioning

SAE J2296 Retest of Refrigerant Container

#### 2.1.2 CGA Publications

Available from CGA, 4221 Walney Road, 5th Floor, Chantilly VA 20151–2923, Tel: 703–788–2700, *http://www.cganet.com.*

CGA Pamphlet S–1.1 Pressure Relief Device Standard Part 1—Cylinders for Compressed Gases 2.1.3 DOT Publications

Available from the Superintendent of Documents, U.S. Government Printing Office, Mail Stop: SSOP, Washington, DC 20402–9320.

OT Standard, CFR Title 49, Section 173.304 Shippers—General Requirements for Shipments and Packagings

#### 2.1.4 UL Publications

Available from Underwriters Laboratories Inc., 333 Pfingsten Road, Northbrook, IL 60062–2096, Tel: 847–272–8800, *http://www.ul.com.*

UL 1769 Cylinder Valves

UL 1963 Refrigerant Recovery/Recycling Equipment

## 3. Specification and General Description

3.1 The equipment must be able to remove and process HFC–134a (R–134a) from mobile A/C systems to the purity level specified in SAE J2099.

3.2 The equipment shall be suitable for use in an automotive service garage environment and be capable of continuous operation in ambients from 10 °C to 49 °C (50 °F to 120 °F). If it is designed to recharge a system, and it uses a scale for this purpose, the scale must demonstrate the ability to maintain accuracy per the test in 10.2.

3.3 The equipment must be certified that it meets this specification by an EPA listed certifying laboratory.

3.4 The equipment shall have a label, which states, ''Certified by (Certifying Agent) to Meet SAE J2788 superseding SAE J2210'' in bold-type letters a minimum of 3 mm (⅛ in) in height.

## 4. Refrigerant Recycling Equipment Requirements

### 4.1 Moisture and Acid

The equipment shall incorporate a desiccant package that must be replaced before saturation with moisture, and whose mineral acid capacity is at least 5% by weight of the dry desiccant.

4.1.1 The equipment shall be provided with a means of indicating when the filter desiccant moisture capacity has reached the allowable limit and desiccant replacement is required. This may include a reliable means of detecting moisture level or an algorithm based on the amount refrigerant recovered. The user must be clearly alerted to replace the filter prior to the full saturation. Warnings shall be displayed on screens and (printed on printouts where applicable). The warnings must explain that the machine is approaching the end of filter life. The manufacturer must incorporate a lockout when the end of filter life is reached.

4.1.2 The manufacturer shall use an identification system to ensure that a new filter has been installed to reset the machine for operation.

### 4.2 Filter

The equipment shall incorporate an in-line filter that will trap particulates of 15 micron spherical diameter or greater.

### 4.3 Scale (if used)

The scale must maintain accuracy when moved, as per the test in Section 10.

4.4 Purging Noncondensable Gases

4.4.1 The equipment shall automatically purge noncondensables (NCGs), which are primarily air, if the acceptable level is exceeded. NCG removal must be part of the normal operation of the equipment and instructions must be provided to enable the task to be accomplished within 30 min (to reach the refrigerant purity level specified in SAE J2099).

4.4.2 Refrigerant loss from noncondensable gas purging during the testing described in Section 8 shall be minimized by a method that initiates a purge when the machine has not been in use for a period long enough for air-refrigerant separation in the tank to have occurred.

4.5 Recharging and Transfer of Recycled Refrigerant

Recycled refrigerant for recharging and transfer shall be taken from the liquid phase only.

5. SAFETY REQUIREMENTS

5.1 The equipment must comply with applicable federal, state, and local requirements on equipment related to handling HFC–134a material. Safety precautions or notices related to safe operation of the equipment shall be prominently displayed on the equipment and should also state ''CAUTION—SHOULD BE OPERATED BY QUALIFIED PERSONNEL.''

5.2 Under NO CIRCUMSTANCES should any equipment be pressure tested or leak tested with air/HFC–134a mixtures.

Do not use compressed air (shop air) or leak detection in systems containing HFC–134a.

6. OPERATING INSTRUCTIONS

6.1 The equipment manufacturer shall provide a warning in the instruction manual regarding the possibility of refrigerant contamination in the mobile A/C system being serviced.

6.1.1 If recovery/recycle equipment has refrigerant identification equipment, the refrigerant identification equipment shall meet the requirements of SAE J1771.

6.1.2 Recovery/recycling equipment not having refrigerant identification capability shall have instructions in the equipment manual covering possible contamination problems to the equipment and the contamination of the existing recycled refrigerant in the container in the equipment.

6.2 The equipment manufacturer must provide operating instructions, including proper attainment of vehicle system vacuum (i.e., when to stop the extraction process), filter/desiccant replacement, and purging of noncondensable gases (air). Also to be included are any other necessary maintenance procedures, source information for replacement parts and, repair and safety precautions.

6.2.1 The manual shall identify the proper maintaining of hose and seals to prevent the addition of excess air, due to leaks, during the recovery process, which would increase the NCG level in the recovered refrigerant.

6.3 The equipment must prominently display the manufacturer's name, address, the type of refrigerant it is designed to recycle, a service telephone number, and the part number for the replacement filter/drier.

7. FUNCTIONAL DESCRIPTION

The ability of the equipment to meet the refrigerant recovery and recharge specifications of this section shall be determined by the test procedures of Section 10.

7.1 The equipment must be capable of continuous operation in ambient temperatures of 10 °C (50 °F) to 49 °C (120 °F). Continuous is defined as completing recovery/recycle and recharge (if applicable) operations with no more than a brief reset period between vehicles, and shall not include time delays for allowing a system to outgas (which shall be part of the recovery period provided by this standard). Continuous may include time out for an air purge if necessary, although it is understood that extended equipment-off time is preferred to allow NCG and refrigerant separation in the supply tank for optimum results.

7.1.1 The equipment shall be capable of removing a minimum of 95.0% of the refrigerant from the test system in 30 minutes or less, without external heating, or use of any device (such as shields, reflectors, special lights, etc.) which could heat components of the system. The recovery procedures shall be based on 21 to 24 °C (70 to 75 °F) ambient temperature. The test system for qualifying shall be a 1.4 kg (3.0 lbs) capacity orifice tube/accumulator system in a 2005 Chevrolet Suburban with front and rear A/C, or the test option described in 10.5, and shall be determined by accurately weighing the recovery machine with the resolution and accuracy of within 3 g (.006 lb) in the range of the machine's weight. The laboratory shall maintain records of the vehicle, including its VIN (vehicle identification number).

7.1.2 However, the preceding shall not preclude a brief period of engine operation at fast idle (up to 15 minutes, up to 2000 rpm) to circulate refrigerant and oil, and provide some engine and warm-up of A/C refrigeration components. The laboratory shall monitor coolant temperature per the vehicle engine coolant temperature sensor, and coolant temperature shall not be allowed to exceed 105 °C (221 °F). The time required shall not be included in the total time of 30 minutes set forth in 7.1.1.

7.1.3 The refrigerant that is recovered, following oil separation, shall be measured and the quantity displayed, accurate to

within ±30 g (1.0 oz). The equipment must include a provision for checking the accuracy, per the requirements of 9.1.

7.2 During recovery operation, the equipment shall provide overfill protection to assure that the liquid fill of the storage container (which may be integral or external) does not exceed 80% of the tank's rated volume at 21 °C per Department of Transportation (DOT) Standard, CFR Title 49, Section 173.304 and the American Society of Mechanical Engineers.

7.3 Portable refillable tanks or containers used in conjunction with this equipment must be labeled ''HFC–134a (R–134a),'' meet applicable Department of Transportation (DOT) or Underwriters Laboratories (UL) Standards, and shall incorporate fittings per SAE J2197.

7.3.1 The cylinder valve shall comply with the standard for cylinder valves, UL 1769.

7.3.2 The pressure relief device shall comply with the Pressure Relief Device Standard Part 1—Cylinders for Compressed Gases, CGA Pamphlet S–1.1.

7.3.3 The tank assembly shall be marked to indicate the first retest date, which shall be 5 years after the date of manufacture. The marking shall indicate that retest must be performed every subsequent 5 years. SAE J2296 provides an inspection procedure. The marking shall be in letters at least 6 mm (¼ in) high.

7.3.4 ASME tanks as defined in UL–1963 may be used and are exempt from the retest requirements.

7.3.5 If the machine is designed for recharging, and the marketer permits use of a non-refillable refrigerant tank, the machine shall include a way to ensure refrigerant remaining in the tank (called the ''heel'') to no more than 2% of tank rated capacity when the tank is indicated to be empty. This may be done by the machine marketer as follows:

• Specify a non-venting procedure, to minimize the amount of unused refrigerant remaining in the tank. The machine shall include any devices required for the procedure, other than ordinary service shop tools and supplies, and include in the operator's manual, any instructions.

• Provide an automatic or (with instructions in the operator's manual) semi-automatic non-venting procedure with the machine.

The laboratory shall test for the 2% capability. For testing purposes it may use a refillable tank, minimum 15 lb capacity (6.8 kg) containing a minimum of 7.5 lbs (3.4 kg) refrigerant. The test is as follows:

a. Weigh the tank at the start of the test, on a scale accurate to plus/minus 3 grams, to ensure it contains sufficient refrigerant.

b. Operate the machine to remove refrigerant from the tank, charging into a holding container until the tank is indicated to be empty. Continue with the marketer's recommended procedure for the 2% capability.

c. Weigh the tank, on a scale accurate to plus/minus 3 grams.

d. Using the recovery compressor and/or a vacuum pump, draw the tank into a vacuum of 9 to 10 inches Mercury (225 to 250 mm Mercury). The tank must hold that vacuum with a decay of less than 10% in 10 minutes. If vacuum decays 10% or more, the procedure shall be repeated as necessary to ensure the tank is empty.

e. Weigh the tank on a scale accurate to plus/minus 3 grams. The difference in weight from Steps 3 to 5 shall be within 2% of the weight of the amount of refrigerant that is the tanks rated capacity.

f. This test may be performed at the conclusion of testing in 10.4 or 10.5. If the machine passes or has passed all other testing in this standard, the marketer may make modifications in procedure and/or machine operation and retest once at a later date, within 90 days. If the machine fails the retest, the machine must be completely retested per this standard, or may be certified per the following alternative. The marketer of the machine may specify use of a non-refillable refrigerant tank that provides for recycling and/or disposal of the residual refrigerant, in either case in a manner that does not vent. Or the marketer may exclude use of a one-way container, in the machine's operating instructions.

7.4 All flexible hoses must comply with SAE J2196.

7.5 Service hoses must have shutoff devices located at the connection point to the system being serviced. Any hoses or lines connected to refrigerant containers on or in the machine also shall have shutoff devices at the connection points, so that the containers may be changed without loss of refrigerant. A tank that is a permanent installation is exempt from this requirement.

7.6 The equipment shall separate oil from the refrigerant, measure the amount accurate to 20 ml (0.7 oz.), so the technician has an accurate basis for adding oil to the system.

7.6.1 This statement shall be predominately identified in the equipment service manual.

NOTE: Use only new lubricant to replace the amount removed during the recycling process. Used lubricant should be discarded per applicable federal, state and local requirements.

## 8. TESTING

This test procedure and its requirements are to be used to determine the ability of the recycling equipment to adequately recycle contaminated refrigerant.

8.1 The equipment shall be able to clean the contaminated refrigerant in §8.3 to the purity level defined in SAE J2099.

8.2 The equipment shall be operated in accordance with the manufacturer's operating instructions.

8.3 Contaminated HFC–134a (R–134a) Sample

8.3.1 The standard contaminated refrigerant shall consist of liquid HFC–134a with 1300 ppm (by weight) moisture (equivalent to saturation at 38°C, 100°F), 45000 ppm (by weight) HFC–134a compatible lubricant, and 1000 ppm (by weight) of noncondensable gases (air).

8.3.1.1 The HFC–134a compatible lubricant referred to in 8.3.1, shall be polyalkylene glycol (PAG), ISO 100 such as UCLN or PAG ISO 46–55, such as Idemitsu or equivalent, which shall contain no more than 1000 ppm by weight of moisture.

8.3.1.2 Although the test lubricant is a PAG, to conform to that used in the test vehicle system, the equipment manufacturer also shall ensure that it is compatible with polyol ester lubricant, such as ND 11 as used in electrically driven compressors in some hybrid vehicles.

8.4 Test Cycle

8.4.1 The equipment must be preconditioned by processing 13.6 kg (30 lb) of the standard contaminated HFC–134a at an ambient of 21 to 24°C (70 to 75°F) before starting the test cycle. 1.13 kg (2.56 lb) samples are to be processed at 5 min intervals. The test fixture, depicted in Figure 1, shall be operated at 21 to 24°C (70 to 75°F).

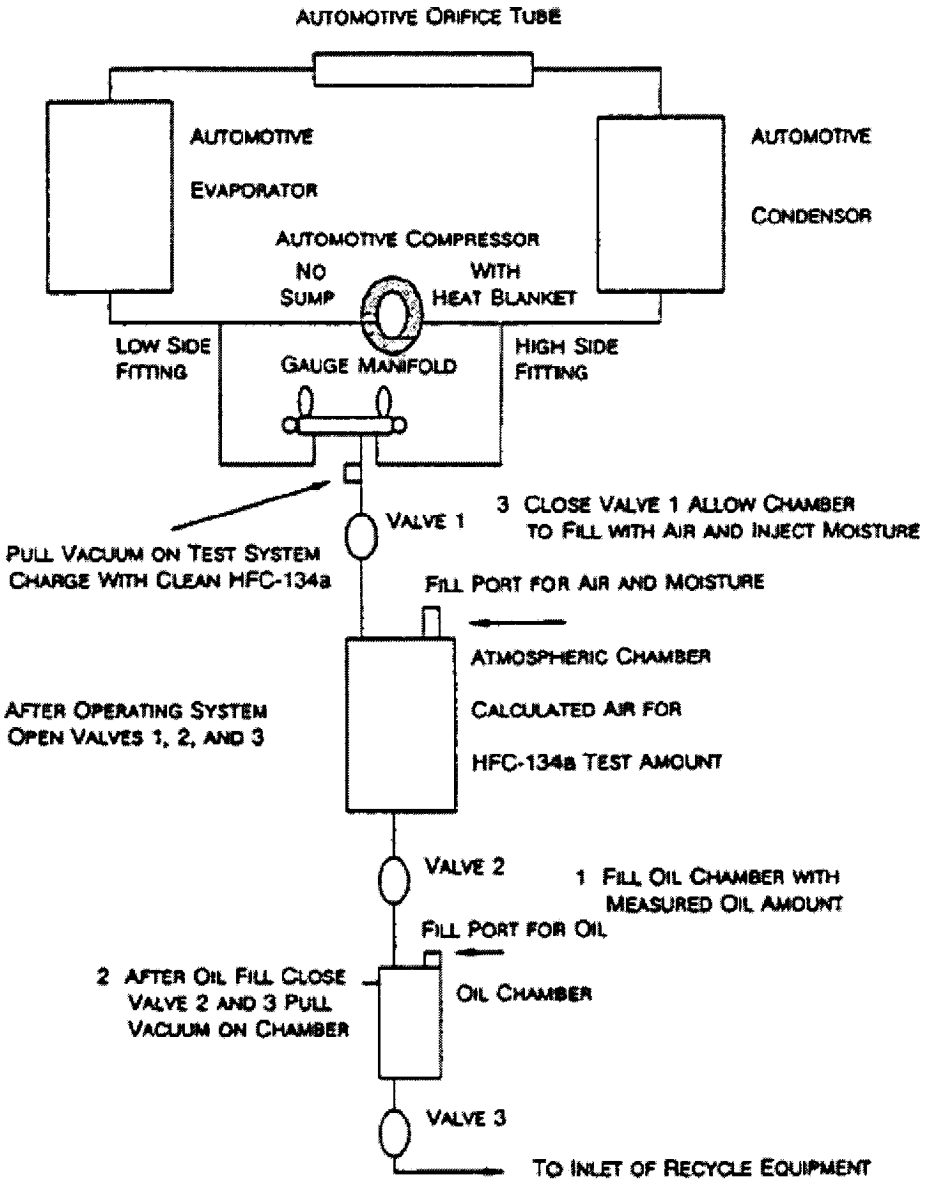


FIGURE 1 - TEST FIXTURE

8.4.2 Following the preconditioning procedure per 8.4.1, 18.2 kg (40 lb) of standard contaminated HFC–134a are to be processed by the equipment.

8.5 Sample Requirements

8.5.1 Samples of the standard contaminated refrigerant from 8.3.1 shall be processed as required in 8.6 and shall be analyzed

after said processing as defined in 8.7, 8.8, and 8.9. Note exception for noncondensable gas determination in 8.9.4.

8.6 Equipment Operating Ambient

8.6.1 The HFC–134a is to be cleaned to the purity level, as defined in SAE J2099, with the equipment operating in a stable ambient of 10, 21, and 49 °C (50, 70 and 120 °F) while processing the samples as defined in 8.4.

8.7 Quantitative Determination of Moisture

8.7.1 The recycled liquid phase sample of HFC–134a shall be analyzed for moisture content via Karl Fischer coulometric titration, or an equivalent method. The Karl Fischer apparatus is an instrument for precise determination of small amounts of water dissolved in liquid and/or gas samples.

8.7.2 In conducting this test, a weighed sample of 30 to 130 g is vaporized directly into the Karl Fischer anolyte. A coulometric titration is conducted and the results are reported as parts per million moisture (weight).

8.8 Determination of Percent Lubricant

8.8.1 The amount of lubricant in the recycled HFC–134a sample shall be determined via gravimetric analysis. The methodology must account for the hygroscopicity of the lubricant.

8.8.2 Following venting of noncondensable gases in accordance with the manufacturer's operating instructions, the refrigerant container shall be shaken for 5 min prior to extracting samples for testing.

8.8.3 A weighed sample of 175 to 225 g of liquid HFC–134a is allowed to evaporate at room temperature. The percent lubricant is calculated from weights of the original sample and the residue remaining after evaporation.

8.9 Noncondensable Gases—Testing for Amount

8.9.1 The amount of noncondensable gases shall be determined by gas chromatography. A sample of vaporized refrigerant liquid shall be separated and analyzed by gas chromatography. A Porapak Q column at 130 °C (266 °F) and a hot wire detector may be used for the analysis.

8.9.2 This test shall be conducted on liquid phase samples of recycled refrigerant taken from a full container as defined in 7.2 within 30 min following the proper venting of noncondensable gases.

8.9.3 The liquid phase samples in 8.9.2 shall be vaporized completely prior to gas chromatographic analysis.

8.9.4 This test shall be conducted at 10 and 49 °C (50 and 120 °F) and may be performed in conjunction with the testing defined in 8.6. The equipment shall process at least 13.6 kg (30 lb) of standard contaminated refrigerant for this test.

8.9.5 The equipment shall be capable of charging refrigerant into systems with various lubrication types and shall deliver less than 1% by weight residual oil during system charge if the machine permits oil charging with refrigerant (due to residual oil in the service hoses and recovery unit refrigerant circuit from prior recovery, diagnostics and oil injection. This shall be determined during SAE J2099 testing.)

9. Recharging the System

9.1 It is the responsibility of the equipment manufacturer to ensure that the vacuum removal performance leaves the system 98% free of NCGs before recharging, following recovery and recycle under the provisions of this document.

The equipment must be capable of both indicating and recharging the system to within 15 g (0.50 oz) of vehicle manufacturer's specifications. The laboratory shall test for this capability by choosing a charge amount that is within the range of the vehicle manufacturer's specifications. The equipment must indicate and charge the system with that chosen amount, within ±15 g (0.5 oz).

*Example:* If 500 g is chosen, the actual and indicated charge must be 485 to 515 g, with any difference between actual and indicated charge within the laboratory scale accuracy requirements of this standard. If a scale is used in the machine, the equipment manufacturer shall provide a method or service for the technician to check scale accuracy, and include any necessary accuracy-checking device (such as a calibration weight(s)) with the machine. If a mass flow system is used for charge determination, it must maintain accuracy equal to the 15 g (0.50 oz) specification. The equipment manufacturer shall provide a method for checking accuracy and include any necessary accuracy testing device(s) with the machine. If the accuracy testing device(s) for a scale or mass flow machine includes a consumable, the manufacturer shall include a quantity of replacement or refill devices for five years of periodic testing as recommended.

9.2 If any other system is used for charge determination, such as a positive displacement pump, the equipment manufacturer shall provide a method and any needed device(s) to check accuracy that is/are appropriate for its method of operation, including any temperature-compensating trim if used.

10. Equipment Test Procedure by Laboratory for Recovery/Recycling and Recovery/Recycling/Recharging Machines

10.1 Preliminary: Ambient (in shop) temperature shall be 21 to 24 °C (70 to 75 °F). Test vehicle shall be ''overnight cold'' (not run for at least eight hours).

10.2 The machine must have a self-contained provision for checking accuracy of

the indicated amount of refrigerant recovered in liquid or vapor or mixture form(s) from a vehicle system and (if applicable) charged into a vehicle, and adjusting if necessary, to meet requirements of 9.1, 9.2. Therefore: If the machine uses a scale for that purpose, check the accuracy of that scale and make any adjustment if necessary. If an alternative method of measuring refrigerant is used, follow the equipment manufacturer's procedure for ensuring accuracy. Next, move the machine, such as by rolling it, along the floor, a minimum of 20 feet (6.1 meters) within 10 seconds. Follow with the test procedure in 10.3, then 10.4 or 10.5.

10.3 Test Procedure

If desired, this test procedure may be preceded by engine/system operation for up to 15 minutes, up to 2000 rpm.

1. You must start with an empty system, using this method: (a) Operate machine to recover refrigerant, per equipment manufacturer's instructions. (b) Deep-vacuum system to a minimum of 710 mm (28 in) of mercury. (c) Monitor vacuum for decay, checking every 20 minutes. If decay exceeds 75 mm (3 in), deep vacuum the system again. When system holds 710 mm (28 in) 75 mm (3 in) of mercury vacuum for three hours, it is considered empty.

2. Place machine on a platform scale with the capacity to weigh the recovery/recycle/recharge machine, and with the resolution and accuracy of within ±3 g (.006 lb) in the range of the machine's weight. Weight should include the machine's service hoses draped over the machine, and with the machine's oil reservoir removed. If necessary to add oil to vehicle system as a result of a system operation preparatory to the recovery process, inject the needed quantity through the service valve at this time.

3. Record weight of machine in as weight A.

4. Reconnect service hoses to the test vehicle.

5. Follow the equipment manufacturer's specified procedure for charging the vehicle manufacturer's recommended amount of refrigerant into the system. Note: if this does not apply to the machine under test, *i.e.* a recovery/recycling only machine, the use of charging equipment that meets this standard and the platform scale shall be used to verify the accuracy of the charge.

6. Disconnect the service hoses from the test vehicle and drape them on the machine. Check and record the weight of the machine. Record this weight as weight B. The difference between weight A and weight B should be equal to the recommended charge that was installed per the machine's display, within 15 g (0.5 oz). If the difference is greater than 15 g (±3 g), the machine fails the charge accuracy test, and no other tests shall be performed at that time. The manufacturer must document changes made to improve accuracy and furnish them to the laboratory prior to a new test. Exception: If the maximum deviation is no more than a total of 20 g, the calibration of the scale or other measuring system may be rechecked and readjusted once, and the entire test repeated just once.

10.4 Recovery Test Using a Vehicle

1. Following a successful system charge, the system and engine shall be run for 15 minutes at 2000 rpm to circulate oil and refrigerant, following which engine and system shall rest for eight hours. Then the laboratory may begin the recovery test. If the machine manufacturer specifies, operate the engine/system for up to 15 minutes, at up to 2000 rpm, then shut off engine/system.

2. If the machine has an automatic air purge, disable it. Check the weight of the machine with the platform scale (service hoses draped over machine, oil reservoir removed). Record the number as Weight C. Reinstall oil reservoir if it had been removed in the recovery procedure.

3. Start timer. Connect service hoses to system of test vehicle and perform recovery per the equipment manufacturer's instructions. The vehicle system service valves' cores must remain in the fittings for this procedure.

4. When recovery is completed, including from service hoses if that is part of the recommended procedure, disconnect hoses and drape over machine. Stop timer. The elapsed time shall be 30.0 minutes or less. If it is in excess of this time, the machine fails the test and no retest is allowed. The manufacturer must document changes made to the machine to improve its performance before a new test is allowed, and furnish them to the laboratory.

5. If the recovery is completed in no more than the 30.0 minutes, measure the oil level in the reservoir, remove the reservoir and then determine the amount of refrigerant recovered, as detailed in Nos. 6 and 7: As measured by the machine and also by noting the weight of the platform scale, which shall be recorded as Weight D.

6. The platform scale shall indicate that a minimum of 95% of the amount charged into the system has been recovered. If the platform scale indicates a lower percentage has been recovered, the machine fails the recovery test.

7. The machine display shall indicate that a minimum of 95.0% of the amount charged into the system has been recovered, within a tolerance of ±30 g (1 oz) when compared with the platform scale (Weight D minus Weight C). The 30 g (1 oz) tolerance may produce a machine display reading that is below the 95.0% recovery. If a greater difference between machine and platform scale occurs, the machine fails the recovery test.

10.5 Recovery Test Fixture Test Option

If an equipment manufacturer chooses, as an alternative to the actual vehicle, it may certify to SAE J2788 with a laboratory fixture that is composed entirely of all the original equipment parts of a single model year for the 3.0 lb capacity front/rear A/C system in the 2005–07 Chevrolet Suburban. All parts must be those OE-specified for one model year system and no parts may be eliminated or bypassed from the chosen system, or reproduced by a non-OE source. No parts may be added and/or relocated from the OE position in the 2005–07 Suburban. No parts may be modified in any way that could affect system performance for testing under this standard, except adding refrigerant line bends and/or loops to make the system more compact. Reducing the total length of the lines, however, is not permitted. The fixture system shall be powered by an electric motor, run at a speed not to exceed 2000 rpm, and for this test option, no system warm-up or equivalent procedure may be used. The certifying laboratory shall maintain records of all parts purchased, including invoices and payments. The assembly of the parts shall, as an outside-the-vehicle package, duplicate the OE system and its routing, including bends, except for permitted additions of bends and/or loops in refrigerant lines. Aside from the absence of engine operation and the limitations posed by the standard and the use of the electric motor, the test shall otherwise be the same as the test on the Suburban, including test temperature.

[72 FR 63495, Nov. 9, 2007]

## APPENDIX D TO SUBPART B OF PART 82—SAE J2810 STANDARD FOR RECOVERY ONLY EQUIPMENT FOR HFC–134a REFRIGERANT

FOREWORD

This Appendix establishes the specific minimum equipment requirements for the recovery of HFC–134a that has been directly removed from, motor vehicle air-conditioning systems.

*1. Scope*

The purpose of this SAE Standard is to provide minimum performance and operating feature requirements for the recovery of HFC–134a (R–134a) refrigerant to be returned to a refrigerant reclamation facility that will process it to the appropriate ARI 700 Standard or allow for recycling of the recovered refrigerant to SAE J2788 specifications by using SAE J2788-certified equipment. It is not acceptable that the refrigerant removed from a mobile air-conditioning (A/C) system with this equipment be directly returned to a mobile A/C system.

This information applies to equipment used to service automobiles, light trucks, and other vehicles with similar HFC–134a (R–134a) A/C systems.

1.1 Improved refrigerant recovery equipment is required to ensure adequate refrigerant recovery to reduce emissions and provide for accurate recharging of mobile air conditioning systems. Therefore, 12 months following the publication date of this standard, it supersedes SAE J1732.

*2. References*

2.1 Applicable Publications

The following publications form a part of the specification to the extent specified herein. Unless otherwise indicated, the latest revision of SAE publications shall apply.

2.1.1 SAE Publications

Available from SAE, 400 Commonwealth Drive, Warrendale, PA 15096–0001, Tel: 877–606–7323 (inside USA and Canada) or 724–776–4970 (outside USA), *http://www.sae.org*.

SAE J639 Safety Standards for Motor Vehicle Refrigerant Vapor Compressions Systems.

SAE J1739 Potential Failure Mode and Effects Analysis in Design (Design FMEA) and Potential Failure Mode and Effects Analysis in Manufacturing and Assembly Processes (Process FMEA) and Effects Analysis for Machinery (Machinery FMEA).

SAE J1771 Criteria for Refrigerant Identification Equipment for Use with Mobile Air-Conditioning Systems.

SAE J2196 Service Hose for Automotive Air Conditioning.

SAE J2296 Retest of Refrigerant Container.

SAE J2788 HFC–134a (R–134a) Recovery/Recycling Equipment and Recovery/Recycling/Recharging for Mobile Air-Conditioning Systems.

2.1.2 ARI Publication

Available from Air-Conditioning and Refrigeration Institute, 4100 North Fairfax Drive, Suite 200, Arlington, VA 22203, Tel: 703–524–8800, *http://www.ari.org*.

ARI 700 Specifications for Fluorocarbon Refrigerants.

2.1.3 CGA Publication

Available from Compressed Gas Association, 4221 Walney Road, 5th Floor, Chantilly, VA 20151–2923, Tel: 703–788–2700, *http://www.cganet.com*.

CGA S–1.1 Pressure Relief Device Standard Part 1—Cylinders for Compressed Gases.

2.1.4 DOT Specification

Available from the Superintendent of Documents, U.S. Government Printing Office, Mail Stop: SSOP, Washington, DC 20402–9320.

CFR 49, Section 173.304 Shippers—General Requirements for Shipments and Packagings.

2.1.5 UL Publication

Available from Underwriters Laboratories Inc., 333 Pfingsten Road, Northbrook, IL 60062–2096, Tel: 847–272–8800, *http://www.ul.com*.

UL 1769 Cylinder Valves.

*3. Specifications and General Description*

3.1 The equipment must be able to recover (extract) HFC–134a (R–134a) refrigerant from a mobile A/C system per the test procedure of sections 7 and 8.

3.2 The equipment shall be suitable for use in an automotive service garage environment as defined in 6.8.

3.3 Equipment Certification

The equipment shall be certified by an EPA-listed laboratory to meet this standard. SAE J2810.

3.4 Label Requirements

The equipment shall have a label with bold type, minimum 3 mm high, saying ''Design Certified by (certifying agent, EPA listed laboratory) to meet SAE J2810 for use only with HFC–134a (R–134a). If it is to be re-used in an A/C system, the refrigerant recovered with this equipment must be processed to the appropriate ARI 700 specifications or to specifications by using equipment certified to perform to SAE J2788.''

3.5 SAE J1739

Potential Failure Mode and Effects Analysis in Design (Design FMEA), Potential Failure Mode and Effects Analysis in Manufacturing and Assembly Processes (Process FMEA), and Potential Failure Mode and Effects Analysis for Machinery (Machinery FMEA) shall be applied to the design and development of service equipment.

*4. Safety Requirements*

4.1 The equipment must comply with applicable federal, state, and local requirements on equipment related to the handling of HFC–134a (R–134a) material. Safety precautions or notices, labels, related to the safe operation of the equipment shall also be prominently displayed on the equipment and should state ''CAUTION—SHOULD BE OPERATED ONLY BY CERTIFIED PERSONNEL.'' The safety identification shall be located on the front near the controls.

4.2 The equipment must comply with applicable safety standards for the electrical and mechanical systems.

*5. Operating Instructions*

5.1 The equipment manufacturer must provide operating instructions that include information required by SAE J639, necessary maintenance procedures, and source information for replacement parts and repair.

5.1.1 The instruction manual shall include the following information on the lubricant removed. Only new lubricant, as identified by the system manufacturer, should be replaced in the mobile A/C system. Removed lubricant from the system and/or the equipment shall be disposed of in accordance with the applicable federal, state, and local procedures and regulations.

5.2 The equipment must prominently display the manufacturer's name, address, the type of refrigerant it is designed to extract (R–134a), a service telephone number, and any items that require maintenance or replacement that affect the proper operation of the equipment. Operation manuals must cover information for complete maintenance of the equipment to assure proper operation.

5.3 The equipment manufacturer shall provide a warning in the instruction manual regarding the possibility of refrigerant contamination from hydrocarbons, leak sealants and refrigerants other than R–134a in the mobile A/C system being serviced.

5.4 Recovery equipment having refrigerant identification equipment shall meet the requirements of SAE J1771.

5.5 Recovery equipment not having refrigerant identification capability shall have instructions warning the technician that failure to verify that the system contains only R–134a potentially exposes him or her to danger from flammable refrigerants and health hazards from toxic refrigerants. The instructions also shall alert to possible contamination problems to the recovery equipment from sealants and refrigerants other than R–134a, and to the fact that a refrigerant other than R–134a would require special handling by someone with specific expertise and equipment.

*6. Function Description*

6.1 The equipment must be capable of continuous operation in ambient temperatures of 10 °C (50 °F) to 49 °C (120 °F). Continuous is defined as completing recovery operation with no more than a brief reset between servicing vehicles, and shall not include time delays for allowing a system to outgas (which shall be part of the recovery period provided by this standard).

6.1.1 The equipment shall demonstrate ability to recovery a minimum of 95.0% of the refrigerant from the test vehicle in 30.0 minutes or less, without prior engine operation (for previous eight hours minimum), external heating or use of any device (such as shields, reflectors, special lights, etc.), which could heat components of the system.

The recovery procedure shall be based on a test at 21 °C to 24 °C (70 °F to 75 °F) ambient temperature. The test system for qualifying shall be a 1.4 kg (3.0 lbs) capacity orifice tube/accumulator system in a 2005–07 Chevrolet Suburban with front and rear A/C or the test option described in section 9.

6.1.2 The equipment shall demonstrate ability to recover a minimum of 85% of the refrigerant from the test vehicle or system of 6.1.1. in 30.0 minutes or less, at an ambient temperature of 10 °C to 13 °C (50 °F to 55 °F), subject to the same restrictions regarding engine operation and external heating.

6.1.3 During recovery operation, the equipment shall provide overfill protection so that the liquid fill of the storage container does not exceed 80% of the tank's rated volume at 21 °C (70 °F). This will ensure that the container meets Department of Transportation (DOT) Standard, CFR Title 49, section 173.304 and the American Society of Mechanical Engineers.

6.1.4 Portable refillable tanks or containers used in conjunction with this equipment must be labeled ''HFC–134a (R–134a) and meet applicable Department of Transportation (DOT) or Underwriters Laboratories (UL) Standards, and incorporate fittings per SAE J2197.

6.1.5 The cylinder valves shall comply with the standard for cylinder valves UL 1769.

6.1.6 The pressure relief device shall comply with the Pressure Relief Device Standard Part 1—Cylinders for Compressed Gasses CGA Pamphlet S–1.1.

6.1.7 The tank assembly shall be marked to indicate the first retest date, which shall be five years from the date of manufacture. The marking shall indicate that retest must be performed every subsequent five years. SAE J2296 provides an inspection procedure. The marking shall be in letters at least 6 mm (0.25 in) high. If ASME tanks, as defined in UL–1963, are used, they are exempt from the retest requirements.

6.2 If the marketer permits use of a refillable refrigerant tank, a method must be provided (including any necessary fittings) for transfer to a system that ensures proper handling (recycling or other, environmentally-legal disposal).

Restricting the equipment to use of non-refillable tanks eliminates compliance with this provision.

6.3 Prior to testing under this standard, the equipment must be preconditioned with a minimum of 13.6 kg of the standard contaminated HFC–134a (R–134a) at an ambient of 21 °C before starting the test cycle. Sample amounts are not to exceed 1.13 kg with sample amounts to be repeated every 5 min. The test fixture shown in Figure 1 shall be operated at 21 °C. Contaminated HFC–134a (R–134a) samples shall be processed at ambient temperatures of 10 °C and 49 °C (50 °F to 120 °F), without the equipment shutting down due to any safety devices employed in this equipment.

6.3.1 Contaminated HFC–134a (R–134a) sample shall be standard contaminated HFC–134a (R–134a) refrigerant, 13.6 kg sample size, consisting of liquid HFC–134a (R–134a) with 1300 ppm (by weight) moisture at 21 °C (70 °F) and 45 000 ppm (by weight) of oil (polyalkylene glycol oil with 46–160 cst viscosity at 40 °C) and 1000 ppm by weight of noncondensable gases (air).

6.3.2 Portable refillable containers used in conjunction with this equipment must meet applicable DOT Standards. The color of the container must be blue with a yellow top to indicate the container holds used HFC–134a (R–134a) refrigerant. The container must be permanently marked on the outside surface in black print at least 20 mm high, ''CONTAMINATED HFC–134a (R–134a)—DO NOT USE, MUST BE REPROCESSED.''

Figure 1—Test Fixture

6.3.3 The portable refillable container shall have a 1/2 in ACME thread.

6.4 Additional Storage Tank Requirements.

6.4.1 The cylinder valve shall comply with UL 1769.

6.4.2 The pressure relief device shall comply with CGA Pamphlet S–1.1.

6.5 All flexible hoses must meet SAE J2196 for service hoses.

6.6 Service hoses must have shutoff devices located at the connection points to the system being serviced to minimize introduction of noncondensable gases into the recovery equipment during connection and the release of the refrigerant during disconnection.

6.7 The equipment must be able to separate the lubricant from recovered refrigerant and accurately indicate the amount removed from the simulated automotive system during processing in 20 mL (0.7 fl oz) units.

6.7.1 The purpose of indicating the amount of lubricant removed is to ensure that a proper amount of new lubricant is returned to the mobile A/C system for compressor lubrication, if the system is to be charged with equipment meeting SAE J2788.

6.7.2 Refrigerant dissolved in this lubricant must be accounted for to prevent lubricant overcharge of the mobile A/C system.

6.8 The equipment must be capable of continuous operation in ambient temperatures of 10 °C to 49 °C (50 °F to120 °F) and comply with 6.1 to 6.4 of this standard.

6.9 For test validation, the equipment is to be operated according to the manufacturer's instructions.

7. Test Procedure A at 21 °C to 24 °C (70 °F to 75 °F).

The test vehicle (2005–2007 Chevrolet Suburban with rear A/C system—1.4 kg/ 3.0 lb) or laboratory fixture per section 10.5 of SAE

J2788, shall be prepared as for SAE J2788, section 10.3, following Steps 1, 2, 3, 4, and then the following:

7.1 Using a machine certified to SAE J2788 and with the machine on a platform scale with accuracy to within plus/minus 3.0 grams at the weight of the machine, charge the system to the vehicle manufacturer's recommended amount of refrigerant (1.4 kg–3.0 lb). The actual charge amount per the reading on the platform scale shall be used as the basis for the recovery efficiency of the recovery-only machine being tested to this standard. Run the engine (or operate test fixture with electric motor) for up to 15 minutes at up to 2000 rpm to circulate oil and refrigerant. The system then must rest for eight hours.

7.2 Place the recovery machine on the platform scale and record the weight with the hoses draped over the machine. Ambient temperature shall be within the range of 21 °C to 24 °C (70 °F to 75 °F) for this test, which shall be performed without the immediately prior engine operation permitted by SAE J2788, Section 10.3, Step No.1. The only permitted engine operation is as specified in 7.1.

7.3 Start the timer. Connect the service hoses to the system of the test vehicle and perform the recovery per the equipment manufacturer's instructions. The vehicle system's service valve cores must remain in the fittings for this procedure.

7.4 When recovery is completed, including from the service hoses if that is part of the recommended procedure, disconnect the hoses and drape over the machine. Stop the timer. The elapsed time shall be no more than 30 minutes.

7.5 Remove the oil reservoir, empty and reinstall. The platform scale shall indicate that a minimum of 95.0% of the refrigerant has been recovered, based on the charge amount indicated by the platform scale. If the machine has recovered the minimum of 95.0% within the 30.0 minutes, the next test shall be performed. If it fails this test, the marketer of the equipment must document changes to the equipment to upgrade performance before a retest is allowed. If it passes, the laboratory can proceed to Test Procedure B–10 °C to 13 °C (50 °F to 55 °F).

8. Test Procedure B at 10 °C to 13 °C (50 °F to 55 °F).

The test vehicle (2005–2007 Chevrolet Suburban front/rear A/C system (1.4 kg/3.0 lb) or test fixture per section 10.5 of SAE J2788, shall be prepared as per 7.0 and 7.1 of this standard, and then the following:

8.1 Place the recovery machine on the platform scale and record the weight with the hoses draped over the machine.

Ambient temperature at this time shall be no higher than 10 °C to13 °C (50 °F to 55 °F).

8.2 Start the timer. Connect the service hoses to the system of the test vehicle and perform the recovery per the equipment manufacturer's instructions. This also shall be performed without the immediately prior engine operation permitted by SAE J2788, section 10.4, Step No. 1. The vehicle system's service valve cores must remain in the fittings for this procedure.

8.3 When recovery is completed, including from the service hoses if that is part of the recommended procedure, disconnect the hoses and drape over the machine. Stop the timer. The elapsed time shall be no more than 30 minutes.

8.4 Remove the oil reservoir, empty and reinstall. The platform scale shall indicate that a minimum of 85.0% of the refrigerant has been recovered, based on the charge amount indicated by the platform scale. If the machine has recovered the minimum of 85.0% within the 30 minutes, it has passed the test procedure and if it meets all other requirements of this standard, it is certified.

9. Test Option

As in SAE J2788, Section 10.5, as an alternative to a 2005–2007 Chevrolet Suburban with rear A/C (1.4 kg–3.0 lb) system, a laboratory test fixture may be used to certify to SAE J2810 the fixture must be composed entirely of all the original equipment parts of a single model year for the 1.4 kg (3.0 lb) capacity system. All parts must be those OE-specified for one model year system and no parts may be eliminated or bypassed from the chosen system or reproduced from a non-OE source. No parts may be added and/or relocated from the OE position in the 2005–07 Suburban. No parts may be modified in any way that could affect system performance for testing under this standard, except adding refrigerant line bends and/or loops to make the system more compact. Reducing the total length of the lines, however, is not permitted.

The fixture systems for this standard shall not be powered by an electric motor during recovery, although a motor can be used, run at a speed not to exceed 2000 rpm, as part of the preparatory process, including installation of the charge.

[73 FR 34647, June 18, 2008]

## APPENDIX E TO SUBPART B OF PART 82—THE STANDARD FOR AUTOMOTIVE REFRIGERANT RECYCLING EQUIPMENT INTENDED FOR USE WITH BOTH CFC-12 AND HFC-134a

SAE J2211, Recommended Service Procedure for the Containment of HFC-134a, as set forth under Appendix C of this subpart, and SAE J1989, Recommended Service Procedure for the Containment of CFC-12, as set forth under Appendix A of this subpart, also apply to this Appendix E of this subpart.

SAE J1770, issued December, 1995.

AUTOMOTIVE REFRIGERANT RECYCLE EQUIPMENT INTENDED FOR USE WITH BOTH CFC-12 AND HFC-134a

*Foreword*

The purpose of this standard is to establish specific minimum equipment requirements for automotive refrigerant recycling equipment intended for use with both CFC-12 and HFC-134a in a common refrigerant circuit. Establishing such specifications will assure that this equipment does not cross contaminate refrigerant above specified limits when used under normal operating conditions.

*1. Scope*

The purpose of this standard is to establish the specific minimum equipment intended for use with both CFC-12 and HFC-134a in a common refrigerant circuit that has been directly removed from, and is intended for reuse in, mobile air-conditioning (A/C) systems. This standard does not apply to equipment used for CFC-12 and HFC-134a having a common enclosure with separate circuits for each refrigerant.

*2. References*

2.1 Applicable Documents—The following publications form a part of this specification to the extent specified. The latest issue of SAE publications shall apply.

2.1.1 SAE Publications—Available from SAE, 400 Commonwealth Drive, Warrendale, PA 15096–0001.

SAE J2099—Standard of Purity for Recycled HFC-134a for Use in Mobile Air-Conditioning Systems

SAE 1991—Standard of Purity for Use in Mobile Air-Conditioning Systems

SAE J2196—Service Hoses for Automotive Air-Conditioning

SAE J2197—Service Hose Fittings for Automotive Air-Conditioning

SAE J2210—HFC-134a (R–134a) Recycling Equipment for Mobile A/C Systems

SAE J1990—Extraction and Recycling Equipment for Mobile A/C Systems

2.1.2 Compressed Gas Association (CGA) Publications—Available from CGA, 1235 Jefferson Davis Highway, Arlington, VA 22202.

CGA Pamphlet S–1.1—Pressure Relief Device Standard

Part 1—Cylinders for Compressed Gases

2.1.3 DOT Publications—Available from the Superintendent of Documents, U.S. Government Printing Office, Washington, D.C. 20402

2.1.4 UL Publications—Available from Underwriters Laboratories, 333 Pfingsten Road, Northbrook, IL 60062–2096.

UL 1769—Cylinder Valves

UL 1963—Refrigerant Recovery/Recycling Equipment

*3. Specification and General Description*

3.1 The equipment shall be suitable for use in an automotive service garage environment and be capable of continuous operation in ambients from 10 to 49 °C.

3.2 The equipment must be certified that it meets this specification by Underwriters Laboratories Inc. (UL), or by an equivalent Nationally Recognized Testing Laboratory (NRTL).

3.3 The equipment shall have a label which states ''Design Certified by (Certifying Agent) to meet SAE J1770 for recycling CFC-12 and HFC-134a using common refrigerant circuits'', in bold-type letters a minimum of 3 mm in height.

*4. Equipment Requirements*

4.1 General

4.1.1 The equipment shall be capable of preventing cross contamination to the level required by Section 9.2.1.G before an operation involving a different refrigerant can begin. The equipment must prevent initiation of the recovery operation if the equipment is not set up properly.

4.1.2 If an operator action is required to clear the unit prior to reconnecting for a different refrigerant, the equipment shall be provided with a means which indicates which refrigerant was last processed.

4.1.3 Means shall be provided to prevent recovery from both an CFC-12 and HFC-134a mobile air conditioning system concurrently.

4.1.4 Transfer of recycled refrigerant—Recycled refrigerant for recharging and transfer shall be taken from the liquid phase only.

4.2 Seat Leakage Test

4.2.1 Valves, including electrically operated solenoid valves, that are used to isolate CFC-12 and HFC-134a refrigerant circuits, shall have a seat leakage rate not exceeding 15 g/yr (½ oz/yr) before and after 100,000 cycles of operation. This Endurance Test shall be conducted with HFC-134a at maximum operating pressure as determined by sections 8.1 and 8.2. The Seat Leakage Test shall be performed at 1.5 times this pressure at an ambient of 24 °C.

4.3 Interlocks

4.3.1 Electrical interlock devices used to prevent cross contamination of refrigerant shall be operated for 100,000 cycles and there shall be no failure that would permit cross contamination of refrigerant. Solid state inter lock devices shall comply with the Transient Overvoltage Test and the Fast Transient (Electric Noise) Test contained in the Standard for Tests for Safety Related Controls Employing Solid-State Devices, UL 991.

4.4 Noncondensable Gases

4.4.1 The equipment shall either automatically purge noncondensables (NCGs) if

the acceptable level is exceeded or incorporate a device that indicates to the operator the NCG level has been exceeded. A pressure gauge used to indicate an NCG level shall be readable in 1 psig increments. NCG removal must be part of the normal operation of the equipment and instructions must be provided to enable the task to be accomplished within 30 minutes.

4.4.2 Refrigerant loss from noncondensable gas purging, oil removal, and refrigerant clearing shall not exceed more than 5 percent by weight of the total amount of refrigerant through the equipment as detailed in Sections 8.1, 8.2, and 9.2.

4.5 Filter

4.5.1 A 15 micron filter, or other equivalent means, to remove particulates of 15 micrometers spherical diameter or greater shall be located before any manual electrically operated valves that may cause cross contamination.

4.6 Moisture and Acid

4.6.1 The equipment shall incorporate a desiccant package that must be replaced before saturated with moisture, and whose acid capacity is at least 5% by weight of the dry desiccant.

4.6.2 The equipment shall be provided with a moisture detection means that will reliably indicate when moisture in the HFC-134a exceeds 50 ppm, or in the CFC-12 exceeds 15 ppm, and requires the filter/drier replacement.

*5. Operating Instructions*

5.1 The equipment manufacturer must provide operating instructions, including proper attainment of vehicle system vacuum (*i.e.*, when to stop the extraction process, and also to stop the extraction process if it is noticed that the A/C system being serviced has a leak), filter/desiccant replacement, and purging of noncondensable gases (air). The instructions shall indicate that the correct sequence of operation be followed so that the equipment can properly remove contaminates to the acceptable level. Also to be included are any other necessary maintenance procedures, source information for replacement parts and repair, and safety precautions.

5.2 The equipment must prominently display the manufacturer's name, address, the type of refrigerant (CFC-12 and HFC-134a), a service telephone number, and the part number for the replacement filter/drier. Operation manuals must cover information for complete maintenance of the equipment to assure proper operation.

*6. Safety Requirements*

6.1 The equipment must comply with applicable federal, state, and local requirements on equipment related to handling CFC-12 and HFC-134a material. Safety precautions or notices related to the safe operation of the equipment shall be prominently displayed on the equipment and should also state ''CAUTION—SHOULD BE OPERATED BY QUALIFIED PERSONNEL''.

6.2 HFC-134a has been shown to be nonflammable at ambient temperature and atmospheric pressure. The following statement shall be in the operating manual: ''Caution: HFC-134a service equipment or vehicle A/C systems should not be pressure tested or leak tested with compressed air. Some mixtures of air and HFC-134a have been shown to be combustible at elevated pressures (when contained in a pipe or tank). These mixtures may be potentially dangerous, causing injury or property damage. Additional health and safety information may be obtained from refrigerant and lubricant manufacturers.''

*7. Functional Description*

7.1 General

7.1.1 The equipment must be capable of ensuring recovery of the CFC-12 and HFC-134a from the system being serviced, by reducing the system to a minimum of 102 mm of mercury below atmospheric pressure (*i.e.*, vacuum).

7.1.2 The equipment must be compatible with leak detection material that may be present in the mobile A/C system.

7.2 Shut Off Device

7.2.1 To prevent overcharge, the equipment must be equipped to protect the tank used to store the recycled refrigerant with a shutoff device and a mechanical pressure relief valve.

7.3 Storage Tanks

7.3.1 Portable refillable tanks or containers shall be supplied with this equipment and must be labeled ''HFC-134a'' or ''CFC-12'' as appropriate, meet applicable Department of Transportation (DOT) or NRTL's Standards and be adaptable to existing refrigerant service and charging equipment.

7.3.2 The cylinder valve shall comply with the Standard for Cylinder Valves, UL 1769.

7.3.3 The pressure relief device shall comply with the Pressure Relief Device Standard Part 1—Cylinders for Compressed Gases, CGA Pamphlet S–1.1.

7.3.4 The tank assembly shall be marked to indicate the first retest date, which shall be 5 years after the date of manufacture. The marking shall indicate that retest must be performed every subsequent 5 years. The marking shall be in letters at least 6 mm high.

7.4 Overfill Protection

7.4.1 During operation, the equipment must provide overfill protection to assure that during filling or transfer, the tank or storage container cannot exceed 80% of volume at 21.1 °C of its maximum rating as defined by DOT standards, 49 CFR 173.304 and American Society of Mechanical Engineers.

7.5 Hoses and Connections

7.5.1 Separate inlet and outlet hoses with fittings and separate connections shall be provided for each refrigerant circuit.

7.5.2 All flexible hoses and fittings must meet SAE J2196 (for CFC-12) and SAE J2197 (for HFC-134a).

7.5.3 Service hoses must have shutoff devices located within 30 cm of the connection point to the system being serviced.

7.6 Lubricant Separation

7.6.1 The equipment must be able to separate the lubricant from the removed refrigerant and accurately indicate the amount of lubricant removed during the process, in 30 mL (1 fl oz) units. Refrigerant dissolves in lubricant and, as a result, increases the volume of the recovered lubricant sample. This creates the illusion that more lubricant has been recovered that actually has been. The equipment lubricant measuring system must take into account such dissolved refrigerant removed from the A/C system being serviced to prevent overcharging the vehicle system with lubricant.

(NOTE: Use only new lubricant to replace the amount removed the recycling process. Used lubricant should be discarded per applicable federal, state and local requirements.)

7.6.2 The equipment must be provided with some means, such as a lockout device, which will prevent initiation of the recovery operation after switching to the other refrigerant, if the lubricant has not been drained from the oil separator.

*8. Testing*

8.0 Equipment shall be tested in sequence as noted in sections 8.1, 8.2 and 9.2. The filter/drier may be replaced only as noted by section 4.6.2.

8.1 CFC-12 Recycling Cycle

8.1.1 The maximum operating pressure of the equipment shall be determined when recycling CFC-12 while conducting the following tests. This pressure is needed for the Seat Leakage Test, Section 4.2.

8.1.2 The equipment must be preconditioned with 13.6 kg of the standard contaminated CFC-12 (see section 8.1.2a) at an ambient of 21 °C before starting the test cycle. Sample amounts shall be 1.13 kg with sample amounts to be repeated every 5 minutes. The sample method fixture, defined in Figure 1 to Appendix A, shall be operated at 21 °C.

8.1.2a Standard contaminated CFC-12 refrigerant shall consist of liquid CFC-12 with 100 ppm (by weight) moisture at 21 °C and 45,000 ppm (by weight) mineral oil 525 suspension viscosity nominal and 770 ppm by weight of noncondensable gases (air).

8.1.3 The high moisture contaminated sample shall consist of CFC-12 vapor with 1000 ppm (by weight) moisture.

8.1.4 The high oil contaminated sample shall consist of CFC-12 with 200,000 ppm (by weight) mineral oil 525 suspension viscosity nominal.

8.1.5 After preconditioning as stated in section 8.1.2, the test cycle is started, processing the following contaminated samples through the equipment.

A. 13.6 kg (1.13 kg per batch) of standard contaminated CFC-12.

B. 1 kg of high oil contaminated CFC-12.

C. 4.5 kg (1.13 kg per batch) of standard contaminated CFC-12.

D. 1 kg of high moisture contaminated CFC-12.

8.1.6 The CFC-12 is to be cleaned to the minimum purity level, as defined in SAE J1991, with the equipment operating in a stable ambient of 10, 21, and 49 °C and processing the samples as defined in section 8.1.5.

8.2 HFC-134a Recycling Cycle

8.2.1 The maximum operating pressure of the equipment shall be determined when recycling HFC-134a while conducting the following tests. This pressure is needed for the Seat Leakage Test, Section 4.2.

8.2.2 The equipment must be preconditioned by processing 13.6 kg of the standard contaminated HFC-134a (see section 8.2.2a) at an ambient of 21 °C before starting the test cycle. 1.13 kg samples are to be processed at 5 minute intervals. The text fixture shown in Figure 1 to Appendix A shall be operated at 21 °C.

8.2.2a The standard contaminated refrigerant shall consist of liquid HFC-134a with 1300 ppm (by weight) moisture (equivalent to saturation at 38°[100 °F]), 45,000 ppm (by weight) HFC-134a compatible lubricant, and 1000 ppm (by weight) of noncondensable gases (air).

8.2.2b The HFC-134a compatible lubricant referred to in section 8.2.2a shall be a polyalkylene glycol based synthetic lubricant or equivalent, which shall contain no more than 1000 ppm by weight of moisture.

8.2.3 Following the preconditioning procedure per section 8.2.2, 18.2 kg of standard contaminated HFC-134a are to be processed by the equipment at each stable ambient temperature of 10, 21, and 49 °C.

8.2.4 The HFC-134a is to be cleaned to the purity level, as defined in SAE J2099.

*9. Refrigerant Cross Contamination Test*

9.1 General

9.1.1 For test validation, the equipment is to be operated according to the manufacturer's instruction.

9.1.2 The equipment shall clean the contaminated CFC-12 refrigerant to the minimum purity level as defined in Appendix A, when tested in accordance with the requirements in section 8.1.

9.1.3 The equipment shall clean the contaminated HFC-134a refrigerant to the purity

level defined in Appendix C, when tested in accordance with the requirements in section 8.2.

9.2 Test Cycle

9.2.1 The following method shall be used after the tests and requirements in Sections 8.1 and 8.2, respectively, are completed. Following the manufacturer's instructions, the equipment shall be cleared of HFC-134a, prior to beginning step A. The only refrigerant used for this is noted in steps A, C, and E of section 9.2.1. The test fixture shown in Figure 1 to Appendix A shall be used and the test shall be conducted at 10, 21, and 49 °C ambients.

A. A 1.13 kg standard contaminated sample of CFC-12 (see section 8.1.2a) shall be processed by the equipment.

B. Follow manufacturer's instructions to clear the equipment of CFC-12 before processing HFC-134a.

C. Process a 1.13 kg, standard contaminated sample of HFC-134a (see section 8.2.2a) through the equipment.

D. Follow manufacturer's instructions to clear the equipment of HFC-134a before processing CFC-12.

E. Process a 1.13 kg standard contaminated sample of CFC-12 (see section 8.1.2a) through the equipment.

F. Follow manufacturer's instructions to clear the equipment of CFC-12.

G. The amount of cross contaminated refrigerant, as determined by gas chromatography, in samples processed during steps C and E of section 9.2.1., shall not exceed 0.5 percent by weight.

*10. Sample Analysis*

10.1 General

10.1.1 The processed contaminated samples shall be analyzed according to the following procedure.

10.2 Quantitative Determination of Moisture

10.2.1 The recycled liquid phase sample of refrigerant shall be analyzed for moisture content via Karl Fischer coulometer titration or an equivalent method. The Karl Fischer apparatus is an instrument for precise determination of small amounts of water dissolved in liquid and/or gas samples.

10.2.2 In conducting the test, a weighed sample of 30 to 130 g is vaporized directly into the Karl Fischer anolyte. A coulometer titration is conducted and the results are calculated and displayed as parts per million moisture (weight).

10.3 Determination of Percent Lubricant

10.3.1 The amount of lubricant in the recycled sample of refrigerant/lubricant is to be determined by gravimetric analysis.

10.3.2 Following venting of noncondensable, in accordance with the manufacturer's operating instructions, the refrigerant container shall be shaken for 5 minutes prior to extracting samples for test.

10.3.3 A weighed sample of 175 to 225 g of liquid refrigerant/lubricant is allowed to evaporate at room temperature. The percent lubricant is to be calculated from the weight of the original sample and the residue remaining after the evaporation.

10.4 Noncondensable Gas

10.4.1 The amount of noncondensable gas is to be determined by gas chromatography. A sample of vaporized refrigerant liquid shall be separated and analyzed by gas chromatography. A Propak Q column at 130 °C and a hot wire detector may be used for analysis.

10.4.2 This test shall be conducted on liquid phase samples of recycled refrigerant taken from a full container as defined in 7.4 within 30 minutes following the proper venting of noncondensable gases.

10.4.3 The samples shall be shaken for at least 15 minutes prior to testing while at a temperature of 24 °C ±2.8 °C.

10.5 Refrigerant Cross Contamination

10.5.1 The amount of cross contamination of CFC-12 in HFC-134a or HFC-134a in CFC-12 shall not exceed 0.5 percent by weight as determined by gas chromatography. A sample of vaporized refrigerant liquid shall be separated and analyzed by gas chromatography. A 1% SP–1000 on Carbopack B (60/80 mesh) column may be used for the analysis.

[62 FR 68053, Dec. 30, 1997]

## APPENDIX F TO SUBPART B OF PART 82—STANDARD FOR RECOVER-ONLY EQUIPMENT THAT EXTRACTS A SINGLE, SPECIFIC REFRIGERANT OTHER THAN CFC-12 OR HFC-134a

*Foreword*

These specifications are for equipment that recover, but does not recycle, any single, specific automotive refrigerant other than CFC-12 or HFC-134a, including a blend refrigerant.

*1. Scope*

The purpose of this standard is to provide equipment specifications for the recovery of any single, specific refrigerant other than CFC-12 or HFC-134a, including a blend refrigerant, which are either (1) to be returned to a refrigerant reclamation facility that will process the refrigerant to ARI Standard 700–93 or equivalent new product specifications at a minimum, or (2) to be recycled in approved refrigerant recycling equipment, or (3) to be destroyed. This standard applies to equipment used to service automobiles, light trucks, and other vehicles with similar air conditioning systems.

*2. References*

2.1 Applicable Documents—The following publications form a part of this specification

to the extent specified. The latest issue of SAE publications shall apply.

2.1.1 SAE Publications—Available from SAE, 400 Commonwealth Drive, Warrendale, PA 15096–0001. SAE J639—Vehicle Service Coupling. SAE J2196—Service Hoses for Automotive Air-Conditioning (fittings modified)

2.1.2 ARI Publication—Available from Air Conditioning and Refrigeration Institute, 1501 Wilson Boulevard, Sixth Floor, Arlington, VA 22209. ARI 700–93—Specifications for Fluorocarbon Refrigerants.

2.1.3 Compressed Gas Association (CGA) Publications—Available from CGA, 1235 Jefferson Davis Highway, Arlington, VA 22202. CGA Pamphlet S–1.1—Pressure Relief Device Standard Part 1—Cylinders for Compressed Gases.

2.1.4 DOT Publications—Available from the Superintendent of Documents, U.S. Government Printing Office, Washington, D.C. 20402.

DOT Standard, 49 CFR 173.304—Shippers—General Requirements for Shipments and Packagings.

2.1.5 UL Publications—Available from Underwriters Laboratories, 333 Pfingsten Road, Northbrook, IL 60062–2096.

UL 1769—Cylinder Valves.

UL 1963—Refrigerant Recovery Recycling Equipment.

*3. Specifications and General Description*

3.1 The equipment must be able to extract from a mobile air conditioning system the refrigerant other than CFC-12 or HFC-134a to which the equipment is dedicated.

3.2 The equipment shall be suitable for use in an automotive service garage environment as defined in section 6.8.

3.3 The equipment discharge or transfer fitting shall be unique to prevent the unintentional use of the extracted refrigerant for recharging auto air conditioners.

3.4 Equipment Certification-The equipment shall be certified by Underwriters Laboratories or an—equivalent certifying laboratory to meet this standard.

3.5 Label Requirements—The equipment shall have a label ''Designed Certified by (Company Name) to meet EPA requirements for use only with (the applicable refrigerant). The refrigerant from this equipment must be processed to ARI 700–93 specifications or equivalent new product specifications before reuse in a mobile air-conditioning system.'' The minimum letter size shall be bold type 3 mm in height.

*4. Safety Requirements*

4.1 The equipment must comply with applicable federal, state, and local requirements on equipment related to the handling of the applicable refrigerant material. Safety precautions or notices or labels related to the safe operation of the equipment shall also be prominently displayed on the equipment and should state ''CAUTION—SHOULD BE OPERATED BY CERTIFIED PERSONNEL.'' The safety identification shall be located on the front near the controls.

4.2 The equipment must comply with applicable safety standards for electrical and mechanical requirements.

*5. Operating Instructions*

5.1 The equipment manufacturer must provide operating instructions that include information equivalent to that required by SAE J1629, necessary maintenance procedures, and source information for replacement parts and repair.

5.1.1 The instruction manual shall include the following information on the lubricant removed: Only new lubricant, as identified by the system manufacturer, should be replaced in the air conditioning system. Removed lubricant from the system and/or the equipment shall be disposed on in accordance with the applicable federal, state, and local procedures and regulations.

5.2 The equipment must prominently display the manufacturer's name, address, the type of refrigerant it is designed to extract, a service telephone number, and any items that require maintenance or replacement that affect the proper operation of the equipment. Operation manuals must cover information for complete maintenance of the equipment to assure proper operation.

*6.1 Functional Description*

6.1 The equipment must be capable of ensuring removal of refrigerant from the system being serviced by reducing the system pressure to a minimum of 102 mm (4 in) of mercury below atmospheric pressure (*i.e.*, to a vacuum). To prevent system delayed outgassing, the unit must have a device that assures that the refrigerant has been recovered from the air-conditioning system.

6.1.1 Testing laboratory certification of the equipment capability is required which shall process contaminated refrigerant samples at specific temperatures.

6.2 The equipment must be preconditioned by processing 13.6 kg (30 lb) of the standard contaminated refrigerant at an ambient of 21 °C (70 °F) before starting the test cycle. Sample amounts are not to exceed 1.13 kg (2.5 lb) with sample amounts to be processed at 5 min. intervals. The test method fixture, depicted in Figure 1 to appendix A of this subpart, shall be operated at 21 °C (70 °F). Contaminated refrigerant samples shall be processed at ambient temperatures of 10 and 49 °C, without equipment shutting due to any safety devices employed in this equipment.

6.2.1 Standard contaminated refrigerant, 13.6 kg (30 lb) sample size, shall consist of liquid refrigerant with 1000 ppm (by weight)

moisture at 21 °C and 45,000 ppm (by weight) of oil (total of one-third mineral oil 525 suspension nominal, one-third PAG with 100 cSt viscosity at 40 °C or equivalent, and one-third POE with 68 cSt viscosity at 40 °C or equivalent) and 1000 ppm by weight of noncondensable gases (air). Refrigerant shall be identified prior to the recovery process to ±2% of the original manufacturer's formulation submitted to, and accepted by, EPA under its Significant New Alternatives Policy program, with the exception that any flammable components shall be identified to ±1%.

6.3 Portable refillable containers used in conjunction with this equipment must meet applicable DOT Standards.

6.3.1 The container color must be gray with a yellow top to identify that it contains used refrigerant. It must be permanently marked on the outside surface in black print at least 20 mm high ''DIRTY [NAME OF REFRIGERANT]—DO NOT USE, MUST BE PROCESSED''.

6.3.2 The portable refillable container shall have a unique thread connection for the specific refrigerant.

6.3.3 During operation, the equipment shall provide overfill protection to assure that the storage container liquid fill does not exceed 80% of the tank's rated volume at 21 °C per DOT Standard, 49 CFR 173.304, and the American Society of Mechanical Engineers.

6.4 Additional Storage Tank Requirements

6.4.1 The cylinder valve shall comply with UL 1769.

6.4.2 The pressure relief device shall comply with CGA Pamphlet S–1.1.

6.4.3 The container assembly shall be marked to indicate the first retest date, which shall be 5 years after date of manufacture. The marking shall indicate that retest must be performed every subsequent 5 years. The marking shall be in letters at least 6 mm high.

6.5 All flexible hoses must meet SAE J2196 for service hoses except that fittings shall be unique to the applicable refrigerant.

6.6 Service hoses must have shutoff devices located within 30 cm of the connection point to the system being serviced to minimize introduction of noncondensable gases into the recovery equipment during connection and the release of the refrigerant during disconnection.

6.7 The equipment must be able to separate the lubricant from the recovered refrigerant and accurately indicate the amount removed from the simulated automotive system during processing in 30 mL units.

6.7.1 The purpose of indicating the amount of lubricant is to ensure that a proper amount of new lubricant is returned to the mobile air conditioning system for compressor lubrication.

6.7.2 Refrigerant dissolved in this lubricant must be accounted for to prevent system lubricant overcharge of the mobile air-conditioning system.

6.8 The equipment must be capable of continuous operation in temperatures of 10 to 49 °C and must comply with 6.1 and 6.2.

7. For test validation, the equipment is to be operated according to the manufacturer's instructions.

*Application*

The purpose of this standard is to provide equipment specifications for the recovery of any refrigerant other than CFC-12 or HFC-134a for return to a refrigerant reclamation facility that will process it to ARI Standard 700–93 (or for recycling in other EPA approved recycling equipment, in the event that EPA in the future designates a standard for equipment capable of recycling refrigerants other than CFC-12 or HFC-134a).

*Reference Section*

SAE J639—Vehicle Service Coupling
SAE J2196—Service Hoses for Automotive Air-Conditioning
ARI 700–93—Specifications for Fluorocarbon Refrigerants
CGA Pamphlet S–1.1—Pressure Relief Device Standard Part 1—Cylinders for Compressed Gases
UL 1769—Cylinder Valves
49 CFR 173.304—Shippers—General Requirements for Shipment and Packagings

[62 FR 68055, Dec. 30, 1997]

## Subpart C—Ban on Nonessential Products Containing Class I Substances and Ban on Nonessential Products Containing or Manufactured With Class II Substances

SOURCE: 58 FR 69675, Dec. 30, 1993, unless otherwise noted.

### § 82.60 Purpose.

The purpose of this subpart is to implement the requirements of sections 608 and 610 of the Clean Air Act as amended in 1990 on emission reductions and nonessential products.

### § 82.62 Definitions.

For purposes of this subpart:

*Chlorofluorocarbon* means any substance listed as Class I group I or Class I group III in 40 CFR part 82, appendix A to subpart A.

*Class II Substance* means any substance designated as class II in 40 CFR part 82, appendix B to subpart A.

*Commercial*, when used to describe the purchaser of a product, means a person that uses the product in the purchaser's business or sells it to another person and has one of the following identification numbers:

(1) A federal employer identification number;

(2) A state sales tax exemption number;

(3) A local business license number; or

(4) A government contract number.

*Consumer*, when used to describe a person taking action with regard to a product, means the ultimate purchaser, recipient or user of a product.

*Distributor*, when used to describe a person taking action with regard to a product means:

(1) The seller of a product to a consumer or another distributor; or

(2) A person who sells or distributes that product in interstate commerce for export from the United States.

*Foam Insulation Product*, when used to describe a product containing or consisting of plastic foam, means a product containing or consisting of the following types of foam:

(1) Closed cell rigid polyurethane foam;

(2) Closed cell rigid polystyrene boardstock foam;

(3) Closed cell rigid phenolic foam; and

(4) Closed cell rigid polyethylene foam when such foam is suitable in shape, thickness and design to be used as a product that provides thermal insulation around pipes used in heating, plumbing, refrigeration, or industrial process systems.

*Hydrochlorofluorocarbon* means any substance listed as class II in 40 CFR part 82, appendix B to subpart A.

*Initial Inventory* means that the original product has completed all of its manufacturing processes and is ready for sale by the manufacturer. Products in initial inventory may be subsequently incorporated into another product by a different manufacturer after purchase. To continue selling products after the effective date of the provisions, the manufacturer or distributor must be able to show, upon request by EPA, that the product was in fact manufactured, and thus placed into initial inventory prior to the effective date. Shipping forms, lot numbers, manufacturer date stamps or codes, invoices, or the like are normally kept records that could be maintained from the time the product was put into initial inventory and may be used to demonstrate when a product was placed in initial inventory.

*Product* means an item or category of items manufactured from raw or recycled materials which is used to perform a function or task.

*Release* means to emit into the environment during the manufacture, use, storage or disposal of a product.

*Space Vehicles* means a man-made device, either manned or unmanned, designed for operation beyond earth's atmosphere. This definition includes integral equipment such as models, mock-ups, prototypes, molds, jigs, tooling, hardware jackets, and test coupons. Also included is auxiliary equipment associated with test, transport, and storage, which through contamination can compromise the space vehicle performance.

[58 FR 69675, Dec. 30, 1993, as amended at 61 FR 64427, Dec. 4, 1996; 66 FR 57522, Nov. 15, 2001]

### § 82.64 Prohibitions.

(a) Effective February 16, 1993, no person may sell or distribute, or offer to sell or distribute, in interstate commerce any of the products identified as being nonessential in § 82.66(a).

(b) Effective February 16, 1993, no person may sell or distribute, or offer to sell or distribute, in interstate commerce any of the products specified in § 82.66(b) to a person who does not provide proof of being a commercial purchaser, as defined under § 82.62.

(c) Effective January 17, 1994, no person may sell or distribute, or offer to sell or distribute, in interstate commerce any of the products identified as being nonessential in § 82.66(c) or § 82.66(d) except as permitted under § 82.65(g).

(d) Except as permitted under § 82.65, effective January 1, 1994, no person may sell or distribute, or offer for sale or distribution, in interstate commerce

any product identified as being nonessential in § 82.70(a) or § 82.70(c).

(e) Except as permitted under § 82.65, effective January 1, 1994, no person may sell or distribute, or offer to sell or distribute, in interstate commerce any of the products specified in § 82.70(b) to a person who does not provide proof of being a commercial purchaser, as defined under § 82.62.

(f) Except as permitted under § 82.65(d), effective January 1, 1996, no person may sell or distribute, or offer for sale or distribution, in interstate commerce any product identified as being nonessential in § 82.70(c)(ii).

(g) It is a violation of this subpart to sell or distribute, or offer for sale or distribution, products effected by the provisions of § 82.68 if the seller knew or should have known that the purchaser was purchasing the product for a prohibited application.

**§ 82.65 Temporary exemptions.**

(a) Any person may sell or distribute, or offer to sell or distribute, in interstate commerce, at any time, any products specified as nonessential in § 82.70 which are manufactured and placed into initial inventory by December 31, 1993.

(b) Any person may sell or distribute, or offer to sell or distribute, in interstate commerce, at any time, any products specified as nonessential in § 82.70 which are manufactured and placed into initial inventory within the date 90 days after the effective date of any federal approvals required for product reformulation, where application for the required approval was timely and properly submitted to the approving federal agency prior to January 1, 1994.

(c)(1) Any person may sell or distribute or offer to sell or distribute, in interstate commerce, at any time, any products specified as nonessential in § 82.70 which are manufactured and placed into initial inventory within 45 days after the receipt of denial by any federal agency of an application for reformulation where initial application for the required approval was timely and properly submitted to the approving federal agency prior to January 1, 1994.

(2) If, within 45 days of receipt of a denial of an application for reformulation, a person submits a new viable application for federal approval of a reformulation, that person may continue to sell and distribute, or offer to sell and distribute until 45 days of denial of that application.

(d) Any person may sell or distribute, or offer to sell or distribute, in interstate commerce, at any time, any integral skin foam utilized to provide for motor vehicle safety in accordance with Federal Motor Vehicle Safety Standards, which are manufactured and placed into initial inventory prior to January 1, 1996.

(e) Any person selling or distributing, or offering to sell or distribute, any product specified in this section after January 1, 1994, or January 1, 1996 for paragraph (d) of this section, or after January 17, 1994 for any product specified in paragraph (g) of this section, must retain proof that such product was manufactured and placed into initial inventory before the relevant date specified in this section. Such proof may take the form of shipping forms, lot numbers, manufacturer date stamps, invoices or equivalent business records.

(f) Any person may sell or distribute, or offer to sell or distribute, in interstate commerce, any aircraft pesticide containing class I until an alternative aircraft pesticide containing class II is available in interstate commerce.

(g) Any person may sell or distribute, or offer to sell or distribute, in interstate commerce, at any time, any replacement part that was manufactured with, or contains a class I substance or was packaged in material that was manufactured with or contains a class I substance only if:

(1) The replacement part was manufactured for use in a single model of a product; and

(2) The replacement part and product model are no longer manufactured; and

(3) The replacement part was placed into initial inventory prior to April 16, 1992.

(h) Any person may sell or distribute, or offer to sell or distribute, in interstate commerce, at any time, any air-conditioning or refrigeration products specified as nonessential in § 82.66(e) that are manufactured and placed into initial inventory by January 14, 2002.

(i) Any person may sell or distribute, or offer to sell or distribute, in interstate commerce, at any time, any integral skin foam products manufactured with a Class I substance for use in commercial aviation and specified as nonessential in § 82.66(c) that are manufactured and placed into initial inventory by January 14, 2002.

[58 FR 69675, Dec. 30, 1993, as amended at 66 FR 57522, Nov. 15, 2001]

### § 82.66 Nonessential Class I products and exceptions.

The following products which release a Class I substance (as defined in 40 CFR part 82, appendix A to subpart A) are identified as being nonessential, and subject to the prohibitions specified under § 82.64—

(a) Any plastic party streamer or noise horn which is propelled by a chlorofluorocarbon, including but not limited to—

(1) String confetti;

(2) Marine safety horns;

(3) Sporting event horns;

(4) Personal safety horns;

(5) Wall-mounted alarms used in factories or other work areas; and

(6) Intruder alarms used in homes or cars.

(b) Any cleaning fluid for electronic and photographic equipment which contains a chlorofluorocarbon:

(1) Including but not limited to liquid packaging, solvent wipes, solvent sprays, and gas sprays; and

(2) Except for those sold or distributed to a commercial purchaser.

(c) Any plastic foam product which is manufactured with or contains a Class I substance; except any plastic foam product blown with CFC-11, but which contains no other Class I substances and where this product is used to provide thermal protection to external tanks for space vehicles;

(d) Any aerosol product or other pressurized dispenser, other than those banned in § 82.64(a) or § 82.64(b), which contains a chlorofluorocarbon,

(1) Including but not limited to household, industrial, automotive and pesticide uses,

(2) Except—

(i) Medical devices listed in 21 CFR 2.125(e);

(ii) Lubricants, coatings or cleaning fluids for electrical or electronic equipment, which contain CFC-11, CFC-12, or CFC-113 for solvent purposes, but which contain no other CFCs;

(iii) Lubricants, coatings or cleaning fluids used for aircraft maintenance, which contain CFC-11 or CFC-113 as a solvent, but which contain no other CFCs;

(iv) Mold release agents used in the production of plastic and elastomeric materials, which contain CFC-11 or CFC-113 as a solvent, but which contain no other CFCs, and/or mold release agents that contain CFC-12 as a propellant, but which contain no other CFCs;

(v) Spinnerette lubricant/cleaning sprays used in the production of synthetic fibers, which contain CFC-114 as a solvent, but which contain no other CFCs, and/or spinnerette lubricant/cleaning sprays which contain CFC-12 as a propellant, but which contain no other CFCs;

(vi) Document preservation sprays which contain CFC-113 as a solvent, but which contain no other CFCs, and/or document preservation sprays which contain CFC-12 as a propellant, but which contain no other CFCs, and which are used solely on thick books, books with coated or dense paper and tightly bound documents; and

(e) Any air-conditioning or refrigeration appliance as defined in CAA 601(l) that contains a Class I substance used as a refrigerant.

[58 FR 69675, Dec. 30, 1993, as amended at 66 FR 57522, Nov. 15, 2001]

### § 82.68 Verification and public notice requirements.

(a) Effective February 16, 1993, any person who sells or distributes any cleaning fluid for electronic and photographic equipment which contains a chlorofluorocarbon must verify that the purchaser is a commercial entity as defined in § 82.62. In order to verify that the purchaser is a commercial entity, the person who sells or distributes this product must request documentation that proves the purchaser's commercial status by containing one or more of the commercial identification

numbers specified in § 82.62(b). The seller or distributor must have a reasonable basis for believing that the information presented by the purchaser is accurate.

(b) Effective February 16, 1993, any person who sells or distributes any cleaning fluid for electronic and photographic equipment which contains a chlorofluorocarbon must prominently display a sign where sales of such product occur which states: ''It is a violation of federal law to sell, distribute, or offer to sell or distribute, any chlorofluorocarbon-containing cleaning fluid for electronic and photographic equipment to anyone who is not a commercial user of this product. The penalty for violating this prohibition can be up to $25,000 per sale. Individuals purchasing such products must present proof of their commercial status in accordance with § 82.68(a).''

(c) Effective January 1, 1994, any person who sells or distributes any aerosol or pressurized dispenser of cleaning fluid for electronic and photographic equipment which contains a class II substance must verify that the purchaser is a commercial entity as defined in § 82.62(b). In order to verify that the purchaser is a commercial entity, the person who sells or distributes this product must request documentation that proves the purchaser's commercial status by containing one or more of the commercial identification numbers specified in § 82.62(b).

(d) Effective January 1, 1994, any person who sells or distributes any aerosol or other pressurized dispenser of cleaning fluid for electronic and photographic equipment which contains a class II substance must prominently display a sign where sales of such product occur which states: ''It is a violation of federal law to sell, distribute, or offer to sell or distribute, any aerosol hydrochlorofluorocarbon-containing cleaning fluid for electronic and photographic equipment to anyone who is not a commercial user of this product. The penalty for violating this prohibition can be up to $25,000 per unit sold. Individuals purchasing such products must present proof of their commercial status in accordance with § 82.68(c).''

(e) Effective January 1, 1994, in order to satisfy the requirements under § 82.68 (b) and (d), any person who sells or distributes cleaning fluids for electronic and photographic equipment which contain a class I substance and those aerosol or pressurized dispensers of cleaning fluids which contain a class II substance, may prominently display one sign where sales of such products occur which states: ''It is a violation of federal law to sell, distribute, or offer to sell or distribute, any chlorofluorocarbon-containing cleaning fluid for electronic and photographic equipment or aerosol hydrochlorofluorocarbon-containing cleaning fluid for electronic and photographic equipment to anyone who is not a commercial user of this product. The penalty for violating this prohibition can be up to $25,000 per unit sold. Individuals purchasing such products must present proof of their commercial status in accordance with 40 CFR 82.68(a) or 82.68(c).''

(f)–(g) [Reserved]

(h) Effective January 1, 1994, any person who sells or distributes any mold release agents containing a class II substance as a propellant must provide written notification to the purchaser prior to the sale that ''It is a violation of federal law to sell mold release agents containing hydrochlorofluorocarbons as propellants to anyone, except for use in applications where no other alternative except a class I substance is available. The penalty for violating this prohibition can be up to $25,000 per unit sold.'' Written notification may be placed on sales brochures, order forms, invoices and the like.

(i) Effective January 1, 1994, any person who sells or distributes any wasp and hornet spray containing a class II substance must provide written notification to the purchaser prior to the sale that ''it is a violation of federal law to sell or distribute wasp and hornet sprays containing hydrochlorofluorocarbons as solvents to anyone, except for use near high-tension power lines where no other alternative except a class I substance is available. The penalty for violating this prohibition can be up to $25,000 per unit sold.'' Written notification may be

placed on sales brochures, order forms, invoices and the like.

[58 FR 69675, Dec. 30, 1993, as amended at 61 FR 64427, Dec. 4, 1996]

### § 82.70 Nonessential Class II products and exceptions.

The following products which release a class II substance (as designated as class II in 40 CFR part 82, appendix B to subpart A) are identified as being nonessential and the sale or distribution of such products is prohibited under § 82.64 (d), (e), or (f)—

(a) Any aerosol product or other pressurized dispenser which contains a class II substance:

(1) Including but not limited to household, industrial, automotive and pesticide uses;

(2) Except—

(i) Medical devices listed in 21 CFR 2.125(e);

(ii) Lubricants, coatings or cleaning fluids for electrical or electronic equipment, which contain class II substances for solvent purposes, but which contain no other class II substances;

(iii) Lubricants, coatings or cleaning fluids used for aircraft maintenance, which contain class II substances for solvent purposes but which contain no other class II substances;

(iv) Mold release agents used in the production of plastic and elastomeric materials, which contain class II substances for solvent purposes but which contain no other class II substances, and/or mold release agents that contain HCFC-22 as a propellant where evidence of good faith efforts to secure alternatives indicates that, other than a class I substance, there are no suitable alternatives;

(v) Spinnerette lubricants/cleaning sprays used in the production of synthetic fibers, which contain class II substances for solvent purposes and/or contain class II substances for propellant purposes;

(vi) Document preservation sprays which contain HCFC-141b as a solvent, but which contain no other class II substance; and/or which contain HCFC-22 as a propellant, but which contain no other class II substance and which are used solely on thick books, books with coated, dense or paper and tightly bound documents;

(vii) Portable fire extinguishing equipment used for non-residential applications; and

(viii) Wasp and hornet sprays for use near high-tension power lines that contain a class II substance for solvent purposes only, but which contain no other class II substances.

(b) Any aerosol or pressurized dispenser cleaning fluid for electronic and photographic equipment which contains a class II substance, except for those sold or distributed to a commercial purchaser.

(c) Any plastic foam product which contains, or is manufactured with, a class II substance,

(1) Including but not limited to household, industrial, automotive and pesticide uses,

(2) Except—

(i) Any foam insulation product, as defined in § 82.62(h); and

(ii) Integral skin foam utilized to provide for motor vehicle safety in accordance with Federal Motor Vehicle Safety Standards until January 1, 1996, after which date such products are identified as nonessential and may only be sold or distributed or offered for sale or distribution in interstate commerce in accordance with § 82.65(d).

[58 FR 69675, Dec. 30, 1993, as amended at 61 FR 64427, Dec. 4, 1996]

## Subpart D—Federal Procurement

SOURCE: 58 FR 54898, Oct. 22, 1993, unless otherwise noted.

### § 82.80 Purpose and scope.

(a) The purpose of this subpart is to require Federal departments, agencies, and instrumentalities to adopt procurement regulations which conform to the policies and requirements of title VI of the Clean Air Act as amended, and which maximize the substitution in Federal procurement of safe alternatives, as identified under section 612 of the Clean Air Act, for class I and class II substances.

(b) The regulations in this subpart apply to each department, agency, and instrumentality of the United States.

### § 82.82 Definitions.

(a) *Class I substance* means any substance designated as class I by EPA pursuant to 42 U.S.C. 7671(a), including but not limited to chlorofluorocarbons, halons, carbon tetrachloride and methyl chloroform.

(b) *Class II substance* means any substance designated as class II by EPA pursuant to 42 U.S.C. 7671(a), including but not limited to hydrochlorofluorocarbons.

(c) *Controlled substance* means a class I or class II ozone-depleting substance.

(d) *Department, agency and instrumentality of the United States* refers to any executive department, military department, or independent establishment within the meaning of 5 U.S.C. 101, 102, and 104(1), respectively, any wholly owned Government corporation, the United States Postal Service and Postal Rate Commission, and all parts of and establishments within the legislative and judicial branches of the United States.

### § 82.84 Requirements.

(a) No later than October 24, 1994, each department, agency and instrumentality of the United States shall conform its procurement regulations to the requirements and policies of title VI of the Clean Air Act, 42 U.S.C. 7671–7671g. Each such regulation shall provide, at a minimum, the following:

(1) That in place of class I or class II substances, or of products made with or containing such substances, safe alternatives identified under 42 U.S.C. 7671k (or products made with or containing such alternatives) shall be substituted to the maximum extent practicable. Substitution is not required for class II substances identified as safe alternatives under 42 U.S.C. 7671k, or for products made with or containing such substances, and such substances may be used as substitutes for other class I or class II substances.

(2) That, consistent with the phase-out schedules for ozone-depleting substances, no purchases shall be made of class II substances, or products containing class II substances, for the purpose of any use prohibited under 42 U.S.C. 7671d(c);

(3) That all active or new contracts involving the performance of any service or activity subject to 42 U.S.C. 7671g or 7671h or regulations promulgated thereunder include, or be modified to include, a condition requiring the contractor to ensure compliance with all requirements of those sections and regulations;

(4) That no purchases shall be made of products whose sale is prohibited under 42 U.S.C. 7671h, except when they will be used by persons certified under section 609 to service vehicles, and no purchase shall be made of nonessential products as defined under 42 U.S.C. 7671i;

(5) That proper labeling under 42 U.S.C. 7671j shall be a specification for the purchase of any product subject to that section.

(b) For agencies subject to the Federal Acquisition Regulation, 48 CFR part 1, amendment of the FAR, consistent with this subpart, shall satisfy the requirement of this section.

### § 82.86 Reporting requirements.

(a) No later than one year after October 22, 1993, each agency, department, and instrumentality of the United States shall certify to the Office of Management and Budget that its procurement regulations have been amended in accordance with this section.

(b) Certification by the General Services Administration that the Federal Acquisition Regulation has been amended in accordance with this section shall constitute adequate certification for purposes of all agencies subject to the Federal Acquisition Regulation.

## Subpart E—The Labeling of Products Using Ozone-Depleting Substances

SOURCE: 60 FR 4020, Jan. 19, 1995, unless otherwise noted.

### § 82.100 Purpose.

The purpose of this subpart is to require warning statements on containers of, and products containing or manufactured with, certain ozone-depleting substances, pursuant to section 611 of the Clean Air Act, as amended.

**§ 82.102 Applicability.**

(a) In the case of substances designated as class I or class II substances as of February 11, 1993, the applicable date of the requirements in this paragraph (a) is May 15, 1993. In the case of any substance designated as a class I or class II substance after February 11, 1993, the applicable date of the requirements in this paragraph (a) is one year after the designation of such substance as a class I or class II substance unless otherwise specified in the designation. On the applicable date indicated in this paragraph (a), the requirements of this subpart shall apply to the following containers and products except as exempted under paragraph (c) of this section:

(1) All containers in which a class I or class II substance is stored or transported.

(2) All products containing a class I substance.

(3) All products directly manufactured with a process that uses a class I substance, unless otherwise exempted by this subpart or, unless the Administrator determines for a particular product that there are no substitute products or manufacturing processes for such product that do not rely on the use of a class I substance, that reduce overall risk to human health and the environment, and that are currently or potentially available. If the Administrator makes such a determination for a particular product, then the requirements of this subpart are effective for such product no later than January 1, 2015.

(b) Applicable January 1, 2015 in any case, or one year after any determination between May 15, 1993 and January 1, 2015, by the Administrator for a particular product that there are substitute products or manufacturing processes for such product that do not rely on the use of a class I or class II substance, that reduce the overall risk to human health and the environment, and that are currently or potentially available, the requirements of this subpart shall apply to the following:

(1) All products containing a class II substance.

(2) All products manufactured with a process that uses a class II substance.

(c) The requirements of this subpart shall not apply to products manufactured prior to May 15, 1993, provided that the manufacturer submits documentation to EPA upon request showing that the product was manufactured prior to that date.

**§ 82.104 Definitions.**

(a) *Class I substance* means any substance designated as class I in 40 CFR part 82, appendix A to subpart A, including chlorofluorocarbons, halons, carbon tetrachloride and methyl chloroform and any other substance so designated by the Agency at a later date.

(b) *Class II substance* means any substance designated as class II in 40 CFR part 82, appendix A to subpart A, including hydrochlorofluorocarbons and any other substance so designated by the Agency at a later date.

(c) *Completely destroy* means to cause the destruction of a controlled substance by one of the five destruction processes approved by the Parties at a demonstrable destruction efficiency of 98 percent or more or a greater destruction efficiency if required under other applicable federal regulations.

(d) *Consumer* means a commercial or non-commercial purchaser of a product or container that has been introduced into interstate commerce.

(e) *Container* means the immediate vessel in which a controlled substance is stored or transported.

(f) *Container containing* means a container that physically holds a controlled substance within its structure that is intended to be transferred to another container, vessel or piece of equipment in order to realize its intended use.

(g) *Controlled substance* means a class I or class II ozone-depleting substance.

(h) *Destruction means* the expiration of a controlled substance, that does not result in a commercially useful end product using one of the following controlled processes in a manner that complies at a minimum with the ''Code of Good Housekeeping'' of Chapter 5.5 of the United Nations Environment Programme (UNEP) report entitled, *Ad-Hoc Technical Advisory Committee on ODS Destruction Technologies*, as well as

the whole of Chapter 5 from that report, or with more stringent requirements as applicable. The report is available from the Environmental Protection Agency, Public Docket A–91–60, 401 M Street, SW., Washington, DC 20460 The controlled processes are:

(1) Liquid injection incineration;

(2) Reactor cracking;

(3) Gaseous/fume oxidation;

(4) Rotary kiln incineration; or

(5) Cement kiln.

(i) *Distributor* means a person to whom a product is delivered or sold for purposes of subsequent resale, delivery or export.

(j) *Export* means the transport of virgin, used, or recycled class I or class II substances or products manufactured or containing class I or class II substances from inside the United States or its territories to persons outside the United States or its territories, excluding United States military bases and ships for on-board use.

(k) *Exporter* means the person who contracts to sell class I or class II substances or products manufactured with or containing class I or class II substances for export or transfers such substances or products to his affiliate in another country.

(l) *Import* means to land on, bring into, or introduce into, or attempt to land on, bring into, or introduce into any place subject to the jurisdiction of the United States whether or not such landing, bringing, or introduction constitutes an importation within the meaning of the customs laws of the United States, with the exception of temporary off-loading of products manufactured with or containers containing class I or class II substances from a ship are used for servicing of that ship.

(m) *Importer* means any person who imports a controlled substance, a product containing a controlled substance, a product manufactured with a controlled substance, or any other chemical substance (including a chemical substance shipped as part of a mixture or article), into the United States. ''Importer'' includes the person primarily liable for the payment of any duties on the merchandise or an authorized agent acting on his or her behalf. The term also includes, as appropriate:

(1) The consignee;

(2) The importer of record listed on U.S. Customs Service forms for the import;

(3) The actual owner if an actual owner's declaration and superseding bond has been filed; or

(4) The transferee, if the right to draw merchandise in a bonded warehouse has been transferred.

(n) *Interstate commerce* means the distribution or transportation of any product between one state, territory, possession or the District of Columbia, and another state, territory, possession or the District of Columbia, or the sale, use or manufacture of any product in more than one state, territory, possession or District of Columbia. The entry points for which a product is introduced into interstate commerce are the release of a product from the facility in which the product was manufactured, the entry into a warehouse from which the domestic manufacturer releases the product for sale or distribution, and at the site of United States Customs clearance.

(o) *Manufactured with a controlled substance* means that the manufacturer of the product itself used a controlled substance directly in the product's manufacturing, but the product itself does not contain more than trace quantities of the controlled substance at the point of introduction into interstate commerce. The following situations are excluded from the meaning of the phrase ''manufactured with'' a controlled substance:

(1) Where a product has not had physical contact with the controlled substance;

(2) Where the manufacturing equipment or the product has had physical contact with a controlled substance in an intermittent manner, not as a routine part of the direct manufacturing process;

(3) Where the controlled substance has been transformed, except for trace quantities; or

(4) Where the controlled substance has been completely destroyed.

(p) *Potentially available* means that adequate information exists to make a determination that the substitute is

technologically feasible, environmentally acceptable and economically viable.

(q) *Principal display panel (PDP)* means the entire portion of the surface of a product, container or its outer packaging that is most likely to be displayed, shown, presented, or examined under customary conditions of retail sale. The area of the PDP is not limited to the portion of the surface covered with existing labeling; rather it includes the entire surface, excluding flanges, shoulders, handles, or necks.

(r) *Product* means an item or category of items manufactured from raw or recycled materials, or other products, which is used to perform a function or task.

(s) *Product containing* means a product including, but not limited to, containers, vessels, or pieces of equipment, that physically holds a controlled substance at the point of sale to the ultimate consumer which remains within the product.

(t) *Promotional printed material* means any informational or advertising material (including, but not limited to, written advertisements, brochures, circulars, desk references and fact sheets) that is prepared by the manufacturer for display or promotion concerning a product or container, and that does not accompany the product to the consumer.

(u) *Retailer* means a person to whom a product is delivered or sold, if such delivery or sale is for purposes of sale or distribution in commerce to consumers who buy such product for purposes other than resale.

(v) *Spare parts* means those parts that are supplied by a manufacturer to another manufacturer, distributor, or retailer, for purposes of replacing similar parts with such parts in the repair of a product.

(w) *Supplemental printed material* means any informational material (including, but not limited to, package inserts, fact sheets, invoices, material safety data sheets, procurement and specification sheets, or other material) which accompanies a product or container to the consumer at the time of purchase.

(x) *Transform* means to use and entirely consume a class I or class II substance, except for trace quantities, by changing it into one or more substances not subject to this subpart in the manufacturing process of a product or chemical.

(y) *Type size* means the actual height of the printed image of each capital letter as it appears on a label.

(z) *Ultimate consumer* means the first commercial or non-commercial purchaser of a container or product that is not intended for re-introduction into interstate commerce as a final product or as part of another product.

(aa) *Warning label* means the warning statement required by section 611 of the Act. The term warning statement shall be synonymous with warning label for purposes of this subpart.

(bb) *Waste* means, for purposes of this subpart, items or substances that are discarded with the intent that such items or substances will serve no further useful purpose.

(cc) *Wholesaler* means a person to whom a product is delivered or sold, if such delivery or sale is for purposes of sale or distribution to retailers who buy such product for purposes of resale.

### § 82.106 Warning statement requirements.

(a) *Required warning statements.* Unless otherwise exempted by this subpart, each container or product identified in § 82.102 (a) or (b) shall bear the following warning statement, meeting the requirements of this subpart for placement and form:

WARNING: Contains [or Manufactured with, if applicable] [*insert name of substance*], a substance which harms public health and environment by destroying ozone in the upper atmosphere.

(b) *Exemptions from warning label requirement.* The following products need not bear a warning label:

(1) Products containing trace quantities of a controlled substance remaining as a residue or impurity due to a chemical reaction, and where the controlled substance serves no useful purpose in or for the product itself. However, if such product was manufactured using the controlled substance, the product is required to be labeled as a ''product manufactured with'' the controlled substance, unless otherwise exempted;

(2) Containers containing a controlled substance in which trace quantities of that controlled substance remain as a residue or impurity;

(3) Waste containing controlled substances or blends of controlled substances bound for discard;

(4) Products manufactured using methyl chloroform or CFC-113 by persons who can demonstrate and certify a 95% reduction in overall usage from their 1990 calendar year usage of methyl chloroform or CFC-113 as solvents during a twelve (12) month period ending within sixty (60) days of such certification or during the most recently completed calendar year. In calculating such reduction, persons may subtract from quantities used those quantities for which they possess accessible data that establishes the amount of methyl chloroform or CFC-113 transformed. Such subtraction must be performed for both the applicable twelve month period and the 1990 calendar year. If at any time future usage exceeds the 95% reduction, all products manufactured with methyl chloroform or CFC-113 as solvents by that person must be labeled immediately. No person may qualify for this exemption after May 15, 1994;

(5) Products intended only for export outside of the United States shall not be considered ''products introduced into interstate commerce'' provided such products are clearly designated as intended for export only;

(6) Products that are otherwise not subject to the requirements of this subpart that are being repaired, using a process that uses a controlled substance.

(7) Products, processes, or substitute chemicals undergoing research and development, by which a controlled substance is used. Such products must be labeled when they are introduced into interstate commerce.

(c) *Interference with other required labeling information.* The warning statement shall not interfere with, detract from, or mar any labeling information required on the labeling by federal or state law.

**§ 82.108 Placement of warning statement.**

The warning statement shall be placed so as to satisfy the requirement of the Act that the warning statement be ''clearly legible and conspicuous.'' The warning statement is clearly legible and conspicuous if it appears with such prominence and conspicuousness as to render it likely to be read and understood by consumers under normal conditions of purchase. Such placement includes, but is not limited to, the following:

(a) *Display panel placement.* For any affected product or container that has a display panel that is normally viewed by the purchaser at the time of the purchase, the warning statement described in § 82.106 may appear on any such display panel of the affected product or container such that it is ''clearly legible and conspicuous'' at the time of the purchase. If the warning statement appears on the principal display panel or outer packaging of any such affected product or container, the warning statement shall qualify as ''clearly legible and conspicuous,'' as long as the label also fulfills all other requirements of this subpart and is not obscured by any outer packaging, as required by paragraph (b) of this section. The warning statement need not appear on such display panel if either:

(1) The warning statement appears on the outer packaging of the product or container, consistent with paragraph (b) of this section, and is clearly legible and conspicuous; or

(2) The warning statement is placed in a manner consistent with paragraph (c) of this section.

(b) *Outer packaging.* If the product or container is normally packaged, wrapped, or otherwise covered when viewed by the purchaser at the time of the purchase the warning statement described in § 82.106 shall appear on any outer packaging, wrapping or other covering used in the retail display of the product or container, such that the warning statement is clearly legible and conspicuous at the time of the purchase. If the outer packaging has a display panel that is normally viewed by

the purchaser at the time of the purchase, the warning statement shall appear on such display panel. If the warning statement so appears on such product's or container's outer packaging, it need not appear on the surface of the product or container, as long as the statement also fulfills all other requirements of this subpart. The warning statement need not appear on such outer packaging if either:

(1) The warning statement appears on the surface of the product or container, consistent with paragraph (a) of this section, and is clearly legible and conspicuous through any outer packaging, wrapping or other covering used in display; or

(2) The warning statement is placed in a manner consistent with paragraph (c) of this section.

(c) *Alternative placement.* The warning statement may be placed on a hang tag, tape, card, sticker, invoice, bill of lading, supplemental printed material, or similar overlabeling that is securely attached to the container, product, outer packaging or display case, or accompanies the product containing or manufactured with a controlled substance or a container containing class I or class II substances through its sale to the consumer or ultimate consumer. For prescription medical products that have been found to be essential for patient health by the Food and Drug Administration, the warning statement may be placed in supplemental printed material intended to be read by the prescribing physician, as long as the following statement is placed on the product, its packaging, or supplemental printed material intended to be read by the patient: ''This product contains [insert name of substance], a substance which harms the environment by depleting ozone in the upper atmosphere.'' In any case, the warning statement must be clearly legible and conspicuous at the time of the purchase.

(d) *Products not viewed by the purchaser at the time of purchase.* Where the purchaser of a product cannot view a product, its packaging or alternative labeling such that the warning statement is clearly legible and conspicuous at the time of purchase, as specified under paragraphs (a), (b), or (c) of this section, the warning statement may be placed in the following manner:

(1) Where promotional printed material is prepared for display or distribution, the warning statement may be placed on such promotional printed material such that it is clearly legible and conspicuous at the time of purchase; or

(2) The warning statement may be placed on the product, on its outer packaging, or on alternative labeling, consistent with paragraphs (a), (b), or (c) of this section, such that the warning statement is clearly legible and conspicuous at the time of product delivery, if the product may be returned by the purchaser at or after the time of delivery or if the purchase is not complete until the time of delivery (e.g., products delivered C.O.D.).

### § 82.110 Form of label bearing warning statement.

(a) *Conspicuousness and contrast.* The warning statement shall appear in conspicuous and legible type by typography, layout, and color with other printed matter on the label. The warning statement shall appear in sharp contrast to any background upon which it appears. Examples of combinations of colors which may not satisfy the proposed requirement for sharp contrast are: black letters on a dark blue or dark green background, dark red letters on a light red background, light red letters on a reflective silver background, and white letters on a light gray or tan background.

(b) *Name of substance.* The name of the class I or class II substance to be inserted into the warning statement shall be the standard chemical name of the substance as listed in 40 CFR part 82, appendix A to subpart A, except that:

(1) The acronym ''CFC'' may be substituted for ''chlorofluorocarbon.''

(2) The acronym ''HCFC'' may be substituted for ''hydrochlorofluorocarbon.''

(3) The term ''1,1,1-trichloroethane'' may be substituted for ''methyl chloroform.''

(c) *Combined statement for multiple class I substances.* If a container containing or a product contains or is manufactured with, more than one

class I or class II substance, the warning statement may include the names of all of the substances in a single warning statement, provided that the combined statement clearly distinguishes which substances the container or product contains and which were used in the manufacturing process.

(d) *Format.* (1) The warning statement shall be blocked within a square or rectangular area, with or without a border. (2) The warning statement shall appear in lines that are parallel to the surrounding text on the product's PDP, display panel, supplemental printed material or promotional printed material.

(e) *Type style.* The ratio of the height of a capital letter to its width shall be such that the height of the letter is no more than 3 times its width; the signal word ''WARNING'' shall appear in all capital letters.

(f) *Type size.* The warning statement shall appear at least as large as the type sizes prescribed by this paragraph. The type size refers to the height of the capital letters. A larger type size materially enhances the legibility of the statement and is desirable.

(1) *Display panel or outer packaging.* Minimum type size requirements for the warning statement are given in Table 1 to this paragraph and are based upon the area of the display panel of the product or container. Where the statement is on outer packaging, as well as the display panel area, the statement shall appear in the same minimum type size as on the display panel.

TABLE 1 TO § 82.110(F)(1)

| | Area of display panel (sq. in.) | | | | | |
|---|---|---|---|---|---|---|
| | 0–2 | >2–5 | >5–10 | >10–15 | >15–30 | >30 |
| Type size (in.)[1] | | | | | | |
| Signal word | 3/64 | 1/16 | 3/32 | 7/64 | 1/8 | 5/32 |
| Statement | 3/64 | 3/64 | 1/16 | 3/32 | 3/32 | 7/64 |

> Means greater than.
[1] Minimum height of printed image of letters.

(2) *Alternative placement.* The minimum type size for the warning statement on any alternative placement which meets the requirements of § 82.108(c) is 3/32 inches for the signal word and 1/16 of an inch for the statement.

(3) *Promotional printed material.* The minimum type size for the warning statement on promotional printed material is 3/32 inches for the signal word and 1/16 of an inch for the statement, or the type size of any surrounding text, whichever is larger.

### § 82.112 Removal of label bearing warning statement.

(a) *Prohibition on removal.* Except as described in paragraph (b) or (c) of this section, any warning statement that accompanies a product or container introduced into interstate commerce, as required by this subpart, must remain with the product or container and any product incorporating such product or container, up to and including the point of sale to the ultimate consumer.

(b) *Incorporation of warning statement by subsequent manufacturers.* A manufacturer of a product that incorporates a product that is accompanied by a label bearing the warning statement may remove such label from the incorporated product if the information on such label is incorporated into a warning statement accompanying the manufacturer's product, or if, pursuant to paragraph (c) of this section, the manufacturer of the product is not required to pass through the information contained on or incorporated in the product's label.

(c) *Manufacturers that incorporate products manufactured with controlled substances.* A manufacturer that incorporates into its own product a component product that was purchased from another manufacturer, was manufactured with a process that uses a controlled substance(s), but does not contain such substance(s), may remove such label from the incorporated product and need not apply a warning statement to its own product, if the

manufacturer does not use a controlled substance in its own manufacturing process. A manufacturer that uses controlled substances in its own manufacturing process, and is otherwise subject to the regulations of this subpart, must label pursuant to § 82.106, but need not include information regrading the incorporated product on the required label.

(d) *Manufacturers, distributors, wholesalers, retailers that sell spare parts manufactured with controlled substances solely for repair.* Manufacturers, distributors, wholesalers, and retailers that purchase spare parts manufactured with a class I substance from another manufacturer or supplier, and sell such spare parts for the sole purpose of repair, are not required to pass through an applicable warning label if such products are removed from the original packaging provided by the manufacturer from whom the products are purchased. Manufacturers of the spare parts manufactured with controlled substances must still label their products; furthermore, manufacturers, importers, and distributors of such products must pass through the labeling information as long as products remain assembled and packaged in the manner assembled and packaged by the original manufacturer. This exemption shall not apply if a spare part is later used for manufacture and/or for purposes other than repair.

### § 82.114 Compliance by manufacturers and importers with requirements for labeling of containers of controlled substances, or products containing controlled substances.

(a) *Compliance by manufacturers and importers with requirements for labeling of containers of controlled substances, or products containing controlled substances.* Each manufacturer of a product incorporating another product or container containing a controlled substance, to which § 82.102 (a)(1), or, (a)(2) or (b)(1) applies, that is purchased or obtained from another manufacturer or supplier, is required to pass through and incorporate the labeling information that accompanies such incorporated product in a warning statement accompanying the manufacturer's finished product. Each importer of a product, or container containing a controlled substance, to which § 82.102 (a)(1), (a)(2), or (b)(1) applies, including a component product or container incorporated into the product, that is purchased from a foreign manufacturer or supplier, is required to apply a label, or to ensure that a label has been properly applied, at the site of U.S. Customs clearance.

(b) *Reliance on reasonable belief.* The manufacturer or importer of a product that incorporates another product container from another manufacturer or supplier may rely on the labeling information (or lack thereof) that it receives with the product, and is not required to independently investigate whether the requirements of this subpart are applicable to such purchased product or container, as long as the manufacturer reasonably believes that the supplier or foreign manufacturer is reliably and accurately complying with the requirements of this subpart.

(c) *Contractual obligations.* A manufacturer's or importer's contractual relationship with its supplier under which the supplier is required to accurately label, consistent with the requirements of this subpart, any products containing a controlled substance or containers of a controlled substance that are supplied to the manufacturer or importer, is evidence of reasonable belief.

### § 82.116 Compliance by manufacturers or importers incorporating products manufactured with controlled substances.

(a) *Compliance by manufacturers or importers incorporating products manufactured with controlled substances, or importing products manufactured with controlled substances.* Each manufacturer or importer of a product incorporating another product to which § 82.102 (a)(3) or (b)(2) applies, that is purchased from another manufacturer or supplier, is not required to pass through and incorporate the labeling information that accompanies such incorporated product in a warning statement accompanying the manufacturer's or importer's finished product. Importers of products to which § 82.102 (a)(3) or (b)(2) applies are required to apply a label, or to ensure that a label has been properly applied at the site of U.S. Customs clearance.

(b) *Reliance on reasonable belief.* The importer of a product purchased or obtained from a foreign manufacturer or supplier, which product may have been manufactured with a controlled substance, may rely on the information that it receives with the purchased product, and is not required to independently investigate whether the requirements of this subpart are applicable to the purchased or obtained product, as long as the importer reasonably believes that there was no use of controlled substances by the final manufacturer of the product being imported.

(c) *Contractual obligations.* An importer's contractual relationship with its supplier under which the supplier is required to accurately label, consistent with the requirements of this subpart, any products manufactured with a controlled substance that are supplied to the importer, or to certify to the importer whether a product was or was not manufactured with a controlled substance is evidence of reasonable belief.

### § 82.118 Compliance by wholesalers, distributors and retailers.

(a) *Requirement of compliance by wholesalers, distributors and retailers.* All wholesalers, distributors and retailers of products or containers to which this subpart applies are required to pass through the labeling information that accompanies the product, except those purchasing from other manufacturers or suppliers spare parts manufactured with controlled substances and selling those parts for the demonstrable sole purpose of repair.

(b) *Reliance on reasonable belief.* The wholesaler, distributor or retailer of a product may rely on the labeling information that it receives with the product or container, and is not required to independently investigate whether the requirements of this subpart are applicable to the product or container, as long as the wholesaler, distributor or retailer reasonably believes that the supplier of the product or container is reliably and accurately complying with the requirements of this subpart.

(c) *Contractual obligations.* A wholesaler, distributor or retailer's contractual relationship with its supplier under which the supplier is required to accurately label, consistent with the requirements of this subpart, any products manufactured with a controlled substance that are supplied to the wholesaler, distributor or retailer is evidence of reasonable belief.

### § 82.120 Petitions.

(a) *Requirements for procedure and timing.* Persons seeking to apply the requirements of this regulation to a product containing a class II substance or a product manufactured with a class I or a class II substance which is not otherwise subject to the requirements, or to temporarily exempt a product manufactured with a class I substance, based on a showing of a lack of currently or potentially available alternatives, from the requirements of this regulation may submit petitions to: Labeling Program Manager, Stratospheric Protection Division, Office of Atmospheric Programs, U.S. Environmental Protection Agency, 6202–J, 1200 Pennsylvania Ave., NW., Washington, DC 20460. Such persons must label their products while such petitions are under review by the Agency.

(b) *Requirement for adequate data.* Any petition submitted under paragraph (a) of this section shall be accompanied by adequate data, as defined in § 82.120(c). If adequate data are not included by the petitioner, the Agency may return the petition and request specific additional information.

(c) *Adequate data.* A petition shall be considered by the Agency to be supported by adequate data if it includes all of the following:

(1) A part clearly labeled ''Section I.A.'' which contains the petitioner's full name, company or organization name, address and telephone number, the product that is the subject of the petition, and, in the case of a petition to temporarily exempt a product manufactured with a class I substance from the labeling requirement, the manufacturer or manufacturers of that product.

(2) For petitions to temporarily exempt a product manufactured with a class I substance only, a part clearly labeled ''Section I.A.T.'' which states the length of time for which an exemption is requested.

(3) A part clearly labeled ''Section I.B.'' which includes the following

statement, signed by the petitioner or an authorized representative:

''I certify under penalty of law that I have personally examined and am familiar with the information submitted in this petition and all attached documents, and that, based on my inquiry of those individuals immediately responsible for obtaining the information, I believe that the submitted information is true, accurate, and complete. I am aware that there are significant penalties for submitting false information.''

(4) A part clearly labeled ''Section I.C.'' which fully explains the basis for the petitioner's request that EPA add the labeling requirements to or remove them from the product which is the subject of the petition, based specifically upon the technical facility or laboratory tests, literature, or economic analysis described in paragraphs (c) (5), (6) and (7) of this section.

(5) A part clearly labeled ''Section II.A.'' which fully describes any technical facility or laboratory tests used to support the petitioner's claim.

(6) A part clearly labeled ''Section II.B.'' which fully explains any values taken from literature or estimated on the basis of known information that are used to support the petitioner's claim.

(7) A part clearly labeled ''Section II.C.'' which fully explains any economic analysis used to support the petitioner's claim.

(d) *Criteria for evaluating petitions.* Adequate data in support of any petition to the Agency to add a product to the labeling requirement or temporarily remove a product from the labeling requirement will be evaluated based upon a showing of sufficient quality and scope by the petitioner of whether there are or are not substitute products or manufacturing processes for such product:

(1) That do not rely on the use of such class I or class II substance;

(2) That reduce the overall risk to human health and the environment; and

(3) That are currently or potentially available.

(e) *Procedure for acceptance or denial of petition.* (1) If a petition submitted under this section contains adequate data, as defined under paragraph (c) of this section, the Agency shall within 180 days after receiving the complete petition either accept the petition or deny the petition.

(2) If the Agency makes a decision to accept a petition to apply the requirements of this regulation to a product containing or manufactured with a class II substance, the Agency will notify the petitioner and publish a proposed rule in the FEDERAL REGISTER to apply the labeling requirements to the product.

(3) If the Agency makes a decision to deny a petition to apply the requirements of this regulation to a product containing or manufactured with a class II substance, the Agency will notify the petitioner and publish an explanation of the petition denial in the FEDERAL REGISTER.

(4) If the Agency makes a decision to accept a petition to temporarily exempt a product manufactured with a class I substance from the requirements of this regulation, the Agency will notify the petitioner and publish a proposed rule in the FEDERAL REGISTER to temporarily exempt the product from the labeling requirements. Upon notification by the Agency, such manufacturer may immediately cease its labeling process for such exempted products.

(5) If the Agency makes a decision to deny a petition to temporarily exempt a product manufactured with a class I substance from the requirements of this regulation, the Agency will notify the petitioner and may, in appropriate circumstances, publish an explanation of the petition denial in the FEDERAL REGISTER.

### § 82.122 Certification, recordkeeping, and notice requirements.

(a) *Certification.* (1) Persons claiming the exemption provided in § 82.106(b)(2) must submit a written certification to the following address: Labeling Program Manager, Stratospheric Protection Division, Office of Atmospheric Programs, 6205–J, 1200 Pennsylvania Ave., NW., Washington, DC 20460.

(2) The certification must contain the following information:

(i) The exact location of documents verifying calendar year 1990 usage and

the 95% reduced usage during a twelve month period;

(ii) A description of the records maintained at that location;

(iii) A description of the type of system used to track usage;

(iv) An indication of which 12 month period reflects the 95% reduced usage, and;

(v) Name, address, and telephone number of a contact person.

(3) Persons who submit certifications postmarked on or before May 15, 1993, need not place warning labels on their products manufactured using CFC-113 or methyl chloroform as a solvent. Persons who submit certifications postmarked after May 15, 1993, must label their products manufactured using CFC-113 or methyl chloroform as a solvent for 14 days following such submittal of the certification.

(4) Persons certifying must also include a statement that indicates their future annual use will at no time exceed 5% of their 1990 usage.

(5) Certifications must be signed by the owner or a responsible corporate officer.

(6) If the Administrator determines that a person's certification is incomplete or that information supporting the exemption is inadequate, then products manufactured using CFC-113 or methyl chloroform as a solvent by such person must be labeled pursuant to § 82.106(a).

(b) *Recordkeeping*. Persons claiming the exemption under section 82.106(b)(2) must retain supporting documentation at one of their facilities.

(c) *Notice Requirements*. Persons who claim an exemption under § 82.106(b)(2) must submit a notice to the address in paragraph (a)(1) of this section within 30 days of the end of any 12 month period in which their usage of CFC-113 or methyl chloroform used as a solvent exceeds the 95% reduction from calendar year 1990.

### § 82.124 Prohibitions.

(a) *Warning statement*—(1) *Absence or presence of warning statement*. (i) Applicable May 15, 1993, except as indicated in paragraph (a)(5) of this section, no container or product identified in § 82.102(a) may be introduced into interstate commerce unless it bears a warning statement that complies with the requirements of § 82.106(a) of this subpart, unless such labeling is not required under § 82.102(c), § 82.106(b), § 82.112 (c) or (d), § 82.116(a), § 82.118(a), or temporarily exempted pursuant to § 82.120.

(ii) On January 1, 2015, or any time between May 15, 1993 and January 1, 2015 that the Administrator determines for a particular product manufactured with or containing a class II substance that there are substitute products or manufacturing processes for such product that do not rely on the use of a class I or class II substance, that reduce the overall risk to human health and the environment, and that are currently or potentially available, no product identified in § 82.102(b) may be introduced into interstate commerce unless it bears a warning statement that complies with the requirements of § 82.106, unless such labeling is not required under § 82.106(b), § 82.112 (c) or (d), § 82.116(a) or § 82.118(a).

(2) *Placement of warning statement*. (i) On May 15, 1993, except as indicated in paragraph (a)(5) of this section, no container or product identified in § 82.102(a) may be introduced into interstate commerce unless it bears a warning statement that complies with the requirements of § 82.108 of this subpart, unless such labeling is not required under § 82.102(c), § 82.106(b), § 82.112 (c) or (d), § 82.116(a), § 82.118(a), or temporarily exempted pursuant to § 82.120.

(ii) On January 1, 2015, or any time between May 15, 1993 and January 1, 2015 that the Administrator determines for a particular product manufactured with or containing a class II substance that there are substitute products or manufacturing processes for such product that do not rely on the use of a class I or class II substance, that reduce the overall risk to human health and the environment, and that are currently or potentially available, no product identified in § 82.102(b) may be introduced into interstate commerce unless it bears a warning statement that complies with the requirements of § 82.108 of this subpart, unless such labeling is not required under § 82.106(b), § 82.112 (c) or (d), § 82.116(a) or § 82.118(a).

(3) *Form of label bearing warning statement*. (i) Applicable May 15, 1993, except

as indicated in paragraph (a)(5) of this section, no container or product identified in § 82.102(a) may be introduced into interstate commerce unless it bears a warning statement that complies with the requirements of § 82.110, unless such labeling is not required pursuant to § 82.102(c), § 82.106(b), § 82.112 (c) or (d), § 82.116(a), § 82.118(a), or temporarily exempted pursuant to § 82.120.

(ii) On January 1, 2015, or any time between May 15, 1993 and January 1, 2015 that the Agency determines for a particular product manufactured with or containing a class II substance, that there are substitute products or manufacturing processes that do not rely on the use of a class I or class II substance, that reduce the overall risk to human health and the environment, and that are currently or potentially available, no product identified in § 82.102(b) may be introduced into interstate commerce unless it bears a warning statement that complies with the requirements of § 82.110, unless such labeling is not required pursuant to § 82.106(b), § 82.112 (c) or (d), § 82.116(a), or § 82.118(a).

(4) On or after May 15, 1993, no person may modify, remove or interfere with any warning statement required by this subpart, except as described in § 82.112.

(5) In the case of any substance designated as a class I or class II substance after February 11, 1993, the prohibitions in paragraphs (a)(1)(i), (a)(2)(i), and (a)(3)(i) of this section shall be applicable one year after the designation of such substance as a class I or class II substance unless otherwise specified in the designation.

## Subpart F—Recycling and Emissions Reduction

SOURCE: 58 FR 28712, May 14, 1993, unless otherwise noted.

### § 82.150 Purpose and scope.

(a) The purpose of this subpart is to reduce emissions of class I and class II refrigerants and their substitutes to the lowest achievable level by maximizing the recapture and recycling of such refrigerants during the service, maintenance, repair, and disposal of appliances and restricting the sale of refrigerants consisting in whole or in part of a class I and class II ODS in accordance with Title VI of the Clean Air Act.

(b) This subpart applies to any person servicing, maintaining, or repairing appliances. This subpart also applies to persons disposing of appliances, including small appliances and motor vehicle air conditioners. In addition, this subpart applies to refrigerant reclaimers, technician certifying programs, appliance owners and operators, manufacturers of appliances, manufacturers of recycling and recovery equipment, approved recycling and recovery equipment testing organizations, persons selling class I or class II refrigerants or offering class I or class II refrigerants for sale, and persons purchasing class I or class II refrigerants.

[69 FR 11978, Mar. 12, 2004]

### § 82.152 Definitions.

*Appliance* means any device which contains and uses a refrigerant and which is used for household or commercial purposes, including any air conditioner, refrigerator, chiller, or freezer.

*Apprentice* means any person who is currently registered as an apprentice in service, maintenance, repair, or disposal of appliances with the U.S. Department of Labor's Bureau of Apprenticeship and Training (or a State Apprenticeship Council recognized by the Bureau of Apprenticeship and Training). If more than two years have elapsed since the person first registered as an apprentice with the Bureau of Apprenticeship and Training (or a State Apprenticeship Council recognized by the Bureau of Apprenticeship and Training), the person shall not be considered an apprentice.

*Approved equipment testing organization* means any organization which has applied for and received approval from the Administrator pursuant to § 82.160.

*Certified refrigerant recovery or recycling equipment* means equipment manufactured before November 15, 1993, that meets the standards in § 82.158(c), (e), or (g); equipment certified by an approved equipment testing organization to meet the standards in § 82.158(b), (d), or (f); or equipment certified pursuant to § 82.36(a).

*Commercial refrigeration* means, for the purposes of § 82.156(i), the refrigeration appliances utilized in the retail food and cold storage warehouse sectors. Retail food includes the refrigeration equipment found in supermarkets, convenience stores, restaurants and other food service establishments. Cold storage includes the equipment used to store meat, produce, dairy products, and other perishable goods. All of the equipment contains large refrigerant charges, typically over 75 pounds.

*Critical component* means, for the purposes of § 82.156(i), a component without which industrial process refrigeration equipment will not function, will be unsafe in its intended environment, and/or will be subject to failures that would cause the industrial process served by the refrigeration appliance to be unsafe.

*Custom-built* means, for the purposes of § 82.156(i), that the equipment or any of its critical components cannot be purchased and/or installed without being uniquely designed, fabricated and/or assembled to satisfy a specific set of industrial process conditions.

*Disposal* means the process leading to and including:

(1) The discharge, deposit, dumping or placing of any discarded appliance into or on any land or water;

(2) The disassembly of any appliance for discharge, deposit, dumping or placing of its discarded component parts into or on any land or water; or

(3) The disassembly of any appliance for reuse of its component parts.

*Follow-up verification test* means, for the purposes of § 82.156(i), those tests that involve checking the repairs within 30 days of the appliance's returning to normal operating characteristics and conditions. Follow-up verification tests for appliances from which the refrigerant charge has been evacuated means a test conducted after the appliance or portion of the appliance has resumed operation at normal operating characteristics and conditions of temperature and pressure, except in cases where sound professional judgment dictates that these tests will be more meaningful if performed prior to the return to normal operating characteristics and conditions. A follow-up verification test with respect to repairs conducted without evacuation of the refrigerant charge means a reverification test conducted after the initial verification test and usually within 30 days of normal operating conditions. Where an appliance is not evacuated, it is only necessary to conclude any required changes in pressure, temperature or other conditions to return the appliance to normal operating characteristics and conditions.

*Full charge* means the amount of refrigerant required for normal operating characteristics and conditions of the appliance as determined by using one or a combination of the following four methods:

(1) Use the equipment manufacturer's determination of the correct full charge for the equipment;

(2) Determine the full charge by making appropriate calculations based on component sizes, density of refrigerant, volume of piping, and other relevant considerations;

(3) Use actual measurements of the amount of refrigerant added or evacuated from the appliance; and/or

(4) Use an established range based on the best available data regarding the normal operating characteristics and conditions for the appliance, where the midpoint of the range will serve as the full charge, and where records are maintained in accordance with § 82.166(q).

*High-pressure appliance* means an appliance that uses a refrigerant with a liquid phase saturation pressure between 170 psia and 355 psia at 104 °F. This definition includes but is not limited to appliances using R–401A, R–409A, R–401B, R–411A, R–22, R–411B, R–502, R–402B, R–408A, and R–402A.

*Industrial process refrigeration* means, for the purposes of § 82.156(i), complex customized appliances used in the chemical, pharmaceutical, petrochemical and manufacturing industries. These appliances are directly linked to the industrial process. This sector also includes industrial ice machines, appliances used directly in the generation of electricity, and ice rinks. Where one appliance is used for both industrial process refrigeration and other applications, it will be considered industrial process refrigeration equipment if 50 percent or more of its

operating capacity is used for industrial process refrigeration.

*Industrial process shutdown* means, for the purposes of § 82.156(i), that an industrial process or facility temporarily ceases to operate or manufacture whatever is being produced at that facility.

*Initial verification test* means, for the purposes of § 82.156(i), those leak tests that are conducted as soon as practicable after the repair is completed. An initial verification test, with regard to the leak repairs that require the evacuation of the appliance or portion of the appliance, means a test conducted prior to the replacement of the full refrigerant charge and before the appliance or portion of the appliance has reached operation at normal operating characteristics and conditions of temperature and pressure. An initial verification test with regard to repairs conducted without the evacuation of the refrigerant charge means a test conducted as soon as practicable after the conclusion of the repair work.

*Leak rate* means the rate at which an appliance is losing refrigerant, measured between refrigerant charges. The leak rate is expressed in terms of the percentage of the appliance's full charge that would be lost over a 12-month period if the current rate of loss were to continue over that period. The rate is calculated using only one of the following methods for all appliances located at an operating facility.

(1) Method 1. (i) Step 1. Take the number of pounds of refrigerant added to the appliance to return it to a full charge and divide it by the number of pounds of refrigerant the appliance normally contains at full charge;

(ii) Step 2. Take the shorter of the number of days that have passed since the last day refrigerant was added or 365 days and divide that number by 365 days;

(iii) Step 3. Take the number calculated in Step 1. and divide it by the number calculated in Step 2.; and

(iv) Step 4. Multiply the number calculated in Step 3. by 100 to calculate a percentage. This method is summarized in the following formula:

$$\text{Leak rate (\% per year)} = \frac{\text{pounds of refrigerant added}}{\text{pounds of refrigerant in full charge}} \times \frac{\text{365 days/year}}{\text{shorter of: \# days since refrigerant last added or 365 days}} \times 100\%$$

(2) Method 2. (i) Step 1. Take the sum of the quantity of refrigerant added to the appliance over the previous 365-day period (or over the period that has passed since leaks in the appliance were last repaired, if that period is less than one year),

(ii) Step 2. Divide the result of Step 1. by the quantity (*e.g.*, pounds) of refrigerant the appliance normally contains at full charge, and

(iii) Step 3. Multiply the result of Step 2. by 100 to obtain a percentage. This method is summarized in the following formula:

$$\text{Leak rate (\% per year)} = \frac{\text{pounds of refrigerant added over past 365 days (or since leaks were last repaired, if that period is less than one year)}}{\text{pounds of refrigerant in full charge}} \times 100\%$$

*Low-loss fitting* means any device that is intended to establish a connection between hoses, appliances, or recovery or recycling machines and that is designed to close automatically or to be closed manually when disconnected, minimizing the release of refrigerant from hoses, appliances, and recovery or recycling machines.

*Low-pressure appliance* means an appliance that uses a refrigerant with a liquid phase saturation pressure below 45 psia at 104 °F. This definition includes but is not limited to appliances using R–11, R–123, and R–113.

*Major maintenance, service, or repair* means any maintenance, service, or repair that involves the removal of any or all of the following appliance components: compressor, condenser, evaporator, or auxiliary heat exchange coil; or any maintenance, service, or repair that involves uncovering an opening of more than four (4) square inches of ''flow area'' for more than 15 minutes.

*Medium-pressure appliance* means an appliance that uses a refrigerant with a liquid phase saturation pressure between 45 psia and 170 psia at 104 °F. This definition includes but is not limited to appliances using R–114, R–124, R–12, R–401C, R–406A, and R–500.

*Motor vehicle air conditioner (MVAC)* means any appliance that is a motor vehicle air conditioner as defined in 40 CFR part 82, subpart B.

*MVAC-like appliance* means mechanical vapor compression, open-drive compressor appliances with a normal charge of 20 pounds or less of refrigerant used to cool the driver's or passenger's compartment of an off-road motor vehicle. This includes the air-conditioning equipment found on agricultural or construction vehicles. This definition is not intended to cover appliances using R–22 refrigerant.

*Normal operating characteristics or conditions* means, for the purposes of § 82.156(i), temperatures, pressures, fluid flows, speeds and other characteristics that would normally be expected for a given process load and ambient condition during operation. Normal operating characteristics and conditions are marked by the absence of atypical conditions affecting the operation of the refrigeration appliance.

*Normally containing* a quantity of refrigerant means containing the quantity of refrigerant within the appliance or appliance component when the appliance is operating with a full charge of refrigerant.

*One-time expansion device* means an appliance that relies on the one-time release of its refrigerant charge to the environment in order to provide a cooling effect.

*Opening an appliance* means any service, maintenance, repair, or disposal of an appliance that would release refrigerant from the appliance to the atmosphere unless the refrigerant was recovered previously from the appliance. Connecting and disconnecting hoses and gauges to and from the appliance to measure pressures within the appliance and to add refrigerant to or recover refrigerant from the appliance shall not be considered ''opening.''

*Parent company* means an individual, corporation, partnership, association, joint-stock company, or an unincorporated organization that can direct or cause the direction of management and policies of another entity, through the ownership of shares or otherwise.

*Person* means any individual or legal entity, including an individual, corporation, partnership, association, state, municipality, political subdivision of a state, Indian tribe, and any agency, department, or instrumentality of the United States, and any officer, agent, or employee thereof.

*Process stub* means a length of tubing that provides access to the refrigerant inside a small appliance or room air conditioner and that can be resealed at the conclusion of repair or service.

*Reclaim* refrigerant means to reprocess refrigerant to all of the specifications in appendix A to 40 CFR part 82, subpart F (based on ARI Standard 700–1995, Specification for Fluorocarbons and Other Refrigerants) that are applicable to that refrigerant and to verify that the refrigerant meets these specifications using the analytical methodology prescribed in section 5 of appendix A of 40 CFR part 82, subpart F.

*Recover* refrigerant means to remove refrigerant in any condition from an appliance and to store it in an external container without necessarily testing or processing it in any way.

*Recovery efficiency* means the percentage of refrigerant in an appliance that is recovered by a piece of recycling or recovery equipment.

*Recycle* refrigerant means to extract refrigerant from an appliance and clean refrigerant for reuse without meeting all of the requirements for

reclamation. In general, recycled refrigerant is refrigerant that is cleaned using oil separation and single or multiple passes through devices, such as replaceable core filter-driers, which reduce moisture, acidity, and particulate matter. These procedures are usually implemented at the field job site.

*Refrigerant* means, for purposes of this subpart, any substance consisting in part or whole of a class I or class II ozone-depleting substance that is used for heat transfer purposes and provides a cooling effect.

*Refrigerant circuit* means the parts of an appliance that are normally connected to each other (or are separated only by internal valves) and are designed to contain refrigerant.

*Self-contained recovery equipment* means refrigerant recovery or recycling equipment that is capable of removing the refrigerant from an appliance without the assistance of components contained in the appliance.

*Small appliance* means any appliance that is fully manufactured, charged, and hermetically sealed in a factory with five (5) pounds or less of a class I or class II substance used as a refrigerant, including, but not limited to, refrigerators and freezers (designed for home, commercial, or consumer use), medical or industrial research refrigeration equipment, room air conditioners (including window air conditioners and packaged terminal air heat pumps), dehumidifiers, under-the-counter ice makers, vending machines, and drinking water coolers.

*Substitute* means any chemical or product, whether existing or new, that is used by any person as an EPA approved replacement for a class I or II ozone-depleting substance in a given refrigeration or air-conditioning end-use.

*Suitable replacement refrigerant* means, for the purposes of § 82.156(i)(7)(i), a refrigerant that is acceptable under section 612(c) of the Clean Air Act Amendments of 1990 and all regulations promulgated under that section, compatible with other materials with which it may come into contact, and able to achieve the temperatures required for the affected industrial process in a technically feasible manner.

*System-dependent recovery equipment* means refrigerant recovery equipment that requires the assistance of components contained in an appliance to remove the refrigerant from the appliance.

*System mothballing* means the intentional shutting down of a refrigeration appliance undertaken for an extended period of time by the owners or operators of that facility, where the refrigerant has been evacuated from the appliance or the affected isolated section of the appliance, at least to atmospheric pressure.

*Technician* means any person who performs maintenance, service, or repair, that could be reasonably expected to release refrigerants from appliances, except for MVACs, into the atmosphere. Technician also means any person who performs disposal of appliances, except for small appliances, MVACs, and MVAC-like appliances, that could be reasonably expected to release refrigerants from the appliances into the atmosphere. Performing maintenance, service, repair, or disposal could be reasonably expected to release refrigerants only if the activity is reasonably expected to violate the integrity of the refrigerant circuit. Activities reasonably expected to violate the integrity of the refrigerant circuit include activities such as attaching and detaching hoses and gauges to and from the appliance to add or remove refrigerant or to measure pressure and adding refrigerant to and removing refrigerant from the appliance. Activities such as painting the appliance, rewiring an external electrical circuit, replacing insulation on a length of pipe, or tightening nuts and bolts on the appliance are not reasonably expected to violate the integrity of the refrigerant circuit. Performing maintenance, service, repair, or disposal of appliances that have been evacuated pursuant to § 82.156 could not be reasonably expected to release refrigerants from the appliance unless the maintenance, service, or repair consists of adding refrigerant to the appliance. Technician includes but is not limited to installers, contractor employees, in-house service personnel, and in some cases owners and/or operators.

*Very high-pressure appliance* means an appliance that uses a refrigerant with a critical temperature below 104 °F or with a liquid phase saturation pressure above 355 psia at 104 °F. This definition includes but is not limited to appliances using R–13 or R–503.

*Voluntary certification program* means a technician testing program operated by a person before that person obtained approval of a technician certification program pursuant to § 82.161(c).

[58 FR 28712, May 14, 1993, as amended at 59 FR 42956, Aug. 19, 1994; 59 FR 55925, Nov. 9, 1994; 60 FR 40439, Aug. 8, 1995; 68 FR 43806, July 24, 2003; 69 FR 11978, Mar. 12, 2004; 70 FR 1991, Jan. 11, 2005; 70 FR 19278, Apr. 13, 2005]

**§ 82.154 Prohibitions.**

(a)(1) Effective June 13, 2005, no person maintaining, servicing, repairing, or disposing of appliances may knowingly vent or otherwise release into the environment any refrigerant or substitute from such appliances, with the exception of the following substitutes in the following end-uses:

(i) Ammonia in commercial or industrial process refrigeration or in absorption units;

(ii) Hydrocarbons in industrial process refrigeration (processing of hydrocarbons);

(iii) Chlorine in industrial process refrigeration (processing of chlorine and chlorine compounds);

(iv) Carbon dioxide in any application;

(v) Nitrogen in any application; or

(vi) Water in any application.

(2) The knowing release of a refrigerant or non-exempt substitute subsequent to its recovery from an appliance shall be considered a violation of this prohibition. De minimis releases associated with good faith attempts to recycle or recover refrigerants or non-exempt substitutes are not subject to this prohibition. Refrigerant releases shall be considered de minimis only if they occur when:

(i) The required practices set forth in § 82.156 are observed, recovery or recycling machines that meet the requirements set forth in § 82.158 are used, and the technician certification provisions set forth in § 82.161 are observed; or

(ii) The requirements set forth in subpart B of this part are observed.

(b) No person may open appliances except MVACs and MVAC-like appliances for maintenance, service, or repair, and no person may dispose of appliances except for small appliances, MVACs, and MVAC-like appliances:

(1) Without observing the required practices set forth in § 82.156; and

(2) Without using equipment that is certified for that type of appliance pursuant to § 82.158.

(c) No person may manufacture or import recycling or recovery equipment for use during the maintenance, service, or repair of appliances except MVACs and MVAC-like appliances, and no person may manufacture or import recycling or recovery equipment for use during the disposal of appliances except small appliances, MVACs, and MVAC-like appliances, unless the equipment is certified pursuant to § 82.158 (b) or (d), as applicable.

(d) Effective June 14, 1993, no person shall alter the design of certified refrigerant recycling or recovery equipment in a way that would affect the equipment's ability to meet the certification standards set forth in § 82.158 without resubmitting the altered design for certification testing. Until it is tested and shown to meet the certification standards set forth in § 82.158, equipment so altered will be considered uncertified for the purposes of § 82.158.

(e) Effective August 12, 1993, no person may open appliances except MVACs for maintenance, service, or repair, and no person may dispose of appliances except for small appliances, MVACs, and MVAC-like appliances, unless such person has certified to the Administrator pursuant to § 82.162 that such person has acquired certified recovery or recycling equipment and is complying with the applicable requirements of this subpart.

(f) Effective August 12, 1993, no person may recover refrigerant from small appliances, MVACs, and MVAC-like appliances for purposes of disposal of these appliances unless such person has certified to the Administrator pursuant to § 82.162 that such person has acquired recovery equipment that meets the standards set forth in § 82.158 (l) and/or (m), as applicable, and that such person is complying with the applicable requirements of this subpart.

(g) No person may sell, distribute, or offer for sale or distribution for use as a refrigerant any class I or class II substance consisting wholly or in part of used refrigerant unless:

(1) The class I or class II substance has been reclaimed as defined in § 82.152 by a person who has been certified as a reclaimer pursuant to § 82.164;

(2) The class I or class II substance was used only in an MVAC or MVAC-like appliance and is to be used only in an MVAC or MVAC-like appliance and recycled in accordance with § 82.34(d);

(3) The class I or class II substance is contained in an appliance that is sold or offered for sale together with the class I or class II substance;

(4) The class I or class II substance is being transferred between or among a parent company and one or more of its subsidiaries, or between or among subsidiaries having the same parent company; or

(5) The class I or class II substance is being transferred between or among a Federal agency or department and a facility or facilities owned by the same Federal agency or department.

(h) [Reserved]

(i) Effective August 12, 1993, no person reclaiming refrigerant may release more than 1.5% of the refrigerant received by them.

(j) Effective November 15, 1993, no person may sell or distribute, or offer for sale or distribution, any appliances, except small appliances, unless such equipment is equipped with a servicing aperture to facilitate the removal of refrigerant at servicing and disposal.

(k) Effective November 15, 1993, no person may sell or distribute, or offer for sale or distribution any small appliance unless such equipment is equipped with a process stub to facilitate the removal of refrigerant at servicing and disposal.

(l) No technician training or testing program may issue certificates pursuant to § 82.161 unless the program complies with all of the standards of § 82.161 and appendix D, and has been granted approval.

(m) No person may sell or distribute, or offer for sale or distribution, any substance that consists in whole or in part of a class I or class II substance for use as a refrigerant to any person unless:

(1) The buyer has been certified as a Type I, Type II, Type III, or Universal technician pursuant to § 82.161;

(2) The buyer complies with § 82.166(b) and employs at least one technician who is certified as a Type I, Type II, Type III, or Universal technician in accordance with § 82.161;

(3) The buyer has been certified in accordance with 40 CFR part 82, subpart B and the refrigerant is either R–12 or an approved substitute consisting wholly or in part of a class I or class II substance for use in motor vehicle air conditioners in accordance with 40 CFR part 82, subpart G;

(4) The buyer complies with § 82.166 (b) and employs at least one technician who is certified in accordance with 40 CFR part 82, subpart B, and the refrigerant is either R–12 or an approved substitute consisting wholly or in part of a class I or class II substance for use in motor vehicle air conditioners pursuant to 40 CFR part 82, subpart G. Nothing in this provision shall be construed to relieve persons of the requirements of § 82.34(b) or § 82.42 (b);

(5) The refrigerant is sold only for eventual resale to certified technicians or to appliance manufacturers (*e.g.*, sold by a manufacturer to a wholesaler, sold by a technician to a reclaimer);

(6) The refrigerant is sold to an appliance manufacturer;

(7) The refrigerant is contained in an appliance with a fully assembled refrigerant circuit; or

(8) The refrigerant is charged into an appliance by a certified technician or an apprentice during maintenance, service, or repair of the appliance.

(n) It is a violation of this subpart to accept a signed statement pursuant to § 82.156(f)(2) if the person knew or had reason to know that such a signed statement is false.

(o) Rules stayed for consideration. Not withstanding any other provisions of this subpart, the effectiveness of 40 CFR 82.154(m), only as it applies to refrigerant contained in appliances without fully assembled refrigerant circuits, is stayed from April 27, 1995, until EPA takes final action on its reconsideration of these provisions. EPA

will publish any such final action in the FEDERAL REGISTER.

(p) No person may manufacture or import one-time expansion devices that contain other than exempted refrigerants.

[58 FR 28712, May 14, 1993, as amended at 59 FR 42956, Aug. 19, 1994; 59 FR 55926, Nov. 9, 1994; 60 FR 14610, Mar. 17, 1995; 60 FR 24680, May 9, 1995; 61 FR 7726, Feb. 29, 1996; 61 FR 68508, Dec. 27, 1996; 68 FR 43806, July 24, 2003; 69 FR 11979, Mar. 12, 2004; 70 FR 19278, Apr. 13, 2005]

### § 82.156 Required practices.

(a) All persons disposing of appliances, except for small appliances, MVACs, and MVAC-like appliances must evacuate the refrigerant, including all the liquid refrigerant, in the entire unit to a recovery or recycling machine certified pursuant to § 82.158. All persons opening appliances except for MVACs and MVAC-like appliances for maintenance, service, or repair must evacuate the refrigerant, including all the liquid refrigerant (except as provided in paragraph (a)(2)(i)(B) of this section), in either the entire unit or the part to be serviced (if the latter can be isolated) to a system receiver (*e.g.*, the remaining portions of the appliance, or a specific vessel within the appliance) or a recovery or recycling machine certified pursuant to § 82.158. A technician must verify that the applicable level of evacuation has been reached in the appliance or the part before it is opened.

(1) Persons opening appliances except for small appliances, MVACs, and MVAC-like appliances for maintenance, service, or repair must evacuate to the levels in table 1 before opening the appliance, unless

(i) Evacuation of the appliance to the atmosphere is not to be performed after completion of the maintenance, service, or repair, and the maintenance, service, or repair is not major as defined at § 82.152; or

(ii) Due to leaks in the appliance, evacuation to the levels in table 1 is not attainable, or would substantially contaminate the refrigerant being recovered; or

(iii) The recycling or recovery equipment was certified pursuant to § 82.158(b)(2). In any of these cases, the requirements of § 82.156(a)(2) must be followed.

(2)(i) If evacuation of the appliance to the atmosphere is not to be performed after completion of the maintenance, service, or repair, and if the maintenance, service, or repair is not major as defined at § 82.152, the appliance must:

(A) Be evacuated to a pressure no higher than 0 psig before it is opened if it is a high- or very high-pressure appliance;

(B) Be pressurized to a pressure no higher than 0 psig before it is opened if it is a low-pressure appliance. Persons must cover openings when isolation is not possible. Persons pressurizing low-pressure appliances that use refrigerants with boiling points at or below 85 degrees Fahrenheit at 29.9 inches of mercury (standard atmospheric pressure), (*e.g.* R–11 and R–123), must not use methods such as nitrogen, that require subsequent purging. Persons pressurizing low-pressure appliances that use refrigerants with boiling points above 85 degrees Fahrenheit at 29.9 inches of mercury, *e.g.*, R–113, must use heat to raise the internal pressure of the appliance as much as possible, but may use nitrogen to raise the internal pressure of the appliance from the level attainable through use of heat to atmospheric pressure; or

(C) For the purposes of oil changes, be evacuated or pressurized to a pressure no higher than 5 psig, before it is opened; or drain the oil into a system receiver to be evacuated or pressurized to a pressure no higher than 5 psig.

(ii) If, due to leaks in the appliance, evacuation to the levels in table 1 is not attainable, or would substantially contaminate the refrigerant being recovered, persons opening the appliance must:

(A) Isolate leaking from non-leaking components wherever possible;

(B) Evacuate non-leaking components to be opened to the levels specified in table 1; and

(C) Evacuate leaking components to be opened to the lowest level that can be attained without substantially contaminating the refrigerant. In no case shall this level exceed 0 psig.

(iii) If the recycling or recovery equipment was certified pursuant to

§ 82.158(b)(2), technicians must follow the manufacturer's directions for achieving the required recovery efficiency.

(3) Persons disposing of appliances except for small appliances, MVACs, and MVAC-like appliances, must evacuate to the levels in table 1 unless, due to leaks in the appliance, evacuation to the levels in table 1 is not attainable, or would substantially contaminate the refrigerant being recovered. If, due to leaks in the appliance, evacuation to the levels in table 1 is not attainable, or would substantially contaminate the refrigerant being recovered, persons disposing of the appliance must:

(i) Isolate leaking from non-leaking components wherever possible;

(ii) Evacuate non-leaking components to the levels specified in table 1; and

(iii) Evacuate leaking components to the lowest level that can be attained without substantially contaminating the refrigerant. In no case shall this level exceed 0 psig.

TABLE 1—REQUIRED LEVELS OF EVACUATION FOR APPLIANCES

[Except for small appliances, MVACs, and MVAC-like appliances]

| Type of appliance | Inches of Hg vacuum (relative to standard atmospheric pressure of 29.9 inches Hg) | |
|---|---|---|
| | Using recovery or recycling equipment manufactured or imported before November 15, 1993 | Using recovery or recycling equipment manufactured or imported on or after November 15, 1993 |
| Very high-pressure appliance | 0 | 0 |
| High-pressure appliance, or isolated component of such appliance, normally containing less than 200 pounds of refrigerant. | 0 | 0 |
| High-pressure appliance, or isolated component of such appliance, normally containing 200 pounds or more of refrigerant. | 4 | 10 |
| Medium-pressure appliance, or isolated component of such appliance, normally containing less than 200 pounds of refrigerant. | 4 | 10 |
| Medium-pressure appliance, or isolated component of such appliance, normally containing 200 pounds or more of refrigerant. | 4 | 15 |
| Low-pressure appliance | 25 | 25 mm Hg absolute |

(4) Persons opening small appliances for maintenance, service, or repair must:

(i) When using recycling and recovery equipment manufactured before November 15, 1993, recover 80% of the refrigerant in the small appliance; or

(ii) When using recycling or recovery equipment manufactured on or after November 15, 1993, recover 90% of the refrigerant in the appliance when the compressor in the appliance is operating, or 80% of the refrigerant in the appliance when the compressor in the appliance is not operating; or

(iii) Evacuate the small appliance to four inches of mercury vacuum.

(5) Persons opening MVAC-like appliances for maintenance, service, or repair may do so only while properly using, as defined at § 82.32(e), recycling or recovery equipment certified pursuant to § 82.158 (f) or (g), as applicable.

(b) All persons opening appliances except for small appliances, MVACs, and MVAC-like appliances for maintenance, service, or repair and all persons disposing of appliances except small appliances, MVACs, and MVAC-like appliances must have at least one piece of certified, self-contained recovery or recycling equipment available at their place of business. Persons who maintain, service, repair, or dispose of only appliances that they own and that contain pump-out units are exempt from this requirement. This exemption does not relieve such persons from other applicable requirements of this section.

(c) System-dependent equipment shall not be used with appliances normally containing more than 15 pounds of refrigerant, unless the system-dependent equipment is permanently attached to the appliance as a pump-out unit.

(d) All recovery or recycling equipment shall be used in accordance with the manufacturer's directions unless such directions conflict with the requirements of this subpart.

(e) Refrigerant may be returned to the appliance from which it is recovered or to another appliance owned by the same person without being recycled or reclaimed, unless the appliance is an MVAC or MVAC-like appliance.

(f) Effective July 13, 1993, persons who take the final step in the disposal process (including but not limited to scrap recyclers and landfill operators) of a small appliance, room air conditioning, MVACs, or MVAC-like appliances must either:

(1) Recover any remaining refrigerant from the appliance in accordance with paragraph (g) or (h) of this section, as applicable; or

(2) Verify that the refrigerant has been evacuated from the appliance or shipment of appliances previously. Such verification must include a signed statement from the person from whom the appliance or shipment of appliances is obtained that all refrigerant that had not leaked previously has been recovered from the appliance or shipment of appliances in accordance with paragraph (g) or (h) of this section, as applicable. This statement must include the name and address of the person who recovered the refrigerant and the date the refrigerant was recovered or a contract that refrigerant will be removed prior to delivery.

(3) Persons complying with paragraph (f)(2) of this section must notify suppliers of appliances that refrigerant must be properly removed before delivery of the items to the facility. The form of this notification may be warning signs, letters to suppliers, or other equivalent means.

(g) All persons recovering refrigerant from MVACs and MVAC-like appliances for purposes of disposal of these appliances must reduce the system pressure to or below 102 mm of mercury vacuum, using equipment that meets the standards set forth in § 82.158(l).

(h) All persons recovering the refrigerant from small appliances for purposes of disposal of these appliances must either:

(1) Recover 90% of the refrigerant in the appliance when the compressor in the appliance is operating, or 80% of the refrigerant in the appliance when the compressor in the appliance is not operating; or

(2) Evacuate the small appliance to four inches of mercury vacuum.

(i)(1) Owners or operators of commercial refrigeration equipment normally containing more than 50 pounds of refrigerant must have leaks repaired in accordance with paragraph (i)(9) of this section, if the appliance is leaking at a rate such that the loss of refrigerant will exceed 35 percent of the total charge during a 12-month period, except as described in paragraphs (i)(6), (i)(8), and (i)(10) of this section and paragraphs (i)(1)(i), (i)(1)(ii), and (i)(1)(iii) of this section. Repairs must bring the annual leak rate to below 35 percent.

(i) If the owners or operators of the federally-owned commercial refrigerant appliances determine that the leaks cannot be repaired in accordance with paragraph (i)(9) of this section and that an extension in accordance with the requirements discussed in this paragraph (i)(1)(i) of this section apply, they must document all repair efforts, and notify EPA of their inability to comply within the 30-day repair requirement, and the reason for the inability must be submitted to EPA in accordance with § 82.166(n). Such notification must be made within 30 days of discovering the leaks. EPA will determine if the extension requested in accordance with the requirements discussed in paragraph (i)(1)(i) of this section is justified. If the extension is not justified, EPA will notify the owner/operator within 30 days of receipt of the notification.

(ii) Owners or operators of federally-owned commercial refrigeration equipment may have more than 30 days to repair leaks if the refrigeration appliance is located in an area subject to radiological contamination or where the shutting down of the appliance will directly lead to radiological contamination. Only the additional time needed to conduct and complete repairs in a safe working environment will be permitted.

(iii) Owners or operators of federally-owned commercial refrigeration equipment requesting or who are granted time extensions under this paragraph must comply with paragraphs (i)(3) and (i)(4) of this section.

(2) The owners or operators of industrial process refrigeration equipment normally containing more than 50 pounds of refrigerant must have leaks repaired if the appliance is leaking at a rate such that the loss of refrigerant will exceed 35 percent of the total charge during a 12-month period in accordance with paragraph (i)(9) of this section, except as described in paragraphs (i)(6), (i)(7) and (i)(10) of this section, and paragraphs (i)(2)(i) and (i)(2)(ii) of this section. Repairs must bring annual leak rates to below 35 percent during a 12-month period. If the owners or operators of the industrial process refrigeration equipment determine that the leak rate cannot be brought to below 35 percent during a 12-month period within 30 days (or 120 days, where an industrial process shutdown in accordance with paragraph (i)(2)(ii) of this section is required,) and in accordance with paragraph (i)(9) of this section, and that an extension in accordance with the requirements discussed in this paragraph apply, the owners or operators of the appliance must document all repair efforts, and notify EPA of the reason for the inability in accordance with § 82.166(n) within 30 days of making this determination. Owners or operators who obtain an extension pursuant to this section or elect to utilize the additional time provided in paragraph (i)(2)(i) of this section, must conduct all necessary leak repairs, if any, that do not require any additional time beyond the initial 30 or 120 days.

(i) The owners or operators of industrial process refrigeration equipment are permitted more than 30 days (or 120 days where an industrial process shutdown in accordance with paragraph (i)(2)(ii) of this section is required) to repair leaks, if the necessary parts are unavailable or if requirements of other applicable federal, state, or local regulations make a repair within 30 or 120 days impossible. Only the additional time needed to receive delivery of the necessary parts or to comply with the pertinent regulations will be permitted.

(ii) Owners or operators of industrial process refrigeration equipment will have a 120-day repair period, rather than a 30-day repair period, to repair leaks in instances where an industrial process shutdown is needed to repair a leak or leaks from industrial process refrigeration equipment.

(3) Owners or operators of industrial process refrigeration equipment and owners or operators of federally-owned commercial refrigeration equipment or of federally-owned comfort cooling appliances who are granted additional time under paragraphs (i)(1) or (i)(5) of this section, must have repairs performed in a manner that sound professional judgment indicates will bring the leak rate below the applicable allowable leak rate. When an industrial process shutdown has occurred or when repairs have been made while an appliance is mothballed, the owners or operators shall conduct an initial verification test at the conclusion of the repairs and a follow-up verification test. The follow-up verification test shall be conducted within 30 days of completing the repairs or within 30 days of bringing the appliance back online, if taken off-line, but no sooner than when the appliance has achieved normal operating characteristics and conditions. When repairs have been conducted without an industrial process shutdown or system mothballing, an initial verification test shall be conducted at the conclusion of the repairs, and a follow-up verification test shall be conducted within 30 days of the initial verification test. In all cases, the follow-up verification test shall be conducted at normal operating characteristics and conditions, unless sound professional judgment indicates that tests performed at normal operating characteristics and conditions will produce less reliable results, in which case the follow-up verification test shall be conducted at or near the normal operating pressure where practicable, and at or near the normal operating temperature where practicable.

(i) If the owners or operators of industrial process refrigeration equipment takes the appliance off-line, or if the owners or operators of federally-

owned commercial refrigeration or of federally-owned comfort cooling appliances who are granted additional time under paragraphs (i)(1) or (i)(5) of this section take the appliance off-line, they cannot bring the appliance back on-line until an initial verification test indicates that the repairs undertaken in accordance with paragraphs (i)(1)(i), (ii), (iii), or (i)(2)(i) and (ii), or (5)(i), (ii), and (iii) of this section have been successfully completed, demonstrating the leak or leaks are repaired. The owners or operators of the industrial process refrigeration equipment, federally-owned commercial refrigeration appliances, or federally-owned comfort cooling appliances are exempted from this requirement only where the owners or operators will retrofit or retire the industrial process refrigeration equipment, federally-owned commercial refrigeration appliance, or federally-owned comfort cooling appliance in accordance with paragraph (i)(6) of this section. Under this exemption, the owner or operators may bring the industrial process refrigeration equipment, federally-owned commercial refrigeration appliance, or federally-owned comfort cooling appliance back on-line without successful completion of an initial verification test.

(ii) If the follow-up verification test indicates that the repairs to industrial process refrigeration equipment, federally-owned commercial refrigeration equipment, or federally-owned comfort cooling appliances have not been successful, the owner or operator must retrofit or retire the equipment in accordance with paragraph (i)(6) and any such longer time period as may apply under paragraphs (i)(7)(i), (ii) and (iii) or (i)(8)(i) and (ii) of this section. The owners and operators of the industrial process refrigeration equipment, federally-owned commercial refrigeration equipment, or federally-owned comfort cooling appliances are relieved of this requirement if the conditions of paragraphs (i)(3)(iv) and/or (i)(3)(v) of this section are met.

(iii) The owner or operator of industrial process refrigeration equipment that fails a follow-up verification test must notify EPA within 30 days of the failed follow-up verification test in accordance with § 82.166(n).

(iv) The owner or operator is relieved of the obligation to retrofit or replace the industrial process refrigeration equipment as discussed in paragraph (i)(6) of this section if second repair efforts to fix the same leaks that were the subject of the first repair efforts are successfully completed within 30 days or 120 days where an industrial process shutdown is required, after the initial failed follow-up verification test. The second repair efforts are subject to the same verification requirements of paragraphs (i)(3), (i)(3) (i) and (ii) of this section. The owner or operator is required to notify EPA within 30 days of the successful follow-up verification test in accordance with § 82.166(n) and the owner or operator is no longer subject to the obligation to retrofit or replace the appliance that arose as a consequence of the initial failure to verify that the leak repair efforts were successful.

(v) The owner or operator of industrial process refrigeration equipment is relieved of the obligation to retrofit or replace the equipment in accordance with paragraph (i)(6) of this section if within 180 days of the initial failed follow-up verification test, the owner or operator establishes that the appliance's annual leak rate does not exceed the applicable allowable annual leak rate, in accordance with paragraph (i)(4) of this section. If the appliance's owner or operator establishes that the appliance's annual leak rate does not exceed the applicable allowable annual leak rate, the owner or operator is required to notify EPA within 30 days of that determination in accordance with § 82.166(n) and the owner or operator would no longer be subject to the obligation to retrofit or replace the equipment that arose as a consequence of the initial failure to verify that the leak repair efforts were successful.

(4) In the case of a failed follow-up verification test subject to paragraph (i)(3)(v) of this section, the determination of whether industrial process refrigeration equipment has an annual leak rate that exceeds the applicable allowable annual leak rate will be made in accordance with parameters identified by the owner or operator in its notice to EPA regarding the failure of the initial follow-up verification

test, if those parameters are acceptable to EPA; otherwise by parameters selected by EPA. The determination must be based on the full charge for the affected industrial process refrigeration equipment. The leak rate determination parameters in the owner's or operator's notice will be considered acceptable unless EPA notifies the owners or operators within 30 days of receipt of the notice. Where EPA does not accept the parameters identified by the owner or operator in its notice, EPA will not provide additional time beyond the additional time permitted in paragraph (i)(3)(v) of this section unless specifically stated in the parameters selected by EPA.

(5) Owners or operators of comfort cooling appliances normally containing more than 50 pounds of refrigerant and not covered by paragraph (i)(1) or (i)(2) of this section must have leaks repaired in accordance with paragraph (i)(9) of this section if the appliance is leaking at a rate such that the loss of refrigerant will exceed 15 percent of the total charge during a 12-month period, except as described in paragraphs (i)(6), (i)(8) and (i)(10) of this section and paragraphs (i)(5)(i), (i)(5)(ii) and (i)(5)(iii) of this section. Repairs must bring the annual leak rate to below 15 percent.

(i) If the owners or operators of federally-owned comfort-cooling appliances determine that the leaks cannot be repaired in accordance with paragraph (i)(9) of this section and that an extension in accordance with the requirements discussed in paragraph (i)(5) of this section apply, they must document all repair efforts, and notify EPA of their inability to comply within the 30-day repair requirement, and the reason for the inability must be submitted to EPA in accordance with § 82.166(n). Such notification must be made within 30 days of discovering that leak repair efforts cannot be completed within 30 days.

(ii) Owners or operators of federally-owned comfort-cooling appliances may have more than 30 days to repair leaks where the refrigeration appliance is located in an area subject to radiological contamination or where the shutting down of the appliance will directly lead to radiological contamination. Only the additional time needed to conduct and complete work in a safe environment will be permitted.

(iii) Owners or operators of federally-owned comfort-cooling appliances requesting, or who are granted, time extensions under this paragraph must comply with paragraphs (i)(3) and (i)(4) of this section.

(6) Owners or operators are not required to repair leaks as provided in paragraphs (i)(1), (i)(2), and (i)(5) of this section if, within 30 days of discovering a leak greater than the applicable allowable leak rate, or within 30 days of a failed follow-up verification test, or after making good faith efforts to repair the leaks as described in paragraph (i)(6)(i) of this section, they develop a one-year retrofit or retirement plan for the leaking appliance. Owners or operators who decide to retrofit the appliance must use a refrigerant or substitute with a lower or equivalent ozone-depleting potential than the previous refrigerant and must include such a change in the retrofit plan. Owners or operators who retire and replace the appliance must replace the appliance with an appliance that uses a refrigerant or substitute with a lower or equivalent ozone-depleting potential and must include such a change in the retirement plan. The retrofit or retirement plan (or a legible copy) must be kept at the site of the appliance. The original plan must be made available for EPA inspection upon request. The plan must be dated, and all work performed in accordance with the plan must be completed within one year of the plan's date, except as described in paragraphs (i)(6)(i), (i)(7), and (i)(8) of this section. Owners or operators are temporarily relieved of this obligation if the appliance has undergone system mothballing as defined in § 82.152.

(i) If the owner or operator has made good faith efforts to repair leaks from the appliance in accordance with paragraphs (i)(1), (i)(2), or (i)(5) of this section and has decided prior to completing a follow-up verification test, to retrofit or retire the appliance in accordance with paragraph (i)(6) of this section, the owner or operator must develop a retrofit or retirement plan within 30 days of the decision to retrofit or retire the appliance. The owner

or operator must complete the retrofit or retirement of the appliance within one year and 30 days of when the owner or operator discovered that the leak rate exceeded the applicable allowable leak rate, except as provided in paragraphs (i)(7) and (i)(8) of this section.

(ii) In all cases, subject to paragraph (i)(6)(i) of this section, the written plan shall be prepared no later than 30 days after the owner or operator has determined to proceed with retrofitting or retiring the appliance. All reports required under § 82.166(o) shall be due at the time specified in the paragraph imposing the specific reporting requirement, or no later than 30 days after the decision to retrofit or retire the appliance, whichever is later.

(iii) In cases where the owner or operator of industrial process refrigeration equipment has made good faith efforts to retrofit or retire industrial process refrigeration equipment prior to August 8, 1995, and where these efforts are not complete, the owner or operator must develop a retrofit or retirement plan that will complete the retrofit or retirement of the affected appliance by August 8, 1996. This plan (or a legible copy) must be kept at the site of the appliance. The original must be made available for EPA inspection upon request. Where the conditions of paragraphs (i)(7) and (i)(8) of this section apply, and where the length of time necessary to complete the work is beyond August 8, 1996, all records must be submitted to EPA in accordance with § 82.166(o), as well as maintained on-site.

(7) The owners or operators of industrial process refrigeration equipment will be allowed additional time to complete the retrofit or retirement of industrial process refrigeration equipment if the conditions described in paragraphs (i)(7)(i) or (i)(7)(ii) of this section are met. The owners or operators of industrial process refrigeration equipment will be allowed additional time beyond the additional time provided in paragraph (i)(7)(ii) of this section if the conditions described in paragraph (i)(7)(iii) of this section are met.

(i) Additional time, to the extent reasonably necessary will be allowed for retrofitting or retiring industrial process refrigeration equipment due to delays occasioned by the requirements of other applicable federal, state, or local laws or regulations, or due to the unavailability of a suitable replacement refrigerant with a lower ozone depletion potential. If these circumstances apply, the owner or operator of the facility must notify EPA within six months after the 30-day period following the discovery of an exceedance of the 35 percent leak rate. Records necessary to allow EPA to determine that these provisions apply and the length of time necessary to complete the work must be submitted to EPA in accordance with § 82.166(o), as well as maintained on-site. EPA will notify the owner or operator of its determination within 60 days of receipt the submittal.

(ii) An additional one-year period beyond the initial one-year retrofit period is allowed for industrial process refrigeration equipment where the following criteria are met:

(A) The new or the retrofitted industrial process refrigerant equipment is custom-built;

(B) The supplier of the appliance or one or more of its critical components has quoted a delivery time of more than 30 weeks from when the order is placed;

(C) The owner or operator notifies EPA within six months of the expiration of the 30-day period following the discovery of an exceedance of the 35 percent leak rate to identify the owner or operator, describe the appliance involved, explain why more than one year is needed, and demonstrate that the first two criteria are met in accordance with § 82.166(o); and

(D) The owner or operator maintains records that are adequate to allow a determination that the criteria are met.

(iii) The owners or operators of industrial process refrigeration equipment may request additional time to complete retrofitting or retiring industrial process refrigeration equipment beyond the additional one-year period if needed and where the initial additional one year was granted in accordance with paragraph (i)(7)(ii) of this section. The request shall be submitted to EPA before the end of the ninth month of the first additional year and

shall include revisions of information required under § 82.166(o). Unless EPA objects to this request submitted in accordance with § 82.166(o) within 30 days of receipt, it shall be deemed approved.

(8) Owners or operators of federally-owned commercial or comfort-cooling appliances will be allowed an additional year to complete the retrofit or retirement of the appliances if the conditions described in paragraph (i)(8)(i) of this section are met, and will be allowed one year beyond the additional year if the conditions in paragraph (i)(8)(ii) of this section are met.

(i) Up to one additional one-year period beyond the initial one-year retrofit period is allowed for such equipment where the following criteria are met:

(A) Due to complications presented by the federal agency appropriations and/or procurement process, a delivery time of more than 30 weeks from the beginning of the official procurement process is quoted, or where the appliance is located in an area subject to radiological contamination and creating a safe working environment will require more than 30 weeks;

(B) The operator notifies EPA within six months of the expiration of the 30-day period following the discovery of an exceedance of the applicable allowable annual leak rate to identify the operator, describe the appliance involved, explain why more than one year is needed, and demonstrate that the first criterion is met in accordance with § 82.166(o); and

(C) The operator maintains records adequate to allow a determination that the criteria are met.

(ii) The owners or operators of federally-owned commercial or comfort-cooling appliances may request additional time to complete retrofitting, replacement or retiring such appliances beyond the additional one-year period if needed and where the initial additional one year was granted in accordance with paragraph (i)(8)(i) of this section. The request shall be submitted to EPA before the end of the ninth month of the first additional year and shall include revisions of information earlier submitted as required under § 82.166(o). Unless EPA objects to this request submitted in accordance with § 82.166(o) within 30 days of receipt, it shall be deemed approved.

(9) Owners or operators must repair leaks pursuant to paragraphs (i)(1), (i)(2) and (i)(5) of this section within 30 days after discovery, or within 30 days after when the leaks should have been discovered if the owners intentionally shielded themselves from information which would have revealed a leak, unless granted additional time pursuant to § 82.156(i).

(10) The amount of time for owners and operators to complete repairs, retrofit plans or retrofits/replacements/retirements under paragraphs (i)(1), (i)(2), (i)(5), (i)(6), (i)(7), (i)(8), and (i)(9) of this section is temporarily suspended at the time an appliance is mothballed as defined in § 82.152. The time for owners and operators to complete repairs, retrofit plans, or retrofits/replacements will resume on the day the appliance is brought back online and is no longer considered mothballed. All initial and follow-up verification tests must be performed in accordance with paragraphs (i)(3), (i)(3)(i), and (i)(3)(ii) of this section.

(11) In calculating annual leak rates, purged refrigerant that is destroyed at a verifiable destruction efficiency of 98 percent or greater will not be counted toward the leak rate. Owners or operators destroying purged refrigerants must maintain information as set forth in § 82.166(p)(1) and submit to EPA, within 60 days after the first time such exclusion is used by that facility, information set forth in § 82.166(p)(2).

[58 FR 28712, May 14, 1993, as amended at 59 FR 42956, 42962, Aug. 19, 1994; 59 FR 55926, Nov. 9, 1994; 60 FR 40440, Aug. 8, 1995; 68 FR 43807, July 24, 2003; 69 FR 11979, Mar. 12, 2004; 70 FR 1991, Jan. 11, 2005]

### § 82.158 Standards for recycling and recovery equipment.

(a) Effective September 22, 2003, all manufacturers and importers of recycling and recovery equipment intended for use during the maintenance, service, or repair of appliances except MVACs and MVAC-like appliances or during the disposal of appliances except small appliances, MVACs, and MVAC-like appliances, shall have had such equipment certified by an approved equipment testing organization

to meet the applicable requirements in paragraph (b)(1), (b)(2), or (d) of this section. All manufacturers and importers of recycling and recovery equipment intended for use during the maintenance, service, or repair of MVAC-like appliances shall have had such equipment certified pursuant to § 82.36(a).

(b) Equipment manufactured or imported on or after November 15, 1993 and before September 22, 2003, for use during the maintenance, service, or repair of appliances except small appliances, MVACs, and MVAC-like appliances or during the disposal of appliances except small appliances, MVACs, and MVAC-like appliances must be certified by an approved equipment testing organization to meet the requirements of paragraph (b)(1) of this section and the following requirements below. Equipment manufactured or imported on or after September 22, 2003, for use during the maintenance, service, or repair of appliances except small appliances, MVACs, and MVAC-like appliances or during the disposal of appliances except small appliances, MVACs, and MVAC-like appliances must be certified by an approved equipment testing organization to meet the requirements of paragraph (b)(2) of this section and the following requirements.

(1) In order to be certified, the equipment must be capable of achieving the level of evacuation specified in Table 2 of this section under the conditions of appendix B1 of this subpart (based upon the ARI Standard 740–1993, Performance of Refrigerant Recovery, Recycling and/or Reclaim Equipment):

TABLE 2—LEVELS OF EVACUATION WHICH MUST BE ACHIEVED BY RECOVERY OR RECYCLING EQUIPMENT INTENDED FOR USE WITH APPLIANCES [1]

[Manufactured on or after November 15, 1993]

| Type of appliance with which recovery or recycling machine is intended to be used | Inches of Hg vacuum |
|---|---|
| HCFC-22 appliances, or isolated component of such appliances, normally containing less than 200 pounds of refrigerant | 0 |
| HCFC-22 appliances, or isolated component of such appliances, normally containing 200 pounds or more of refrigerant | 10 |
| Very high-pressure appliances | 0 |
| Other high-pressure appliances, or isolated component of such appliances, normally containing less than 200 pounds of refrigerant | 10 |
| Other high-pressure appliances, or isolated component of such appliances, normally containing 200 pounds or more of refrigerant | 15 |
| Low-pressure appliances | [2] 25 |

[1] Except for small appliances, MVACs, and MVAC-like appliances.
[2] mm Hg absolute.

The vacuums specified in inches of Hg vacuum must be achieved relative to an atmospheric pressure of 29.9 inches of Hg absolute.

(2) In order to be certified, the equipment must be capable of achieving the level of evacuation specified in Table 2 of paragraph (b)(1) of this section under the conditions of appendix B2 of this subpart (based upon the ARI Standard 740–1995, Performance of Refrigerant Recovery, Recycling and/or Reclaim Equipment).

(3) Recovery or recycling equipment whose recovery efficiency cannot be tested according to the procedures in appendix B1 or B2 of this subpart as applicable may be certified if an approved third-party testing organization adopts and performs a test that demonstrates, to the satisfaction of the Administrator, that the recovery efficiency of that equipment is equal to or better than that of equipment that:

(i) Is intended for use with the same type of appliance; and

(ii) Achieves the level of evacuation in Table 2. The manufacturer's instructions must specify how to achieve the required recovery efficiency, and the equipment must be tested when used according to these instructions.

(4) The equipment must meet the minimum requirements for certification under appendix B1 or B2 of this subpart as applicable.

(5) If the equipment is equipped with a noncondensables purge device, the equipment must not release more than three (3) percent of the quantity of refrigerant being recycled through noncondensables purging under the

conditions of appendix B1 and B2 of this subpart as applicable.

(6) The equipment must be equipped with low-loss fittings on all hoses.

(7) The equipment must have its liquid recovery rate and its vapor recovery rate measured under the conditions of appendix B1 or B2 as applicable, unless the equipment has no inherent liquid or vapor recovery rate.

(c) Equipment manufactured or imported before November 15, 1993 for use during the maintenance, service, or repair of appliances except small appliances, MVACs, and MVAC-like appliances or during the disposal of appliances except small appliances, MVACs, and MVAC-like appliances will be considered certified if it is capable of achieving the level of evacuation specified in Table 3 of this section when tested using a properly calibrated pressure gauge:

TABLE 3—LEVELS OF EVACUATION WHICH MUST BE ACHIEVED BY RECOVERY OR RECYCLING MACHINES INTENDED FOR USE WITH APPLIANCES [1]

[Manufactured before November 15, 1993]

| Type of air-conditioning or refrigeration equipment with which recovery or recycling machine is intended to be used | Inches of vacuum (relative to standard atmospheric pressure of 29.9 inches Hg) |
|---|---|
| HCFC-22 equipment, or isolated component of such equipment, normally containing less than 200 pounds of refrigerant | 0 |
| HCFC-22 equipment, or isolated component of such equipment, normally containing 200 pounds or more of refrigerant | 4 |
| Very high-pressure equipment | 0 |
| Other high-pressure equipment, or isolated component of such equipment, normally containing less than 200 pounds of refrigerant | 4 |
| Other high-pressure equipment, or isolated component of such equipment, normally containing 200 pounds or more of refrigerant | 4 |
| Low-pressure equipment | 25 |

[1] Except for small appliances, MVACs, and MVAC-like appliances.

(d) Equipment manufactured or imported on or after November 15, 1993 and before September 22, 2003, for use during the maintenance, service, or repair of small appliances must be certified by an approved equipment testing organization to be capable of achieving the requirements described in either paragraph (d)(1) or (d)(2) of this section. Equipment manufactured or imported on or after September 22, 2003, for use during the maintenance, service, or repair of small appliances must be certified by an approved equipment testing organization to be capable of either paragraph (d)(1) or (d)(3) of this section:

(1) Recovering 90% of the refrigerant in the test stand when the compressor of the test stand is operating and 80% of the refrigerant when the compressor of the test stand is not operating when used in accordance with the manufacturer's instructions under the conditions of appendix C, Method for Testing Recovery Devices for Use with Small Appliances; or

(2) Achieving a four-inch vacuum under the conditions of appendix B1 of this subpart, based upon ARI Standard 740–1993; or

(3) Achieving a four-inch vacuum under the conditions of appendix B2 of this subpart, based upon ARI Standard 740–1995.

(e) Equipment manufactured or imported before November 15, 1993 for use with small appliances will be considered certified if it is capable of either:

(1) Recovering 80% of the refrigerant in the system, whether or not the compressor of the test stand is operating, when used in accordance with the manufacturer's instructions under the conditions of appendix C, Method for Testing Recovery Devices for Use with Small Appliances; or

(2) Achieving a four-inch vacuum when tested using a properly calibrated pressure gauge.

(f) Equipment manufactured or imported on or after November 15, 1993 for use during the maintenance, service, or repair of MVAC-like appliances must be certified in accordance with § 82.36(a).

(g) Equipment manufactured or imported before November 15, 1993 for use during the maintenance, service, or repair of MVAC-like appliances must be capable of reducing the system pressure to 102 mm of mercury vacuum under the conditions of the SAE Standard, SAE J1990 (appendix A to 40 CFR part 82, subpart B).

(h) Manufacturers and importers of equipment certified under paragraphs (b) and (d) of this section must place a

label on each piece of equipment stating the following:

THIS EQUIPMENT HAS BEEN CERTIFIED BY [APPROVED EQUIPMENT TESTING ORGANIZATION] TO MEET EPA's MINIMUM REQUIREMENTS FOR RECYCLING OR RECOVERY EQUIPMENT INTENDED FOR USE WITH [APPROPRIATE CATEGORY OF APPLIANCE].

The label shall also show the date of manufacture and the serial number (if applicable) of the equipment. The label shall be affixed in a readily visible or accessible location, be made of a material expected to last the lifetime of the equipment, present required information in a manner so that it is likely to remain legible for the lifetime of the equipment, and be affixed in such a manner that it cannot be removed from the equipment without damage to the label.

(i) The Administrator will maintain a list of equipment certified pursuant to paragraphs (b), (d), and (f) of this section by manufacturer and model. Persons interested in obtaining a copy of the list should send written inquiries to the address in § 82.160(a).

(j) Manufacturers or importers of recycling or recovery equipment intended for use during the maintenance, service, or repair of appliances except MVACs or MVAC-like appliances or during the disposal of appliances except small appliances, MVACs, and MVAC-like appliances must periodically have approved equipment testing organizations conduct either:

(1) Retests of certified recycling or recovery equipment in accordance with paragraph (a) of this section or

(2) Inspections of recycling or recovery equipment at manufacturing facilities to ensure that each equipment model line that has been certified under this section continues to meet the certification criteria. Such retests or inspections must be conducted at least once every three years after the equipment is first certified.

(k) An equipment model line that has been certified under this section may have its certification revoked if it is subsequently determined to fail to meet the certification criteria. In such cases, the Administrator or her or his designated representative shall give notice to the manufacturer or importer setting forth the basis for her or his determination.

(l) Equipment used to evacuate refrigerant from MVACs and MVAC-like appliances before they are disposed of must be certified in accordance with § 82.36(a).

(m) Equipment used to evacuate refrigerant from small appliances before they are disposed of must be capable of either:

(1) Removing 90% of the refrigerant when the compressor of the small appliance is operating and 80% of the refrigerant when the compressor of the small appliance is not operating, when used in accordance with the manufacturer's instructions under the conditions of appendix C, Method for Testing Recovery Devices for Use With Small Appliances; or

(2) Evacuating the small appliance to four inches of vacuum when tested using a properly calibrated pressure gauge.

(n) Effective October 22, 2003, equipment that is advertised or marketed as ''recycling equipment'' must be capable of recycling the standard contaminated refrigerant sample of appendix B2 of this subpart (based upon ARI Standard 740–1995), section 5, to the levels in the following table when tested under the conditions of appendix B2 of this subpart:

MAXIMUM LEVELS OF CONTAMINANTS PERMISSIBLE IN REFRIGERANT PROCESSED THROUGH EQUIPMENT ADVERTISED AS "RECYCLING" EQUIPMENT

| Contaminants | Low-pressure (R–11, R–123, R–113) systems | R–12 systems | All other systems |
|---|---|---|---|
| Acid Content (by wt.) | 1.0 PPM | 1.0 PPM | 1.0 PPM. |
| Moisture (by wt.) | 20 PPM | 10 PPM | 20 PPM. |
| Noncondensable Gas (by vol.) | N/A | 2.0% | 2.0%. |
| High Boiling Residues (by vol.) | 1.0% | 0.02% | 0.02%. |
| Chlorides by Silver Nitrate Test | No turbidity | No turbidity | No turbidity. |
| Particulates | Visually clean | Visually clean | Visually clean. |

[58 FR 28712, May 14, 1993, as amended at 59 FR 42957, Aug. 19, 1994; 68 FR 43807, July 24, 2003; 73 FR 34649, June 18, 2008]

### § 82.160 Approved equipment testing organizations.

(a) Any equipment testing organization may apply for approval by the Administrator to certify equipment pursuant to the standards in § 82.158 and appendices B2 or C of this subpart. The application shall be mailed to: Section 608 Recycling Program Manager; Global Programs Division; Mail Code: 6205J; U.S. Environmental Protection Agency; 1200 Pennsylvania Avenue, NW.; Washington, DC 20460.

(b) Applications for approval must include written information verifying the following:

(1) The list of equipment present at the organization that will be used for equipment testing.

(2) Expertise in equipment testing and the technical experience of the organization's personnel.

(3) Thorough knowledge of the standards and recordkeeping and reporting requirements as they appear in §§ 82.158 and 82.166 and Appendices B2 and/or C (as applicable) of this subpart.

(4) The organization must describe its program for verifying the performance of certified recycling and recovery equipment manufactured over the long term, specifying whether retests of equipment or inspections of equipment at manufacturing facilities will be used.

(5) The organization must have no conflict of interest and receive no direct or indirect financial benefit from the outcome of certification testing.

(6) The organization must agree to allow the Administrator access to records and personnel to verify the information contained in the application.

(c) Organizations may not certify equipment prior to receiving approval from EPA. If approval is denied under this section, the Administrator or her or his designated representative shall give written notice to the organization setting forth the basis for her or his determination.

(d) If at any time an approved testing organization is found to be conducting certification tests for the purposes of this subpart in a manner not consistent with the representations made in its application for approval under this section, the Administrator reserves the right to revoke approval in accordance with § 82.169. In such cases, the Administrator or her or his designated representative shall give notice to the organization setting forth the basis for her or his determination.

[58 FR 28712, May 14, 1993, as amended at 59 FR 42962, Aug. 19, 1994; 68 FR 43808, July 24, 2003]

### § 82.161 Technician certification.

(a) Effective November 14, 1994, technicians, except technicians who successfully completed voluntary certification programs that apply for approval under § 82.161(g) by December 9, 1994, must be certified by an approved technician certification program under the requirements of this paragraph (a). Effective May 15, 1995, all technicians must be certified by an approved technician certification program under the requirements of this paragraph (a).

(1) Technicians, as defined in § 82.152, who maintain, service, or repair small appliances must be properly certified as Type I technicians.

(2) Technicians who maintain, service, or repair medium-, high-, or very high-pressure appliances, except small appliances, MVACs, and MVAC-like appliances, or dispose of medium-, high-, or very high-pressure appliances, except small appliances, MVACs, and MVAC-like appliances, must be properly certified as Type II technicians.

(3) Technicians who maintain, service, or repair low-pressure appliances or dispose of low-pressure appliances must be properly certified as Type III technicians.

(4) Technicians who maintain, service, or repair low- and high-pressure equipment as described in § 82.161(a) (1), (2) and (3) must be properly certified as Universal technicians.

(5) Technicians who maintain, service, or repair MVAC-like appliances must either be properly certified as Type II technicians or complete the training and certification test offered

by a training and certification program approved under § 82.40.

(6) Apprentices are exempt from this requirement provided the apprentice is closely and continually supervised by a certified technician while performing any maintenance, service, repair, or disposal that could reasonably be expected to release refrigerant from appliances into the environment. The supervising certified technician is responsible for ensuring that the apprentice complies with this subpart.

(b) *Test Subject Material.* The Administrator shall maintain a bank of test questions divided into four groups, including a core group and three technical groups. The Administrator shall release this bank of questions only to approved technician certification programs. Tests for each type of certification shall include a minimum of 25 questions drawn from the core group and a minimum of 25 questions drawn from each relevant technical group. These questions shall address the subject areas listed in appendix D.

(c) *Program Approval.* Persons may seek approval of any technician certification program (program), in accordance with the provisions of this paragraph, by submitting to the Administrator at the address in § 82.160(a) verification that the program meets all of the standards listed in appendix D and the following standards:

(1) *Alternative Examinations.* Programs are encouraged to make provisions for non-English speaking technicians by providing tests in other languages or allowing the use of a translator when taking the test. If a translator is used, the certificate received must indicate that translator assistance was required. A test may be administered orally to any person who makes this request, in writing, to the program at least 30 days before the scheduled date for the examination. The letter must explain why the request is being made.

(2) *Recertification.* The Administrator reserves the right to specify the need for technician recertification at some future date, if necessary, by placing a notice in the FEDERAL REGISTER.

(3) *Proof of Certification.* Programs must issue individuals a wallet-sized card to be used as proof of certification, upon successful completion of the test. Programs must issue an identification card to technicians that receive a score of 70 percent or higher on the closed-book certification exam, within 30 days. Programs providing Type I certification using the mail-in format, must issue a permanent identification card to technicians that receive a score of 84 percent or higher on the certification exam, no later than 30 days after the program has received the exam and any additional required material. Each card must include, at minimum, the name of the certifying program, and the date the organization became a certifying program, the name of the person certified, the type of certification, a unique number for the certified person, and the following text:

[Name of person] has been certified as a [Type I, Type II, Type III, and/or Universal, as appropriate] technician as required by 40 CFR part 82, subpart F.

(4) The Administrator reserves the right to consider other factors deemed relevant to ensure the effectiveness of certification programs.

(d) If approval is denied under this section, the Administrator shall give written notice to the program setting forth the basis for her or his determination.

(e) If at any time an approved program violates any of the above requirements, the Administrator reserves the right to revoke approval in accordance with § 82.169. In such cases, the Administrator or her or his designated representative shall give notice to the organization setting forth the basis for her or his determination.

(f) Authorized representatives of the Administrator may require technicians to demonstrate on the business entity's premises their ability to perform proper procedures for recovering and/or recycling refrigerant. Failure to demonstrate or failure to properly use the equipment may result in revocation of the certificate. Failure to abide by any of the provisions of this subpart may also result in revocation or suspension of the certificate. If a technician's certificate is revoked, the technician would need to recertify before maintaining, servicing, repairing or disposing of any appliances.

(g)(1) Any person seeking approval of a technician certification program may also seek approval to certify technicians who successfully completed a voluntary certification program operated previously by that person. Interested persons must submit to the Administrator at the address in § 82.160(a) verification that the voluntary certification program substantially complied with most of the standards of § 82.161(c) and appendix D of subpart F of this part. If the program did not test or train participants on some elements of the test subject material, the person must submit supplementary information on the omitted material to the Administrator for approval and verify that the approved information will be provided to technicians pursuant to section j of appendix D of subpart F of this part. In this case, the person may not issue a certification card to a technician until he or she has received a signed statement from the technician indicating that the technician has read the supplementary information. Approval may be granted for Type I, Type II, or Type III certification, or some combination of these, depending upon the coverage in the voluntary certification program of the information in each Type. In order to have their voluntary programs considered for approval, persons must submit applications both for approval as a technician certification program and for approval as a voluntary program by December 9, 1994.

(2)(i) Persons who are approved to certify technicians who successfully completed their voluntary programs pursuant to § 82.161(g)(1) must:

(A) Notify technicians who successfully completed their voluntary programs of the Administrator's decision within 60 days of that decision;

(B) Send any supplementary materials required pursuant to § 82.161(g)(1) to technicians who successfully completed their voluntary programs within 60 days of the Administrator's decision; and

(C) Send certification cards to technicians who successfully completed their voluntary programs within 60 days of receipt of signed statements from the technicians indicating that the technicians have read the supplementary information.

(ii) Persons who are disapproved to certify technicians who successfully completed their voluntary programs pursuant to § 82.161(g)(1) must notify technicians who successfully completed their voluntary programs of the Administrator's decision within 30 days of that decision.

(iii) Persons who withdraw applications for voluntary program approval submitted pursuant to § 82.161(g)(1) must inform technicians who successfully completed their voluntary programs of the withdrawal by the later of 30 days after the withdrawal or December 9, 1994.

(3) Technicians who successfully completed voluntary certification programs may receive certification in a given Type through that program only if:

(i) The voluntary certification program successfully completed by the technician is approved for that Type pursuant to § 82.161(g)(1);

(ii) The technician successfully completed the portions of the voluntary certification program that correspond to that Type; and

(iii) The technician reads any supplementary materials required by the Administrator pursuant to § 82.161(g)(1) and section j of appendix D of subpart F of this part, and returns the signed statement required by § 82.161(g)(1).

[58 FR 28712, May 14, 1993, as amended at 59 FR 42957, 42962, Aug. 19, 1994; 68 FR 43808, July 24, 2003; 69 FR 11980, Mar. 12, 2004]

### § 82.162 Certification by owners of recovery and recycling equipment.

(a) No later than August 12, 1993, or within 20 days of commencing business for those persons not in business at the time of promulgation, persons maintaining, servicing, or repairing appliances except for MVACs, and persons disposing of appliances except for small appliances and MVACs, must certify to the Administrator that such person has acquired certified recovery or recycling equipment and is complying with the applicable requirements of this subpart. Such equipment may include system-dependent equipment but must include self-contained equipment, if the

equipment is to be used in the maintenance, service, or repair of appliances except for small appliances. The owner or lessee of the recovery or recycling equipment may perform this certification for his or her employees. Certification shall take the form of a statement signed by the owner of the equipment or another responsible officer and setting forth:

(1) The name and address of the purchaser of the equipment, including the county name;

(2) The name and address of the establishment where each piece of equipment is or will be located;

(3) The number of service trucks (or other vehicles) used to transport technicians and equipment between the establishment and job sites and the field;

(4) The manufacturer name, the date of manufacture, and if applicable, the model and serial number of the equipment; and

(5) The certification must also include a statement that the equipment will be properly used in servicing or disposing of appliances and that the information given is true and correct. Owners or lessees of recycling or recovery equipment having their places of business in:

Connecticut
Maine
Massachusetts
New Hampshire
Rhode Island
Vermont

must send their certifications to:

CAA section 608 Enforcement Contact; EPA Region I; Mail Code SEA; JFK Federal Building; One Congress Street, Suite 1100; Boston, MA 02114–2023.

Owners or lessees of recycling or recovery equipment having their places of business in:

New York
New Jersey
Puerto Rico
Virgin Islands

must send their certifications to:

CAA section 608 Enforcement Contact; EPA Region II (2DECA-AC); 290 Broadway, 21st Floor; New York, NY 10007–1866.

Owners or lessees of recycling or recovery equipment having their places of business in:

Delaware
District of Columbia
Maryland
Pennsylvania
Virginia
West Virginia

must send their certifications to:

CAA section 608 Enforcement Contact; EPA Region III—Wheeling Operations Office; Mail Code 3AP12; 303 Methodist Building; 11th and Chapline Streets; Wheeling, WV 26003.

Owners or lessees of recycling or recovery equipment having their places of business in:

Alabama
Florida
Georgia
Kentucky
Mississippi
North Carolina
South Carolina
Tennessee

must send their certifications to:

CAA section 608 Enforcement Contact; EPA Region IV(APT-AE); Atlanta Federal Center; 61 Forsyth Street, SW.; Atlanta, GA 30303.

Owners or lessees of recycling or recovery equipment having their places of business in:

Illinois
Indiana
Michigan
Minnesota
Ohio
Wisconsin

must send their certifications to:

CAA section 608 Enforcement Contact, EPA Region V (AE17J); 77 West Jackson Blvd.; Chicago, IL 60604–3507.

Owners or lessees of recycling or recovery equipment having their places of business in:

Arkansas
Louisiana
New Mexico
Oklahoma
Texas

must send their certifications to:

CAA section 608 Enforcement Contact; EPA Region VI (6EN-AA); 1445 Ross Avenue, Suite 1200; Dallas, Texas 75202.

Owners or lessees of recycling or recovery equipment having their places of business in:

Iowa
Kansas
Missouri
Nebraska

must send their certifications to:

CAA section 608 Enforcement Contact; EPA Region VII; Mail Code APCO/ARTD; 901 North 5th Street; Kansas City, KS; 66101.

Owners or lessees of recycling or recovery equipment having their places of business in:

Colorado
Montana
North Dakota
South Dakota
Utah
Wyoming

must send their certifications to:

CAA section 608 Enforcement Contact, EPA Region VIII, Mail Code 8ENF-T, 999 18th Street, Suite 500, Denver, CO 80202–2466.

Owners or lessees of recycling or recovery equipment having their places of business in:

American Samoa
Arizona
California
Guam
Hawaii
Nevada

must send their certifications to:

CAA section 608 Enforcement Contact; EPA Region IX; Mail Code AIR–5; 75 Hawthorne Street; San Francisco, CA 94105.

Owners or lessees of recycling or recovery equipment having their places of business in:

Alaska
Idaho
Oregon
Washington

must send their certifications to:

CAA section 608 Enforcement Contact; EPA Region X (OAQ–107); 1200 Sixth Avenue; Seattle, WA 98101.

(b) Certificates under paragraph (a) of this section are not transferable. In the event of a change of ownership of an entity that maintains, services, or repairs appliances except MVACs, or that disposes of appliances except small appliances, MVACs, and MVAC-like appliances, the new owner of the entity shall certify within 30 days of the change of ownership pursuant to paragraph (a) of this section.

(c) No later than August 12, 1993, persons recovering refrigerant from small appliances, MVACs, and MVAC-like appliances for purposes of disposal of these appliances must certify to the Administrator that such person has acquired recovery equipment that meets the standards set forth in § 82.158 (l) and/or (m), as applicable, and that such person is complying with the applicable requirements of this subpart. Such equipment may include system-dependent equipment but must include self-contained equipment, if the equipment is to be used in the disposal of appliances except for small appliances. The owner or lessee of the recovery or recycling equipment may perform this certification for his or her employees. Certification shall take the form of a statement signed by the owner of the equipment or another responsible officer and setting forth:

(1) The name and address of the purchaser of the equipment, including the county name;

(2) The name and address of the establishment where each piece of equipment is or will be located;

(3) The number of service trucks (or other vehicles) used to transport technicians and equipment between the establishment and job sites and the field;

(4) The manufacturer's name, the date of manufacture, and if applicable, the model and serial number of the equipment; and

(5) The certification must also include a statement that the equipment will be properly used in recovering refrigerant from appliances and that the information given is true and correct. The certification shall be sent to the appropriate address in paragraph (a).

(d) Failure to abide by any of the provisions of this subpart may result in revocation or suspension of certification under paragraph (a) or (c) of this section. In such cases, the Administrator or her or his designated representative shall give notice to the organization setting forth the basis for her or his determination.

[58 FR 28712, May 14, 1993, as amended at 59 FR 42962, Aug. 19, 1994; 69 FR 11980, Mar. 12, 2004]

### § 82.164 Reclaimer certification.

Effective May 11, 2004, all persons reclaiming used refrigerant for sale to a new owner, except for persons who properly certified under this section prior to May 11, 2004, must certify to the Administrator that such person will:

(a) Reprocess refrigerant to all of the specifications in Appendix A of this subpart (based on ARI Standard 700–1995, *Specification for Fluorocarbons and Other Refrigerants*) that are applicable to that refrigerant;

(b) Verify that the refrigerant meets these specifications using the analytical methodology prescribed in Appendix A, which includes the primary methodologies included in the appendix to the ARI Standard 700–1995;

(c) Release no more than 1.5 percent of the refrigerant during the reclamation process; and

(d) Dispose of wastes from the reclamation process in accordance with all applicable laws and regulations.

(e) The data elements for certification are as follows:

(1) The name and address of the reclaimer;

(2) A list of equipment used to reprocess and analyze the refrigerant; and

(3) The owner or a responsible officer of the reclaimer must sign the certification stating that the refrigerant will be reprocessed to all of the specifications in Appendix A of this subpart (based on ARI Standard 700–1995, *Specification for Fluorocarbons and Other Refrigerants*) that are applicable to that refrigerant, that the refrigerant's conformance to these specifications will be verified using the analytical methodology prescribed in Appendix A (which includes the primary methodologies included in the appendix to the ARI Standard 700–1995), that no more than 1.5 percent of the refrigerant will be released during the reclamation process, that wastes from the reclamation process will be properly disposed of, that the owner or responsible officer of the reclaimer will maintain records and submit reports in accordance with § 82.166(g) and (h), and that the information given is true and correct. The certification should be sent to the following address: U.S. Environmental Protection Agency; Global Programs Division (6205J); 1200 Pennsylvania Avenue, NW., Washington, DC 20460; Attn: Section 608 Recycling Program Manager—Reclaimer Certification.

(f) Certificates are not transferable. In the event of a change in ownership of an entity which reclaims refrigerant, the new owner of the entity shall certify within 30 days of the change of ownership pursuant to this section.

(g) Failure to abide by any of the provisions of this subpart may result in revocation or suspension of the certification of the reclaimer in accordance with § 82.169. In such cases, the Administrator or her or his designated representative shall give notice to the organization setting forth the basis for her or his determination.

[58 FR 28712, May 14, 1993, as amended at 59 FR 42957, 42962, Aug. 19, 1994; 59 FR 55927, Nov. 9, 1994; 68 FR 43809, July 24, 2003; 69 FR 11980, Mar. 12, 2004]

### § 82.166 Reporting and recordkeeping requirements.

(a) All persons who sell or distribute or offer to sell or distribute any refrigerant must retain invoices that indicate the name of the purchaser, the date of sale, and the quantity of refrigerant purchased.

(b) Purchasers of refrigerant who employ certified technicians may provide evidence that at least one technician is properly certified to the wholesaler who sells them refrigerant; the wholesaler must then keep this information on file and may sell refrigerant to the purchaser or his authorized representative even if such purchaser or authorized representative is not a properly certified technician. In such cases, the purchaser must notify the wholesaler in the event that the purchaser no longer employs at least one properly certified technician. The wholesaler is then prohibited from selling refrigerants to the purchaser until such time as the purchaser employs at least one properly certified technician. At that time, the purchaser must provide new evidence that at least one technician is properly certified.

(c) Approved equipment testing organizations must maintain records of equipment testing and performance and a list of equipment that meets EPA requirements. A list of all certified equipment shall be submitted to EPA within 30 days of the organization's approval by EPA and annually at the end of each calendar year thereafter.

(d) Approved equipment testing organizations shall submit to EPA within 30 days of the certification of a new model line of recycling or recovery equipment the name of the manufacturer and the name and/or serial number of the model line.

(e) Approved equipment testing organizations shall notify EPA if retests of equipment or inspections of manufacturing facilities conducted pursuant to § 82.158(j) show that a previously certified model line fails to meet EPA requirements. Such notification must be received within thirty days of the retest or inspection.

(f) Programs certifying technicians must maintain records in accordance with section (g) of appendix D of this subpart.

(g) Reclaimers must maintain records of the names and addresses of persons sending them material for reclamation and the quantity of the material (the combined mass of refrigerant and contaminants) sent to them for reclamation. Such records shall be maintained on a transactional basis.

(h) Reclaimers must maintain records of the quantity of material sent to them for reclamation, the mass of refrigerant reclaimed, and the mass of waste products. Reclaimers must report this information to the Administrator annually within 30 days of the end of the calendar year.

(i) Persons disposing of small appliances, MVACs, and MVAC-like appliances must maintain copies of signed statements obtained pursuant to § 82.156(f)(2).

(j) Persons servicing appliances normally containing 50 or more pounds of refrigerant must provide the owner/operator of such appliances with an invoice or other documentation, which indicates the amount of refrigerant added to the appliance.

(k) Owners/operators of appliances normally containing 50 or more pounds of refrigerant must keep servicing records documenting the date and type of service, as well as the quantity of refrigerant added. The owner/operator must keep records of refrigerant purchased and added to such appliances in cases where owners add their own refrigerant. Such records should indicate the date(s) when refrigerant is added.

(l) Technicians certified under § 82.161 must keep a copy of their certificate at their place of business.

(m) All records required to be maintained pursuant to this section must be kept for a minimum of three years unless otherwise indicated. Entities that dispose of appliances must keep these records on-site.

(n) The owners or operators of appliances must maintain on-site and report to EPA Headquarters at the address listed in § 82.160 the information specified in paragraphs (n)(1), (n)(2), and (n)(3) of this section, within the timelines specified under § 82.156 (i)(1), (i)(2), (i)(3) and (i)(5) where such reporting or recordkeeping is required. This information must be relevant to the affected appliance.

(1) An initial report to EPA under § 82.156(i)(1)(i), (i)(2), or (i)(5)(i) regarding why more than 30 days are needed to complete repairs must include: Identification of the facility; the leak rate; the method used to determine the leak rate and full charge; the date a leak rate above the applicable leak rate was discovered; the location of leak(s) to the extent determined to date; any repair work that has been completed thus far and the date that work was completed; the reasons why more than 30 days are needed to complete the work and an estimate of when the work will be completed. If changes from the original estimate of when work will be completed result in extending the completion date from the date submitted to EPA, the reasons for these changes must be documented and submitted to EPA within 30 days of discovering the need for such a change.

(2) If the owners or operators intend to establish that the appliance's leak rate does not exceed the applicable allowable leak rate in accordance with § 82.156(i)(3)(v), the owner or operator must submit a plan to fix other outstanding leaks for which repairs are planned but not yet completed to achieve a rate below the applicable allowable leak rate. A plan to fix other outstanding leaks in accordance with § 82.156(i)(3)(v) must include the following information: The identification of the facility; the leak rate; the method used to determine the leak rate and full charge; the date a leak rate above

the applicable allowable leak rate was discovered; the location of leak(s) to the extent determined to date; and any repair work that has been completed thus far, including the date that work was completed. Upon completion of the repair efforts described in the plan, a second report must be submitted that includes the date the owner or operator submitted the initial report concerning the need for additional time beyond the 30 days and notification of the owner or operator's determination that the leak rate no longer exceeds the applicable allowable leak rate. This second report must be submitted within 30 days of determining that the leak rate no longer exceeds the applicable allowable leak rate.

(3) Owners or operators must maintain records of the dates, types, and results of all initial and follow-up verification tests performed under § 82.156(i)(3). Owners or operators must submit this information to EPA within 30 days after conducting each test only where required under § 82.156 (i)(1), (i)(2), (i)(3) and (i)(5). These reports must also include: Identification and physical address of the facility; the leak rate; the method used to determine the leak rate and full charge; the date a leak rate above the applicable allowable leak rate was discovered; the location of leak(s) to the extent determined to date; and any repair work that has been completed thus far and the date that work was completed. Submitted reports must be dated and include the name of the owner or operator of the appliance, and must be signed by an authorized company official.

(o) The owners or operators of appliances must maintain on-site and report to EPA at the address specified in § 82.160 the following information where such reporting and recordkeeping is required and in the timelines specified in § 82.156 (i)(7) and (i)(8), in accordance with § 82.156 (i)(7) and (i)(8). This information must be relevant to the affected appliance and must include:

(1) The identification of the industrial process facility;

(2) The leak rate;

(3) The method used to determine the leak rate and full charge;

(4) The date a leak rate above the applicable allowable rate was discovered.

(5) The location of leaks(s) to the extent determined to date;

(6) Any repair work that has been completed thus far and the date that work was completed;

(7) A plan to complete the retrofit or retirement of the system;

(8) The reasons why more than one year is necessary to retrofit or retire the system;

(9) The date of notification to EPA; and

(10) An estimate of when retrofit or retirement work will be completed. If the estimated date of completion changes from the original estimate and results in extending the date of completion, the owner or operator must submit to EPA the new estimated date of completion and documentation of the reason for the change within 30 days of discovering the need for the change, and must retain a dated copy of this submission.

(p)(1) Owners or operators who wish to exclude purged refrigerants that are destroyed from annual leak rate calculations must maintain records on-site to support the amount of refrigerant claimed as sent for destruction. Records shall be based on a monitoring strategy that provides reliable data to demonstrate that the amount of refrigerant claimed to have been destroyed is not greater than the amount of refrigerant actually purged and destroyed and that the 98 percent or greater destruction efficiency is met. Records shall include flow rate, quantity or concentration of the refrigerant in the vent stream, and periods of purge flow.

(2) Owners or operators who wish to exclude purged refrigerants that are destroyed from annual leak rate calculations must maintain on-site and make available to EPA upon request the following information after the first time the exclusion is utilized by the facility:

(i) The identification of the facility and a contact person, including the address and telephone number;

(ii) A general description of the refrigerant appliance, focusing on aspects of the appliance relevant to the purging of refrigerant and subsequent destruction;

(iii) A description of the methods used to determine the quantity of refrigerant sent for destruction and type of records that are being kept by the owners or operators where the appliance is located;

(iv) The frequency of monitoring and data-recording; and

(v) A description of the control device, and its destruction efficiency.

This information must also be included, where applicable, in any reporting requirements required for compliance with the leak repair and retrofit requirements for industrial process refrigeration equipment, as set forth in paragraphs (n) and (o) of this section.

(q) Owners or operators choosing to determine the full charge as defined in § 82.152 of an affected appliance by using an established range or using that methodology in combination with other methods for determining the full charge as defined in § 82.152 must maintain the following information:

(1) The identification of the owner or operator of the appliance;

(2) The location of the appliance;

(3) The original range for the full charge of the appliance, its midpoint, and how the range was determined;

(4) Any and all revisions of the full charge range and how they were determined; and

(5) The dates such revisions occurred.

[58 FR 28712, May 14, 1993, as amended at 59 FR 42957, Aug. 19, 1994; 60 FR 40443, Aug. 8, 1995; 69 FR 11981, Mar. 12, 2004; 70 FR 1992, Jan. 11, 2005]

### § 82.169 Suspension and revocation procedures.

(a) Failure to abide by any of the provisions of this subpart may result in the revocation or suspension of the approval to certify technicians (under § 82.161), approval to act as a recovery/recycling equipment testing organization (under § 82.160), or reclaimer certification (under § 82.164), hereafter referred to as the ''organization.'' In such cases, the Administrator or her or his designated representative shall give notice of an impending suspension to the person or organization setting forth the facts or conduct that provide the basis for the revocation or suspension.

(b) Any organization that has received notice of an impending suspension or revocation may choose to request a hearing and must file that request in writing within 30 days of the date of the Agency's notice at the address listed in § 82.160 and shall set forth their objections to the revocation or suspension and data to support the objections.

(c) If the Agency does not receive a written request for a hearing within 30 days of the date of the Agency's notice, the revocation will become effective upon the date specified in the notice of an impending suspension.

(d) If after review of the request and supporting data, the Administrator or her or his designated representative finds that the request raises a substantial factual issue, she or he shall provide the organization with a hearing.

(e) After granting a request for a hearing the Administrator or her or his designated representative shall designate a Presiding Officer for the hearing.

(f) The hearing shall be held as soon as practicable at a time and place determined by the Administrator, the designated representative, or the Presiding Officer.

(g) The Administrator or her or his designated representative may, at his or her discretion, direct that all argument and presentation of evidence be concluded within a specified period established by the Administrator or her or his designated representative. Said period may be no less than 30 days from the date that the first written offer of a hearing is made to the applicant. To expedite proceedings, the Administrator or her or his designated representative may direct that the decision of the Presiding Officer (who need not be the Administrator) shall be the final EPA decision.

(h) Upon appointment pursuant to paragraph (e) of this section, the Presiding Officer will establish a hearing file. The file shall consist of the following:

(1) The notice issued by the Administrator under § 82.169(a);

(2) the request for a hearing and the supporting data submitted therewith;

(3) all documents relating to the request for certification and all documents submitted therewith; and

(4) correspondence and other data material to the hearing.

(i) The hearing file will be available for inspection by the petitioner at the office of the Presiding Officer.

(j) An applicant may appear in person or may be represented by counsel or by any other duly authorized representative.

(k) The Presiding Officer, upon the request of any party or at his or her discretion, may arrange for a pre-hearing conference at a time and place he or she specifies. Such pre-hearing conferences will consider the following:

(1) Simplification of the issues;

(2) Stipulations, admissions of fact, and the introduction of documents;

(3) Limitation of the number of expert witnesses;

(4) Possibility of agreement disposing of any or all of the issues in dispute; and

(5) Such other matters as may aid in the disposition of the hearing, including such additional tests as may be agreed upon by the parties.

(l) The results of the conference shall be reduced to writing by the Presiding Officer and made part of the record.

(m) Hearings shall be conducted by the Presiding Officer in an informal but orderly and expeditious manner. The parties may offer oral or written evidence, subject to the exclusion by the Presiding Officer of irrelevant, immaterial, and repetitious evidence.

(n) Witnesses will not be required to testify under oath. However, the Presiding Officer shall call to the attention of witnesses that their statements may be subject to the provisions of 18 U.S.C. 1001, which imposes penalties for knowingly making false statements or representations or using false documents in any matter within the jurisdiction of any department or agency of the United States.

(o) Any witness may be examined or cross-examined by the Presiding Officer, the parties, or their representatives.

(p) Hearings shall be reported verbatim. Copies of transcripts of proceedings may be purchased by the petitioner from the reporter.

(q) All written statements, charts, tabulations, and similar data offered in evidence at the hearings shall, upon a showing satisfactory to the Presiding Officer of their authenticity, relevancy, and materiality, be received in evidence and shall constitute a part of the record.

(r) Oral argument may be permitted at the discretion of the Presiding Officer and shall be reported as part of the record unless otherwise ordered by the Presiding Officer.

(s) The Presiding Officer shall make an initial decision that shall include written findings and conclusions and the reasons or basis regarding all the material issues of fact, law, or discretion presented on the record. The findings, conclusions, and written decision shall be provided to the parties and made a part of the record. The initial decision shall become the decision of the Administrator without further proceedings, unless there is an appeal to the Administrator or motion for review by the Administrator within 20 days of the date the initial decision was filed.

(t) On appeal from or review of the initial decision, the Administrator or her or his designated representative shall have all the powers which he or she would have in making the initial decision, including the discretion to require or allow briefs, oral argument, the taking of additional evidence, or a remand to the Presiding Officer for additional proceedings. The decision by the Administrator or her or his designated representative shall include written findings and conclusions and the reasons or basis therefore on all the material issues of fact, law, or discretion presented on the appeal or considered in the review.

[68 FR 43809, July 24, 2003]

## APPENDIX A TO SUBPART F OF PART 82—SPECIFICATIONS FOR FLUOROCARBON AND OTHER REFRIGERANTS

This appendix is based on the Air-Conditioning and Refrigeration Institute Standard 700–1995.

### *Section 1. Purpose*

1.1 *Purpose.* The purpose of this standard is to evaluate and accept/reject refrigerants regardless of source (*i.e.*, new, reclaimed and/or repackaged) for use in new and existing

refrigeration and air-conditioning products as required under 40 CFR part 82.

1.1.1 *Intent.* This standard is intended for the guidance of the industry including manufacturers, refrigerant reclaimers, repackagers, distributors, installers, servicemen, contractors and for consumers.

1.1.2 *Review and Amendment.* This standard is subject to review and amendment as the technology advances.

*Section 2. Scope*

2.1 *Scope.* This standard specifies acceptable levels of contaminants (purity requirements) for various fluorocarbon and other refrigerants regardless of source and lists acceptable test methods. These refrigerants are R–113; R–123; R–11; R–114; R–124; R–12; R–401C; R–406A; R–500; R–401A; R–409A; R–401B; R–411A; R–22; R–411B; R–502; R–402B; R–408A; R–402A; R–13; R–503 as referenced in the ANSI/ASHRAE Standard 34–1992. (American Society of Heating, Refrigerating and Air-conditioning Engineers, Inc., Standard 34–1992). Copies may be obtained from ASHRAE Publications Sales, 1791 Tullie Circle, NE, Atlanta, GA 30329. Copies may also be inspected at Environmental Protection Agency; Office of Air and Radiation Docket; 1301 Constitution Ave., NW., Room B108; Washington, DC 20460.

*Section 3. Definitions*

3.1 *''Shall,'' ''Should,'' ''Recommended,''* or *''It Is Recommended.''* ''Shall,'' ''should,'' ''recommended,'' or ''it is recommended'' shall be interpreted as follows:

3.1.1 *Shall.* Where ''shall'' or ''shall not'' is used for a provision specified, that provision is mandatory if compliance with the appendix is claimed.

3.1.2 *Should, Recommended,* or *It is Recommended.* ''Should'', ''recommended'', or ''it is recommended'' is used to indicate provisions which are not mandatory but which are desirable as good practice.

*Section 4. Characterization of Refrigerants and Contaminants*

4.1 *Characterization.* Characterization of refrigerants and contaminants addressed are listed in the following general classifications:

4.1.1 *Characterization*

a. Gas Chromatography

b. Boiling point and boiling point range

4.1.2 *Contaminants*

a. Water

b. Chloride

c. Acidity

d. High boiling residue

e. Particulates/solids

f. Non-condensables

g. Impurities including other refrigerants

*Section 5. Sampling, Summary of Test Methods and Maximum Permissible Contaminant Levels*

5.1 *Referee Test.* The referee test methods for the various contaminants are summarized in the following paragraphs. Detailed test procedures are included in *Appendix C to ARI Standard 700–1995: Analytical Procedures for ARI Standard 700–1995,* 1995, Air-Conditioning and Refrigeration Institute. *Appendix C to ARI Standard 700–1995* is incorporated by reference. [This incorporation by reference was approved by the Director of the Federal Register in accordance with 5 U.S.C. 552(a) and 1 CFR part 51. Copies may be obtained from the Air-Conditioning and Refrigeration Institute, 4301 North Fairfax Drive, Arlington, Virginia 22203. Copies may also be inspected at Public Docket No. A–92–01, Environmental Protection Agency, 1301 Constitution Ave., NW., Washington, DC, 20460 or at the Office of the Federal Register, 800 North Capitol Street, NW., Suite 700, Washington, DC.] If alternative test methods are employed, the user must be able to demonstrate that they produce results equivalent to the specified referee method.

5.2 *Refrigerant Sampling*

5.2.1 *Sampling Precautions.* Special precautions should be taken to assure that representative samples are obtained for analysis. Sampling shall be done by trained laboratory personnel following accepted sampling and safety procedures.

5.2.2 *Gas Phase Sample.* A gas phase sample shall be obtained for determining the non-condensables. Since non-condensable gases, if present, will concentrate in the vapor phase of the refrigerant, care must be exercised to eliminate introduction of air during the sample transfer. Purging is not an acceptable procedure for a gas phase sample since it may introduce a foreign product. Since R–11, R–113, and R–123 have normal boiling points at or above room temperature, non-condensable determination is not required for these refrigerants.

5.2.2.1 *Connection.* The sample cylinder shall be connected to an evacuated gas sampling bulb by means of a manifold. The manifold should have a valve arrangement that facilitates evacuation of all connecting tubing leading to the sampling bulb.

5.2.2.2 *Equalizing Pressures.* After the manifold has been evacuated, close the valve to the pump and open the valve on the system. Allow the pressure to equilibrate and close valves.

5.2.3 *Liquid Phase Sample.* A liquid phase sample is required for all tests listed in this standard except the test for non-condensables.

5.2.3.1 *Preparation.* Place a clean, empty sample cylinder with the valve open in an oven at 110 °C (230 °F) for one hour. Remove it from the oven while hot, immediately connect to an evacuation system and evacuate

to less than 1 mm mercury (1000 microns). Close the valve and allow it to cool. Weigh the empty cylinder.

5.2.3.2 *Manifolding*. The valve and lines from the unit to be sampled shall be clean and dry. The cylinder shall be connected to an evacuated gas sampling cylinder by means of a manifold. The manifold should have a valve arrangement that facilitates evacuation of all connecting tubing leading to the sampling cylinder.

5.2.3.3 *Liquid Sampling*. After the manifold has been evacuated, close the valve to the pump and open the valve on the system. Take the sample as a liquid by chilling the sample cylinder slightly. Accurate analysis requires that the sample container be filled to at least 60% by volume, however under no circumstances should the cylinder be filled to more than 80% by volume. This can be accomplished by weighing the empty cylinder and then the cylinder with refrigerant. When the desired amount of refrigerant has been collected, close the valve(s) and disconnect the sample cylinder immediately.

5.2.3.4 *Record Weight*. Check the sample cylinder for leaks and record the gross weight.

5.3 *Refrigerant Characterization*.

5.3.1 *Primary Method*. The primary method shall be gas chromatography (GC) as described in *Appendix C to ARI Standard 700–1995*. The chromatogram of the sample shall be compared to known standards.

5.3.2 *Alternative Method*. Determination of the boiling point and boiling point range is an acceptable alternative test method which can be used to characterize refrigerants. The test method shall be that described in the Federal Specification for ''Fluorocarbon Refrigerants,'' BB–F–1421 B, dated March 5, 1982, section 4.4.3.

5.3.3 *Required Values*. The required values for boiling point and boiling point range are given in Table 1A, *Physical Properties of Single Component Refrigerants;* Table 1B, *Physical Properties of Zeotropic Blends (400 Series Refrigerants);* and Table 1C, *Physical Properties of Azeotropic Blends (500 Series Refrigerants)*.

5.4 *Water Content*.

5.4.1 *Method*. The Coulometric Karl Fischer Titration shall be the primary test method for determining the water content of refrigerants. This method is described in *Appendix C to ARI Standard 700–1995*. This method can be used for refrigerants that are either a liquid or a gas at room temperature, including refrigerants 11, 113, and 123. For all refrigerants, the sample for water analysis shall be taken from the liquid phase of the container to be tested. Proper operation of the analytical method requires special equipment and an experienced operator. The precision of the results is excellent if proper sampling and handling procedures are followed. Refrigerants containing a colored dye can be successfully analyzed for water using this method.

5.4.2 *Limits*. The value for water content shall be expressed as parts per million (ppm) by weight and shall not exceed the maximum specified (*see* Tables 1A, 1B, and 1C).

5.5 *Chloride*.

The refrigerant shall be tested for chloride as an indication of the presence of hydrochloric acid and/or metal chlorides. The recommended procedure is intended for use with new or reclaimed refrigerants. Significant amounts of oil may interfere with the results by indicating a failure in the absence of chloride.

5.5.1 *Method*. The test method shall be that described in *Appendix C to ARI Standard 700–1995*. The test will show noticeable turbidity at chloride levels of about 3 ppm by weight or higher.

5.5.2 *Turbidity*. The results of the test shall not exhibit any sign of turbidity. Report the results as ''pass'' or ''fail.''

5.6 *Acidity*.

5.6.1 *Method*. The acidity test uses the titration principle to detect any compound that is highly soluble in water and ionizes as an acid. The test method shall be that described in *Appendix C to ARI Standard 700–1995*. This test may not be suitable for determination of high molecular weight organic acids; however these acids will be found in the high boiling residue test outlined in 5.7. The test requires a 100 to 120 gram sample and has a detection limit of 0.1 ppm by weight calculated as HCl.

5.6.2 *Limits*. The maximum permissible acidity is 1 ppm by weight as HCl.

5.7 *High Boiling Residue*.

5.7.1 *Method*. High boiling residue shall be determined by measuring the residue of a standard volume of refrigerant after evaporation. The refrigerant sample shall be evaporated at room temperature or at a temperature 45 °C (115 °F) for all refrigerants, except R–113 which shall be evaporated at 60 °C (140 °F), using a Goetz bulb as specified in *Appendix C to ARI Standard 700–1995*. Oils and/or organic acids will be captured by this method.

5.7.2 *Limits*. The value for high boiling residue shall be expressed as a percentage by volume and shall not exceed the maximum percent specified (*see* Tables 1A, 1B, and 1C). An alternative gravimetric method is described in *Appendix C to ARI Standard 700–1995*.

5.8 *Method of Tests for Particulates and Solids*.

5.8.1 *Method*. A measured amount of sample is evaporated from a Goetz bulb under controlled temperature conditions. The particulates/solids shall be determined by visual examination of the Goetz bulb prior to the evaporation of refrigerant. Presence of dirt, rust or other particulate contamination is reported as ''fail.'' For details of this test

method, refer to Part 3 of *Appendix C to ARI Standard 700–1995*.

5.9 *Non-Condensables*.

5.9.1 *Sample*. A vapor phase sample shall be used for determination of non-condensables. Non-condensable gases consist primarily of air accumulated in the vapor phase of refrigerants. The solubility of air in the refrigerants liquid phase is extremely low and air is not significant as a liquid phase contaminant. The presence of non-condensable gases may reflect poor quality control in transferring refrigerants to storage tanks and cylinders.

5.9.2 *Method*. The test method shall be gas chromatography with a thermal conductivity detector as described in *Appendix C to ARI Standard 700–1995*.

5.9.3 *Limit*. The maximum level of non-condensables in the vapor phase of a refrigerant in a container shall not exceed 1.5% by volume (*see* Tables 1A, 1B, and 1C).

5.10 *Impurities, including Other Refrigerants*.

5.10.1 *Method*. The amount of other impurities including other refrigerants in the subject refrigerant shall be determined by gas chromatography as described in *Appendix C to ARI Standard 700–1995*.

5.10.2 *Limit*. The subject refrigerant shall not contain more than 0.5% by weight of impurities including other refrigerants (*see* Tables 1A, 1B, and 1C).

*Section 6. Reporting Procedure*

6.1 *Reporting Procedure*. The source (manufacturer, reclaimer or repackager) of the packaged refrigerant shall be identified. The refrigerant shall be identified by its accepted refrigerant number and/or its chemical name. Maximum permissible levels of contaminants are shown in Tables 1A, 1B, and 1C. Test results shall be tabulated in a like manner.

**Table 1A. Physical Properties of Single Component Refrigerants**

| | REPORTING UNITS | REFERENCE (SUBCLAUSE) | R-11 | R-12 | R-13 | R-22 | R-113 | R-114 | R-123 | R-124 |
|---|---|---|---|---|---|---|---|---|---|---|
| *CHARACTERISTICS:* | | | | | | | | | | |
| BOILING POINT[1] | ·F · 1.00 ATM | --- | 74.9 | -21.6 | -114.6 | -41.4 | 117.6 | 38.8 | 82.6 | 12.2 |
| | ·C · 1.00 ATM | --- | 23.8 | -29.8 | -81.4 | -40.8 | 47.6 | 3.8 | 27.9 | -11.0 |
| BOILING POINT RANGE[1] | K | --- | 0.3 | 0.3 | 0.5 | 0.3 | 0.3 | 0.3 | 0.3 | 0.3 |
| TYPICAL ISOMER CONTENT | BY WEIGHT | --- | | | | | 0-1% R-113A | 0-30% R-114A | 0-8% R-123A | 0-5% R-124A |
| *VAPOR PHASE CONTAMINANTS:* | | | | | | | | | | |
| AIR AND OTHER NON-CONDENSABLES | % BY VOLUME · 25·C | 5.9 | N/A[2] | 1.5 | 1.5 | 1.5 | N/A[2] | 1.5 | N/A[2] | 1.5 |
| *LIQUID PHASE CONTAMINANTS:* | | | | | | | | | | |
| WATER | PPM BY WEIGHT | 5.4 | 20 | 10 | 10 | 10 | 20 | 10 | 20 | 10 |
| ALL OTHER IMPURITIES INCLUDING REFRIGERANTS | % BY WEIGHT | 5.1 | 0.50 | 0.50 | 0.50 | 0.50 | 0.50 | 0.50 | 0.50 | 0.50 |
| HIGH BOILING RESIDUE | % BY VOLUME | 5.7 | 0.01 | 0.01 | 0.05 | 0.01 | 0.03 | 0.01 | 0.01 | 0.01 |
| PARTICULATES/SOLIDS | VISUALLY CLEAN TO PASS | 5.8 | PASS | PASS | PASS | PASS | PASS | PASS | PASS | PASS |
| ACIDITY | PPM BY WEIGHT | 5.6 | 1.0 | 1.0 | 1.0 | 1.0 | 1.0 | 1.0 | 1.0 | 1.0 |
| CHLORIDES[3] | NO VISIBLE TURBIDITY | 5.5 | PASS | PASS | PASS | PASS | PASS | PASS | PASS | PASS |

**Table 1B. Physical Properties of Zeotropic Blends (400 Series Refrigerants)**

| | REPORTING UNITS | REFERENCE (SUBCLAUSE) | R-401A | R-401B | R-402A | R-402B | R-406A [3] |
|---|---|---|---|---|---|---|---|
| *CHARACTERISTICS:* | | | | | | | |
| REFRIGERANT COMPONENTS | | | R-22/152A/124 | R-22/152A/124 | R-125/290/22 | R-125/290/22 | R-22/600A/142B |
| NOMINAL COMP, WEIGHT% | | | 53/13/34 | 61/11/28 | 60/2/38 | 38/2/60 | 55/4/41 |
| ALLOWABLE COMP, WEIGHT% | | | 51-54/11.5-13.5/33-35 | 59-63/9.5-11.5/27-29 | 58-62/1-3/36-40 | 36-40/1-3/58-62 | 53-57/3-5/40-42 |
| BOILING POINT [1] | °F @ 1.00 ATM | --- | -27.7 TO -18.1 | -30.4 TO -21.2 | -54.8 TO -53.9 | -53.3 TO -49.0 | -32.7 TO -15.0 |
| | °C @ 1.00 ATM | --- | -33.2 TO -27.8 | -34.7 TO -29.6 | -48.2 TO -47.7 | -47.4 TO -45.0 | -36.0 TO -26.1 |
| BOILING POINT RANGE [1] | K | --- | 5.4 | 5.1 | 0.5 | 2.4 | 9.9 |
| *VAPOR PHASE CONTAMINANTS:* | | | | | | | |
| AIR AND OTHER NON-CONDENSABLES | % BY VOLUME 25°C | 5.9 | 1.5 | 1.5 | 1.5 | 1.5 | 1.5 |
| *LIQUID PHASE CONTAMINANTS:* | | | | | | | |
| WATER | PPM BY WEIGHT | 5.4 | 10 | 10 | 10 | 10 | 10 |
| ALL OTHER IMPURITIES INCLUDING REFRIGERANTS | % BY WEIGHT | 5.1 | 0.50 | 0.50 | 0.50 | 0.50 | 0.50 |
| HIGH BOILING RESIDUE | % BY VOLUME | 5.7 | 0.01 | 0.01 | 0.01 | 0.01 | 0.01 |
| PARTICULATES/SOLIDS | VISUALLY CLEAN TO PASS | 5.8 | PASS | PASS | PASS | PASS | PASS |
| ACIDITY | PPM BY WEIGHT | 5.6 | 1.0 | 1.0 | 1.0 | 1.0 | 1.0 |

**Table 1B (continued). Physical Properties of Zeotropic Blends (400 Series Refrigerants)**

| | REPORTING UNITS | REFERENCE (SUBCLAUSE) | R-407C | R-408A | R-409A | R-410A | R-410B | R-411A [3] | R-411B [3] |
|---|---|---|---|---|---|---|---|---|---|
| *CHARACTERISTICS:* | | | | | | | | | |
| REFRIGERANT COMPONENTS | | | R-32/125/134A | R125/143A/22 | R22/124/142B | R32/125 | R32/125 | R1270/22/152A | R1270/22/152A |
| NOMINAL COMP, WEIGHT% | | | 23/25/52 | 7/46/47 | 60/25/15 | 50/50 | 45/55 | 1.5/87.5/11.0 | 3/94/3 |
| ALLOWABLE COMP, WEIGHT% | | | 22-24/23-27/50-54 | 5-9/45-47/45-49 | 58-62/23-27/14-16 | 48.5-50.5/49.4-51.5 | 44-46/54-56 | 0.5-1.5/87.5-89.5/10-11 | 2-3/94-96/2-3 |
| BOILING POINT [1] | ·F · 1.00 ATM | --- | 46.4 TO -33.0 | -48.8 TO -47.9 | -32.4 TO -18.2 | -60.1 TO -60.0 | -60.3 TO -60.2 | | |
| | ·C · 1.00 ATM | --- | -43.6 TO -36.6 | -44.9 TO -44.4 | -35.8 TO -27.9 | -51.2 TO -51.1 | -51.3 TO -51.2 | | |
| BOILING POINT RANGE [1] | K | --- | 7.0 | 0.5 | 7.9 | 0.1 | 0.1 | | |
| VAPOR PHASE CONTAMINANTS: AIR AND OTHER NON-CONDENSABLES | % BY VOLUME · 25·C | 5.9 | 1.5 | 1.5 | 1.5 | 1.5 | 1.5 | 1.5 | 1.5 |
| *LIQUID PHASE CONTAMINANTS:* | | | | | | | | | |
| WATER | PPM BY WEIGHT | 5.4 | 10 | 10 | 10 | 10 | 10 | 10 | 10 |
| ALL OTHER IMPURITIES INCLUDING REFRIGERANTS | % BY WEIGHT | 5.1 | 0.50 | 0.50 | 0.50 | 0.50 | 0.50 | 0.50 | 0.50 |
| HIGH BOILING RESIDUE | % BY VOLUME | 5.7 | 0.01 | 0.01 | 0.01 | 0.01 | 0.01 | 0.01 | 0.01 |
| PARTICULATES/SOLIDS | VISUALLY CLEAN TO PASS | 5.8 | PASS | PASS | PASS | PASS | PASS | PASS | PASS |
| ACIDITY | PPM BY WEIGHT | 5.6 | 1.0 | 1.0 | 1.0 | 1.0 | 1.0 | 1.0 | 1.0 |

**Table 1C. Physical Properties of Azeotropic Blends (500 Series Refrigerants)**

| | REPORTING UNITS | REFERENCE (SUBCLAUSE) | R500 | R502 | R503 | R507 | R508 [3] |
|---|---|---|---|---|---|---|---|
| *CHARACTERISTICS:* | | | | | | | |
| REFRIGERANT COMPONENTS | | | R12/152A | R22/115 | R23/13 | R125/143A | R23/116 |
| NOMINAL COMP, WEIGHT% | | | 73.8/26.2 | 48.8/51.2 | 40.1/59.9 | 50/50 | 39/61 |
| ALLOWABLE COMP, WEIGHT% | | | 72.8-74.8/ 25.2-27.2 | 44.8-52.8/ 47.2-55.2 | 39-41/ 59-61 | 49-51/ 49-51 | 37-41/ 59-63 |
| BOILING POINT [1] | °F · 1.00 ATM | --- | -28.1 | -49.7 | -127.7 | -52.1 | -123.5 |
| | °C · 1.00 ATM | --- | -33.4 | -45.4 | -88.7 | -46.7 | -86.4 |
| BOILING POINT RANGE [1] | K | --- | 0.5 | 0.5 | 0.5 | 0.5 | 0.5 |
| *VAPOR PHASE CONTAMINANTS:* | | | | | | | |
| AIR AND OTHER NON-CONDENSABLES | % BY VOLUME 25°C | 5.9 | 1.5 | 1.5 | 1.5 | 1.5 | 1.5 |
| *LIQUID PHASE CONTAMINANTS:* | | | | | | | |
| WATER | PPM BY WEIGHT | 5.4 | 10 | 10 | 10 | 10 | 10 |
| ALL OTHER IMPURITIES INCLUDING REFRIGERANTS | % BY WEIGHT | 5.1 | 0.50 | 0.50 | 0.50 | 0.50 | 0.50 |
| HIGH BOILING RESIDUE | % BY VOLUME | 5.7 | 0.05 | 0.01 | 0.01 | 0.01 | 0.01 |
| PARTICULATES/SOLIDS | VISUALLY CLEAN TO PASS | 5.8 | PASS | PASS | PASS | PASS | PASS |
| ACIDITY | PPM BY WEIGHT | 5.6 | 1.0 | 1.0 | 1.0 | 1.0 | 1.0 |
| CHLORIDES [2] | NO VISIBLE TURBIDITY | 5.5 | PASS | PASS | PASS | PASS | PASS |

[1] BOILING POINTS AND BOILING POINT RANGES, ALTHOUGH NOT REQUIRED, ARE PROVIDED FOR INFORMATIONAL PURPOSES.

[2] RECOGNIZED CHLORIDE LEVEL FOR PASS/FAIL IS 3PPM.

[3] SHADED COLUMNS DENOTE REFRIGERANTS FOR WHICH ANALYTICAL DATA IS NOT AVAILABLE.

## APPENDIX A. REFERENCES—NORMATIVE

Listed here are all standards, handbooks, and other publications essential to the formation and implementation of the standard. All references in this appendix are considered as part of this standard.

*ASHRAE Terminology of Heating, Ventilating, Air Conditioning and Refrigeration*, American Society of Heating Refrigeration and Air-Conditioning Engineers, 1992, 1791 Tullie Circle NE., Atlanta, GA 30329–2305; U.S.A.

ASHRAE Standard 34–1992, *Number Designation and Safety Classification of Refrigerants*, American Society of Heating Refrigeration and Air-Conditioning Engineers, 1992, 1791 Tullie Circle NE., Atlanta, GA 30329–2305; U.S.A.

*Appendix C to ARI Standard 700–1995: Analytical Procedures to ARI Standard 700–1995, Specifications for Fluorocarbon and Other Refrigerants*, Air-Conditioning and Refrigeration Institute, 1995, 4301 North Fairfax Drive, Suite 425, Arlington, VA 22203; U.S.A.

Federal Specification for *Fluorocarbon Refrigerants, BB–F–1421–B*, dated March 5, 1992,

Office of the Federal Register, National Archives and Records Administration, 1992, 800 North Capitol Street, NW., Washington, D.C. 20402; U.S.A.

[69 FR 11981, Mar. 12, 2004]

## APPENDIX A1 TO SUBPART F OF PART 82—GENERIC MAXIMUM CONTAMINANT LEVELS

| Contaminant | Reporting units |
|---|---|
| Air and Other Non-condensables. | 1.5% by volume @ 25 °C (N/A for refrigerants used in low-pressure appliances [1]). |
| Water | 10 ppm by weight 20 ppm by weight (for refrigerants used in low-pressure appliances [1]). |
| Other Impurities Including Refrigerant. | 0.50% by weight. |
| High boiling residue | 0.01% by volume. |
| Particulates/solids | visually clean to pass. |
| Acidity | 1.0 ppm by weight. |
| Chlorides (chloride level for pass/fail is 3ppm). | No visible turbidity. |

[1] Low-pressure appliances means an appliance that uses a refrigerant with a liquid phase saturation pressure below 45 psia at 104 °F.

### BLEND COMPOSITIONS (WHERE APPLICABLE)

| Nominal composition (by weight%) | Allowable composition (by weight%) |
|---|---|
| Component constitutes 25% or more | ±2.0 |
| Component constitutes less than 25% but greater than 10% | ±1.0 |
| Component constitutes less than or equal to 10% | ±0.5 |

[69 FR 11988, Mar. 12, 2004]

## APPENDIX B1 TO SUBPART F OF PART 82—PERFORMANCE OF REFRIGERANT RECOVERY, RECYCLING AND/OR RECLAIM EQUIPMENT

This appendix is based on the Air-Conditioning and Refrigeration Institute Standard 740–1993.

### REFRIGERANT RECOVERY/RECYCLING EQUIPMENT

*Section 1. Purpose*

1.1 *Purpose.* The purpose of this standard is to establish methods of testing for rating and evaluating the performance of refrigerant recovery, and/or recycling equipment, and general equipment requirements (herein referred to as ''equipment'') for containment or purity levels, capacity, speed, and purge loss to minimize emission into the atmosphere of designated refrigerants.

1.1.1 This standard is intended for the guidance of the industry, including manufacturers, refrigerant reclaimers, repackers, distributors, installers, servicemen, contractors and for consumers.

1.1.2 This standard is not intended to be used as a guide in defining maximum levels of contaminants in recycled or reclaimed refrigerants used in various applications.

1.2 *Review and Amendment.* This standard is subject to review and amendment as the technology advances.

*Section 2. Scope*

2.1 *Scope.* This standard defines general equipment requirements and the test apparatus, test mixtures, sampling and analysis techniques that will be used to determine the performance of recovery and/or recycling equipment for various refrigerants including R11, R12, R13, R22, R113, R114, R123, R134a, R500, R502, and R503, as referenced in the ANSI/ASHRAE Standard 34–1992, ''Number Designation of Refrigerants'' (American Society of Heating, Refrigerating, and Air Conditioning Engineers, Inc.).

*Section 3. Definitions*

3.1 *Recovered refrigerant.* Refrigerant that has been removed from a system for the purpose of storage, recycling, reclamation or transportation.

3.2 Recover. Reference 40 CFR 82.152.

3.3 Recycle. Reference 40 CFR 82.152.

3.4 Reclaim. Reference 40 CFR 82.152.

3.5 *Standard Contaminated Refrigerant Sample.* A mixture of new and/or reclaimed refrigerant and specified quantities of identified contaminants which are representative of field obtained, used refrigerant samples and which constitute the mixture to be processed by the equipment under test.

3.6 *Push/Pull Method.* The push/pull refrigerant recovery method is defined as the process of transferring liquid refrigerant from a refrigeration system to a receiving vessel by lowering the pressure in the vessel and raising the pressure in the system, and by connecting a separate line between the system liquid port and the receiving vessel.

3.7 *Recycle Rate.* The amount of refrigerant processed (in pounds) divided by the time elapsed in the recycling mode in pounds per minute. For equipment which uses a separate recycling sequence, the recycle rate does not include the recovery rate (or elapsed time). For equipment which does not use a separate recycling sequence, the recycle rate is a maximum rate based solely on the higher of the liquid or vapor recovery rate, by which the rated contaminant levels can be achieved.

3.8 *Equipment Classification.*

3.8.1 *Self Contained Equipment.* A refrigerant recovery or recycling system which is capable of refrigerant extraction without the assistance of components contained within an air conditioning or refrigeration system.

3.8.2 *System Dependent Equipment*. Refrigerant recovery equipment which requires for its operation the assistance of components contained in an air conditioning or refrigeration system.

3.9 *''Shall''*, *''Should''*, *''Recommended''* or *''It is Recommended''*, ''Shall'' ''Should'', ''recommended'', or ''it is recommended'' shall be interpreted as follows:

3.9.1 *Shall*. Where ''shall'' or ''shall not'' is used for a provision specified, that provision is mandatory if compliance with the standard is claimed.

3.9.2 *Should*, *Recommended*, or *It is Recommended*, ''Should'', ''recommended'', is used to indicate provisions which are not mandatory but which are desirable as good practice.

*Section 4. General Equipment Requirements*

4.1 The equipment manufacturer shall provide operating instructions, necessary maintenance procedures, and source information for replacement parts and repair.

4.2 The equipment shall indicate when any filter/drier(s) needs replacement. This requirement can be met by use of a moisture transducer and indicator light, by use of a sight glass/moisture indicator, or by some measurement of the amount of refrigerant processed such as a flow meter or hour meter. Written instructions such as ''to change the filter every 400 pounds, or every 30 days'' shall not be acceptable except for equipment in large systems where the Liquid Recovery Rate is greater than 25 lbs/min [11.3 Kg/min] where the filter/drier(s) would be changed for every job.

4.3 The equipment shall either automatically purge non-condensables if the rated level is exceeded or alert the operator that the non-condensable level has been exceeded. While air purge processes are subject to the requirements of this section, there is no specific requirement to include an air purge process for ''recycle'' equipment.

4.4 The equipment's refrigerant loss due to non-condensable purging shall not be exceeded 5% by weight of total recovered refrigerant. (See Section 9.4)

4.5 Internal hose assemblies shall not exceed a permeation rate of 12 pounds mass per square foot [5.8 g/cm$^2$] of internal surface per year at a temperature of 120 F [48.8 °C] for any designated refrigerant.

4.6 The equipment shall be evaluated at 75 F [24 °C] per 7.1. Normal operating conditions range from 50 °F to 104 F [10 °C to 40 °C].

4.7 *Exemptions:*

4.7.1 Equpment intended for recovery only shall be exempt from sections 4.2 and 4.3.

TABLE 1—STANDARD CONTAMINATED REFRIGERANT SAMPLES

| | R11 | R12 | R13 | R22 | R113 | R114 | R123 | R134a | R500 | R502 | R503 |
|---|---|---|---|---|---|---|---|---|---|---|---|
| Moisture content: PPM by weight of pure refrigerant ..... | 100 | 80 | 30 | 200 | 100 | 85 | 100 | 200 | 200 | 200 | 30 |
| Particulate content: PPM by weight of pure refrigerant characterized by[1] ..... | 80 | 80 | 80 | 80 | 80 | 80 | 80 | 80 | 80 | 80 | 80 |
| Acid content: PPM by weight of pure refrigerant—(mg KOH per kg refrig.) characterized by[2] ..... | 500 | 100 | NA | 500 | 400 | 200 | 500 | 100 | 100 | 100 | NA |
| Mineral oil content: % by weight of pure refrigerant ..... | 20 | 5 | NA | 5 | 20 | 20 | 20 | 5 | 5 | 5 | NA |
| Viscosity (SUS) ..... | 300 | 150 | ..... | 300 | 300 | 300 | 300 | 150 | 150 | 150 | |
| Non condensable gases air content % volume[3] ≤ | NA | 3 | 3 | 3 | NA | 3 | 3 | 3 | 3 | 3 | 3 |

[1] Particulate content shall consist of inert materials and shall comply with particulate requirements in *ASHRAE* Standard 63.2, ''Method of Testing of Filtration Capacity of Refrigerant Liquid Line Filters and Filter Driers.''

[2] Acid consists of 60% oleic acid and 40% hydrochloric acid on a total number basis.

[3] Synthetic ester based oil.

*Section 5. Contaminated Refrigerants*

5.1 The standard contaminated refrigerant sample shall have the characteristics specified in Table 1, except as provided in 5.2

5.2 Recovery equipment not rated for any specific contaminant can be tested with new or reclaimed refrigerant.

*Section 6. Test Apparatus*

6.1 Self Contained Equipment Test Apparatus. The apparatus as shown in Figure 1 consists of a 3 cubic foot [0.085 $m^3$] mixing chamber with a conical-shaped bottom, although a larger mixing chamber is permissible. The size of the mixing chamber depends upon the size of the equipment. The outlet at the bottom of the cone and all restrictions and valves for liquid and vapor refrigerant lines in the test apparatus shall be a minimum of 0.375 in. [9.5 mm] inside diameter or equivalent. The minimum inside diameter for large equipment for use on chillers shall be 1.5 in. [38 mm.]. The mixing chamber shall contain various ports for receiving liquid refrigerant, oil, and contaminants. A recirculating line connected from the bottom outlet through a recirculating pump and then to a top vapor port shall be provided for stirring of the mixture. Isolation valves may be required for the pump. Alternative stirring means may be used if demonstrated to be equally effective.

6.1.1 For liquid refrigerant feed, the liquid valve is opened. For vapor refrigerant feed, the vapor valve is opened and refrigerant passes through an evaporator coil. Flow is controlled by a thermostatic expansion valve to create 5 F [3 °C] superheat at an evaporator temperature of 70 F ±3 F[21 °C±2°]. The evaporator coil or equivalent evaporator means shall be either sized large enough for the largest system or be sized for each system.

6.1.2 An alternative method for vapor refrigerant feed is to pass through a boiler and then an automatic pressure regulating valve set at refrigerant saturation pressure at 75 F ±3 F [24 °C ±2 °C].

6.2 System Dependent Equipment Test Apparatus. This test apparatus is to be used for final recovery vacuum rating of all system dependent equipment.

6.2.1 The test apparatus shown in Figure 2 consists of a complete refrigeration system. The manufacturer shall identify the refrigerants to be tested. The test apparatus can be modified to facilitate operation or testing of the system dependent equipment if the modifications to the apparatus are specifically described within the manufacturer's literature. (*See Figure 2.*) A ¼ inch [6.3 mm] balance line shall be connected across the test apparatus between the high and low pressure sides, with an isolation valve located at the connection to the compressor high side. A ¼ inch [6.3 mm] access port with a valve core shall be located in the balance line for the purpose of measuring final recovery vacuum at the conclusion of the test.

FIGURE 1

Test Apparatus for Self-Contained Equipment

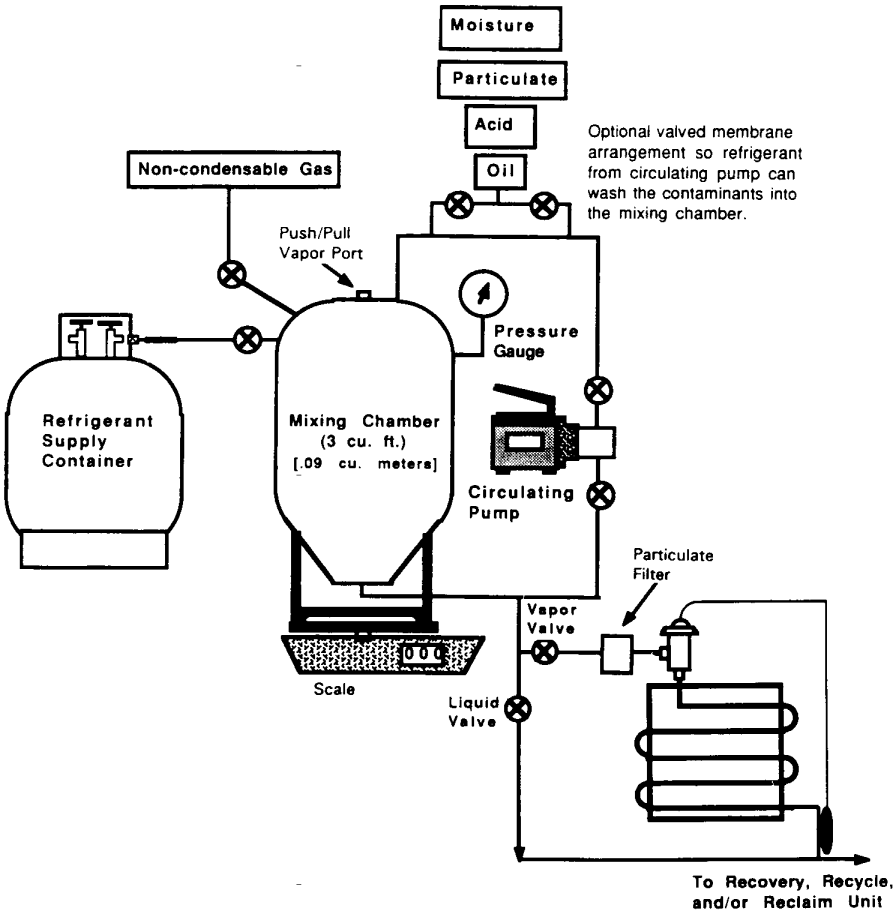

# FIGURE 2

## System-Dependent Equipment Test Apparatus

### Configuration of a standard air conditioning or refrigeration system for use as a test apparatus

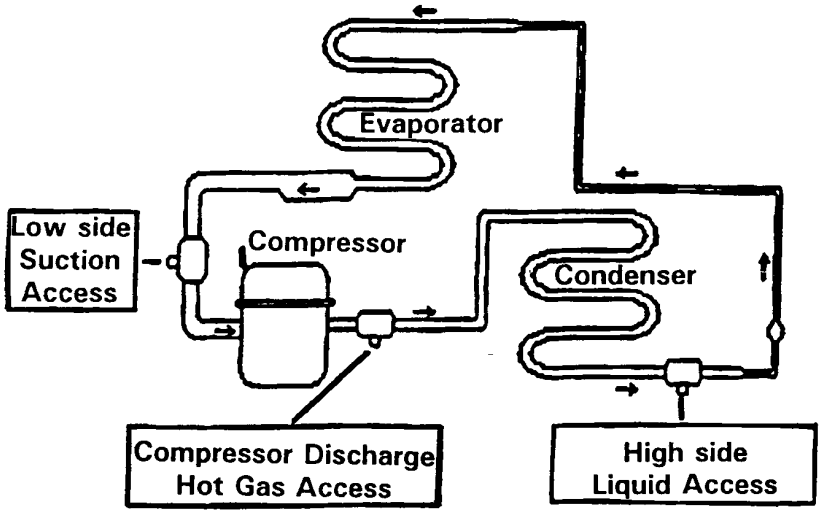


*Section 7. Performance Testing*

7.1 Contaminant removal and performance testing shall be conducted at 75 F ±2 F [23.9 °C ±1.1 °C].

7.1.1 The equipment shall be prepared for operation per the instruction manual.

7.1.2 The contaminated sample batch shall consist of not less than the sum of the amounts required to complete steps 7.1.2.2 and 7.1.2.3 below.

7.1.2.1 A liquid sample shall be drawn from the mixing chamber prior to starting the test to assure quality control of the mixing process.

7.1.2.2 Vapor refrigerant feed testing, if elected, shall normally be processed first. After the equipment reaches stabilized conditions of condensing temperature and/or storage tank pressure, the vapor feed recovery rate shall be measured. One method is to start measuring the vapor refrigerant recovery rate when 85% of refrigerant remains in the mixing chamber and continue for a period of time sufficient to achieve the accuracy in 9.2. If liquid feed is not elected, complete Step 7.1.2.4.

7.1.2.3 Liquid refrigerant feed testing, if elected, shall be processed next. After the equipment reaches stabilized conditions, the liquid feed recovery rate shall be measured. One method is to wait 2 minutes after starting liquid feed and then measure the liquid refrigerant recovery rate for a period of time sufficient to achieve the accuracy in 9.1. Continue liquid recovery operation as called for in 7.1.2.4.

7.1.2.4 Continue recovery operation until all liquid is removed from the mixing chamber and vapor is removed to the point where the equipment shuts down per automatic means or is manually stopped per the operating instructions.

7.1.2.5 After collecting the first contaminated refrigerant sample batch, the liquid and vapor value of the apparatus shall be closed and the mixing chamber pressure recorded after 1 minute as required in 9.5. After preparing a second contaminated refrigerant sample batch, continue recovery until the storage container reaches 80% liquid fill level. After recycling and measuring

the recycle rate per section 7.1.3, set this container aside for the vapor sample in 8.2.2.

7.1.2.6 Interruptions in equipment operations as called for in instruction manual are allowable.

7.1.3 Recycle as called for in equipment operating instructions. Determine recycle rate by appropriate means as required in 9.3.

7.1.4 Repeat steps 7.1.2, 7.1.2.4, and 7.1.3 with contaminated refrigerant sample until equipment indicator(s) show need to change filter(s). It will not be necessary to repeat the recycle rate determination in 7.1.3.

7.1.4.1 For equipment with a multiple pass recirculating filter system, analyze the contents of the previous storage container.

7.1.4.2 For equipment with a single pass filter system, analyze the contents of the current storage container.

7.1.5 Refrigerant loss due to the equipment's non-condensable gas purge shall be determined by appropriate means. (See Section 9.4.)

7.2 System Dependent Equipment. This procedure shall be used for vacuum rating of all system dependent equipment. Liquid refrigerant recovery rate, vapor refrigerant recovery rate, and recycle rate are not tested on system dependent systems.

7.2.1 The apparatus operation and testing shall be conducted at 75 F ±2 F. [23.9 °C. ±/1.1. °C.].

7.2.2 The apparatus shall be charged with refrigerant per its system design specifications.

7.2.3 For measurement of final recovery vacuum as required in 9.5, first shut the balance line isolation valve and wait 1 minute for pressure to balance. Then connect and operate the recovery system per manufacturers recommendations. When the evacuation is completed, open the balance line isolation valve and measure the pressure in the balance line.

*Section 8. Sampling and Chemical Analysis Methods*

8.1 The referee test methods for the various contaminants are summarized in the following paragraphs. Detailed test procedures are included in Appendix A ''Test Procedures for ARI STD 700.'' If alternate test methods are employed, the user must be able to demonstrate that they produce results equivalent to the specified referee method.

8.2 *Refrigerant Sampling.*

8.2.1 *Sampling Precautions.* Special precautions should be taken to assure that representative samples are obtained for analysis. Sampling shall be done by trained laboratory personnel following accepted sampling and safety procedures.

8.2.2 *Gas Phase Sample.* A gas phase sample shall be obtained for determining the non-condensables. Since non-condensable gases, if present, will concentrate in the vapor phase of the refrigerant, care must be exercised to eliminate introduction of air during the sample transfer. Purging is not and acceptable procedure for a gas phase sample since it may introduce a foreign product. Since R11, R113 and R123 have normal boiling points at or above room temperature, non-condensable determination is not required for these refrigerants.

8.2.2.1 The sample cylinder shall be connected to an evacuated gas sampling bulb by means of a manifold. The manifold should have a valve arrangement that facilitates evacuation of all connecting tubing leading to the sampling bulb.

8.2.2.2 After the manifold has been evacuated, close the valve to the pump and open the valve on the system. Allow the pressure to equilibrate and close valves.

8.2.3 *Liquid Phase Sample.* A liquid phase sample is required for all tests listed in this standard, except the test for non-condensables.

8.2.3.1 Place an empty sample cylinder with the valve open in an oven at 230 F [110 °C] for one hour. Remove it from the oven while hot, immediately connect to an evacuation system and evacuate to less than 1mm. mercury (1000 microns). Close the valve and allow it to cool.

8.2.3.2 The valve and lines from the unit to be sampled shall be clean and dry. Connect the line to the sample cylinder loosely. Purge through the loose connection. Make the connection tight at the end of the purge period. Take the sample as a liquid by chilling the sample cylinder slightly. Accurate analysis requires that the sample container be filled to at least 60% by volume; however under no circumstances should the cylinder be filled to more than 80% by volume. This can be accomplished by weighing the empty cylinder and then the cylinder with refrigerant. When the desired amount of refrigerant has been collected, close the valve(s) and disconnect the sample cylinder immediately.

8.2.3.3 Check the sample cylinder for leaks and record the gross weight.

8.3 *Water Content.*

8.3.1. The Coulometric Karl Fischer Titration shall be the primary test method for determining the water content of refrigerants. This method is described in Appendix A. This method can be used for refrigerants that are either a liquid or a gas at room temperature, including Refrigerants 11 and 13. For all refrigerants, the sample for water analysis shall be taken from the liquid phase of the container to be tested. Proper operation of the analytical method requires special equipment and an experienced operator. The precision of the results is excellent if proper sampling and handling procedures are followed. Refrigerants containing a colored dye can be successfully analyzed for water using this method.

8.3.2 The Karl Fischer Test Method is an acceptable alternative test method for determining the water content of refrigerants. This method is described in ASTM Standard for ''Water in gases Using Karl Fisher Reagent'' E700–79, reapproved 1984 (American Society for Testing and Materials, Philadelphia, PA).

8.3.3 Report the moisture level in parts per million by weight if a sample is required.

8.4 *Chloride*. The refrigerant shall be tested for chlorides as an indication of the presence of hydrochloric or similar acids. The recommended procedure is intended for use with new or reclaimed refrigerants. Significant amounts of oil may interfere with the results by indicating a failure in the absence of chlorides.

8.4.1 The test method shall be that described in Appendix A ''Test Procedures for ARI–700.'' The test will show noticeable turbidity at equivalent chloride levels of about 3 ppm by weight or higher.

8.4.2 The results of the test shall not exhibit any sign of turbity. Report results as ''pass'' or ''fail.''

8.5 *Acidity*.

8.5.1 The acidity test uses the titration principle to detect any compound that is highly soluble in water and ionizes as an acid. The test method shall be that described in Appendix A. ''Test Procedures for ARI–700.'' The test may not be suitable for determination of high molecular weight organic acids; however these acids will be found in the high boiling residue test outlined in Section 5.7. The test requires about a 100 to 120 gram sample and has a low detection limit of 0.1 ppm by weight as HC1.

8.6 High Boiling Residue.

8.6.1 High boiling residue will be determined by measuring the residue of a standard volume of refrigerant after evaporation. The refrigerant sample shall be evaporated at room temperature or a temperature 50 F [10°.0C], above the boiling point of the sample using a Goetz tube as specified in Appendix A ''Test Procedures for ARI–700.'' Oils and or organic acids will be captured by this method.

8.6.2 The value for high boiling residue shall be expressed as a percentage by volume.

8.7 Particulates/Solids.

8.7.1 A measured amount of sample is evaporated from a Goetz bulb under controlled temperature conditions. The particulates/solids shall be determined by visual examination of the empty Goetz bulb after the sample has evaporated completely. Presence of dirt, rust or other particulate contamination is reported a ''fail.'' For details of this test method, refer to Appendix B ''Test Procedures for ARI–700.''

8.8 Non-Condensables

8.8.1 A vapor phase sample shall be used for determination of non-condensables. Non-condensable gases consist primarily of air accumulated in the vapor phase of refrigerant containing tanks. The solubility of air in the refrigerants liquid phase is extremely low and air is not significant as a liquid phase contaminant. The presence of non-condensable gases may reflect poor quality control in transferring refrigerants to storage tanks and cylinders.

8.8.2 The test method shall be gas chromatography with a thermal conductivity detector as described in Appendix A ''Test Procedures for ARI–700.''

8.8.2.1 The Federal Specification for ''Fluorocarbon Refrigerants,'' BB–F–1421B, dated March 5, 1992, section 4.4.2 (perchloroethylene method) is an acceptable alternate test method.

8.8.3 Report the level of non-condensable as percent by volume.

*Section 9. Performance Calculation and Rating*

9.1 The liquid refrigerant recovery rate shall be expressed in pounds per minute [kg/min] and measured by weight change at the mixing chamber (See Figure 1) divided by elapsed time to an accuracy within .02 lbs/min. [.009 kg/min]. Ratings using the Push/Pull method shall be identified ''Push/Pull''. Equipment may be rated by both methods.

9.2 The vapor refrigerant recovery rate shall be expressed in pounds per minute [kg/min] and measured by weight change at the mixing chamber (See Figure 1) divided by elapsed time to an accuracy within .02 lbs/min. [.0.009 kg/min].

9.3 The recycle rate is defined in 3.7 and expressed in pounds per minute [kg/min] of flow and shall be per ASHRAE 41.7–84 ''Procedure For Fluid Measurement Of Gases'' or ASHRAE 41.8–89 ''Standard Method of Flow of Fluids—Liquids.''

9.3.1 For equipment using multipass recycling or a separate sequence, the recycle rate shall be determined by dividing the net weight W of the refrigerant to be recycled by the actual time T required to recycle the refrigerant. Any set-up or operator interruptions shall not be included in the time T. The accuracy of the recycle rate shall be within .02 lbs/min. [.009 kg/min].

9.3.2 If no separate recycling sequence is used, the recycle rate shall be the higher of the vapor refrigerant recovery rate or the liquid refrigerant recovery rate. The recycle rate shall match a process which leads to contaminant levels in 9.6. Specifically, a recovery rate determined from bypassing a contaminant removal device cannot be used as a recycle rate when the contaminant levels in 9.6 are determined by passing the refrigerant through the containment removal device.

9.4 Refrigerant loss due to non-condensable purging shall be less than 5%. This rating shall be expressed as ''passed'' if less than 5%.

This calculation will be based upon net loss of non-condensables and refrigerant due to the purge divided by the initial net content. The net loss shall be determined by weighing before and after the purge, by collecting purged gases, or an equivalent method.

9.5 The final recovery vacuum shall be the mixing chamber pressure called for in 7.1.2.5 expressed in inches of mercury vacuum, [mm Hg or kP]. The accuracy of the measurement shall be within ±.1 inch [±2.5mm] of Hg and rounding down to the nearest whole number.

9.6 The contaminant levels remaining after testing shall be published as follows:

Moisture content, PPM by weight
Chloride ions, Pass/Fail
Acidity, PPM by weight
High boiling residue, percentage by volume
Particulate/solid, Pass/Fail
Non-condensables, % by volume

9.7 Product Literature: Except as provided under product labelling in Section 11. performance ratings per 9.1, 9.2, 9.3, and 9.5 must be grouped together and shown for all listed refrigerants (11.2) subject to limitations of 9.8. Wherever any contaminant levels per 9.6 are rated, all ratings in 9.6 must be shown for all listed refrigerants subject to limitations of 9.8. The type of equipment in 11.1 must be included with either grouping. Optional ratings in 9.8 need not be shown.

9.8 Ratings shall include all of the parameters for each designed refrigerant in 11.2 as shown in Tables 2 and 3.

TABLE 2—PERFORMANCE

| Parameter/type of equipment | Recovery | Recovery/recycle | Recycle | System dependent equipment |
|---|---|---|---|---|
| Liquid refrigerant recovery rate | (2) | (2) | N/A | N/A |
| Vapor refrigerant recovery rate | (2) | (2) | N/A | N/A |
| Final recovery vacuum | (1) | (1) | N/A | (1) |
| Recycle rate | N/A | (1) | (1) | N/A |
| Refrigerant loss due to non-condensable purging | (3) | (1) | (1) | N/A |

[1] Mandatory rating.
[2] For a recovery or recovery/recycle unit, one must rate for either liquid feed only or vapor feed only or can rate for both. If rating only the one, the other shall be indicated by "N/A."
[3] For Recovery Equipment, these parameters are optional. If not rated, use N/A.

TABLE 3—CONTAMINANTS

| Contaminant/type of equipment | Recovery | Recovery/recycle | Recycle | System dependent equipment |
|---|---|---|---|---|
| Moisture content | (*) | x | x | NA. |
| Chloride ions | (*) | x | x | NA. |
| Acidity | (*) | x | x | NA. |
| High boiling residue | (*) | x | x | NA. |
| Particulates | (*) | x | x | NA. |
| Non-condensables | (*) | x | x | NA. |

* For Recovery Equipment, these parameters are optional. If not rated, use N/A.
x Mandatory rating.

*Section 10. Tolerances*

10.1 Any equipment tested shall produce contaminant levels not higher than the published ratings. The liquid refrigerant recovery rate, vapor refrigerant recovery rate, final recovery vacuum and recycle rate shall not be less than the published ratings.

*Section 11. Product Labelling*

11.1 *Type of equipment*. The type of equipment shall be as listed:

11.1.1 Recovery only
11.1.2 System Dependent Recovery
11.1.3 Recovery/Recycle
11.1.4 Recycle only

11.2 Designated refrigerants and the following as applicable for each:

11.2.1 Liquid Recovery Rate
11.2.2 Vapor Recovery Rate
11.2.3 Final Recovery Vacuum
11.2.4 Recycle Rate

11.3 The nameplate shall also conform to the labeling requirements established for certified recycling and recovery equipment established at 40 CFR 82.158(h).

ATTACHMENT TO APPENDIX B1

Particulate Used in Standard Contaminated Refrigerant Sample.

*1. Particulate Specification*

1.1 The particulate material pm will be a blend of 50% coarse air cleaner dust as received, and 50% retained on a 200-mesh screen. The coarse air cleaner dust is available from: AC Spark Plug Division, General Motors Corporation, Flint, Michigan.

*1.2 Preparation of Particulate Materials*

To prepare the blend of contaminant, first wet screen a quantity of coarse air cleaner dust on a 200-mesh screen (particle retention 74 pm). This is done by placing a portion of the dust on a 200-mesh screen and running water through the screen while stirring the dust with the fingers. The fine contaminant particles passing through the screen are discarded. The +200 mesh particles collected on the screen are removed and dried for one hour at 230 F [110 °C]. The blend of standard contaminant is prepared by mixing 50% by weight of coarse air cleaner dust as received after drying for one hour at 230 F [110 °C] with 50% by weight of the +200 mesh screened dust.

1.3 The coarse air cleaner dust as received and the blend used as the standard contaminant have the following approximate particle size analysis: Wt. % in various size ranges, pm.

| Size range | As received | Blend |
|---|---|---|
| 0–5 | 12 | 6 |
| 5–10 | 12 | 6 |
| 10–20 | 14 | 7 |
| 20–40 | 23 | 11 |
| 40–80 | 30 | 32 |
| 80–200 | 9 | 38 |

[58 FR 28712, May 14, 1993, as amended at 59 FR 42960, Aug. 19, 1994. Redesignated and amended at 68 FR 43815, July 24, 2003]

## APPENDIX B2 TO SUBPART F OF PART 82—PERFORMANCE OF REFRIGERANT RECOVERY, RECYCLING, AND/OR RECLAIM EQUIPMENT

This appendix is based on the Air-Conditioning and Refrigeration Institute Standard 740–1995.

*Section 1. Purpose*

1.1 *Purpose*. The purpose of this standard is to establish methods of testing for rating and evaluating the performance of refrigerant recovery, and/or recycling equipment and general equipment requirements (herein referred to as ''equipment'') for contaminant or purity levels, capacity, speed and purge loss to minimize emission into the atmosphere of designated refrigerants.

*Section 2. Scope*

2.1 *Scope*. This standard applies to equipment for recovering and/or recycling single refrigerants, azeotropics, zeotropic blends, and their normal contaminants from refrigerant systems. This standard defines the test apparatus, test gas mixtures, sampling procedures and analytical techniques that will be used to determine the performance of refrigerant recovery and/or recycling equipment (hereinafter, ''equipment'').

*Section 3. Definitions*

3.1 *Definitions*. All terms in this appendix will follow the definitions in §82.152 unless otherwise defined in this appendix.

3.2 *Clearing Refrigerant*. Procedures used to remove trapped refrigerant from equipment before switching from one refrigerant to another.

3.3 *High Temperature Vapor Recovery Rate*. For equipment having at least one designated refrigerant (see 11.2) with a boiling point in the range of −50 to +10 °C, the rate will be measured for R–22, or the lowest boiling point refrigerant if R–22 is not a designated refrigerant.

3.4 *Published Ratings*. A statement of the assigned values of those performance characteristics, under stated rating conditions, by which a unit may be chosen to fit its application. These values apply to all units of like nominal size and type (identification) produced by the same manufacturer. As used herein, the term ''published rating'' includes the rating of all performance characteristics shown on the unit or published in specifications, advertising or other literature controlled by the manufacturer, at stated rating conditions.

3.5 *Push/Pull Method*. The push/pull refrigerant recovery method is defined as the process of transferring liquid refrigerant from a refrigeration system to a receiving vessel by lowering the pressure in the vessel and raising the pressure in the system, and by connecting a separate line between the system liquid port and the receiving vessel.

3.6 *Recycle Flow Rate*. The amount of refrigerant processed divided by the time elapsed in the recycling mode. For equipment which uses a separate recycling sequence, the recycle rate does not include the recovery rate (or elapsed time). For equipment which does not use a separate recycling sequence, the recycle rate is a rate based solely on the higher of the liquid or vapor recovery rate, by which the contaminant levels were measured.

3.7 *Residual Trapped Refrigerant*. Refrigerant remaining in equipment after clearing.

3.8 *Shall*, *Should*, *Recommended* or *It Is Recommended* shall be interpreted as follows:

3.8.1 *Shall*. Where ''shall'' or ''shall not'' is used for a provision specified, that provision

is mandatory if compliance with this appendix is claimed.

3.8.2 *Should, Recommended* or *It Is Recommended* is used to indicate provisions which are not mandatory but which are desirable as good practice.

3.9 Standard Contaminated Refrigerant Sample. A mixture of new or reclaimed refrigerant and specified quantities of identified contaminants which constitute the mixture to be processed by the equipment under test. These contaminant levels are expected only from severe service conditions.

3.10 *Trapped Refrigerant*. The amount of refrigerant remaining in the equipment after the recovery or recovery/recycling operation but before clearing.

3.11 *Vapor Recovery Rate*. The average rate that refrigerant is withdrawn from the mixing chamber between two pressures as vapor recovery rate is changing pressure and temperature starting at saturated conditions either 24 °C or at the boiling point 100 kPa (abs), whichever is higher. The final pressure condition is 10% of the initial pressure, but not lower than the equipment final recovery vacuum and not higher than 100 kPa (abs).

*Section 4. General Equipment Requirements*

4.1 *Equipment Information*. The equipment manufacturer shall provide operating instructions, necessary maintenance procedures and source information for replacement parts and repair.

4.2 *Filter Replacement*. The equipment shall indicate when any filter/drier(s) needs replacement. This requirement can be met by use of a moisture transducer and indicator light, by use of a sight glass/moisture indicator or by some measurement of the amount of refrigerant processed such as a flow meter or hour meter. Written instructions such as ''to change the filter every 181 kg, or every 30 days'' shall not be acceptable except for equipment in large systems where the liquid recovery rate is greater than 11.3 kg/min where the filter/drier(s) would be changed for every job.

4.3 *Purge of Non-Condensable*. If non-condensables are purged, the equipment shall either automatically purge non-condensables or provide indicating means to guide the purge process.

4.4 *Purge Loss*. The total refrigerant loss due to purging non-condensables, draining oil and clearing refrigerant (*see* 9.5) shall be less than 3% (by weight) of total processed refrigerant.

4.5 *Permeation Rate*. High pressure hose assemblies ⅝ in. [16 mm] nominal and smaller shall not exceed a permeation rate of 3.9 g/cm$^2$/yr (internal surface) at a temperature of 48.8 °C. Hose assemblies that UL recognized as having passed ANSI/UL 1963 requirements shall be accepted without testing. See 7.1.4.

4.6 *Clearing Trapped Refrigerant*. For equipment rated for more than one refrigerant, the manufacturer shall provide a method and instructions which will accomplish connections and clearing within 15 minutes. Special equipment, other than a vacuum pump or manifold gauge set shall be furnished. The clearing procedure shall not rely upon the storage cylinder below saturated pressure conditions at ambient temperature.

4.7 *Temperature*. The equipment shall be evaluated at 24 °C with additional limited evaluation at 40 °C. Normal operating conditions range from 10 °C to 40 °C.

4.8 *Exemptions*. Equipment intended for recovery only shall be exempt from 4.2 and 4.3.

*Section 5. Contaminated Refrigerants*

5.1 *Sample Characteristics*. The standard contaminated refrigerant sample shall have the characteristics specified in Table 1, except as provided in 5.2.

5.2 *Recovery-Only Testing*. Recovery equipment not rated for any specific contaminant shall be tested with new or reclaimed refrigerant.

*Section 6. Test Apparatus*

6.1 *General Recommendations*. The recommended test apparatus is described in the following paragraphs. If alternate test apparatus are employed, the user shall be able to demonstrate that they produce results equivalent to the specified referee apparatus.

6.2 *Self-Contained Equipment Test Apparatus*. The apparatus, shown in Figure 1, shall consist of:

6.2.1 *Mixing Chamber*. A mixing chamber consisting of a tank with a conical-shaped bottom, a bottom port and piping for delivering refrigerant to the equipment, various ports and valves for adding refrigerant to the chamber and stirring means for mixing.

6.2.2 *Filling Storage Cylinder*. The storage cylinder to be filled by the refrigerant transferred shall be cleaned and at the pressure of the recovered refrigerant at the beginning of the test. It will not be filled over 80%, by volume.

6.2.3 *Vapor Feed*. Vapor refrigerant feed consisting of evaporator, control valves and piping to create a 3.0 °C superheat condition at an evaporating temperature of 21 °C ±2K.

6.2.4 *Alternative Vapor Feed*. An alternative method for vapor feed shall be to pass the refrigerant through a boiler and then through an automatic pressure regulating valve set at different saturation pressures, moving from saturated pressure at 24 °C to final pressure of recovery.

6.2.5 *Liquid Feed*. Liquid refrigerant feed consisting of control valves, sampling port and piping.

6.2.6 *Instrumentation*. Instrumentation capable of measuring weight, temperature, pressure and refrigerant loss, as required.

TABLE 1—STANDARD CONTAMINATED REFRIGERANT SAMPLES

| | R11 | R12 | R13 | R22 | R113 | R114 | R123 | R134a | R500 | R502 | R503 |
|---|---|---|---|---|---|---|---|---|---|---|---|
| Moisture Content: ppm by Weight of Pure refrigerant | 100 | 80 | 30 | 200 | 100 | 85 | 200 | 200 | 200 | 200 | 30 |
| Particulate Content: ppm by Weight of Pure Refrigerant Characterized by [1] | 80 | 80 | NA | 80 | 80 | 80 | 80 | 80 | 80 | 80 | NA |
| Acid Content: ppm by Weight of Pure Refrigerant—(mg KOH per kg Refrigerant) Characterized by [2] | 500 | 100 | NA | 500 | 400 | 200 | 500 | 100 | 100 | 100 | NA |
| Mineral Oil Content: | | | | | | | | | | | |
| % by Weight of Pure Refrigerant | 20 | 5 | NA | 5 | 20 | 20 | 20 | 5 | 5 | 5 | NA |
| Viscosity (SUS) | 300 | 150 | ..... | 300 | 300 | 300 | 300 | 150 [3] | 150 | 150 | |
| Non-Condensable Gases (Air Content): % by Volume | NA | 3 | 3 | 3 | NA | 3 | NA | 3 | 3 | 3 | 3 |

[1] Particulate content shall consist of inert materials and shall comply with particulate requirements in appendix B.
[2] Acid consists of 60% oleic acid and 40% hydrochloric acid on a total number basis.
[3] Synthetic ester-based oil.

Figure 1. Test Apparatus for Self-Contained Equipment

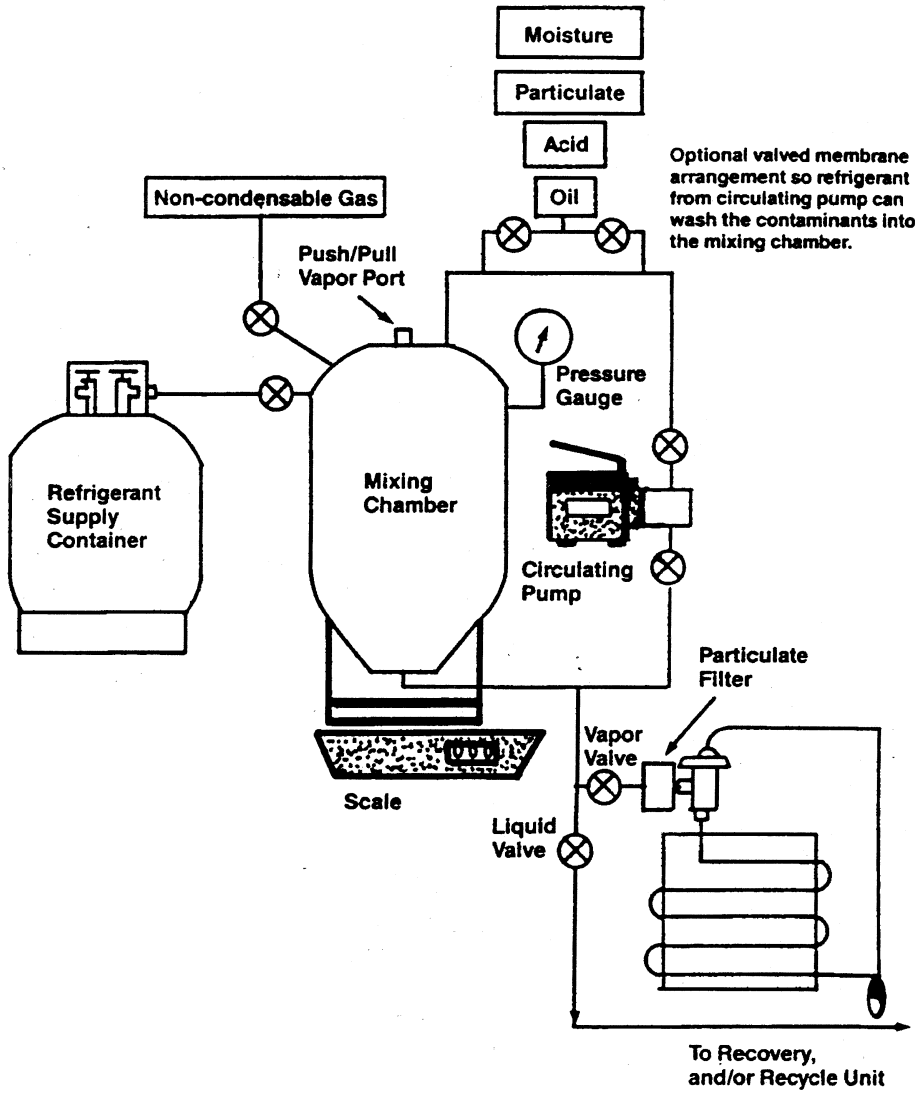


6.3 *Size.* The size of the mixing chamber shall be a minimum of .09 $m^3$. The bottom port and the refrigerant feed shall depend on the size of the equipment. Typically, the mixing valves and piping shall be 9.5 mm. For large equipment to be used on chillers, the minimum inside diameter of ports, valves and pipings shall be the smaller of the manufacturer's recommendation or 37 mm.

6.4 *System Dependent Equipment Test Apparatus.* This test apparatus is to be used for final recovery vacuum rating of all system dependent equipment.

6.4.1 *Test Setup*. The test apparatus shown in Figure 2 consists of a complete refrigeration system. The manufacturer shall identify the refrigerants to be tested. The test apparatus can be modified to facilitate operation or testing of the system dependent equipment if the modifications to the apparatus are specifically described within the manufacturer's literature. (*See* Figure 2.) A 6.3 mm balance line shall be connected across the test apparatus between the high and low-pressure sides, with an isolation valve located at the connection to the compressor high side. A 6.3 mm access port with a valve core shall be located in the balance line for the purpose of measuring final recovery vacuum at the conclusion of the test.

*Section 7. Performance Testing*

7.1 *General Testing*.

7.1.1 *Temperatures*. Testing shall be conducted at an ambient temperature of 24 °C ±1K except high temperature vapor recovery shall be at 40 °C ±1K. The evaporator conditions of 6.2.3 shall be maintained as long as liquid refrigerant remains in the mixing chamber.

7.1.2 *Refrigerants*. The equipment shall be tested for all designated refrigerants (*see* 11.2). All tests in Section 7 shall be completed for each refrigerant before starting tests with the next refrigerant.

7.1.3 *Selected Tests*. Tests shall be as appropriate for the equipment type and ratings parameters selected (*see* 9.9, 11.1 and 11.2).

7.1.4 *Hose Assemblies*. For the purpose of limiting refrigerant emissions to the atmosphere, hose assemblies shall be tested for permeation according to ANSI/UL Standard 1963, Section 40.10.

7.2 *Equipment Preparation and Operation*. The equipment shall be prepared and operated per the operating instructions.

7.3 *Test Batch*. The test batch consisting of refrigerant sample (*see* Section 5) of the test refrigerant shall be prepared and thoroughly mixed. Continued mixing or stirring shall be required during the test while liquid refrigerant remains in the mixing chamber. The mixing chamber shall be filled to 80% level by volume.

7.3.1 *Control Test Batch*. Prior to starting the test for the first batch for each refrigerant, a liquid sample will be drawn from the mixing chamber and analyzed per Section 8 to assure that contaminant levels match Table 1 within ±10 ppm for moisture, ±20 ppm for particulate, ±20 ppm for oleic acid and ±0.5% for oil.

7.4 *Recovery Tests (Recovery and Recovery/Recycle Equipment)*.

7.4.1 *Determining Recovery Rates*. The liquid and vapor refrigerant recovery rates shall be measured during the first test batch for each refrigerant (*see* 9.1, 9.2 and 9.4). Equipment preparation and recovery cylinder changeover shall not be included in elapsed time measurements for determining vapor recovery rate and liquid refrigerant recovery rate. Operations such as subcooling the recovery cylinder shall be included. Recovery cylinder shall be the same size as normally furnished or specified in the instructions by the equipment manufacturer. Oversized tanks shall not be permitted.

7.4.1.1 *Liquid Refrigerant Recovery Rate*. If elected, the recovery rate using the liquid refrigerant feed means (*see* 6.2.5) shall be determined. After the equipment reaches stabilized conditions of condensing temperature and/or recovery cylinder pressure, the recovery process shall be stopped and an initial weight shall be taken of the mixing chamber (*see* 9.2). The recovery process shall be continued for a period of time sufficient to achieve the accuracy in 9.4. The recovery process shall be stopped and a final weight shall be taken of the mixing chamber.

**Configuration of standard air conditioning or refrigeration system for use as a test apparatus**

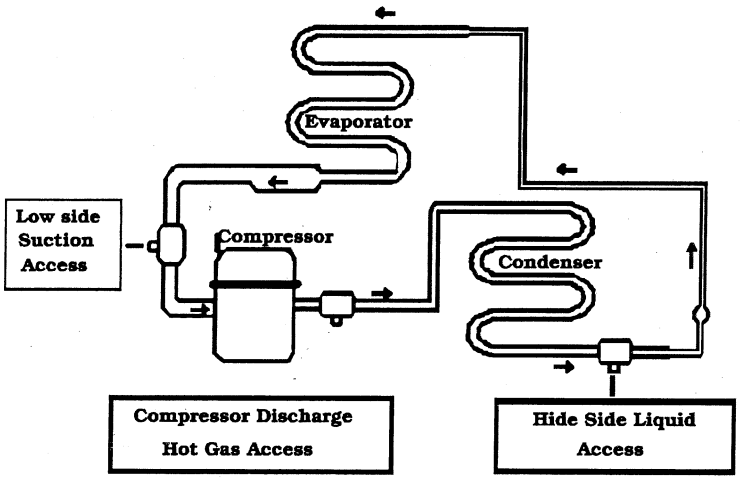


**Figure 2. System Dependent Equipment Test Apparatus**

7.4.1.2 *Vapor Refrigerant Recovery Rate.* If elected, the average vapor flow rate shall be measured to accuracy requirements in clause 9.4 under conditions with no liquid refrigerant in the mixing chamber. The liquid recovery feed means shall be used. At initial conditions of saturated vapor at the higher of 24 °C or the boiling temperature (100 kPa absolute pressure), the weight of the mixing chamber and the pressure shall be recorded. At final conditions representing pressure in the mixing chamber of 10% of the initial condition, but not less than the final recovery vacuum (*see* 9.6) nor more than 100 kPa, measure the weight of the mixing chamber and the elapsed time.

7.4.1.3 *High Temperature Vapor Recovery Rate.* Applicable for equipment having at least one designated refrigerant (*see* 11.2) with a boiling point between −50 °C and +10 °C. Measure the rate for R–22, or the refrigerant with the lowest boiling point if R–22 is not a designated refrigerant. Repeat the test in 7.4.1.2 at saturated conditions at 40 °C and continue to operate equipment to assure it will achieve the final recovery vacuum (*see* 7.4.3).

7.4.2 *Recovery Operation.* This test is for determining the final recovery vacuum and the ability to remove contaminants as appropriate. If equipment is rated for liquid recovery (*see* 7.4.1.3), liquid recovery feed means described in 6.2.5 shall be used. If not, vapor recovery means described in 6.2.3 or 6.2.4 shall be used. Continue recovery operation until all liquid is removed from the test apparatus and vapor is removed to the point where equipment shuts down by automatic means or is manually shut off per operating instructions.

7.4.2.1 *Oil Draining.* Capture oil from the equipment at intervals as required in the instructions. Record the weight of the container. Completely remove refrigerant from oil by evacuation or other appropriate means. The weight difference shall be used in 9.5.2.

7.4.3 *Final Recovery Vacuum.* At the end of the first test batch for each refrigerant, the liquid valve and vapor valve of the apparatus shall be closed. After waiting 1 minute, the mixing chamber pressure shall be recorded (*see* 9.6).

7.4.4 *Residual Refrigerant.* This test will measure the mass of remaining refrigerant in the equipment after clearing and therefore the potential for mixing refrigerants (*see* 4.6).

7.4.4.1 *Initial Conditions*. At the end of the last test for each batch for each refrigerant, the equipment shall be disconnected from the test apparatus (Figure 1). Recycle per 7.5, if appropriate. Perform refrigerant clearing operations as called for in the instruction manual. Capture and record the weight of any refrigerant which would have been emitted to the atmosphere during the clearing process for use in 9.5. If two loops are used for recycling, trapped refrigerant shall be measured for both.

7.4.4.2 *Residual Trapped Refrigerant*. Evacuate an empty test cylinder to 1.0 kPa absolute. Record the empty weight of the test cylinder. Open all valves to the equipment so as to provide access to all trapped refrigerant. Connect the equipment to the test cylinder and operate valves to recover the residual refrigerant. Record the weight of the test cylinder using a recovery cylinder pressure no less than specified in 6.2.2. Place the test cylinder in liquid nitrogen for a period of 30 minutes or until a vacuum of 1000 microns is reached, whichever occurs first.

7.5 *Recycling Tests (Recovery/Recycle Equipment)*.

7.5.1 *Recycling Operation*. As each recovery cylinder is filled in 7.4.2, recycle according to operating instructions. There will not necessarily be a separate recycling sequence. Note non-condensable purge measurement in 9.5.

7.5.1.1 *Recycle Flow Rate*. While recycling the first recovery cylinder for each refrigerant, determine the recycling flow rate by appropriate means (*see* 9.3) to achieve the accuracy required in 9.4.

7.5.2 *Non-Condensable Sample*. After completing 7.4.3, prepare a second test batch (7.3). Recover per 7.4.2 until the current recovery cylinder is filled to 80% level by volume. Recycle per 7.5.1. Mark this cylinder and set aside for taking the vapor sample. For equipment having both an internal tank of at least 3 kg refrigerant capacity and an external recovery cylinder, two recovery cylinders shall be marked and set aside. The first is the cylinder described above. The second cylinder is the final recovery cylinder after filling it to 80% level by volume and recycling.

7.5.3 *Liquid Sample for Analysis*. Repeat steps 7.3, 7.4.2 and 7.5.1 with further test batches until indication means in 4.2 show the filter/drier(s) need replacing.

7.5.3.1 *Multiple Pass*. For equipment with a separate recycling circuit (multiple pass), set aside the current cylinder and draw the liquid sample (*see* 7.4) from the previous cylinder.

7.5.3.2 *Single Pass*. For equipment with the single pass recycling circuit, draw the liquid sample (*see* 7.4) from the current cylinder.

7.6 *Measuring Refrigerant Loss*. Refrigerant loss due to non-condensables shall be determined by appropriate means (*see* 9.5.1). The loss could occur in 7.4.1, 7.4.2 and 7.5.1.

*Section 8. Sampling and Chemical Analysis Methods*

8.1 *Chemical Analysis*. Chemical analysis methods shall be specified in appropriate standards such as ARI 700–95 and Appendix C to ARI Standard 700–95.

8.2 *Refrigerant Sampling*.

8.2.1 *Water Content*. The water content in refrigerant shall be measured by the Karl Fischer Analytical Method or by the Karl Fischer Coulometric techniques. Report the moisture level in parts per million by weight.

8.2.2 *Chloride Ions*. Chloride ions shall be measured by turbidity tests. At this time, quantitative results have not been defined. Report chloride content as ''pass'' or ''fail.'' In the future, when quantitative results are possible, report chloride content as parts per million by weight.

8.2.3 *Acidity*. The acidity test uses the titration principle. Report the acidity in parts per million by weight (mg KOH/kg) of sample.

8.2.4 *High Boiling Residue*. High boiling residues shall use measurement of the volume of residue after evaporating a standard volume of refrigerant. Using weight measurement and converting to volumetric units is acceptable. Report high boiling residues as percent by volume.

8.2.5 *Particulates/Solids*. The particulates/solids measurement employs visual examination. Report results as ''pass'' or ''fail.''

8.2.6 *Non-condensables*. The level of contamination by non-condensable gases in the base refrigerant being recycled shall be determined by gas chromatography. Report results as percent by volume.

*Section 9. Performance Calculation and Rating*

9.1 *Vapor Refrigerant Recovery Rate*. This rate shall be measured by weight change of the mixing chamber divided by elapsed time (*see* 7.4.1.2). The units shall be kg/min and the accuracy shall be per 9.4.

9.1.1 *High Temperature Vapor Recovery Rate*.

9.2 *Liquid Refrigerant Recovery Rate*. This rate shall be measured by weight change of the mixing chamber divided by elapsed time (*see* 7.4.1.3). The units shall be kg/min and the accuracy shall be per 9.4.

9.3 *Recycle Flow Rate*. The recycle flow rate shall be as defined in 3.10, expressed in kg/min, and the accuracy shall be per 9.4.

9.3.1 For equipment using multi-pass recycling or a separate sequence, the recycle rate shall be determined by dividing the net weight W of the refrigerant to be recycled by the actual time T required to recycle. Any set-up or operator interruptions shall not be included in the time T.

9.3.2 If no separate recycling sequence is used, the recycle rate shall be the higher of the vapor refrigerant recovery rate or the liquid refrigerant recovery rate. The recycle rate shall match a process which leads to contaminant levels in 9.9. Specifically, a recovery rate determined from bypassing a contaminant removal device cannot be used as a recycle rate when the contaminant levels in 9.9 are determined by passing the refrigerant through the contaminant removal device.

9.4 *Accuracy of Flow Rates*. The accuracy of test measurements in 9.1, 9.2 and 9.3 shall be ±008 kg/min or flow rates up to .42 kg/min and ±2.0% for flow rates larger than .42 kg/min. Ratings shall be expressed to the nearest .02 kg/min.

9.5 *Refrigerant Loss*. This calculation will be based upon the net loss of refrigerant which would have been eliminated in the non-condensable purge process (*see* 7.5.1), the oil draining process (*see* 7.4.2.1) and the refrigerant clearing process (*see* 7.4.4.1), all divided by the net refrigerant content of the test batches. The refrigerant loss shall not exceed 3% by weight.

9.5.1 *Non-Condensable Purge*. Evacuate an empty container to 2 kPa absolute. Record the empty weight of the container. Place the container in a dry ice bath. Connect the equipment purge connection to the container and operate purge according to operating instructions so as to capture the non-condensables and lost refrigerant. Weigh the cylinder after the recycling is complete. Equivalent means are permissible.

9.5.2 *Oil Draining*. Refrigerant removed from the oil after draining shall be collected and measured in accordance with 7.4.2.1.

9.5.3 *Clearing Unit*. Refrigerant captured during the clearing process shall be measured in accordance with 7.4.4.1.

9.6 *Final Recovery Vacuum*. The final recovery vacuum shall be the mixing chamber pressure in 7.4.3 expressed in kPa. The accuracy of the measurement shall be within 0.33 kPa.

9.7 *Residual Trapped Refrigerant*. The amount of residual trapped refrigerant shall be the final weight minus the initial weight of the test cylinder in 7.4.4.2, expressed in kg. The accuracy shall be ±0.02 kg and reported to the nearest 0.05 kg.

9.8 *Quantity Recycled*. The amount of refrigerant processed before changing filters (*see* 7.5.3) shall be expressed in kg to an accuracy of ±1%.

9.9 *Contaminant Levels*. The contaminant levels remaining after testing shall be published as follows:

Moisture content, ppm by weight
Chloride ions, pass/fail
Acidity, ppm by weight
High boiling residue, % (by volume)
Particulates-solid, pass/fail (visual examination)
Non-condensables, % (by volume)

9.10 *Minimum Data Requirements for Published Ratings*. Published ratings shall include all of the parameters as shown in Tables 2 and 3 for each refrigerant designated by the manufacturer.

*Section 10. Tolerances*

10.1 *Tolerances*. Performance related parameters shall not be less favorable than the published ratings.

*Section 11. Marking and Nameplate Data*

11.1 *Marking and Nameplate Data*. The nameplate shall display the manufacturer's name, model designation, type of equipment, designated refrigerants, capacities and electrical characteristics where applicable. The nameplate shall also conform to the labeling requirements established for certified recycling and recovery equipment established at 40 CFR 82.158(h).

Recommended nameplate voltages for 60 Hertz systems shall include one or more of the utilization voltages shown in Table 1 of ARI Standard 110–90. Recommended nameplate voltages for 50 Hertz systems shall include one or more of the utilization voltages shown in Table 1 of IEC Standard Publication 38, IEC Standard Voltages.

11.2 *Data for Designated Refrigerants*. For each refrigerant designated, the manufacturer shall include all the following that are applicable per Table 2:

a. Liquid Recovery Rate
b. Vapor Recovery Rate
c. High Temperature Vapor Recovery Rate
d. Final Recovery Vacuum
e. Recycle Flow Rate
f. Residual Trapped Refrigerant
g. Quantity Recycled

TABLE 2—PERFORMANCE

| Parameter/Type of equipment | Recovery | Recovery/Recycle | Recycle | System dependent equipment |
|---|---|---|---|---|
| Liquid Refrigerant Recovery Rate | (1) | (1) | N/A | N/A |
| Vapor Refrigerant Recovery Rate | (1) | (1) | N/A | N/A |
| High Temp. Vapor Recovery Rate | (1) | (1) | N/A | N/A |
| Final Recovery Vacuum | (X) | (X) | N/A | (X) |
| Recycle Flow Rate | N/A | (X) | (X) | N/A |
| Refrigerant Loss | (3) | (X) | (X) | (3) |

TABLE 2—PERFORMANCE—Continued

| Parameter/Type of equipment | Recovery | Recovery/ Recycle | Recycle | System dependent equipment |
|---|---|---|---|---|
| Residual Trapped Refrigerant | (2) | (2) | (2) | (2) |
| Quantity Recycled | N/A | (X) | (X) | N/A |

X Mandatory rating.
1 For a recovery or recovery/recycle unit, one must rate either liquid refrigerant recovery rate or vapor refrigerant recovery rate or one can rate for both. If rating only the one, the other shall be indicated by N/A, "not applicable."
2 Mandatory rating for equipment tested for multiple refrigerants.
3 Mandatory rating if multiple refrigerants, oil separation or non-condensable purge are rated.
NOTE: For recovery equipment, these parameters are optional. If not rated use N/A, "not applicable."

TABLE 3—CONTAMINANTS

| Contaminant/Type of equipment | Recovery | Recovery/ Recycle | Recycle | System dependent equipment |
|---|---|---|---|---|
| Moisture Content | (*) | (X) | (X) | N/A |
| Chloride Ions | (*) | (X) | (X) | N/A |
| Acidity | (*) | (X) | (X) | N/A |
| High Boiling Residue | (*) | (X) | (X) | N/A |
| Particulates | (*) | (X) | (X) | N/A |
| Non-Condensables | (*) | (X) | (X) | N/A |

* For recovery equipment, these parameters are optional. If not rated, use N/A, "not applicable."
X Mandatory rating.

## ATTACHMENT 1 TO APPENDIX B2 TO SUBPART F OF PART 82—REFERENCES

Listed here are all standards, handbooks, and other publications essential to the formation and implementation of the standard. All references in this appendix are considered as part of this standard.

- ANSI/UL Standard 1963, *Refrigerant Recovery/Recycling Equipment,* First Edition, 1989, American National Standards Institute/ Underwriters Laboratories, Inc.
- ARI Standard 110–90, *Air-Conditioning and Refrigerating Equipment Nameplate Voltages,* Air-Conditioning and Refrigeration Institute
- ARI Standard 700–95, *Specifications for Fluorocarbon and Other Refrigerants,* Air-Conditioning and Refrigeration Institute
- ASHRAE Terminology of Heating, Ventilation, Air Conditioning, Refrigeration, & Refrigeration, American Society of Heating, Refrigerating, and Air-Conditioning Engineers, Inc., 1991
- IEC Standard Publication 38, *IEC Standard Voltages,* International Electrotechnical Commission, 1983

## ATTACHMENT 2 TO APPENDIX B2 TO SUBPART F OF PART 82-PARTICULATE USED IN STANDARD CONTAMINATED REFRIGERANT SAMPLE

### *1. Particulate Specification*

B1.1 The particulate material (pm) will be a blend of 50% coarse air cleaner dust as received, and 50% retained on a 200-mesh screen. The coarse air cleaner dust is available from: AC Spark Plug Division; General Motors Corporation; Flint, Michigan.

B1.2 *Preparation of Particulate Materials.*

To prepare the blend of contaminant, first wet screen a quantity of coarse air cleaner dust on a 200-mesh screen (particle retention 74 pm). This is done by placing a portion of the dust on a 200-mesh screen and running water through the screen while stirring the dust with the fingers. The fine contaminant particles passing through the screen are discarded. The +200-mesh particles collected on the screen are removed and dried for one hour at 110 °C. The blend of standard contaminant is prepared by mixing 50% by weight of coarse air cleaner dust as received (after drying for one hour at 110 °C) with 50% by weight of the +200 mesh screened dust.

B1.3 *Particle Size Analysis.*

The coarse air cleaner dust as received and the blend used as the standard contaminant have the following approximate particle size analysis:

Wt. % in various size ranges, pm.

| Size range | As received | Blend |
|---|---|---|
| 0–5 | 12 | 6 |
| 5–10 | 12 | 6 |
| 10–20 | 14 | 7 |
| 20–40 | 23 | 11 |
| 40–80 | 30 | 32 |
| 80–200 | 9 | 38 |

[68 FR 43815, July 24, 2003; 68 FR 54678, Sept. 18, 2003]

## APPENDIX C TO SUBPART F OF PART 82—METHOD FOR TESTING RECOVERY DEVICES FOR USE WITH SMALL APPLIANCES

*Recovery Efficiency Test Procedure for Refrigerant Recovery Equipment Used on Small Appliances*

The following test procedure is utilized to evaluate the efficiency of equipment designed to recover ozone depleting refrigerants (or any substitute refrigerant subject to the recycling rules promulgated pursuant to section 608 of the Clean Air Act Amendments of 1990) from small appliances when service of those appliances requires entry into the sealed refrigeration system or when those appliances are destined for disposal. This procedure is designed to calculate on a weight or mass basis the percentage of a known charge of CFC-12 refrigerant removed and captured from a test stand refrigeration system. Captured refrigerant is that refrigerant delivered to a container suitable for shipment to a refrigerant reclaimer plus any refrigerant remaining in the recovery system in a manner that it will be transferred to a shipping container after additional recovery operations.

The test stand refrigeration system required for this procedure is constructed with standard equipment utilized in currently produced household refrigerator and freezer products. The procedure also accounts for compressor oils that might be added to or removed from the test stand compressor or any compressor used in the recovery system.

### I. TEST STAND

Test stands are constructed in accordance with the following standards.

1. Evaporator—5/16 in. outside dia. with 30 cu. in. volume.
2. Condenser—1/4 in. outside dia. with 20 cu. in volume.
3. Suction line capillary heat exchanger—appropriate for compressor used.
4. An 800–950 Btu/hr high side case (rotary) compressor; or (depending on the test senario);
5. An 800–9500 Btu/hr low side case (reciprocating) compressor.

A person seeking to have its recovery system certified shall specify the compressors by manufacturer and model that are to be used in test stands constructed for evaluation of its equipment, and the type and quantity of compressor to be used in those compressors. Only a compressor oil approved for use by the compressor's manufacturer may be specified, and the quantity of compressor oil specified shall be an appropriate quantity for the type of oil and compressor to be used. In order to reduce the cost of testing, the person seeking certification of its recovery system may supply an EPA approved third party testing laboratory with test stands meeting these standards for use in evaluating its recovery system.

### II. TEST CONDITIONS

Tests are to be conducted at 75 degrees F, plus or minus 2 degrees F (23.9 C ±1.1 C). Separate tests are conducted on both high side case compressor stands and low side case compressor stands. Separate tests are also conducted with the test stand compressor running during the recovery operation, and without the test stand compressor running during the recovery operation, to calculate the system's recovery efficiency under either condition.

These tests are to be performed using a representative model of all equipment used in the recovery system to deliver recovered refrigerant to a container suitable for shipment to a refrigerant reclaimer. The test stands are to be equipped with access valves permanently installed as specific by the recovery system's vendor to represent the valves used with that system in actual field operations.

A series of five (5) recovery operations are to be performed for each compressor scenario and a recovery efficiency is calculated based on the total quantity of refrigerant captured during all five (5) recoveries. Alternatively, at the request of the recovery system's vendor, a recovery efficiency is to be calculated for each recovery event. In this case, a statistically significant number of recovery operations are to be performed. Determination of what is a statistically significant number of recoveries is to be calculated as set out below. These individual recovery efficiencies are then averaged.

There are four (4) compressor scenarios to be tested. These are a high side case compressor in working condition; a high side case compressor in nonworking condition; a low side case compressor in working condition; and a low side case compressor in nonworking condition. Recovery efficiencies calculated for the two working compressor scenarios are to be averaged to report a working compressor performance. The two nonworking compressor efficiencies are also to be averaged to report a nonworking compressor performance.

If large scale equipment is required in the system to deliver recovered refrigerant to a refrigerant reclaimer (eg. carbon desorption equipment) and it is not possible to have that equipment evaluated under the procedure, the system's vendor shall obtain engineering data on the performance of that large scale equipment that will reasonably demonstrate the percentage refrigerant lost when processed by that equipment. That data will be supplied to any person required to evaluate the performance of those systems. The following procedure will also be modified as needed to determine the weight

of refrigerant recovered from a test stand and delivered to a container for shipment to the large process equipment for further processing. The percentage loss documented to occur during processing is then to be applied to the recovery efficiencies calculated in this modified procedure to determine the overall capture efficiency for the entire system.

The following are definitions of symbols used in the test procedure.

Test Stand:

''TSO'' means an original test stand weight.

''TSC'' means a charged test stand weight.

Shipping Containers:

''SCO'' means the original or empty weight of shipping container(s).

''SCF'' means the final or full weight of shipping container(s).

Recover/Transfer System:

''RSO'' means the original weight of a recovery/transfer system.

''RSF'' means the final weight of a recovery/transfer system.

''OL'' means the net amount of oil added/removed from the recovery device and/or transfer device between the beginning and end of the test for one compressor scenario.

Weighing steps are conducted with precision and accuracy of plus or minus 1.0 gram.

## III. Test Procedure

1. Evacuate the test stand to 20 microns vacuum (pressure measured at a vacuum pump) for 12 hours.
2. Weigh the test stand (TSO).
3. If this is the first recovery operation being performed for a compressor scenario (or if a recovery efficiency is to be calculated for each recovery event), then weigh all devices used in the recovery system to deliver recovered refrigerant to a container suitable for shipment or delivery to a refrigerant reclaimer. Weigh only devices that can retain refrigerant in a manner that it will ultimately be transferred to a shipping container without significant release to the atmosphere (RSO).
4. Weigh final shipping containers (SCO).
5. Charge the test stand with an appropriate CFC-12 charge (either 6 oz. or 9 oz.).
6. Run the test stand for four (4) hours with 100% run time.
7. Turn off the test stand for twelve (12) hours. During this period evaporate all condensation that has collected on the test stand during step 6.
8. Weigh the test stand (TSC).
9. Recover CFC-12 from the test stand and perform all operations needed to transfer the recovered refrigerant to one of the shipping containers weighed in step 4. All recovery and transfer operations are to be performed in accordance with the operating instructions provided by the system's vendor. The compressor in the test stand is to remain ''off'' or be turned ''on'' during the recovery operation depending on whether the test is for a nonworking or working compressor performance evaluation. If a recovery efficiency is to be calculated for each recovery event, transfer the captured refrigerant to a shipping container and then skip to step 13. Otherwise continue. If the system allows for multiple recovery operations to be performed before transferring recovered refrigerant to a shipping container, the transfer operation can be delayed until either the maximum number of recovery operations allowed before a transfer is required have been performed, or the last of the five (5) recovery operations has been performed.
10. Perform any oil removal or oil addition operations needed to properly maintain the test stand and the devices used for recovery or transfer operations. Determine the net weight of the oil added or removed from the recovery device and/or transfer device. (OP1 for oil added, OP2 for oil removed).
11. Evacuate the test stand to 20 microns vacuum for 4 hours.
12. Return to step 2 unless five (5) recovery operations have been performed.
13. Weigh all final shipping containers that received recovered refrigerant (SCF).
14. Weigh the equipment weighed in step three (3) above (RSF). If a recovery efficiency is to be calculated for each recovery event, perform calculations and return to step one (1) for additional recoveries.

## IV. Calculations

### A. *For Five (5) Consecutive Recoveries*

*Refrigerant Recoverable* equals the summation of charged test stand weights minus original test stand weights.

$$\text{Refrigerant Recoverable} = \sum_{i=1}^{5} \left(TSC_i - TSO_i\right)$$

*Oil Loss* equals the net weight of oil added to and removed from the recovery device and/or transfer device.

$$OL = \sum_{i=1}^{5} \left(OP1_i - OP2_i\right)$$

*Refrigerant Recovered* equals the final weight of shipping containers minus the initial weight of final shipping containers, plus final recovery system weight, minus original recovery system weight, plus the net value of all additions and removals of oil from the recovery and transfer devices.

$$\text{Refrigerant Recovered} = \left(\sum_{i=1}^{n} SCF_i - SCO_i\right) + RSF - RSO - OL$$

n=number of shipping containers used.

*Recovery Efficiency* equals Refrigerant Recovered divided by Refrigerant Recoverable times 100%.

$$\text{Recovery Efficiency} = \frac{\text{Refrigerant Recovered}}{\text{Refrigerant Recoverable}}\ 100\%$$

B. *For Individual Recoveries*

*Refrigerant Recoverable* equals the charged test stand weight minus the original test stand weight.

$$\text{Refrigerant Recoverable} = TSCO - TSO$$

*Refrigerant Recovered* equals the final weight of the shipping container minus the initial weight of the shipping container plus the final weight of the recovery system minus the original recovery system weight.

$$\text{Refrigerant Recovered} = SCF - SCO + RSF - RSO$$

*Recovery Efficiency* equals Refrigerant Recovered divided by Refrigerant Recoverable times 100 percent.

$$\text{Recovery Efficiency} = \frac{\text{Refrigerant Recovered}}{\text{Refrigerant Recoverable}}\ 100\%$$

C. *Calculation of a Statistically Significant Number of Recoveries*

$$N_{add} = \left((t * sd) / (.10 * X)\right)^2 - N$$

Where:

$N_{add}$=the number of additional samples required to achieve 90% confidence.

sd=Standard deviation, or $(X/(N-1)^{5})$

X=Sample average

N=Number of samples tested

| Number of samples | t for 90% confidence |
|---|---|
| 2 | 6.814 |
| 3 | 2.920 |
| 4 | 2.353 |
| 5 | 2.132 |
| 6 | 2.015 |
| 7 | 1.943 |
| 8 | 1.895 |
| 9 | 1.860 |
| 10 | 1.833 |

Procedure:

1. Compute $N_{add}$ after completing two recoveries.
2. If $N_{add}>0$, then run an additional test.
3. Re-compute $N_{add}$. Continue to test additional samples until $N_{add}<0$.

## V. Test Procedure Approval and Certification

Each vendor of capture equipment for small appliances desiring certification will provide a representative model of its capture system and its recommended recovery procedures to an EPA approved third party laboratory for testing in accordance with this procedure. The third party laboratory will certify recovery systems that when tested in accordance with this procedure demonstrate a sufficient recovery efficiency to meet EPA regulatory requirements.

## Appendix D to Subpart F of Part 82—Standards for Becoming a Certifying Program for Technicians

### Standards for Certifying Programs

#### a. Test Preparation

Certification for Type II, Type III and Universal technicians will be dependent upon passage of a closed-book, proctored test, administered in a secure environment, by an EPA-approved certifying program.

Certification for Type I technicians will be dependent upon passage of an EPA-approved test, provided by an EPA-approved certifying program. Organizations providing Type I certification only, may chose either an on-site format, or a mail-in format, similar to what is permitted under the MVACs program.

Each certifying program must assemble tests by choosing a prescribed subset from the EPA test bank. EPA expects to have a test bank with a minimum of 500 questions, which will enable the certifying program to generate multiple tests in order to discourage cheating. Each test must include 25 questions drawn from Group 1 and 25 questions drawn from each relevant technical Group. Tests for Universal technicians will include 100 questions (25 from Group 1 and 25 from each relevant technical Group). Each 50-question test represents 10 percent of the total test bank. Questions should be divided in order to sufficiently cover each topic within the Group.

Each certifying program must show a method of randomly choosing which questions will be on the tests. Multiple versions of the test must be used during each testing event. Test answer sheets or (for those testing via the computer medium) computer files must include the name and address of the applicant, the name and address of the certifying program, and the date and location at which the test was administered.

Training material accompanying mail-in Type I tests must not include sample test questions mimicking the language of the certification test. All mail-in material will be subject to review by EPA.

Certifying programs may charge individuals reasonable fees for the administration of the tests. EPA will publish a list of all approved certifying programs periodically, including the fees charged by the programs. This information will be available from the Stratospheric Ozone Protection Hotline.

#### b. Proctoring

A certifying program for Type II, Type III and Universal technicians must designate or

arrange for the designation of at least one proctor registered for each testing event. If more than 50 people are taking tests at the same time at a given site, the certifying organization must adhere to normal testing procedures, by designating at least one additional proctor or monitor for every 50 people taking tests at that site.

The certification test for Type II, Type III and Universal technicians is a closed-book exam. The proctors must ensure that the applicants for certification do not use any notes or training materials during testing. Desks or work space must be placed in a way that discourages cheating. The space and physical facilities are to be conducive to continuous surveillance by the proctors and monitors during testing.

The proctor may not receive any benefit from the outcome of the testing other than a fee for proctoring. Proctors cannot know in advance which questions are on the tests they are proctoring.

Proctors are required to verify the identity of individuals taking the test by examining photo identification. Acceptable forms of identification include but are not limited to drivers' licenses, government identification cards, passports, and military identification.

Certifying programs for Type I technicians using the mail-in format, must take sufficient measures at the test site to ensure that tests are completed honestly by each technician. Each test for Type I certification must provide a means of verifying the identification of the individual taking the test. Acceptable forms of identification include but are not limited to drivers' licenses numbers, social security numbers, and passport numbers.

c. Test Security

A certifying program must demonstrate the ability to ensure the confidentiality and security of the test questions and answer keys through strict accountability procedures. An organization interested in developing a technician certification program will be required to describe these test security procedures to EPA.

After the completion of a test, proctors must collect all test forms, answer sheets, scratch paper and notes. These items are to be placed in a sealed envelope.

d. Test Content

All technician certification tests will include 25 questions from Group I. Group I will ask questions in the following areas:

I. Environmental impact of CFCs and HCFCs

II. Laws and regulations

III. Changing industry outlook

Type I, Type II and Type III certification tests will include 25 questions from Group II. Group II will ask questions covering sector-specific issues in the following areas:

IV. Leak detection

V. Recovery Techniques

VI. Safety

VII. Shipping

VII. Disposal

Universal Certification will include 75 questions from Group II, with 25 from each of the three sector-specific areas.

e. Grading

Tests must be graded objectively. Certifying programs must inform the applicant of their test results no later than 30 days from the date of the test. Type I certifying programs using the mail-in format, must notify the applicants of their test results no later than 30 days from the date the certifying programs received the completed test and any required documentation. Certifying programs may mail or hand deliver the results.

The passing score for the closed-book Type I, Type II, Type III and Universal certification test is 70 percent. For Type I certification tests using the mail-in format, passing score is 84 percent.

f. Proof of Certification

Certifying programs must issue a standard wallet-sized identification card no later than 30 days from the date of the test. Type I certifying programs using mail-in formats must issue cards to certified technicians no later than 30 days from the date the certifying program receives the completed test and any required documentation.

Each wallet-sized identification card must include, at a minimum, the name of the certifying program including the date the certifying program received EPA approval, the name of the person certified, the type of certification, a unique number for the certified person and the following text:

[name of person] has been certified as [Type I, Type II, Type III and/or Universal—as appropriate] technician as required by 40 CFR part 82, subpart F.

g. Recordkeeping and Reporting Requirements

1. Certifying programs must maintain records that include, but are not limited to, the names and addresses of all individuals taking the tests, the scores of all certification tests administered, and the dates and locations of all testing administered.

2. EPA must receive an activity report from all approved certifying programs by every January 30 and June 30, the first to be submitted following the first full six-month period for which the program has been approved by EPA. This report will include the pass/fail rate and testing schedules. This will allow the Agency to determine the relative progress and success of these programs. If

the certifying program believes a test bank question needs to be modified, information about that question should also be included.

3. Approved certifying programs will receive a letter of approval from EPA. Each testing center must display a copy of that letter at their place of business.

4. Approved technician certification programs that voluntarily plan to stop providing the certification test must forward all records required by this appendix, §§ 82.161, and 82.166 to another program currently approved by EPA in accordance with this appendix and with § 82.161. Approved technician certification programs that receive records of certified technicians from a program that no longer offers the certification test must inform EPA in writing at the address listed in § 82.160 within 30 days of receiving these records. The notification notice must include the name and address of the program to which the records have been transferred. If another currently approved program willing to accept the records cannot be located, these records must be submitted to EPA at the address listed at § 82.160.

5. Technician certification programs that have had their certification revoked in accordance with § 82.169 must forward all records required by this appendix, §§ 82.161, and 82.166 to EPA at the address listed in § 82.160.

h. Additional Requirements

EPA will periodically inspect testing sites to ensure compliance with EPA regulations. If testing center discrepancies are found, they must be corrected within a specified time period. If discrepancies are not corrected, EPA may suspend or revoke the certifying programs's approval. The inspections will include but are not limited to a review of the certifying programs' provisions for test security, the availability of space and facilities to conduct the administrative requirements and ensure the security of the tests, the availability of adequate testing facilities and spacing of the applicants during testing, a review of the proper procedures regarding accountability, and that there is no evidence of misconduct on the part of the certifying programs, their representatives and proctors, or the applicants for certification.

If the certifying programs offer training or provide review materials to the applicants, these endeavors are to be considered completely separate from the administration of the certification test.

i. Approval Process

EPA anticipates receiving a large number of applications from organizations seeking to become certifying programs. In order to certify as many technicians as possible in a reasonable amount of time, EPA will give priority to national programs. Below are the guidelines EPA will use:

First: Certifying programs providing at least 25 testing centers with a minimum of one site in at least 8 different states will be considered.

Second: Certifying programs forming regional networks with a minimum of 10 testing centers will be considered.

Third: Certifying programs providing testing centers in geographically isolated areas not sufficiently covered by the national or regional programs will be considered.

Fourth: All other programs applying for EPA approval will be considered.

Sample application forms may be obtained by contacting the Stratopheric Ozone Hotline at 1–800–296–1996.

j. Grandfathering

EPA will grandfather technicians who successfully completed voluntary programs whose operators seek and receive EPA approval to grandfather these technicians, in accordance with § 82.161(g). As part of this process, these certifying programs may be required to send EPA-approved supplementary information to ensure the level of the technicians' knowledge. Technicians will be required to read this supplementary information as a condition of certification. The certifying programs will also issue new identification cards meeting the requirements specified above.

k. Sample Application

EPA has provided a sample application. The Agency designed the application to demonstrate the information certifying programs must provide to EPA. Programs are not required to use this form or this format.

[58 FR 28712, May 14, 1993, as amended at 59 FR 42960, 42962, Aug. 19, 1994; 59 FR 55927, Nov. 9, 1994; 68 FR 54678, Sept. 18, 2003]

## Subpart G—Significant New Alternatives Policy Program

SOURCE: 59 FR 13147, Mar. 18, 1994, unless otherwise noted.

### § 82.170 Purpose and scope.

(a) The purpose of these regulations in this subpart is to implement section 612 of the Clean Air Act, as amended, regarding the safe alternatives policy on the acceptability of substitutes for ozone-depleting compounds. This program will henceforth be referred to as the ''Significant New Alternatives Policy'' (SNAP) program. The objectives

of this program are to identify substitutes for ozone-depleting compounds, to evaluate the acceptability of those substitutes, to promote the use of those substitutes believed to present lower overall risks to human health and the environment, relative to the class I and class II compounds being replaced, as well as to other substitutes for the same end-use, and to prohibit the use of those substitutes found, based on the same comparisons, to increase overall risks.

(b) The regulations in this subpart describe persons and substitutes subject to reporting requirements under the SNAP program and explain preparation and submission of notices and petitions on substitutes. The regulations also establish Agency procedures for reviewing and processing EPA's determinations regarding notices and petitions on substitutes. Finally, the regulations prohibit the use of alternatives which EPA has determined may have adverse effects on human health or the environment where EPA has identified alternatives in particular industrial use sectors that on an overall basis, reduce risk to human health and the environment and are currently or potentially available. EPA will only prohibit substitutes where it has identified other substitutes for a specific application that are acceptable and are currently or potentially available.

(c) Notifications, petitions and other materials requested shall be sent to: SNAP Document Control Officer, U.S. Environmental Protection Agency (6205–J), 1200 Pennsylvania Ave., NW., Washington, DC 20460.

### § 82.172 Definitions.

*Act* means the Clean Air Act, as amended, 42 U.S.C. 7401 *et seq.*

*Agency* means the U.S. Environmental Protection Agency.

*Application* means a specific use within a major industrial sector end-use.

*Class I or class II* means the specific ozone-depleting compounds described in section 602 of the Act.

*Decision* means any final determination made by the Agency under section 612 of the Act on the acceptability or unacceptability of a substitute for a class I or II compound.

*EPA* means the U.S. Environmental Protection Agency.

*End-use* means processes or classes of specific applications within major industrial sectors where a substitute is used to replace an ozone-depleting substance.

*Formulator* means any person engaged in the preparation or formulation of a substitute, after chemical manufacture of the substitute or its components, for distribution or use in commerce.

*Health and safety study* or *study* means any study of any effect of a substitute or its components on health and safety, or the environment or both, including underlying data and epidemiological studies, studies of occupational, ambient, and consumer exposure to a substitute, toxicological, clinical, and ecological, or other studies of a substitute and its components, and any other pertinent test. Chemical identity is always part of a health and safety study. Information which arises as a result of a formal, disciplined study is included in the definition. Also included is information relating to the effects of a substitute or its components on health or the environment. Any available data that bear on the effects of a substitute or its components on health or the environment would be included. Examples include:

(1) Long- and short-term tests of mutagenicity, carcinogenicity, or teratogenicity; data on behavioral disorders; dermatoxicity; pharmacological effects; mammalian absorption, distribution, metabolism, and excretion; cumulative, additive, and synergistic effects; acute, subchronic, and chronic effects; and structure/activity analyses;

(2) Tests for ecological or other environmental effects on invertebrates, fish, or other animals, and plants, including: Acute toxicity tests, chronic toxicity tests, critical life stage tests, behavioral tests, algal growth tests, seed germination tests, microbial function tests, bioconcentration or bioaccumulation tests, and model ecosystem (microcosm) studies;

(3) Assessments of human and environmental exposure, including workplace exposure, and effects of a particular substitute on the environment, including surveys, tests, and studies of:

Biological, photochemical, and chemical degradation; air, water and soil transport; biomagnification and bioconcentration; and chemical and physical properties, e.g., atmospheric lifetime, boiling point, vapor pressure, evaporation rates from soil and water, octanol/water partition coefficient, and water solubility;

(4) Monitoring data, when they have been aggregated and analyzed to measure the exposure of humans or the environment to a substitute; and

(5) Any assessments of risk to health or the environment resulting from the manufacture, processing, distribution in commerce, use, or disposal of the substitute or its components.

*Importer* means any person who imports a chemical substitute into the United States. *Importer* includes the person primarily liable for the payment of any duties on the merchandise or an authorized agent acting on his or her behalf. The term also includes, as appropriate:

(1) The consignee;

(2) The importer of record;

(3) The actual owner; and

(4) The transferee, if the right to draw merchandise in a bonded warehouse has been transferred.

*Major Industrial Use Sector or Sector* means an industrial category which EPA has reviewed under the SNAP program with historically high consumption patterns of ozone-depleting substances, including: Refrigeration and air conditioning; foam-blowing; fire suppression and explosion protection; solvents cleaning; aerosols; sterilants; tobacco expansion; pesticides; and adhesives, coatings and inks sectors.

*Manufacturer* means any person engaged in the direct manufacture of a substitute.

*Mixture* means any mixture or blend of two or more compounds.

*Person* includes an individual, corporation, partnership, association, state, municipality, political subdivision of a state, and any agency, department, or instrumentality of the United States and any officer, agent, or employee of such entities.

*Pesticide* has the meaning contained in the Federal Insecticide, Fungicide, and Rodenticide Act, 7 U.S.C. 136 *et seq.* and the regulations issued under it.

*Potentially available* is defined as any alternative for which adequate health, safety, and environmental data, as required for the SNAP notification process, exist to make a determination of acceptability, and which the Agency reasonably believes to be technically feasible, even if not all testing has yet been completed and the alternative is not yet produced or sold.

*Premanufacture Notice (PMN) Program* has the meaning described in 40 CFR part 720, subpart A promulgated under the Toxic Substances Control Act, 15 U.S.C. 2601 *et seq.*

*Producer* means any person who manufactures, formulates or otherwise creates a substitute in its final form for distribution or use in interstate commerce.

*Research and development* means quantities of a substitute manufactured, imported, or processed or proposed to be manufactured, imported, or processed solely for research and development.

*Residential use* means use by a private individual of a chemical substance or any product containing the chemical substance in or around a permanent or temporary household, during recreation, or for any personal use or enjoyment. Use within a household for commercial or medical applications is not included in this definition, nor is use in automobiles, watercraft, or aircraft.

*Significant new use* means use of a new or existing substitute in a major industrial use sector as a result of the phaseout of ozone-depleting compounds.

*Small uses* means any use of a substitute in a sector other than a major industrial use sector, or production by any producer for use of a substitute in a major industrial sector of 10,000 lbs. or less per year.

*Substitute or alternative* means any chemical, product substitute, or alternative manufacturing process, whether existing or new, intended for use as a replacement for a class I or II compound.

*Test marketing* means the distribution in interstate commerce of a substitute to no more than a limited, defined number of potential customers to explore market viability in a competitive situation. Testing must be restricted

to a defined testing period before the broader distribution of that substitute in interstate commerce.

*Use* means any use of a substitute for a Class I or Class II ozone-depleting compound, including but not limited to use in a manufacturing process or product, in consumption by the end-user, or in intermediate uses, such as formulation or packaging for other subsequent uses.

*Use restrictions* means restrictions on the use of a substitute imposing either conditions on how the substitute can be used across a sector end-use or limits on the end-uses or specific applications where it can be used within a sector.

### § 82.174 Prohibitions.

(a) No person may introduce a new substitute into interstate commerce before the expiration of 90 days after a notice is initially submitted to EPA under § 82.176(a).

(b) No person may use a substitute which a person knows or has reason to know was manufactured, processed or imported in violation of the regulations in this subpart, or knows or has reason to know was manufactured, processed or imported in violation of any use restriction in the acceptability determination, after the effective date of any rulemaking imposing such restrictions.

(c) No person may use a substitute without adhering to any use restrictions set by the acceptability decision, after the effective date of any rulemaking imposing such restrictions.

(d) No person may use a substitute after the effective date of any rulemaking adding such substitute to the list of unacceptable substitutes.

(e) *Rules Stayed for Reconsideration.* Notwithstanding any other provision of this subpart, the effectiveness of subpart G is stayed from December 8, 1994, to March 8, 1995, only as applied to use of substitutes for export.

[59 FR 13147, Mar. 18, 1994, as amended at 59 FR 63256, Dec. 8, 1994; 60 FR 3303, Jan. 13, 1995]

### § 82.176 Applicability.

(a) Any producer of a new substitute must submit a notice of intent to introduce a substitute into interstate commerce 90 days prior to such introduction. Any producer of an existing substitute already in interstate commerce must submit a notice as of July 18, 1994, if such substitute has not already been reviewed and approved by the Agency.

(b) With respect to the following substitutes, producers are exempt from notification requirements:

(1) *Substitutes already listed as acceptable.* Producers need not submit notices on substitutes that are already listed as acceptable under SNAP.

(2) *Small sectors.* Persons using substitutes in sectors other than the nine principal sectors reviewed under this program are exempt from the notification requirements. This exemption shall not be construed to nullify an unacceptability determination or to allow use of an otherwise unacceptable substitute.

(3) *Small volume use within SNAP sectors.* Within the nine principal SNAP sectors, persons introducing a substitute whose expected volume of use amounts to less than 10,000 lbs. per year within a SNAP sector are exempt from notification requirements. This exemption shall not be construed to allow use of an otherwise unacceptable substitute in any quantity. Persons taking advantage of this exemption for small uses must maintain documentation for each substitute describing how the substitute meets this small use definition. This documentation must include annual production and sales information by sector.

(4) *Research and development.* Production of substitutes for the sole purpose of research and development is exempt from reporting requirements.

(5) *Test marketing.* Use of substitutes for the sole purpose of test marketing is exempt from SNAP notification requirements until 90 days prior to the introduction of such substitutes for full-scale commercial sale in interstate commerce. Persons taking advantage of this exemption are, however, required to notify the Agency in writing that they are conducting test marketing 30 days prior to the commencement of such marketing. Notification shall include the name of the substitute, the volume used in the test marketing, intended sector end-uses,

and expected duration of the test marketing period.

(6) *Formulation changes.* In cases where replacement of class I or II compounds causes formulators to change other components in a product, formulators are exempt from reporting with respect to these auxiliary formulation changes. However, the SNAP submitter is required to notify the Agency if such changes are expected to significantly increase the environmental and human health risk associated with the use of any class I or class II substitute.

(7) *Substitutes used as feedstocks.* Producers of substitutes used as feedstocks which are largely or entirely consumed, transformed or destroyed in the manufacturing or use process are exempt from reporting requirements concerning such substitutes.

(c) Use of a substitute in the possession of an end-user as of March 18, 1994, listed as unacceptable or acceptable subject to narrowed use limits may continue until the individual end-users' existing supply, as of that date, of the substitute is exhausted. Use of substitutes purchased after March 18, 1994, is not permitted subsequent to April 18, 1994.

### § 82.178 Information required to be submitted.

(a) Persons whose substitutes are subject to reporting requirements pursuant to § 82.176 must provide the following information:

(1) *Name and description of the substitute.* The substitute should be identified by its: Chemical name; trade name(s); identification numbers; chemical formula; and chemical structure.

(2) *Physical and chemical information.* The substitute should be characterized by its key properties including but not limited to: Molecular weight; physical state; melting point; boiling point; density; taste and/or odor threshold; solubility; partition coefficients (Log $K_{ow}$, Log $K_{oc}$); atmospheric lifetime and vapor pressure.

(3) *Substitute applications.* Identification of the applications within each sector end-use in which the substitutes are likely to be used.

(4) *Process description.* For each application identified, descriptive data on processing, including in-place pollution controls.

(5) *Ozone depletion potential.* The predicted 100-year ozone depletion potential (ODP) of substitute chemicals. The submitter must also provide supporting documentation or references.

(6) *Global warming impacts.* Data on the total global warming potential of the substitute, including information on the GWP index and the indirect contributions to global warming caused by the production or use of the substitute (e.g., changes in energy efficiency). GWP must be calculated over a 100, 500 and 1000-year integrated time horizon.

(7) *Toxicity data.* Health and safety studies on the effects of a substitute, its components, its impurities, and its degradation products on any organism (e.g., humans, mammals, fish, wildlife, and plants). For tests on mammals, the Agency requires a minimum submission of the following tests to characterize substitute risks: A range-finding study that considers the appropriate exposure pathway for the specific use (e.g., oral ingestion, inhalation, etc.), and a 90-day subchronic repeated dose study in an appropriate rodent species. For certain substitutes, a cardiotoxicity study is also required. Additional mammalian toxicity tests may be identified based on the substitute and application in question. To sufficiently characterize aquatic toxicity concerns, both acute and chronic toxicity data for a variety of species are required. For this purpose, the Agency requires a minimum data set as described in ''Guidelines for Deriving Numerical National Water Quality Criteria for the Protection of Aquatic Organisms and their Uses,'' which is available through the National Technical Information Service (#PB 85–227049). Other relevant information and data summaries, such as the Material Safety Data Sheets (MSDS), should also be submitted. To assist in locating any studies previously submitted to EPA and referred to, but not included in a SNAP submission, the submitter must provide citations for the date, type of submission, and EPA Office to which they were submitted, to help EPA locate these quickly.

(8) *Environmental fate and transport.* Where available, information must be

submitted on the environmental fate and transport of substitutes. Such data shall include information on bioaccumulation, biodegradation, adsorption, volatility, transformation, and other data necessary to characterize movement and reaction of substitutes in the environment.

(9) *Flammability*. Data on the flammability of a substitute chemical or mixture are required. Specifically, the flash point and flammability limits are needed, as well as information on the procedures used for determining the flammability limits. Testing of blends should identify the compositions for which the blend itself is flammable and include fractionation data on changes in the composition of the blend during various leak scenarios. For substitutes that will be used in consumer applications, documentation of testing results conducted by independent laboratories should be submitted, where available. If a substitute is flammable, the submitter must analyze the risk of fire resulting from the use of such a substitute and assess the effectiveness of measures to minimize such risk.

(10) *Exposure data*. Available modeling or monitoring data on exposures associated with the manufacture, formulation, transport, use and disposal of a substitute. Descriptive process information for each substitute application, as described above, will be used to develop exposure estimates where exposure data are not readily available. Depending on the application, exposure profiles may be needed for workers, consumers, and the general population.

(11) *Environmental release data*. Data on emissions from the substitute application and equipment, as well as on pollutant releases or discharge to all environmental media. Submitters should provide information on release locations, and data on the quantities, including volume, of anticipated waste associated with the use of the substitute. In addition, information on anticipated waste management practices associated with the use of the substitute. Any available information on any pollution controls used or that could be used in association with the substitute (e.g., emissions reduction technologies, wastewater treatment, treatment of hazardous waste) and the costs of such technology must also be submitted.

(12) *Replacement ratio for a chemical substitute*. Information on the replacement ratio for a chemical substitute versus the class I or II substances being replaced. The term ''replacement ratio'' means how much of a substitute must be used to replace a given quantity of the class I or II substance being replaced.

(13) *Required changes in use technology*. Detail on the changes in technology needed to use the alternative. Such information should include a description of whether the substitute can be used in existing equipment—with or without some retrofit—or only in new equipment. Data on the cost (capital and operating expenditures) and estimated life of any technology modifications should also be submitted.

(14) *Cost of substitute*. Data on the expected average cost of the alternative. In addition, information is needed on the expected equipment lifetime for an alternative technology. Other critical cost considerations should be identified, as appropriate.

(15) *Availability of substitute*. If the substitute is not currently available, the timing of availability of a substitute should be provided.

(16) *Anticipated market share*. Data on the anticipated near-term and long-term nationwide substitute sales.

(17) *Applicable regulations under other environmental statutes*. Information on whether the substitute is regulated under other statutory authorities, in particular the Clean Water Act, Safe Drinking Water Act, the Resource Conservation and Recovery Act, the Federal Insecticide, Fungicide, and Rodenticide Act, the Toxic Substances Control Act, the Comprehensive Environmental Response, Compensation and Liability Act, the Emergency Planning and Community Right-to-Know Act, or other titles under the Clean Air Act.

(18) *Information already submitted to the Agency*. Information requested in the SNAP program notice that has been previously submitted to the Agency as part of past regulatory and information-gathering activities may be referenced rather than resubmitted.

Submitters who cannot provide accurate references to data sent previously to the Agency should include all requested information in the SNAP notice.

(19) *Information already available in the literature.* If any of the data needed to complete the SNAP program notice are available in the public literature, complete references for such information should be provided.

(b) The Significant New Alternatives Policy (SNAP) Information Notice is designed to provide the Agency with the information necessary to reach a decision on the acceptability of a substitute.

(1) Submitters requesting review under the SNAP program should send the completed SNAP notice to: SNAP Document Control Officer, U.S. Environmental Protection Agency (6205–J), 1200 Pennsylvania Ave., NW., Washington, DC 20460.

(2) Submitters filing jointly under SNAP and the Premanufacture Notice Program (PMN) should send the SNAP addendum along with the PMN form to: PMN Document Control Officer, U.S. Environmental Protection Agency (7407), 1200 Pennsylvania Ave., NW., Washington, DC 20460. Submitters must also send both documents to the SNAP program, with a reference to indicate the notice has been furnished to the Agency under the PMN program. Submitters providing information on new chemicals for joint review under the TSCA and SNAP programs may be required to supply additional toxicity data under TSCA section 5.

(3) Submitters filing jointly under SNAP and under the Federal Insecticide, Fungicide, and Rodenticide Act should send the SNAP form to the Office of Pesticide Programs, Registration Division, (7505C) 1200 Pennsylvania Ave., NW., Washington, DC 20460, as well as to the SNAP Document Control Officer.

## § 82.180 Agency review of SNAP submissions.

(a) *Processing of SNAP notices*—(1) *90–day review process.* The 90-day review process will begin once EPA receives a submission and determines that such submission includes data on the substitute that are complete and adequate, as described in § 82.178. The Agency may suspend or extend the review period to allow for submission of additional data needed to complete the review of the notice.

(2) *Initial review of notice.* The SNAP Document Control Officer will review the notice to ensure that basic information necessary to process the submission is present (i.e., name of company, identification of substitute, etc.). The SNAP Document Control Officer will also review substantiation of any claim of confidentiality.

(3) *Determination of data adequacy.* Upon receipt of the SNAP submission, the Agency will review the completeness of the information supporting the application. If additional data are needed, the submitter will be contacted following completion of this review. The 90-day review period will not commence until EPA has received data it judges adequate to support analysis of the submission.

(4) *Letter of receipt.* The SNAP Document Control Officer will send a letter of receipt to the submitter to confirm the date of notification and the beginning of EPA's 90-day review period. The SNAP Document Control Officer will also assign the SNAP notice a tracking number, which will be identified in the letter of receipt.

(5) *Availability of new information during review period.* If critical new information becomes available during the review period that may influence the Agency's evaluation of a substitute, the submitter must notify the Agency about the existence of such information within 10 days of learning of such data. The submitter must also inform the Agency of new studies underway, even if the results will not be available within the 90-day review period. The Agency may contact the submitter to explore extending or suspending the review period depending on the type of information received and the stage of review.

(6) *Completion of detailed review.* Once the initial data review, described in paragraphs (a)(2) and (3) of this section, has been completed, the Agency will complete a detailed evaluation of the notice. If during any time the Agency perceives a lack of information necessary to reach a SNAP determination,

it will contact the submitter and request the missing data.

(7) *Criteria for review*. To determine whether a substitute is acceptable or unacceptable as a replacement for class I or II compounds, the Agency will evaluate:

(i) Atmospheric effects and related health and environmental impacts;

(ii) General population risks from ambient exposure to compounds with direct toxicity and to increased ground-level ozone;

(iii) Ecosystem risks;

(iv) Occupational risks;

(v) Consumer risks;

(vi) Flammability; and

(vii) Cost and availability of the substitute.

(8) *Communication of decision*—(i) *Communication of decision to the submitter*. Once the SNAP program review has been completed, the Agency will notify the submitter in writing of the decision. Sale or manufacture of new substitutes may commence after the initial 90-day notification period expires even if the Agency fails to reach a decision within the 90-day review period or fails to communicate that decision or the need for additional data to the submitter. Sale or manufacture of existing substitutes may continue throughout the Agency's 90-day review.

(ii) *Communication of decision to the public*. The Agency will publish in the FEDERAL REGISTER periodic updates to the list of the acceptable and unacceptable alternatives that have been reviewed to date. In the case of substitutes proposed as acceptable with use restrictions, proposed as unacceptable or proposed for removal from either list, a rulemaking process will ensue. Upon completion of such rulemaking, EPA will publish revised lists of substitutes acceptable subject to use conditions or narrowed use limits and unacceptable substitutes to be incorporated into the Code of Federal Regulations. (See Appendices to this subpart.)

(b) *Types of listing decisions*. When reviewing substitutes, the Agency will list substitutes in one of five categories:

(1) *Acceptable*. Where the Agency has reviewed a substitute and found no reason to prohibit its use, it will list the alternative as acceptable for the end-uses listed in the notice.

(2) *Acceptable subject to use conditions*. After reviewing a notice, the Agency may make a determination that a substitute is acceptable only if conditions of use are met to minimize risks to human health and the environment. Where users intending to adopt a substitute acceptable subject to use conditions must make reasonable efforts to ascertain that other alternatives are not feasible due to safety, performance or technical reasons, documentation of this assessment must be retained on file for the purpose of demonstrating compliance. This documentation shall include descriptions of substitutes examined and rejected, processes or products in which the substitute is needed, reason for rejection of other alternatives, e.g., performance, technical or safety standards. Use of such substitutes in ways that are inconsistent with such use conditions renders them unacceptable.

(3) *Acceptable subject to narrowed use limits*. Even though the Agency can restrict the use of a substitute based on the potential for adverse effects, it may be necessary to permit a narrowed range of use within a sector end-use because of the lack of alternatives for specialized applications. Users intending to adopt a substitute acceptable with narrowed use limits must ascertain that other alternatives are not technically feasible. Companies must document the results of their evaluation, and retain the results on file for the purpose of demonstrating compliance. This documentation shall include descriptions of substitutes examined and rejected, processes or products in which the substitute is needed, reason for rejection of other alternatives, e.g., performance, technical or safety standards, and the anticipated date other substitutes will be available and projected time for switching to other available substitutes. Use of such substitutes in applications and end-uses which are not specified as acceptable in the narrowed use limit renders them unacceptable.

(4) *Unacceptable*. This designation will apply to substitutes where the Agency's review indicates that the substitute poses risk of adverse effects to

human health and the environment and that other alternatives exist that reduce overall risk.

(5) *Pending.* Submissions for which the Agency has not reached a determination will be described as pending. For all substitutes in this category, the Agency will work with the submitter to obtain any missing information and to determine a schedule for providing the missing information if the Agency wishes to extend the 90-day review period. EPA will use the authority under section 114 of the Clean Air Act to gather this information, if necessary. In some instances, the Agency may also explore using additional statutory provisions (e.g., section 5 of TSCA) to collect the needed data.

(c) *Joint processing under SNAP and TSCA.* The Agency will coordinate reviews of substitutes submitted for evaluation under both the TSCA PMN program and the CAA.

(d) *Joint processing under SNAP and FIFRA.* The Agency will coordinate reviews of substitutes submitted for evaluation under both FIFRA and the CAA.

[59 FR 13147, Mar. 18, 1994, as amended at 61 FR 25592, May 22, 1996; 61 FR 54039, Oct. 16, 1996]

### § 82.182 Confidentiality of data.

(a) *Clean Air Act provisions.* Anyone submitting information must assert a claim of confidentiality at the time of submission for any data they wish to have treated as confidential business information (CBI) under 40 CFR part 2, subpart B. Failure to assert a claim of confidentiality at the time of submission may result in disclosure of the information by the Agency without further notice to the submitter. The submitter should also be aware that under section 114(c), emissions data may not be claimed as confidential.

(b) *Substantiation of confidentiality claims.* At the time of submission, EPA requires substantiation of any confidentiality claims made. Failure to provide any substantiation may result in disclosure of information without further notice by the Agency. All submissions must include adequate substantiation in order for an acceptability determination on a substitute to be published. Moreover, under 40 CFR part 2, subpart B, there are further instances in which confidentiality assertions may later be reviewed even when confidentiality claims are initially received. The submitter will also be contacted as part of such an evaluation process.

(c) *Confidentiality provisions for toxicity data.* In the event that toxicity or health and safety studies are listed as confidential, this information cannot be maintained as confidential where such data are also submitted under TSCA or FIFRA, to the extent that confidential treatment is prohibited under those statutes. However, information contained in a toxicity study that is not health and safety data and is not relevant to the effects of a substance on human health and the environment (e.g., discussion of process information, proprietary blends) can be maintained as confidential subject to 40 CFR part 2, subpart B.

(d) *Joint submissions under other statutes.* Information submitted as part of a joint submission to either SNAP/TSCA or SNAP/FIFRA must adhere to the security provisions of the program offices implementing these statutes. For such submissions, the SNAP handling of such notices will follow the security provisions under these statutes.

### § 82.184 Petitions.

(a) *Who may petition.* Any person may petition the Agency to amend existing listing decisions under the SNAP program, or to add a new substance to any of the SNAP lists.

(b) *Types of petitions.* Five types of petitions exist:

(1) Petitions to add a substitute not previously reviewed under the SNAP program to the acceptable list. This type of petition is comparable to the 90-day notifications, except that it would generally be initiated by entities other than the companies that manufacture, formulate, or otherwise use the substitute. Companies that manufacture, formulate, or use substitutes that want to have their substitutes added to the acceptable list should submit information on the substitute under the 90-day review program;

(2) Petitions to add a substitute not previously reviewed under the SNAP program to the unacceptable list;

(3) Petitions to delete a substitute from the acceptable list and add it to the unacceptable list or to delete a substitute from the unacceptable and add it to the acceptable list;

(4) Petitions to add or delete use restrictions on an acceptability listing.

(5) Petitions to grandfather use of a substitute listed as unacceptable or acceptable subject to use restrictions.

(c) *Content of the petition*. The Agency requires that the petitioner submit information on the type of action requested and the rationale for the petition. Petitions in paragraphs (b)(1) and (2) of this section must contain the information described in §82.178, which lists the items to be submitted in a 90-day notification. For petitions that request the re-examination of a substitute previously reviewed under the SNAP program, the submitter must also reference the prior submittal or existing listing. Petitions to grandfather use of an unacceptable substitute must describe the applicability of the test to judge the appropriateness of Agency grandfathering as established by the United States District Court for the District of Columbia Circuit (see *Sierra Club* v. *EPA*, 719 F.2d 436 (D.C. Cir. 1983)). This test includes whether the new rule represents an abrupt departure from previously established practice, the extent to which a party relied on the previous rule, the degree of burden which application of the new rule would impose on the party, and the statutory interest in applying the new rule immediately.

(d) *Petition process*. (1) Notification of affected companies. If the petition concerns a substitute previously either approved or restricted under the SNAP program, the Agency will contact the original submitter of that substitute.

(2) *Review for data adequacy*. The Agency will review the petition for adequacy of data. As with a 90-day notice, the Agency may suspend review until the petitioner submits the information necessary to evaluate the petition. To reach a timely decision on substitutes, EPA may use collection authorities such as those contained in section 114 of the Clean Air Act as amended, as well as information collection provisions of other environmental statutes.

(3) *Review procedures*. To evaluate the petition, the Agency may submit the petition for review to appropriate experts inside and outside the Agency.

(4) *Timing of determinations*. If data are adequate, as described in §82.180, the Agency will respond to the petition within 90 days of receiving a complete petition. If the petition is inadequately supported, the Agency will query the petitioner to fill any data gaps before the 90-day review period begins, or may deny the petition because data are inadequate.

(5) *Rulemaking procedures*. EPA will initiate rulemaking whenever EPA grants a petition to add a substance to the list of unacceptable substitutes, remove a substance from any list, or change or create an acceptable listing by imposing or deleting use conditions or use limits.

(6) *Communication of decision*. The Agency will inform petitioners within 90 days of receiving a complete petition whether their request has been granted or denied. If a petition is denied, the Agency will publish in the FEDERAL REGISTER an explanation of the determination. If a petition is granted, the Agency will publish the revised SNAP list incorporating the final petition decision within 6 months of reaching a determination or in the next scheduled update, if sooner, provided any required rulemaking has been completed within the shorter period.

## APPENDIX A TO SUBPART G OF PART 82—SUBSTITUTES SUBJECT TO USE RESTRICTIONS AND UNACCEPTABLE SUBSTITUTES

### REFRIGERANTS

Unacceptable Substitutes

| End-use | Substitute | Decision | Comments |
|---|---|---|---|
| CFC-11 centrifugal chillers (retrofit). | HCFC-141b | Unacceptable | Has a high ODP relative to other alternatives. |

REFRIGERANTS—Continued

Unacceptable Substitutes

| End-use | Substitute | Decision | Comments |
|---|---|---|---|
| CFC-12 centrifugal chillers (retrofit). | HCFC-22/HFC-142b/ CFC-12. | Unacceptable ..... | As a blend of both Class I and Class II substances, it has a higher ODP than use of Class II substances. |
| | Hydrocarbon blend A ..... | Unacceptable ..... | Flammability is a serious concern. Data have not been submitted to demonstrate it can used safely in this end-use. |
| CFC-11, CFC-12, CFC-113, CFC-114, R-500 centrifugal chillers (new equipment/NIKs). | HCFC-22/HFC-142b/ CFC-12. | Unacceptable ..... | As a blend of both Class I and Class II substances, it has a higher ODP than use of Class II substances. |
| | Hydrocabon blend A ..... | Unacceptable ..... | Flammability is a serious concern. Data have not been submitted to demonstrate it can be used safely in this end-use. |
| | HCFC-141b ..... | Unacceptable ..... | Has a high ODP relative to other alternatives. |
| CFC-12 reciprocating chillers (retrofit). | HCFC-22/HFC-142b/ CFC-12. | Unacceptable ..... | As a blend of both Class I and Class II substances, it has a higher ODP than use of Class II substances. |
| | Hydrocarbon blend A ..... | Unacceptable ..... | Flammability is a serious concern. Data have not been submitted to demonstrate it can be used safely in this end-use. |
| CFC-12 reciprocating chillers (new equipment/NIKs). | HCFC-22/HFC-142b/ CFC-12. | Unacceptable ..... | As a blend of both Class I and Class II substances, it has a higher ODP than use of Class II substances. |
| | Hydrocarbon blend A ..... | Unacceptable ..... | Flammability is a serious concern. Data have not been submitted to demonstrate it can be used safely in this end-use. |
| CFC-11, CFC-12, R-502 industrial process refrigeration (retrofit). | HCFC-22/HFC-142b/ CFC-12. | Unacceptable ..... | As a blend of both Class I and Class II substances, it has a higher ODP than use of Class II substances. |
| CFC-11, CFC-12, R-502 industrial process refrigeration (new equipment/NIKs). | HCFC-22/HFC-142b/ CFC-12. | Unacceptable ..... | As a blend of both Class I and Class II substances, it has a higher ODP than use of Class II substances. |
| CFC-12, R-502 ice skating rinks (retrofit). | HCFC-22/HFC-142b/ CFC-12. | Unacceptable ..... | As a blend of both Class I and Class II substances, it has a higher ODP than use of Class II substances. |
| | Hydrocarbon blend A ..... | Unacceptable ..... | Flammability is a serious concern. Data have not been submitted to demonstrate it can be used safely in this end-use. |
| CFC-12, R-502 ice skating rinks (new equipment/NIKs). | HCFC-22/HFC-142b/ CFC-12. | Unacceptable ..... | As a blend of both Class I and Class II substances, it has a higher ODP than use of Class II substances. |
| | Hydrocarbon blend A ..... | Unacceptable ..... | Flammability is a serious concern. Data have not been submitted to demonstrate it can be used safely in this end-use. |
| CFC-12, R-502 cold storage warehouses (retrofit). | HCFC-22/HFC-142b/ CFC-12. | Unacceptable ..... | As a blend of both Class I and Class II substances, it has a higher ODP than use of Class II substances. |
| | Hydrocarbon blend A ..... | Unacceptable ..... | Flammability is a serious concern. Data have not been submitted to demonstrate it can be used safely in this end-use. |
| CFC-12, R-502 cold storage warehouses (new equipment/NIKs). | HCFC-22/HFC-142b/ CFC-12. | Unacceptable ..... | As a blend of both Class I and Class II substances, it has a higher ODP than use of Class II substances. |
| | Hydrocarbon blend A ..... | Unacceptable ..... | Flammability is a serious concern. Data have not been submitted to demonstrate it can be used safely in this end-use. |
| CFC-12, R-500, R-502 refrigerated transport (retrofit). | HCFC-22/HFC-142b/ CFC-12. | Unacceptable ..... | As a blend of both Class I and Class II substances, it has a higher ODP than use of Class II substances. |
| | Hydrocarbon blend A ..... | Unacceptable ..... | Flammability is a serious concern. Data have not been submitted to demonstrate it can be used safely in this end-use. |
| CFC-12, R-500, R-502 refrigerated transport (new equipment/NIKs). | HCFC-22/HFC-142b/ CFC-12. | Unacceptable ..... | As a blend of both Class I and Class II substances, it has a higher ODP than use of Class II substances. |
| | Hydrocarbon blend A ..... | Unacceptable ..... | Flammability is a serious concern. Data have not been submitted to demonstrate it can be used safely in this end-use. |

REFRIGERANTS—Continued

Unacceptable Substitutes

| End-use | Substitute | Decision | Comments |
|---|---|---|---|
| CFC-12, R-502 retail food refrigeration (retrofit). | HCFC-22/HFC-142b/CFC-12. | Unacceptable | As a blend of both Class I and Class II substances, it has a higher ODP than use of Class II substances. |
| | Hydrocarbon blend A | Unacceptable | Flammability is a serious concern. Data have not been submitted to demonstrate it can be used safely in this end-use. |
| CFC-12, R-502 retail food refrigeration (new equipment/NIKs). | HCFC-22/HFC-142b/CFC-12. | Unacceptable | As a blend of both Class I and Class II substances, it has a higher ODP than use of Class II substances. |
| | Hydrocarbon blend A | Unacceptable | Flammability is a serious concern. Data have not been submitted to demonstrate it can be used safely in this end-use. |
| CFC-12, R-502 commercial ice machines (retrofit). | HCFC-22/HFC-142b/CFC-12. | Unacceptable | As a blend of both Class I and Class II substances, it has a higher ODP than use of Class II substances. |
| | Hydrocarbon blend A | Unacceptable | Flammability is a serious concern. Data have not been submitted to demonstrate it can be used safely in this end-use. |
| CFC-12, R-502 commercial ice machines (new equipment/NIKs). | HCFC-22/HFC-142b/CFC-12. | Unacceptable | As a blend of both Class I and Class II substances, it has a higher ODP than use of Class II substances. |
| | Hydrocarbon blend A | Unacceptable | Flammability is a serious concern. Data have not been submitted to demonstrate it can be used safely in this end-use. |
| CFC-12 vending machines (retrofit). | HCFC-22/HFC-142b/CFC-12. | Unacceptable | As a blend of both Class I and Class II substances, it has a higher ODP than use of Class II substances. |
| | Hydrocarbon blend A | Unacceptable | Flammability is a serious concern. Data have not been submitted to demonstrate it can be used safely in this end-use. |
| CFC-12 vending machines (new equipment/NIKs). | HCFC-22/HFC-142b/CFC-12. | Unacceptable | As a blend of both Class I and Class II substances, it has a higher ODP than use of Class II substances. |
| | Hydrocarbon blend A | Unacceptable | Flammability is a serious concern. Data have not been submitted to demonstrate it can be used safely in this end-use. |
| CFC-12, water coolers (retrofit). | HCFC-22/HFC-142b/CFC-12. | Unacceptable | As a blend of both Class I and Class II substances, it has a higher ODP than use of Class II substances. |
| | Hydrocarbon blend A | Unacceptable | Flammability is a serious concern. Data have not been submitted to demonstrate it can be used safely in this end-use. |
| CFC-12, water coolers (New equipment/NIKs). | HCFC-22/HFC-142b/CFC-12. | Unacceptable | As a blend of both Class I and Class II substances, it has a higher ODP than use of Class II substances. |
| | Hydrocarbon blend A | Unacceptable | Flammability is a serious concern. Data have not been submitted to demonstrate it can be used safely in this end-use. |
| CFC-12, household refrigerators (retrofit). | HCFC-22/HFC-142b/CFC-12. | Unacceptable | As a blend of both Class I and Class II substances, it has a higher ODP than use of Class II substances. |
| | Hydrocarbon blend A | Unacceptable | Flammability is a serious concern. Data have not been submitted to demonstrate it can be used safely in this end-use. |
| CFC-12, household refrigerators (new equipment/NIKs). | HCFC-22/HFC-142b/CFC-12. | Unacceptable | As a blend of both Class I and Class II substances, it has a higher ODP than use of Class II substances. |
| | Hydrocarbon blend A | Unacceptable | Flammability is a serious concern. Data have not been submitted to demonstrate it can be used safely in this end-use. |
| CFC-12, R-502 household freezers (retrofit). | HCFC-22/HFC-142b/CFC-12. | Unacceptable | As a blend of both Class I and Class II substances, it has a higher ODP than use of Class II substances. |
| | Hydrocarbon blend A | Unacceptable | Flammability is a serious concern. Data have not been submitted to demonstrate it can be used safely in this end-use. |
| CFC-12, 502 household freezers (new equipment/NIKs). | HCFC-22/HFC-142b/CFC-12. | Unacceptable | As a blend of both Class I and Class II substances, it has a higher ODP than use of Class II substances. |

REFRIGERANTS—Continued

Unacceptable Substitutes

| End-use | Substitute | Decision | Comments |
|---|---|---|---|
| | Hydrocarbon blend A ..... | Unacceptable ..... | Flammability is a serious concern. Data have not been submitted to demonstrate it can be used safely in this end-use. |
| CFC-12, R-500 residential dehumidifiers (retrofit). | HCFC-22/HFC-142b/CFC-12. | Unacceptable ..... | As a blend of both Class I and Class II substances, it has a higher ODP than use of Class II substances. |
| | Hydrocarbon blend A ..... | Unacceptable ..... | Flammability is a serious concern. Data have not been submitted to demonstrate it can be used safely in this end-use. |
| CFC-12, R-500 residential dehumidifiers (new equipment/NIKs). | HCFC-22/HFC-142b/CFC-12. | Unacceptable ..... | As a blend of both Class I and Class II substances, it has a higher ODP than use of Class II substances. |
| | Hydrocarbon blend A ..... | Unacceptable ..... | Flammability is a serious concern. Data have not been submitted to demonstrate it can be used safely in this end-use. |
| CFC-12, motor vehicle air conditioners (retrofit). | HCFC-22/HFC-142b/CFC-12. | Unacceptable ..... | As a blend of both Class I and Class II substances, it has a higher ODP than use of Class II substances. |
| | Hydrocarbon blend A ..... | Unacceptable ..... | Flammability is a serious concern. Data have not been submitted to demonstrate it can be used safely in this end-use. |
| CFC-12, motor vehicle air conditioners (new equipment/NIKs). | HCFC-22/HFC-142b/CFC-12. | Unacceptable ..... | As a blend of both Class I and Class II substances, it has a higher ODP than use of Class II substances. |
| | Hydrocarbon blend A ..... | Unacceptable ..... | Flammability is a serious concern. Data have not been submitted to demonstrate it can be sued safely in this end-use. |

FOAMS

Unacceptable Substitutes

| End-use | Substitute | Decision | Comments |
|---|---|---|---|
| CFC-11 Polyolefin ..... | HCFC-141b (or blends thereof). | Unacceptable ..... | HCFC-141b has an ODP of 0.11, almost equivalent to that of methyl chloroform, a Class I substance. The Agency believes that non-ODP alternatives are sufficiently available to render the use of HCFC-141b unnecessary in polyolefin foams. |

SUBSTITUTES ACCEPTABLE SUBJECT TO NARROWED USE LIMITS

| End-use | Substitute | Decision | Comments |
|---|---|---|---|
| Electronics cleaning w/ CFC-113, MCF. | Perfluoro-carbons (C5F12, C6F12, C6F14, C7F16, C8F18, C5F11NO, C6F13NO, C7F15NO, and C8F16). | Acceptable for high-performance, precision-engineered applications only where reasonable efforts have been made to ascertain that other alternatives are not technically feasible due to performance or safety requirements. | The principal environmental characteristic of concern for PFCs is that they have long atmospheric lifetimes and high global warming potentials. Although actual contributions to global warming depend upon the quantities of PFCs emitted, the effects are for practical purposes irreversible.<br>Users must observe this limitation on PFC acceptability by conducting a reasonable evaluation of other substitutes to determine that PFC use is necessary to meet performance or safety requirements. Documentation of this evaluation must be kept on file.<br>For additional guidance regarding applications in which PFCs may be appropriate, users should consult the Preamble for this rulemaking. |

SUBSTITUTES ACCEPTABLE SUBJECT TO NARROWED USE LIMITS—Continued

| End-use | Substitute | Decision | Comments |
|---|---|---|---|
| Precision cleaning w/ CFC-113, MCF. | Perfluoro-carbons (C5F12, C6F12, C6F14, C7F16, C8F18, C5F11NO, C6F13NO, C7F15NO, and C8F16). | Acceptable for high-performance, precision-engineered applications only where reasonable efforts have been made to ascertain that other alternatives are not technically feasible due to performance or safety requirements. | The principal environmental characteristic of concern for PFCs is that they have long atmospheric lifetimes and high global warming potentials. Although actual contributions to global warming depend upon the quantities of PFCs emitted, the effects are for practical purposes irreversible.<br>Users must observe this limitation on PFC acceptability by conducting a reasonable evaluation of other substitutes to determine that PFC use is necessary to meet performance or safety requirements. Documentation of this evaluation must be kept on file.<br>For additional guidance regarding applications in which PFCs may be appropriate, users should consult the Preamble for this rulemaking. |

UNACCEPTABLE SUBSTITUTES

| End-use | Substitute | Decision | Comments |
|---|---|---|---|
| Metals cleaning w/CFC-113. | HCFC 141b and its blends. | Unacceptable ..... | High ODP; other alternatives exist. Effective date: As of 30 days after final rule for uses in new equipment (including retrofits made after the effective date); as of January 1, 1996, for uses in existing equipment. EPA will grant, if necessary, narrowed use acceptability listings for CFC-113 past the effective date of the prohibition. |
| Metals cleaning w/MCF .. | HCFC 141b and its blends. | Unacceptable ..... | High ODP; other alternatives exist. Effective date: As of 30 days after final rule for uses in new equipment (including retrofits made after the effective date); as of January 1, 1996, for uses in existing equipment. |
| Electronics cleaning w/ CFC-113. | HCFC 141b and its blends. | Unacceptable ..... | High ODP; other alternatives exist. Effective date: As of 30 days after final rule for uses in new equipment (including retrofits made after the effective date); as of January 1, 1996, for uses in existing equipment. EPA will grant, if necessary, narrowed use acceptability listings for CFC-113 past the effective date of the prohibition. |
| Electronics cleaning w/ MCF. | HCFC 141b and its blends. | Unacceptable ..... | High ODP; other alternatives exist. Effective date: As of 30 days after final rule for uses in new equipment (including retrofits made after the effective date); as of January 1, 1996, for uses in existing equipment. |
| Precision cleaning w/ CFC-113. | HCFC 141b and its blends. | Unacceptable ..... | High ODP; other alternatives exist. Effective date: As of 30 days after final rule for uses in new equipment (including retrofits made after the effective date); as of January 1, 1996, for uses in existing equipment. EPA will grant, if necessary, narrowed use acceptability listings for CFC-113 past the effective date of the prohibition. |
| Precision cleaning w/ MCF. | HCFC 141b and its blends. | Unacceptable ..... | High ODP; other alternatives exist. Effective date: As of 30 days after final rule for uses in new equipment (including retrofits made after the effective date); as of January 1, 1996, for uses in existing equipment. |

FIRE SUPPRESSION AND EXPLOSION PROTECTION STREAMING AGENTS

Substitutes Acceptable Subject to Narrowed Use Limits

| End-use | Substitute | Decision | Conditions | Comments |
|---|---|---|---|---|
| Halon 1211 Streaming Agents. | [CFC Blend] | Acceptable in non-residential uses only. | | Use of CFCs are controlled under CAA section 610 which bans use of CFCs in pressurized dispensers, and therefore are not permitted for use in portable fire extinguishers. EPA will list this agent as proposed unacceptable in the next SNAP proposed rulemaking.<br>Because CFCs are a Class I substance, production will be phased out by January 1, 1996.<br>See additional comments 1, 2. |
| | HBFC–22B1 | | Acceptable in nonresidential uses only. | Proper procedures regarding the operation of the extinguisher and ventilation following dispensing the extinguishant is recommended. Worker exposure may be a concern in small office areas.<br>HBFC–22B1 is considered an interim substitute for Halon 1211. Because the HBFC–22B1 has an ODP of .74, production will be phased out (except for essential uses) on January 1, 1996.<br>This agent was submitted to the Agency as a Premanufacture Notice (PMN) and is presently subject to requirements contained in a Toxic Substance Control Act (TSCA) Consent Order.<br>See additional comments 1, 2. |
| | $C_6F_{14}$ | Acceptable for non-residential uses where other alternatives are not technically feasible due to performance or safety requirements:. | | Users must observe the limitations on PFC acceptability by making reasonable effort to undertake the following measures:<br>(i) conduct an evaluation of foreseeable conditions of end use;<br>(ii) determine that the physical or chemical properties or other technical constraints of the other available agents preclude their use; and |
| | | a. due to the physical or chemical properties of the agent, or. | | (iii) determine that human exposure to the other alternative extinguishing agents may approach or result in cardiosensitization or other unacceptable toxicity effects under normal operating conditions;<br>Documentation of such measures must be available for review upon request. |
| | | b. where human exposure to the extinguishing agent may approach cardiosensitization levels or result in other unacceptable health effects under normal operating conditions. | | The principal environmental characteristic of concern for PFCs is that they have high GWPs and long atmospheric lifetimes. Actual contributions to global warming depend upon the quantities of PFCs emitted.<br>For additional guidance regarding applications in which PFCs may be appropriate, users should consult the description of potential uses which is included in the preamble to this rulemaking.<br>See additional comments 1, 2. |

Additional Comments:

1—Discharge testing and training should be strictly limited only to that which is essential to meet safety or performance requirements.

2—The agent should be recovered from the fire protection system in conjunction with testing or servicing, and recycled for later use or destroyed.

FIRE SUPPRESSION AND EXPLOSION PROTECTION STREAMING AGENTS

Unacceptable Substitutes

| End-use | Substitute | Decision | Comments |
|---|---|---|---|
| Halon 1211 Streaming Agents. | [CFC-11] ..... | Unacceptable ..... | This agent has been suggested for use on large outdoor fires for which non-ozone depleting alternatives are currently used. |

[59 FR 13147, Mar. 18, 1994, as amended at 67 FR 4200, Jan. 29, 2002]

## APPENDIX B TO SUBPART G OF PART 82—SUBSTITUTES SUBJECT TO USE RESTRICTIONS AND UNACCEPTABLE SUBSTITUTES

REFRIGERANTS—ACCEPTABLE SUBJECT TO USE CONDITIONS

| Application | Substitute | Decision | Conditions | Comments |
|---|---|---|---|---|
| CFC-12 Automobile Motor Vehicle Air Conditioning (Retrofit and New Equipment/NIKS). | HFC-134a, R-401C, HCFC Blend Beta. | Acceptable ..... | —must be used with unique fittings.<br>—must be used with detailed labels.<br>—all CFC-12 must be removed from the system prior to retrofitting.<br>Refer to the text for a full description. | EPA is concerned that the existence of several substitutes in this end-use may increase the likelihood of significant refrigerant cross-contamination and potential failure of both air conditioning systems and recovery/recycling equipment.<br>For the purposes of this rule, no distinction is made between ''retrofit'' and ''drop-in'' refrigerants; retrofitting a car to use a new refrigerant includes all procedures that result in the air conditioning system using a new refrigerant. |
| CFC–12 Automobile Motor Vehicle Air Conditioning (New equipment only). | R–152a as a substitute for CFC–12. | Acceptable subject to use conditions. | Engineering strategies and/or devices shall be incorporated into the system such that foreseeable leaks into the passenger compartment do not result in R–152a concentrations of 3.7% v/v or above in any part of the free space[1] inside the passenger compartment for more than 15 seconds when the car ignition is on.<br>Manufacturers must adhere to all the safety requirements listed in the Society of Automotive Engineers (SAE) Standard J639, including unique fittings and a flammable refrigerant warning label as well as SAE Standard J2773. | Additional training for service technicians recommended.<br>Manufacturers should conduct and keep on file failure mode and Effect Analysis (FMEA) on the MVAC as stated in SAE J1739. |
| CFC–12 Automobile Motor Vehicle Air Conditioning (New equipment in passenger cars and light-duty trucks only). | HFO–1234yf as a substitute for CFC–12. | Acceptable subject to use conditions. | Manufacturers must adhere to all of the safety requirements listed in the Society of Automotive Engineers (SAE) Standard J639 (adopted 2011), including requirements for: unique fittings, flammable refrigerant warning label, high-pressure compressor cut-off switch and pressure relief devices. For connections with refrigerant containers of 20 lbs or greater, use fittings consistent with SAE J2844. | Additional training for service technicians recommended.<br>Observe requirements of Significant New Use Rule at 40 CFR 721.10182.<br>HFO–1234yf is also known as 2,3,3,3-tetrafluoro-prop-1-ene (CAS No 754–12–1). |

REFRIGERANTS—ACCEPTABLE SUBJECT TO USE CONDITIONS—Continued

| Application | Substitute | Decision | Conditions | Comments |
|---|---|---|---|---|
| | | | Manufacturers must conduct Failure Mode and Effect Analysis (FMEA) as provided in SAE J1739 (adopted 2009). Manufacturers must keep the FMEA on file for at least three years from the date of creation. | |

[1] Free space is defined as the space inside the passenger compartment excluding the space enclosed by the ducting in the HVAC module.

NOTE: The use conditions in this appendix contain references to certain standards from SAE International. The standards are incorporated by reference and the referenced sections are made part of the regulations in part 82:

1. SAE J639. Safety Standards for Motor Vehicle Refrigerant Vapor Compression Systems. February 2011 edition. SAE International.

2. SAE J1739. Potential Failure Mode and Effects Analysis in Design (Design FMEA), Potential Failure Mode and Effects Analysis in Manufacturing and Assembly Processes (Process FMEA). January 2009 edition. SAE International.

3. SAE J2844. R–1234yf (HFO–1234yf) New Refrigerant Purity and Container Requirements for Use in Mobile Air-Conditioning Systems. February 2011 edition. SAE International.

The Director of the Federal Register approves this incorporation by reference in accordance with 5 U.S.C. 552(a) and 1 CFR part 51. You may obtain a copy from SAE Customer Service, 400 Commonwealth Drive, Warrendale, PA 15096–0001 USA; e-mail: *CustomerService@sae.org;* Telephone: 1–877–606–7323 (U.S. and Canada only) or 1–724–776–4970 (outside the U.S. and Canada); Internet address: *http://store.sae.org/dlabout.htm.*

You may inspect a copy at U.S. EPA's Air Docket; EPA West Building, Room 3334; 1301 Constitution Ave., NW.; Washington, DC or at the National Archives and Records Administration (NARA). For questions regarding access to these standards, the telephone number of EPA's Air Docket is 202–566–1742. For information on the availability of this material at NARA, call 202–741–6030, or go to: *http://www.archives.gov/federal_register/code_of_federal_regulations/ibr_locations.html.*

REFRIGERANTS—ACCEPTABLE SUBJECT TO NARROWED USE LIMITS

| End-use | Substitute | Decision | Comments |
|---|---|---|---|
| CFC-11, CFC-12, CFC-113, CFC-114, CFC-115 Non-Mechanical Heat Transfer, New. | $C_3F_8$, $C_4F_{10}$, $C_5F_{12}$, $C_5F_{11}NO$, $C_6F_{14}$, $C_6F_{13}NO$, $C_7F_{16}$, $C_7F_{15}NO$, $C_8F_{18}$, $C_8F_{16}O$, and $C_9F_{21}N$. | Acceptable only where no other alternatives are technically feasible due to safety or performance requirements. | Users must observe the limitations on PFC acceptability by determining that the physical or chemical properties or other technical constraints of the other available agents preclude their use. Documentation of such measures must be available for review upon request.<br>The principal environmental characteristic of concern for PFCs is that they have high GWPs and long atmospheric lifetimes. EPA strongly recommends recovery and recycling of these substitutes. |

REFRIGERANTS—UNACCEPTABLE SUBSTITUTES

| End-use | Substitute | Decision | Comments |
|---|---|---|---|
| CFC-11, CFC-12, CFC-113, CFC-114, R-500 Centrifugal Chillers (Retrofit and New Equipment/NIKs). | R-405A | Unacceptable | R-405A contains R-c318, a PFC, which has an extremely high GWP and lifetime. Other substitutes exist which do not contain PFCs. |
| | Hydrocarbon Blend B | Unacceptable | Flammability is a serious concern. Data have not been submitted to demonstrate it can be used safely in this end-use. |

REFRIGERANTS—UNACCEPTABLE SUBSTITUTES—Continued

| End-use | Substitute | Decision | Comments |
|---|---|---|---|
| CFC-12 Reciprocating Chillers (Retrofit and New Equipment/NIKs). | R-405A | Unacceptable | R-405A contains R-c318, a PFC, which has an extremely high GWP and lifetime. Other substitutes exist which do not contain PFCs. |
| | Hydrocarbon Blend B | Unacceptable | Flammability is a serious concern. Data have not been submitted to demonstrate it can be used safely in this end-use. |
| CFC-11, CFC-12, R-502 Industrial Process Refrigeration (Retrofit and New Equipment/NIKs). | R-403B | Unacceptable | R-403B contains R-218, a PFC, which has an extremely high GWP and lifetime. Other substitutes exist which do not contain PFCs. |
| | R-405A | Unacceptable | R-405A contains R-c318, a PFC, which has an extremely high GWP and lifetime. Other substitutes exist which do not contain PFCs. |
| CFC-12, R-502 Ice Skating Rinks (Retrofit and New Equipment/NIKs). | R-405A | Unacceptable | R-405A contains R-c318, a PFC, which has an extremely high GWP and lifetime. Other substitutes exist which do not contain PFCs. |
| | Hydrocarbon Blend B | Unacceptable | Flammability is a serious concern. Data have not been submitted to demonstrate it can be used safely in this end-use. |
| CFC-12, R-502 Cold Storage Warehouses (Retrofit and New Equipment/NIKs). | R-403B | Unacceptable | R-403B contains R-218, a PFC, which has an extremely high GWP and lifetime. Other substitutes exist which do not contain PFCs. |
| | R-405A | Unacceptable | R-405A contains R-c318, a PFC, which has an extremely high GWP and lifetime. Other substitutes exist which do not contain PFCs. |
| | Hydrocarbon Blend B | Unacceptable | Flammability is a serious concern. Data have not been submitted to demonstrate it can be used safely in this end-use. |
| CFC-12, R-500, R-502 Refrigerated Transport (Retrofit and New Equipment/NIKs). | R-403B | Unacceptable | R-403B contains R-218, a PFC, which has an extremely high GWP and lifetime. Other substitutes exist which do not contain PFCs. |
| | R-405A | Unacceptable | R-405A contains R-c318, a PFC, which has an extremely high GWP and lifetime. Other substitutes exist which do not contain PFCs. |
| | Hydrocarbon Blend B | Unacceptable | Flammability is a serious concern. Data have not been submitted to demonstrate it can be used safely in this end-use. |
| CFC-12, R-502 Retail Food Refrigeration (Retrofit and New Equipment/NIKs). | R-403B | Unacceptable | R-403B contains R-218, a PFC, which has an extremely high GWP and lifetime. Other substitutes exist which do not contain PFCs. |
| | R-405A | Unacceptable | R-405A contains R-c318, a PFC, which has an extremely high GWP and lifetime. Other substitutes exist which do not contain PFCs. |
| | Hydrocarbon Blend B | Unacceptable | Flammability is a serious concern. Data have not been submitted to demonstrate it can be used safely in this end-use. |
| CFC-12, R-502 Commercial Ice Machines (Retrofit and New Equipment/NIKs). | R-403B | Unacceptable | R-403B contains R-218, a PFC, which has an extremely high GWP and lifetime. Other substitutes exist which do not contain PFCs. |
| | R-405A | Unacceptable | R-405A contains R-c318, a PFC, which has an extremely high GWP and lifetime. Other substitutes exist which do not contain PFCs. |
| | Hydrocarbon Blend B | Unacceptable | Flammability is a serious concern. Data have not been submitted to demonstrate it can be used safely in this end-use. |
| CFC-12 Vending Machines (Retrofit and New Equipment/NIKs). | R-405A | Unacceptable | R-405A contains R-c318, a PFC, which has an extremely high GWP and lifetime. Other substitutes exist which do not contain PFCs. |

REFRIGERANTS—UNACCEPTABLE SUBSTITUTES—Continued

| End-use | Substitute | Decision | Comments |
|---|---|---|---|
| | Hydrocarbon Blend B | Unacceptable | Flammability is a serious concern. Data have not been submitted to demonstrate it can be used safely in this end-use. |
| CFC-12 Water Coolers (Retrofit and New Equipment/NIKs). | R-405A | Unacceptable | R-405A contains R-c318, a PFC, which has an extremely high GWP and lifetime. Other substitutes exist which do not contain PFCs. |
| | Hydrocarbon Blend B | Unacceptable | Flammability is a serious concern. Data have not been submitted to demonstrate it can be used safely in this end-use. |
| CFC-12 Household Refrigerators (Retrofit and New Equipment/NIKs). | R-405A | Unacceptable | R-405A contains R-c318, a PFC, which has an extremely high GWP and lifetime. Other substitutes exist which do not contain PFCs. |
| | Hydrocarbon Blend B | Unacceptable | Flammability is a serious concern. Data have not been submitted to demonstrate it can be used safely in this end-use. |
| CFC-12, R-502 Household Freezers (Retrofit and New Equipment/NIKs). | R-403B | Unacceptable | R-403B contains R-218, a PFC, which has an extremely high GWP and lifetime. Other substitutes exist which do not contain PFCs. |
| | R-405A | Unacceptable | R-405A contains R-c318, a PFC, which has an extremely high GWP and lifetime. Other substitutes exist which do not contain PFCs. |
| | Hydrocarbon Blend B | Unacceptable | Flammability is a serious concern. Data have not been submitted to demonstrate it can be used safely in this end-use. |
| CFC-12, R-500 Residential Dehumidifiers (Retrofit and New Equipment/NIKs). | R-405A | Unacceptable | R-405A contains R-c318, a PFC, which has an extremely high GWP and lifetime. Other substitutes exist which do not contain PFCs. |
| | Hydrocarbon Blend B | Unacceptable | Flammability is a serious concern. Data have not been submitted to demonstrate it can be used safely in this end-use. |
| CFC–12 Motor Vehicle Air Conditioners (Retrofit and New Equipment/NIKs). | R–405A | Unacceptable | R–405A contains R–c318, a PFC, which has an extremely high GWP and lifetime. Other Substitutes exist which do not contain PFCs. |
| | Hydrocarbon Blend B | Unacceptable | Flammability is a serious concern. Data have not been submitted to demonstrate it can be used safely in this end-use. |
| | Flammable Substitutes, other than R–152a or HFO–1234yf in new equipment. | Unacceptable | The risks associated with using flammable substitutes (except R–152a and HFO–1234yf) in this end-use have not been addressed by a risk assessment. R–152a and HFO–1234yf may be used in new equipment with the use conditions in appendix B to this subpart. |

SOLVENT CLEANING SECTOR—ACCEPTABLE SUBJECT TO USE CONDITIONS SUBSTITUTES

| Application | Substitute | Decision | Conditions | Comments |
|---|---|---|---|---|
| Electronics Cleaning w/CFC-113, MCF. | HCFC-225 ca/cb | Acceptable | Subject to the company set exposure limit of 25 ppm of the -ca isomer. | HCFC-225 ca/cb blend is offered as a 45%-ca/55%-cb blend. The company set exposure limit of the -ca isomer is 25 ppm. The company set exposure limit of the -cb isomer is 250 ppm. It is the Agency's opinion that with the low emission cold cleaning and vapor degreasing equipment designed for this use, the 25 ppm limit of the HCFC-225 ca isomer can be met. The company is submitting further exposure monitoring data. |

SOLVENT CLEANING SECTOR—ACCEPTABLE SUBJECT TO USE CONDITIONS SUBSTITUTES—Continued

| Application | Substitute | Decision | Conditions | Comments |
|---|---|---|---|---|
| Precision Cleaning w/ CFC-113, MCF. | HCFC-225 ca/cb ..... | Acceptable ..... | Subject to the company set exposure limit of 25 ppm of the -ca isomer. | HCFC-225 ca/cb blend is offered as a 45%-ca/55%-cb blend. The company set exposure limit of the -ca isomer is 25 ppm. The company set exposure limit of the -cb isomer is 250 ppm. It is the Agency's opinion that with the low emission cold cleaning and vapor degreasing equipment designed for this use, the 25 ppm limit of the HCFC-225 ca isomer can be met. The company is submitting further exposure monitoring data. |

SOLVENT CLEANING SECTOR—UNACCEPTABLE SUBSTITUTES

| End use | Substitute | Decision | Comments |
|---|---|---|---|
| Metals cleaning w/CFC-113 .. | Dibromomethane ..... | Unacceptable ..... | High ODP; other alternatives exist. |
| Metals cleaning w/MCF ..... | Dibromomethane ..... | Unacceptable ..... | High ODP; other alternatives exist. |
| Electronics cleaning w/CFC-113. | Dibromomethane ..... | Unacceptable ..... | High ODP; other alternatives exist. |
| Electronics cleaning w/MCF .. | Dibromomethane ..... | Unacceptable ..... | High ODP; other alternatives exist. |
| Precision cleaning w/CFC-113. | Dibromomethane ..... | Unacceptable ..... | High ODP; other alternatives exist. |
| Precision cleaning w/MCF .... | Dibromomethane ..... | Unacceptable ..... | High ODP; other alternatives exist. |

FIRE SUPPRESSION AND EXPLOSION PROTECTION—ACCEPTABLE SUBJECT TO USE CONDITIONS: TOTAL FLOODING AGENTS

| Application | Substitute | Decision | Conditions | Comments |
|---|---|---|---|---|
| Halon 1301 Total Flooding Agents. | Inert Gas/Powdered Aerosol Blend. | Acceptable as a Halon 1301 substitute in normally unoccupied areas. | In areas where personnel could possibly be present, as in a cargo area, EPA requires that the employer shall provide a pre-discharge employee alarm capable of being perceived above ambient light or noise levels for alerting employees before system discharge. The pre-discharge alarm shall provide employees time to safely exit the discharge area prior to system discharge. | The manufacturer's SNAP application requested listing for use in unoccupied areas only.<br>See additional comment 2. |

*Additional Comments*

1—Must conform with OSHA 29 CFR 1910 Subpart L Section 1910.160 of the U.S. Code. You should use clean agents in accordance with the safety guidelines in the latest edition of the NFPA 2001 Standard for Clean Agent Fire Extinguishing Systems.

2—Per OSHA requirements, protective gear (SCBA) must be available in the event personnel must enter/reenter the area.

3—Discharge testing should be strictly limited only to that which is essential to meet safety or performance requirements.

4—The agent should be recovered from the fire protection system in conjunction with testing or servicing, and recycled for later use or destroyed.

FIRE SUPPRESSION AND EXPLOSION PROTECTION—ACCEPTABLE SUBJECT TO NARROWED USE LIMITS: TOTAL FLOODING AGENTS

| End-use | Substitute | Decision | Conditions | Further information |
|---|---|---|---|---|
| Total flooding ... | Sulfurhexafluoride ($SF_6$). | Acceptable subject to narrowed use in limits. | May be used as a discharge test agent in military uses and in civilian aircraft uses only. | This agent has an atmospheric lifetime greater than 1,000 years, with an estimated 100-year, 500-year, and 1,000-year GWP of 16,100, 26,110 and 32,803 respectively. Users should limit testing only to that which is essential to meet safety or performance requirements. This agent is only used to test new Halon 1301 systems. See additional comments 1, 2, 3, 4, 5. |
| Total flooding ... | $CF_3I$ ..... | Acceptable subject to narrowed use limits. | Use only in normally unoccupied areas. | Use of this agent should be in accordance with the safety guidelines in the latest edition of the NFPA 2001 Standard for Clean Agent Fire Extinguishing Systems. Manufacturer has not applied for listing for use in normally occupied areas. Preliminary cardiosensitization data indicates that this agent would not be suitable for use in normally occupied areas. See additional comments 1, 2, 3, 4, 5. |

Additional comments:
1—Must conform with relevant OSHA requirements, including 29 CFR 1910, Subpart L, Sections 1910.160 and 1910.162.
2—Per OSHA requirements, protective gear (SCBA) should be available in the event personnel should reenter the area.
3—Discharge testing should be strictly limited to that which is essential to meet safety or performance requirements.
4—The agent should be recovered from the fire protection system in conjunction with testing or servicing, and recycled for later use or destroyed.
5—EPA has no intention of duplicating or displacing OSHA coverage related to the use of personal protective equipment (e.g., respiratory protection), fire protection, hazard communication, worker training or any other occupational safety and health standard with respect to halon substitutes.

FIRE SUPPRESSION AND EXPLOSION PROTECTION—UNACCEPTABLE SUBSTITUTES

| Application | Substitute | Decision | Comments |
|---|---|---|---|
| Halon 1301 Total Flooding Agents. | HFC-32 ..... | Unacceptable ..... | Data indicate that HFC-32 is flammable and therefore is not suitable as a halon substitute. |

[60 FR 31103, June 13, 1995, as amended at 67 FR 4200, Jan. 29, 2002; 73 FR 33310, June 12, 2008; 76 FR 17519, Mar. 29, 2011]

## APPENDIX C TO SUBPART G OF PART 82—SUBSTITUTES SUBJECT TO USE RESTRICTIONS AND UNACCEPTABLE SUBSTITUTES LISTED IN THE MAY 22, 1996 FINAL RULE, EFFECTIVE JUNE 21, 1996

### REFRIGERATION AND AIR CONDITIONING SECTOR—ACCEPTABLE SUBJECT TO USE CONDITIONS

HCFC Blend Delta and Blend Zeta are acceptable subject to the following conditions when used to retrofit a CFC-12 motor vehicle air conditioning system:

1. Each refrigerant may only be used with a set of fittings that is unique to that refrigerant. These fittings (male or female, as appropriate) must be used with all containers of the refrigerant, on can taps, on recovery, recycling, and charging equipment, and on all air conditioning system service ports. These fittings must be designed to mechanically prevent cross-charging with another refrigerant. A refrigerant may only be used with the fittings and can taps specifically intended for that refrigerant. Using an adapter or deliberately modifying a fitting to use a different refrigerant will be a violation of this use condition. In addition, fittings shall meet the following criteria, derived from Society of Automotive Engineers (SAE) standards and recommended practices:

a. When existing CFC-12 service ports are to be retrofitted, conversion assemblies shall attach to the CFC-12 fitting with a thread lock adhesive and/or a separate mechanical latching mechanism in a manner that permanently prevents the assembly from being removed.

b. All conversion assemblies and new service ports must satisfy the vibration testing requirements of sections 3.2.1 or 3.2.2 of SAE J1660, as applicable, excluding references to

SAE J639 and SAE J2064, which are specific to HFC-134a.

c. In order to prevent discharge of refrigerant to the atmosphere, systems shall have a device to limit compressor operation before the pressure relief device will vent refrigerant. This requirement is waived for systems that do not feature such a pressure relief device.

d. All CFC-12 service ports not retrofitted with conversion assemblies shall be rendered permanently incompatible for use with CFC-12 related service equipment by fitting with a device attached with a thread lock adhesive and/or a separate mechanical latching mechanism in a manner that prevents the device from being removed.

2. When a retrofit is performed, a label must be used as follows:

a. The person conducting the retrofit must apply a label to the air conditioning system in the engine compartment that contains the following information:

i. The name and address of the technician and the company performing the retrofit.

ii. The date of the retrofit.

iii. The trade name, charge amount, and, when applicable, the ASHRAE refrigerant numerical designation of the refrigerant.

iv. The type, manufacturer, and amount of lubricant used.

v. If the refrigerant is or contains an ozone-depleting substance, the phrase ''ozone depleter.''

vi. If the refrigerant displays flammability limits as measured according to ASTM E681, the statement ''This refrigerant is FLAMMABLE. Take appropriate precautions.''

b. This label must be large enough to be easily read and must be permanent.

c. The background color must be unique to the refrigerant.

d. The label must be affixed to the system over information related to the previous refrigerant, in a location not normally replaced during vehicle repair.

e. Information on the previous refrigerant that cannot be covered by the new label must be permanently rendered unreadable.

3. No substitute refrigerant may be used to ''top-off'' a system that uses another refrigerant. The original refrigerant must be recovered in accordance with regulations issued under section 609 of the CAA prior to charging with a substitute.

SOLVENT CLEANING SECTOR—PROPOSED ACCEPTABLE SUBJECT TO USE CONDITIONS SUBSTITUTES

| Application | Substitute | Decision | Conditions | Comments |
|---|---|---|---|---|
| Metals Cleaning with CFC-113, MCF and HCFC-141b. | Monochlorotoluenes and benzotrifluorides. | Acceptable ..... | Subject to a 50 ppm workplace standard for monochlorotoluenes and a 25 ppm standard for benzotrifluorides. | The workplace standard for monochlorotoluenes is based on an OSHA PEL of 50 ppm for orthochlorotoluene. The workplace standard for benzotrifluorides is based on a recent toxicology study. |
| Electronics Cleaning w/ CFC-113, MCF and HCFC-141b. | Monochlorotoluenes and benzotrifluorides. | Acceptable ..... | Subject to a 50 ppm workplace standard for monochlorotoluenes and a 25 ppm standard for benzotrifluorides. | The workplace standard for monochlorotoluenes is based on an OSHA PEL of 50 ppm for orthochlorotoluene. The workplace standard for benzotrifluorides is based on a recent toxicology study. |
| Precision Cleaning w/ CFC-113, MCF and HCFC-141b. | Monochlorotoluenes and benzotrifluorides. | Acceptable ..... | Subject to a 50 ppm workplace standard for monochlorotoluenes and a 25 ppm standard for benzotrifluorides. | The workplace standard for monochlorotoluenes is based on an OSHA PEL of 50 ppm for orthochlorotoluene. The workplace standard for benzotrifluorides is based on a recent toxicology study. |

ACCEPTABLE SUBJECT TO NARROWED USE LIMITS: STREAMING AGENTS

| Application | Substitute | Decision | Comments |
|---|---|---|---|
| Halon 1211 ..... Streaming Agents | $CF_3I$ ..... | Acceptable in non-residential uses only. | |

AEROSOLS—PROPOSED ACCEPTABLE SUBJECT TO USE CONDITIONS SUBSTITUTES

| Application | Substitute | Decision | Conditions | Comments |
|---|---|---|---|---|
| CFC-113, MCF and HCFC-141b as solvent. | Monochlorotoluenes and benzotrifluo-rides. | Acceptable ..... | Subject to a 50 ppm workplace standard for monochlorotoluenes and a 25 ppm standard for benzotrifluorides. | The workplace standard for monochlorotoluenes is based on an OSHA PEL of 50 ppm for orthochlorotoluene. The workplace standard for benzotrifluorides is based on a recent toxicology study. |

ADHESIVES, COATINGS AND INKS—PROPOSED ACCEPTABLE SUBJECT TO USE CONDITIONS SUBSTITUTES

| Application | Substitute | Decision | Conditions | Comments |
|---|---|---|---|---|
| CFC-113, MCF and HCFC-141b. | Monochlorotoluenes and benzotrifluo-rides. | Acceptable ..... | Subject to a 50 ppm workplace standard for monochlorotoluenes and a 25 ppm standard for benzotrifluorides. | The workplace standard for monochlorotoluenes is based on an OSHA PEL of 50 ppm for orthochlorotoluene. The workplace standard for benzotrifluorides is based on a recent toxicology study. |

[61 FR 25592, May 22, 1996, as amended at 67 FR 4201, Jan. 29, 2002]

EFFECTIVE DATE NOTE: At 61 FR 25592, May 22, 1996, Appendix C to Part 82 Subpart G was added. This appendix contains information collection and recordkeeping requirements which will not become effective until approval has been given by the Office of Management and Budget.

## APPENDIX D TO SUBPART G OF PART 82—SUBSTITUTES SUBJECT TO USE RESTRICTIONS AND UNACCEPTABLE SUBSTITUTES

*Summary of Decisions*

Refrigeration and Air Conditioning Sector Acceptable Subject to Use Conditions

R-406A/''GHG''/''McCool'', ''GHG-HP'', ''GHG-X4''/''Autofrost''/''Chill-It'', and ''Hot Shot''/''Kar Kool'' are acceptable substitutes for CFC-12 in retrofitted motor vehicle air conditioning systems (MVACs) subject to the use condition that a retrofit to these refrigerants must include replacing non-barrier hoses with barrier hoses.

For all refrigerants submitted for use in motor vehicle air conditioning systems, subsequent to the effective date of this FRM, in addition to the information previously required in the March 18, 1994 final SNAP rule (58 FR 13044), SNAP submissions must include specifications for the fittings similar to those found in SAE J639, samples of all fittings, and the detailed label described below at the same time as the initial SNAP submission, or the submission will be considered incomplete. Under section 612 of the Clean Air Act, substitutes for which submissions are incomplete may not be sold or used, regardless of other acceptability determinations, and the prohibition against sale of a new refrigerant will not end until 90 days after EPA determines the submission is complete.

In addition, the use of a) R-406A/''GHG''/''McCool'', ''GHG-HP'', ''GHG-X4/''Autofrost''/''Chill-It'', ''Hot Shot''/''Kar Kool'', and ''FREEZE 12'' as CFC-12 substitutes in MVACs, and b) all refrigerants submitted for, and listed in, subsequent Notices of Acceptability as substitutes for CFC-12 in MVACs, must meet the following conditions:

1. Each refrigerant may only be used with a set of fittings that is unique to that refrigerant. These fittings (male or female, as appropriate) must be designed by the manufacturer of the refrigerant. The manufacturer is responsible to ensure that the fittings meet all of the requirements listed below, including testing according to SAE standards. These fittings must be designed to mechanically prevent cross-charging with another refrigerant, including CFC-12.

The fittings must be used on all containers of the refrigerant, on can taps, on recovery, recycling, and charging equipment, and on all air conditioning system service ports. A refrigerant may only be used with the fittings and can taps specifically intended for that refrigerant and designed by the manufacturer of the refrigerant. Using a refrigerant with a fitting designed by anyone else, even if it is different from fittings used with other refrigerants, is a violation of this use condition. Using an adapter or deliberately

modifying a fitting to use a different refrigerant is a violation of this use condition.

Fittings shall meet the following criteria, derived from Society of Automotive Engineers (SAE) standards and recommended practices:

a. When existing CFC-12 service ports are retrofitted, conversion assemblies shall attach to the CFC-12 fitting with a thread lock adhesive and/or a separate mechanical latching mechanism in a manner that permanently prevents the assembly from being removed.

b. All conversion assemblies and new service ports must satisfy the vibration testing requirements of section 3.2.1 or 3.2.2 of SAE J1660, as applicable, excluding references to SAE J639 and SAE J2064, which are specific to HFC-134a.

c. In order to prevent discharge of refrigerant to the atmosphere, systems shall have a device to limit compressor operation before the pressure relief device will vent refrigerant.

d. All CFC-12 service ports not retrofitted with conversion assemblies shall be rendered permanently incompatible for use with CFC-12 related service equipment by fitting with a device attached with a thread lock adhesive and/or a separate mechanical latching mechanism in a manner that prevents the device from being removed.

2. When a retrofit is performed, a label must be used as follows:

a. The person conducting the retrofit must apply a label to the air conditioning system in the engine compartment that contains the following information:

i. The name and address of the technician and the company performing the retrofit.

ii. The date of the retrofit.

iii. The trade name, charge amount, and, when applicable, the ASHRAE refrigerant numerical designation of the refrigerant.

iv. The type, manufacturer, and amount of lubricant used.

v. If the refrigerant is or contains an ozone-depleting substance, the phrase ''ozone depleter''.

vi. If the refrigerant displays flammability limits as measured according to ASTM E681, the statement ''This refrigerant is FLAMMABLE. Take appropriate precautions.''

b. The label must be large enough to be easily read and must be permanent.

c. The background color must be unique to the refrigerant.

d. The label must be affixed to the system over information related to the previous refrigerant, in a location not normally replaced during vehicle repair.

e. In accordance with SAE J639, testing of labels must meet ANSI/UL 969–1991.

f. Information on the previous refrigerant that cannot be covered by the new label must be rendered permanently unreadable.

3. No substitute refrigerant may be used to ''top-off'' a system that uses another refrigerant. The original refrigerant must be recovered in accordance with regulations issued under section 609 of the CAA prior to charging with a substitute.

SOLVENT CLEANING SECTOR

[Acceptable Subject to Use Conditions Substitutes]

| Application | Substitute | Decision | Conditions | Comments |
|---|---|---|---|---|
| Electronics Cleaning w/CFC-113 and MCF. | HFC-4310mee | Acceptable | Subject to a 200 ppm time-weighted average workplace exposure standard and a 400 ppm workplace exposure ceiling. | |
| Precision Cleaning w/CFC-113 and MCF. | HFC-4310mee | Acceptable | Subject to a 200 ppm time-weighted average workplace exposure standard and a 400 ppm workplace exposure ceiling. | |

SOLVENT SECTOR

[Acceptable Subject to Narrowed Use Limits]

| Application | Substitute | Decision | Comments |
|---|---|---|---|
| Electronics Cleaning w/CFC-113 and MCF | Perfluoropolyethers | Perfluoropolyethers are acceptable substitutes for CFC-113 and MCF in the precision cleaning sector for high performance, precision-engineered applications only where reasonable efforts have been made to ascertain that other alternatives are not technically feasible due to performance or safety requirements. | PFPEs have similar global warming profile to the PFCs, and the SNAP decision on PFPEs parallels that for PFCs. |
| Precision Cleaning w/CFC-113 and MCF | Perfluoropolyethers | Perfluoropolyethers are acceptable substitutes for CFC-113 and MCF in the precision cleaning sector for high performance, precision-engineered applications only where reasonable efforts have been made to ascertain that other alternatives are not technically feasible due to performance or safety requirements. | PFPEs have similar global warming profile to the PFCs, and the SNAP decision on PFPEs parallels that for PFCs. |

Unacceptable Substitutes

| End-use | Substitute | Decision | Comments |
|---|---|---|---|
| Electronics Cleaning w/CFC-113 and MCF | HCFC-141b | Extension of existing unacceptability determination to grant existing uses in high-performance electronics permission to continue until January 1, 1997. | This determination extends the use date for HCFC-141b in solvent cleaning, but only for existing users in high-performance electronics and only for one year. |
| Precision Cleaning w/CFC-113 and MCF | HCFC-141b | Extension of existing unacceptability determination to grant existing uses in precision cleaning permission to continue until January 1, 1997. | This determination extends the use date for HCFC-141b in solvent cleaning, but only for existing users in precision cleaning and only for one year. |

AEROSOLS SECTOR

Acceptable Subject to Narrowed Use Limits

| Application | Substitute | Decision | Comments |
|---|---|---|---|
| CFC-113, MCF, and HCFC-141b as aerosol solvents. | Perfluorocarbons | Perfluorocarbons are acceptable substitutes for aerosol applications only where reasonable efforts have been made to ascertain that other alternatives are not technically feasible due to performance or safety requirements. | PFCs have extremely long atmospheric lifetimes and high Global Warming Potentials. This decision reflects these concerns and is patterned after the SNAP decision on PFCs in the solvent cleaning sector. |
| | Perfluoropolyethers | Perfluorocarbons are acceptable substitutes for aerosol applications only where reasonable efforts have been made to ascertain that other alternatives are not technically feasible due to performance or safety requirements. | PFPEs have similar global warming profile to the PFCs, and the SNAP decision on PFPEs parallels that for PFCs in the solvent cleaning sector. |

Unacceptable Substitutes

| End-use | Substitute | Decision | Comments |
|---|---|---|---|
| CFC-11, CFC-12, HCFC-22, and HCFC-142b as aerosol propellants. | SF6 | Unacceptable | SF6 has the highest GWP of all industrial gases, and other compressed gases meet user needs in this application equally well. |

[61 FR 54040, Oct. 16, 1996]

## APPENDIX E TO SUBPART G OF PART 82—UNACCEPTABLE SUBSTITUTES LISTED IN THE JANUARY 26, 1999 FINAL RULE, EFFECTIVE JANUARY 26, 1999

REFRIGERATION AND AIR-CONDITIONING SECTOR UNACCEPTABLE SUBSTITUTES

| End-use | Substitute | Decision | Comments |
|---|---|---|---|
| All refrigeration and air-conditioning end uses ..... | MT–31 | Unacceptable ..... | Chemical contained in this blend presents unacceptable toxicity risk. |

[64 FR 3865, Jan. 26, 1999]

## APPENDIX F TO SUBPART G OF PART 82—UNACCEPTABLE SUBSTITUTES LISTED IN THE JANUARY 26, 1999 FINAL RULE, EFFECTIVE JANUARY 26, 1999

REFRIGERATION AND AIR-CONDITIONING SECTOR UNACCEPTABLE SUBSTITUTES

| End-use | Substitute | Decision | Comments |
|---|---|---|---|
| All refrigeration and air-conditioning end uses. | Hexafluoropropylene (HFP) and all HFP-containing blends. | Unacceptable ..... | Presents unacceptable toxicity risk. |

[64 FR 3868, Jan. 26, 1999]

## APPENDIX G TO SUBPART G OF PART 82—SUBSTITUTES SUBJECT TO USE RESTRICTIONS AND UNACCEPTABLE SUBSTITUTES LISTED IN THE MARCH 3, 1999, FINAL RULE, EFFECTIVE APRIL 2, 1999.

REFRIGERANTS UNACCEPTABLE SUBSTITUTES

| End-use | Substitute | Decision | Comments |
|---|---|---|---|
| CFC-12, R-502, and HCFC-22 Household Refrigeration, Transport Refrigeration, Vending Machines, Cold Storage Warehouses, and Retail Food Refrigeration, Retrofit and New. | Self-Chilling Cans-Using HFC-134a or HFC-152a. | Unacceptable ..... | Unacceptably high greenhouse gas emissions from direct release of refrigerant to the atmosphere. |

[64 FR 10378, Mar. 3, 1999]

## APPENDIX H TO SUBPART G OF PART 82—SUBSTITUTES SUBJECT TO USE RESTRICTIONS AND UNACCEPTABLE SUBSTITUTES, EFFECTIVE MAY 28, 1999

*CFC-12 Automobile and Non-automobile Motor Vehicle Air Conditioners, Retrofit and New*

### Criteria for Uniqueness of Fittings

(a) All fittings for alternative motor vehicle refrigerants must meet the following requirements:

(1) High-side screw-on fittings for each refrigerant must differ from high-side screw-on fittings for all other refrigerants, including CFC-12, and from low-side screw-on fittings for CFC-12;

(2) Low-side screw-on fittings for each refrigerant must differ from low-side screw-on fittings for all other refrigerants, including CFC-12;

(3) High-side screw-on fittings for a given refrigerant must differ from low-side screw-on fittings for that refrigerant, to protect against connecting a low-pressure system to a high-pressure one;

(4) High-side quick-connect fittings for each refrigerant must differ from high-side quick-connect fittings for all other refrigerants, including CFC-12 (if they exist);

(5) Low-side quick-connect fittings for each refrigerant must differ from low-side quick-connect fittings for all other refrigerants, including CFC-12 (if they exist);

(6) High-side quick-connect fittings for a given refrigerant must differ from low-side quick-connect fittings for that refrigerant, to protect against connecting a low-pressure system to a high-pressure one;

(7) For each type of container, the fitting for each refrigerant must differ from the fitting for that type of container for all other refrigerants, including CFC-12.

(b) For screw-on fittings, ''differ'' means that either the diameter must differ by at least 1/16 inch or the thread direction must be reversed (i.e. right-handed vs. left-handed). Simply changing the thread pitch is not sufficient. For quick-connect fittings, ''differ''

means that a person using normal force and normal tools (including wrenches) must not be able to cross-connect fittings.

(c) The sole exception to the 1/16 inch difference requirement is the difference between the small can fittings for GHG-X4 and R-406A. The GHG-X4 small can fitting uses a metric measurement, and is slightly less than 1/16 inch larger than the small can fitting for R-406A. EPA has concluded that these fittings will not cross-connect, and therefore they may be used.

REFRIGERATION AND AIR CONDITIONING—UNACCEPTABLE SUBSTITUTES

| End-use | Substitute | Decision | Comments |
|---|---|---|---|
| All HCFC-22 end-uses, retrofit and new | NARM–22 | Unacceptable | This blend contains HCFC-22, and it is inappropriate to use such a blend as a substitute for HCFC-22. In addition, this blend contains HFC-23, which has an extremely high GWP and lifetime. Other substitutes for HCFC-22 exist that do not contain either HCFC-22 or HFC-23. |

SOLVENTS CLEANING—UNACCEPTABLE SUBSTITUTES

| End-use | Substitute | Decision | Comments |
|---|---|---|---|
| Metals, Electronic, and Precision cleaning with CFC-113, methyl chloroform, and HCFC-141b. | Chlorobromo-methane | Unacceptable | Other alternatives exist with zero or much lower ODP. |

FIRE SUPPRESSION AND EXPLOSION PROTECTION—ACCEPTABLE SUBJECT TO NARROWED USE LIMITS: TOTAL FLOODING AGENTS

| End-use | Substitute | Decision | Conditions | Further information |
|---|---|---|---|---|
| Total flooding | HFC-236fa | Acceptable subject to narrowed use limits. | Acceptable when manufactured using any process that does not convert perfluoroisobutylene (PFIB) directly to HFC-236fa in a single step:<br>for use in explosion suppression and explosion inertion applications, and<br>for use in fire suppression applications where other non-PFC agents or alternatives are not technically feasible due to performance or safety requirements:<br>(a) because of their physical or chemical properties, or<br>(b) where human exposure to the extinguishing agents may result in failure to meet safety guidelines in the latest edition of the NFPA 2001 Standard for Clean Agent Fire Extinguishing Systems. | Use of this agent should be in accordance with the safety guidelines in the latest edition of the NFPA 2001 Standard for Clean Agent Fire Systems.<br>Users should observe the limitations on HFC-236fa acceptability by taking the following measures:<br>(i) conduct an evaluation of foreseeable conditions of end-use;<br>(ii) determine that the physical or chemical properties, or other technical constraints of the other available agents preclude their use; and<br>(iii) determine that human exposure to the other alternative extinguishing agents may result in failure to meet safety guidelines in the latest edition of the NFPA 2001 Standard for Clean Agent Fire Extinguishing Systems.<br>Documentation of such measures should be available for review upon request.<br>The principal environmental characteristic of concern for HFC-236fa is its high GWP of 9400 and long atmospheric lifetime of 226 years. Actual contributions to global warming depend upon the quantities emitted.<br>See additional comments 1, 2, 3, 4, 5. |

| | | | | |
|---|---|---|---|---|
| Total flooding ..... | $C_3F_8$ | Acceptable subject to narrowed use limits. | Acceptable for nonresidential uses where other alternatives are not technically feasible due to performance or safety requirements:<br>(a) because of their physical or chemical properties, or<br>(b) where human exposure to the extinguishing agents may result in failure to meet safety guidelines in the latest edition of the NFPA 2001 Standard for Clean Agent Fire Extinguishing Systems. | Use of this agent should be in accordance with the safety guidelines in the latest edition of the NFPA 2001 Standard for Clean Agent Fire Extinguishing Systems.<br>Users should observe the limitations on PFC acceptability by taking the following measures:<br>(i) conduct an evaluation of foreseeable conditions of end-use;<br>(ii) determine that the physical or chemical properties or other technical constraints of the other available agents preclude their use; and<br>(iii) determine that human exposure to the other alternative extinguishing agents may result in failure to meet safety guidelines in the latest edition of the NFPA 2001 Standard for Clean Agent Fire Extinguishing Systems.<br>Documentation of such measures should be available for review upon request.<br>The principal environmental characteristic of concern for PFCs is that they have high GWPs and long atmospheric lifetimes. Actual contributions to global warming depend upon the quantities of PFCs emitted.<br>See additional comments 1, 2, 3, 4, 5. |
| Total flooding ..... | $C_4F_{10}$ | Acceptable subject to narrowed use limits | Acceptable for nonresidential uses where other alternatives are not technically feasible due to performance or safety requirements:<br>(a) because of their physical or chemical properties, or<br>(b) where human exposure to the extinguishing agents may result in failure to meet safety guidelinesin the latest edition of the NFPA 2001 Standard for Clean Agent Fire Extinguishing Systems | Use of this agent should be in accordance with the safety guidelines in the latest edition of the NFPA 2001 Standard for Clean Agent Fire Extinguishing Systems.<br>Users should observe the limitations on PFC acceptability by taking the following measures:<br>(i) conduct an evaluation of foreseeable conditions of end-use;<br>(ii) determine that the physical or chemical properties or other technical constraints of the other available agents preclude their use; and<br>(iii) determine that human exposure to the other alternative extinguishing agents may result in failure to meet safety guidelines in the latest edition of the NFPA 2001 Standard for Clean Agent Fire Extinguishing Systems<br>Documentation of such measures should be available for review upon request.<br>The principal environmental characteristic of concern for PFCs is that they have high GWPs and long atmospheric lifetimes. Actual contributions to global warming depend upon the quantities of PFCs emitted.<br>See additional comments 1, 2, 3, 4, 5. |

Additional comments:

1—Should conform with relevant OSHA requirements, including 29 CFR 1910, Subpart L, Sections 1910.160 and 1910.162.
2—Per OSHA requirements, protective gear (SCBA) should be available in the event personnel should reenter the area.
3—Discharge testing should be strictly limited to that which is essential to meet safety or performance requirements.
4—The agent should be recovered from the fire protection system in conjunction with testing or servicing, and recycled for later use or destroyed.
5—EPA has no intention of duplicating or displacing OSHA coverage related to the use of personal protective equipment (e.g., respiratory protection), fire protection, hazard communication, worker training or any other occupational safety and health standard with respect to halon substitutes.

FIRE SUPPRESSION AND EXPLOSION PROTECTION—STREAMING AGENTS—ACCEPTABLE SUBJECT TO NARROWED USE LIMITS

| End-use | Substitute | Decision | Conditions | Comments |
|---|---|---|---|---|
| Halon 1211 ..... replacement ..... | C6F14 | Acceptable for nonresidential uses where other alternatives are not technically feasible due to performance or safety requirements: (a) because of their physical or chemical properties, or (b) where human exposure to the extinguishing agents may result in failure to meet applicable use conditions. | | Users should observe the limitations on PFC acceptability by taking the following measures: (i) conduct an evaluation of foreseeable conditions of end-use; (ii) determine that the physical or chemical properties or other technical constraints of the other available agents preclude their use; and (iii) determine that human exposure to the other alternative extinguishing agents may result in failure to meet applicable use conditions Documentation of such measures should be available for review upon request. The principal environmental characteristic of concern for PFCs is that they have high GWPs and long atmospheric lifetimes. Actual contributions to global warming depend upon the quantities of PFCs emitted. For additional guidance regarding applications in which PFCs may be appropriate, users should consult the description of potential uses which is included in the March 18, 1994 Final Rule (59 FR 13044.) See comments 1, 2. |
| Halon 1211 replacement. | HFC-236fa | Acceptable in nonresidential uses when manufactured using any process that does not convert perfluoroisobutylene (PFIB) directly to HFC-236fa in a single step | | See comments 1, 2, 3. |
| Halon 1211 replacement. | HFC-227ea | Acceptable in nonresidential uses only | | See comments 1, 2. |
| Additional comments: | | | | |

1—Discharge testing and training should be strictly limited only to that which is essential to meet safety or performance requirements.
2—The agent should be recovered from the fire protection system in conjunction with testing or servicing, and recycled for later use or destroyed.
3—Acceptable for local application systems inside textile process machinery.

FIRE SUPPRESSION AND EXPLOSION PROTECTION—TOTAL FLOODING AGENTS—UNACCEPTABLE SUBSTITUTES

| End-use | Substitute | Decision | Comments |
|---|---|---|---|
| Halon 1301 replacement | Chlorobromo-methane | Unacceptable | Other alternatives exist with zero or lower ODP; OSHA regulations prohibit its use as extinguishing agent in fixed extinguishing systems where employees may be exposed. See 29 CFR 1910.160(b)(11). |

AEROSOLS—UNACCEPTABLE SUBSTITUTES

| End-use | Substitute | Decision | Comments |
|---|---|---|---|
| Solvent in aerosols with CFC-113, MCF, or HCFC-141b. | Chlorobromo-methane | Unacceptable | Other alternatives exist with zero or much lower ODP. |

ADHESIVES, COATINGS, AND INKS—UNACCEPTABLE SUBSTITUTES

| End-use | Substitute | Decision | Comments |
|---|---|---|---|
| Solvent in adhesives, coatings, and inks with CFC-113. | Chlorobromo-methane | Unacceptable | Other alternatives exist with zero or much lower ODP. |
| Solvent in adhesives, coatings, and inks with MCF. | Chlorobromo-methane | Unacceptable | Other alternatives exist with zero or much lower ODP. |
| Solvent in adhesives, coatings and inks with HCFC-141b. | Chlorobromo-methane | Unacceptable | Other alternatives exist with zero or much lower ODP. |

[64 FR 22996, Apr. 28, 1999, as amended at 67 FR 4201, Jan. 29, 2002]

## APPENDIX I TO SUBPART G OF PART 82—SUBSTITUTES SUBJECT TO USE RESTRICTIONS, LISTED IN THE APRIL 26, 2000, FINAL RULE, EFFECTIVE MAY 26, 2000

### FIRE SUPPRESSION AND EXPLOSION PROTECTION—STREAMING AGENTS

[Substitutes Acceptable Subject to Narrowed Use Limits]

| End Use | Substitute | Decision | Limitations | Comments |
|---|---|---|---|---|
| Halon 1211 Streaming Agents ... | HCFC Blend E ..... | Acceptable ..... | Nonresidential uses only. | As with other streaming agents, EPA recommends that potential risks of combustion by-products be labeled on the extinguisher (see UL 2129). See additional comments 1, 2. |

*Additional Comments:*

1. Discharge testing and training should be strictly limited only to that which is essential to meet safety or performance requirements.
2. The agent should be recovered from the fire protection system in conjunction with testing or servicing, and recycled for later use or destroyed.

[65 FR 24392, Apr. 26, 2000, as amended at 67 FR 4202, Jan. 29, 2002]

## APPENDIX J TO SUBPART G OF PART 82—SUBSTITUTES LISTED IN THE JANUARY 29, 2002 FINAL RULE, EFFECTIVE APRIL 1, 2002

### FIRE SUPPRESSION AND EXPLOSION PROTECTION SECTION—TOTAL FLOODING SUBSTITUTES—ACCEPTABLE SUBJECT TO NARROWED USE LIMITS

| End-use | Substitute | Decision | Conditions | Further information |
|---|---|---|---|---|
| Total flooding ..... | HFC Blend B (Halotron II®) ... | Acceptable subject to narrowed use limits. | Acceptable in areas that are not normally occupied only. | See additional comments 1, 2, 3, 4, 5. |

Additional comments:
1—Should conform to relevant OSHA requirements, including 29 CFR 1910, subpart L, Sections 1910.160 and 1910.162.
2—Per OSHA requirements, protective gear (SCBA) should be available in the event personnel should reenter the area.
3—Discharge testing should be strictly limited to that which is essential to meet safety or performance requirements.
4—The agent should be recovered from the fire protection system in conjunction with testing or servicing, and recycled for later use or destroyed.
5—EPA has no intention of duplicating or displacing OSHA coverage related to the use of personal protective equipment (e.g., respiratory protection), fire protection, hazard communication, worker training or any other occupational safety and health standard with respect to halon substitutes.

### FIRE SUPPRESSION AND EXPLOSION PROTECTION SECTOR—TOTAL FLOODING SUBSTITUTES—UNACCEPTABLE SUBSTITUTES

| End-Use | Substitute | Decision | Further Information |
|---|---|---|---|
| Halon 1301 ..... | HBFC–22B1 ..... | Unacceptable ..... | HBFC–22B1 is a Class I ozone depleting substance with an ozone depletion potential of 0.74. |
| Total Flooding Agents ..... | ..... | ..... | The manufacturer of this agent terminated production of this agent January 1, 1996, except for critical uses, and removed it from the market because it is a fetal toxin. |

[67 FR 4202, Jan. 29, 2002, as amended at 71 FR 56367, Sept. 27, 2006]

## APPENDIX K TO SUBPART G OF PART 82—SUBSTITUTES SUBJECT TO USE RESTRICTIONS AND UNACCEPTABLE SUBSTITUTES LISTED IN THE JULY 22, 2002, FINAL RULE, EFFECTIVE AUGUST 21, 2002

### FOAM BLOWING—UNACCEPTABLE SUBSTITUTES

| End-use | Substitute | Decision | Comments |
|---|---|---|---|
| Replacements for HCFC-141b in the following rigid polyurethane/polyisocyanurate applications:<br>—Boardstock<br>—Appliance<br>—Spray | HCFC-22, HCFC-142b and blends thereof. | Unacceptable ..... | Alternatives exist with lower or zero-ODP. |
| All foam end-uses ..... | HCFC-124 ..... | Unacceptable ..... | Alternatives exist with lower or zero-ODP. |

[67 FR 47721, July 22, 2002, as amended at 72 FR 14443, Mar. 28, 2007]

## APPENDIX L TO SUBPART G OF PART 82—SUBSTITUTES LISTED IN THE JANUARY 27, 2003, FINAL RULE, EFFECTIVE MARCH 28, 2003

### FIRE SUPPRESSION AND EXPLOSION PROTECTION SECTOR—TOTAL FLOODING SUBSTITUTES—ACCEPTABLE SUBJECT TO USE CONDITIONS

| End-use | Substitute | Decision | Conditions | Comments |
|---|---|---|---|---|
| Total flooding ..... | HFC227–BC | Acceptable subject to use conditions. | Sodium bicarbonate release in all settings should be targeted so that increased pH level would not adversely affect exposed individuals. Users should provide special training to individuals required to be in environments protected by HFC227–BC extinguishing systems.<br>Each HFC227–BC extinguisher should be clearly labelled with the potential hazards from use and safe handling procedures. | Use of the agent, HFC-227ea, should be in accordance with the safety guidelines in the latest edition of the NFPA 2001 Standard for Clean Agent Fire Extinguishing Systems.<br>*See* additional comments 1, 2, 3, 4, 5. |

Additional comments.

1—Should conform with relevant OSHA requirements, including 29 CFR part 1910, subpart L, sections 1910.160 and 1910.162.

2—Per OSHA requirements, protective gear (SCBA) should be available in the event personnel should reenter the area.

3—Discharge testing should be strictly limited to that which is essential to meet safety or performance requirements.

4—The agent should be recovered from the fire protection system in conjunction with testing or servicing, and recycled for later use or destroyed.

5—EPA has no intention of duplicating or displacing OSHA coverage related to the use of personal protective equipment (*e.g.,* respiratory protection), fire protection, hazard communication, worker training or any other occupational safety and health standard with respect to halon substitutes.

FIRE SUPPRESSION AND EXPLOSION PROTECTION SECTOR—STREAMING AGENTS—ACCEPTABLE SUBJECT TO NARROWED USE LIMITS

| End-use | Substitute | Decision | Conditions | Comments |
|---|---|---|---|---|
| Streaming ..... | C6-perfluoroketone (FK-5-1-12MYY2). | Acceptable subject to narrowed use limits. | For use only in non-residential areas. | For operations that fill canisters to be used in streaming applications, EPA recommends the following:<br>—Adequate ventilation should be in place;<br>—All spills should be cleaned up immediately in accordance with good industrial hygiene practices; and<br>—Training for safe handling procedures should be provided to all employees that would be likely to handle containers of the agent or extinguishing units filled with the agent.<br>*See* additional comments 1, 2, 3, 4. |
| Streaming ..... | H Galden HFPEs ..... | Acceptable subject to narrowed use limits. | For use only in non-residential areas. | For operations that fill canisters to be used in streaming applications, EPA recommends the following:<br>—Adequate ventialtion should be in place;<br>—All spills should be cleaned up immediately in accordance with good industrial hygiene practices; and<br>—Training for safe handling procedures should be provided to all employees that would be likely to handle containers of the agent or extinguishing units filled with the agent.<br>*See* additional comments 1, 2, 3, 4. |

Additional comments.

1—Discharge testing should be strictly limited to that which is essential to meet safety or performance requirements.

2—The agent should be recovered from the fire protection system in conjunction with testing or servicing, and recycled for later use or destroyed.

3—EPA has no intention of duplicating or displacing OSHA coverage related to the use of personal protective equipment (*e.g.,* respiratory protection), fire protection, hazard communication, worker training or any other occupational safety and health standard with respect to halon substitutes.

4—As with other streaming agents, EPA recommends that potential risks of combustion by-products be labelled on the extinguisher (*see* UL 2129)

[68 FR 4010, Jan. 27, 2003]

## APPENDIX M TO SUBPART G—UNACCEPTABLE SUBSTITUTES LISTED IN THE SEPTEMBER 30, 2004 FINAL RULE, EFFECTIVE NOVEMBER 29, 2004

### FOAM BLOWING—UNACCEPTABLE SUBSTITUTES

| End-use | Substitute | Decision | Comments |
|---|---|---|---|
| **All foam end-uses:**<br>—Rigid polyurethane and polyisocyanurate laminated boardstock<br>—Rigid polyurethane appliance<br>—Rigid polyurethane spray and commercial refrigeration, and sandwich panels<br>—Rigid polyurethane slabstock and other foams<br>—Polystyrene extruded insulation boardstock and billet<br>—Phenolic insulation board and bunstock<br>—Flexible polyurethane<br>—Polystyrene extruded sheet<br>**Except for:** [1]<br>—Space vehicle<br>—Nuclear<br>—Defense<br>—Research and development for foreign customers | HCFC–141b ..... | Unacceptable ..... | Alternatives exist with lower or zero = ODP. |

[1] Exemptions for specific applications are identified in the list of acceptable substitutes.

[69 FR 58279, Sept. 30, 2004]

APPENDIX N TO SUBPART G OF PART 82 [RESERVED]

## APPENDIX O TO SUBPART G OF PART 82—SUBSTITUTES LISTED IN THE SEPTEMBER 27, 2006 FINAL RULE, EFFECTIVE NOVEMBER 27, 2006

### FIRE SUPPRESSION AND EXPLOSION PROTECTION SECTOR—TOTAL FLOODING SUBSTITUTES—ACCEPTABLE SUBJECT TO USE CONDITIONS

| End-use | Substitute | Decision | Conditions | Further information |
|---|---|---|---|---|
| Total flooding ..... | Gelled Halocarbon/Dry Chemical Suspension (Envirogel) with sodium bicarbonate additive. | Acceptable subject to use conditions. | Use of whichever hydrofluorocarbon gas (HFC–125, HFC–227ea, or HFC–236fa) is employed in the formulation must be in accordance with all requirements for acceptability (i.e., narrowed use limits) of that HFC under EPA's SNAP program. | Use of this agent should be in accordance with the safety guidelines in the latest edition of the NFPA 2001 Standard for Clean Agent Fire Extinguishing Systems, for whichever hydrofluorocarbon gas is employed, and the latest edition of the NFPA 2010 standard for Aerosol Extinguishing Systems.<br>Sodium bicarbonate release in all settings should be targeted so that increased blood pH level would not adversely affect exposed individuals.<br>Users should provide special training, including the potential hazards associated with the use of the HFC agent and sodium bicarbonate, to individuals required to be in environments protected by Envirogel with sodium bicarbonate additive extinguishing systems.<br>Each extinguisher should be clearly labeled with the potential hazards from use and safe handling procedures.<br>See additional comments 1, 2, 3, 4, 5 |

FIRE SUPPRESSION AND EXPLOSION PROTECTION SECTOR—TOTAL FLOODING SUBSTITUTES—ACCEPTABLE SUBJECT TO USE CONDITIONS—Continued

| End-use | Substitute | Decision | Conditions | Further information |
|---|---|---|---|---|
| Total flooding ..... | Powdered Aerosol D (Aero-K®, Stat-X®). | Acceptable subject to use conditions. | For use only in normally unoccupied areas. | Use of this agent should be in accordance with the safety guidelines in the latest edition of the NFPA 2010 standard for Aerosol Extinguishing Systems.<br>For establishments manufacturing the agent or filling, installing, or servicing containers or systems to be used in total flooding applications, EPA recommends the following:<br>—Adequate ventilation should be in place to reduce airborne exposure to constituents of agent;<br>—An eye wash fountain and quick drench facility should be close to the production area;<br>—Training for safe handling procedures should be provided to all employees that would be likely to handle containers of the agent or extinguishing units filled with the agent;<br>—Workers responsible for clean up should allow for maximum settling of all particulates before reentering area and wear appropriate protective equipment; and<br>—All spills should be cleaned up immediately in accordance with good industrial hygiene practices.<br>See additional comments 1, 2, 3, 4, 5. |

FIRE SUPPRESSION AND EXPLOSION PROTECTION SECTOR—TOTAL FLOODING SUBSTITUTES—ACCEPTABLE SUBJECT TO USE CONDITIONS—Continued

| End-use | Substitute | Decision | Conditions | Further information |
|---|---|---|---|---|
| Total flooding ..... | Powdered Aerosol E (FirePro®). | Acceptable subject to use conditions. | For use only in normally unoccupied areas. | Use of this agent should be in accordance with the safety guidelines in the latest edition of the NFPA 2010 standard for Aerosol Extinguishing Systems.<br>For establishments manufacturing the agent or filling, installing, or servicing containers or systems to be used in total flooding applications, EPA recommends the following:<br>—Adequate ventilation should be in place to reduce airborne exposure to constituents of agent;<br>—An eye wash fountain and quick drench facility should be close to the production area;<br>—Training for safe handling procedures should be provided to all employees that would be likely to handle containers of the agent or extinguishing units filled with the agent;<br>—Workers responsible for clean up should allow for maximum settling of all particulates before reentering area and wear appropriate protective equipment; and<br>—All spills should be cleaned up immediately in accordance with good industrial hygiene practices.<br>See additional comments 1, 2, 3, 4, 5. |
| Total flooding ..... | Phosphorous Tribromide ($PBr_3$). | Acceptable subject to use conditions. | For use only in aircraft engine nacelles. | For establishments manufacturing the agent or filling, installing, or servicing containers or systems, EPA recommends the following:<br>—Adequate ventilation should be in place and/or positive pressure, self-contained breathing apparatus (SCBA) should be worn;<br>—Training for safe handling procedures should be provided to all employees that would be likely to handle containers of the agent or extinguishing units filled with the agent; and<br>—All spills should be cleaned up immediately in accordance with good industrial hygiene practices.<br>See additional comments 1, 2, 3, 4, 5. |

Additional comments:

1—Should conform to relevant OSHA requirements, including 29 CFR 1910, subpart L, Sections 1910.160 and 1910.162.

2—Per OSHA requirements, protective gear (SCBA) should be available in the event personnel should reenter the area.

3—Discharge testing should be strictly limited to that which is essential to meet safety or performance requirements.

4—The agent should be recovered from the fire protection system in conjunction with testing or servicing, and recycled for later use or destroyed.

5—EPA has no intention of duplicating or displacing OSHA coverage related to the use of personal protective equipment (e.g., respiratory protection), fire protection, hazard communication, worker training or any other occupational safety and health standard with respect to halon substitutes.

[71 FR 56367, Sept. 27, 2006]

## APPENDIX P TO SUBPART G OF PART 82—SUBSTITUTES LISTED IN THE SEPTEMBER 27, 2006 FINAL RULE, EFFECTIVE NOVEMBER 27, 2006

### FIRE SUPPRESSION AND EXPLOSION PROTECTION SECTOR—TOTAL FLOODING AGENTS—ACCEPTABLE SUBJECT TO NARROWED USE LIMITS

| End-use | Substitute | Decision | Conditions | Further information |
|---|---|---|---|---|
| Total flooding ..... | Gelled Halocarbon/Dry Chemical Suspension with any agent other than ammonium polyphosphate or sodium bicarbonate additive (Envirogel with sodium bicarbonate additive). | Acceptable subject to narrowed use limits. | For use only in normally unoccupied areas. | Use of this agent should be in accordance with the safety guidelines in the latest edition of the NFPA 2001 Standard for Clean Agent Fire Extinguishing Systems, for whichever hydrofluorocarbon gas is employed.<br>Envirogel is listed as a streaming substitute under the generic name Gelled Halocarbon/Dry Chemical Suspension. Envirogel was also previously listed as a total flooding substitute under the same generic name.<br>EPA has found Envirogel with the ammonium polyphosphate additive and Envirogel with the sodium bicarbonate additive to be acceptable as total flooding agents in both occupied and unoccupied areas.<br>See additional comments 1, 2, 3, 4, 5 |

Additional comments:
1—Should conform to relevant OSHA requirements, including 29 CFR 1910, subpart L, Sections 1910.160 and 1910.162.
2—Per OSHA requirements, protective gear (SCBA) should be available in the event personnel should reenter the area.
3—Discharge testing should be strictly limited to that which is essential to meet safety or performance requirements.
4—The agent should be recovered from the fire protection system in conjunction with testing or servicing, and recycled for later use or destroyed.
5—EPA has no intention of duplicating or displacing OSHA coverage related to the use of personal protective equipment (*e.g.*, respiratory protection), fire protection, hazard communication, worker training or any other occupational safety and health standard with respect to halon substitutes.

[71 FR 56367, Sept. 27, 2006]

## APPENDIX Q TO SUBPART G OF PART 82—UNACCEPTABLE SUBSTITUTES LISTED IN THE MARCH 28, 2007 FINAL RULE, EFFECTIVE MAY 29, 2007

### FOAM BLOWING UNACCEPTABLE SUBSTITUTES

| End use | Substitute | Decision | Further information |
|---|---|---|---|
| —Rigid polyurethane commercial refrigeration ....<br>—Rigid polyurethane sandwich panels.<br>—Rigid polyurethane slabstock and other foams. | HCFC–22; HCFC–142b as substitutes for HCFC–141b. | Unacceptable [1] ..... | Alternatives exist with lower or zero-ODP. |
| —Rigid polyurethane and polyisocyanurate laminated boardstock.<br>—Rigid polyurethane appliance.<br>—Rigid polyurethane spray and commercial refrigeration, and sandwich panels.<br>—Rigid polyurethane slabstock and other foams.<br>—Polystyrene extruded insulation boardstock and billet.<br>—Phenolic insulation board and bunstock.<br>—Flexible polyurethane.<br>—Polystyrene extruded sheet. | HCFC–22; HCFC–142b as substitutes for CFCs. | Unacceptable [2] ..... | Alternatives exist with lower or zero-ODP. |

[1] For existing users of HCFC–22 and HCFC–142b as of November 4, 2005 other than in marine applications, the unacceptability determination is effective on March 1, 2008; for existing users of HCFC–22 and HCFC–142b as of November 4, 2005 in marine applications, including marine flotation foam, the unacceptability determination is effective on September 1, 2009. For an existing user of HCFC–22 or HCFC–142b that currently operates in only one facility that it does not own, and is scheduled to transition to a non-ODS, flammable alternative to coincide with a move to a new facility and installation of new process equipment that cannot be completed by March 1, 2008, the unacceptability determination is effective January 1, 2010.
[2] For existing users of HCFC–22 and HCFC–142b in polystyrene extruded insulation boardstock and billet and the other foam end uses, as of November 4, 2005, the unacceptability determination is effective on January 1, 2010.

[72 FR 14442, Mar. 28, 2007]

## Subpart H—Halon Emissions Reduction

SOURCE: 63 FR 11096, Mar. 5, 1998, unless otherwise noted.

### § 82.250 Purpose and scope.

(a) The purpose of this subpart is to reduce the emissions of halon in accordance with section 608 of the Clean Air Act by banning the manufacture of halon blends; banning the intentional release of halons during repair, testing, and disposal of equipment containing halons and during technician training; requiring organizations that employ technicians to provide emissions reduction training; and requiring proper disposal of halons and equipment containing halons.

(b) This subpart applies to any person testing, servicing, maintaining, repairing or disposing of equipment that contains halons or using such equipment during technician training. This subpart also applies to any person disposing of halons; to manufacturers of halon blends; and to organizations that employ technicians who service halon-containing equipment.

### § 82.260 Definitions.

*Halon-containing equipment* means equipment used to store, transfer, and/or disperse halon.

*Disposal of halon* means the process leading to and including discarding of halon from halon-containing equipment.

*Disposal of halon-containing equipment* means the process leading to and including:

(1) The discharge, deposit, dumping or placing of any discarded halon-containing equipment into or on any land or water;

(2) The disassembly of any halon-containing equipment for discharge, deposit, or dumping or placing of its discarded component parts into or on any land or water; or

(3) The disassembly of any halon-containing equipment for reuse of its component parts.

*Halon* means any of the Class I, Group II substances listed in subpart A, appendix A of 40 CFR part 82. This group consists of the three halogenated hydrocarbons known as Halon 1211, Halon 1301, and Halon 2402, and all isomers of these chemicals.

*Halon product* means any mixture or combination of substances that contains only one halon (e.g., Halon 1301 plus dinitrogen gas ($N_2$))

*Halon blend* means any mixture or combination of substances that contains two or more halons.

*Manufacturer* means any person engaged in the direct manufacture of halon, halon blends or halon-containing equipment.

*Person* means any individual or legal entity, including an individual, corporation, partnership, association, state, municipality, political subdivision of a state, Indian tribe, and any agency, department, or instrumentality of the United States, and any officer, agent, or employee thereof.

*Technician* means any person who performs testing, maintenance, service, or repair that could reasonably be expected to release halons from equipment into the atmosphere. Technician also means any person who performs disposal of equipment that could reasonably be expected to release halons from the equipment into the atmosphere. Technician includes but is not limited to installers, contractor employees, in-house service personnel, and in some cases, owners.

### § 82.270 Prohibitions.

(a) Effective April 6, 1998 no person may newly manufacture any halon blend. Halon blends manufactured solely for the purpose of aviation fire protection are not subject to this prohibition, provided that:

(1) The manufacturer or its designee is capable of recycling the blend to the relevant industry standards for the chemical purity of each individual halon;

(2) The manufacturer includes in all sales contracts for blends produced by it on or after April 6, 1998 the provision that the blend must be returned to it or its designee for recycling; and

(3) The manufacturer or its designee in fact recycles blends produced by the manufacturer on or after April 6, 1998 and returned to it for recycling to the relevant industry standards for the

chemical purity of each individual halon.

(b) Effective April 6, 1998, no person testing, maintaining, servicing, repairing, or disposing of halon-containing equipment or using such equipment for technician training may knowingly vent or otherwise release into the environment any halons used in such equipment.

(1) De minimis releases associated with good faith attempts to recycle or recover halon are not subject to this prohibition.

(2) Release of residual halon contained in fully discharged total flooding fire extinguishing systems would be considered a *de minimis* release associated with good faith attempts to recycle or recover halon.

(3) Release of halons during testing of fire extinguishing systems is not subject to this prohibition if the following four conditions are met:

(i) Systems or equipment employing suitable alternative fire extinguishing agents are not available;

(ii) System or equipment testing requiring release of extinguishing agent is essential to demonstrate system or equipment functionality;

(iii) Failure of the system or equipment would pose great risk to human safety or the environment; and

(iv) A simulant agent cannot be used in place of the halon during system or equipment testing for technical reasons.

(4) Releases of halons associated with research and development of halon alternatives, and releases of halons necessary during analytical determination of halon purity using established laboratory practices are exempt from this prohibition.

(5) This prohibition does not apply to qualification and development testing during the design and development process of halon-containing systems or equipment when such tests are essential to demonstrate system or equipment functionality and when a suitable simulant agent can not be used in place of the halon for technical reasons.

(6) This prohibition does not apply to the emergency release of halons for the legitimate purpose of fire extinguishing, explosion inertion, or other emergency applications for which the equipment or systems were designed.

(c) Effective April 6, 1998, organizations that employ technicians who test, maintain, service, repair or dispose of halon-containing equipment shall take appropriate steps to ensure that technicians hired on or before April 6, 1998 will be trained regarding halon emissions reduction by September 1, 1998. Technicians hired after April 6, 1998 shall be trained regarding halon emissions reduction within 30 days of hiring, or by September 1, 1998, whichever is later.

(d) Effective April 6, 1998, no person shall dispose of halon-containing equipment except by sending it for halon recovery to a manufacturer operating in accordance with NFPA 10 and NFPA 12A standards, a fire equipment dealer operating in accordance with NFPA 10 and NFPA 12A standards or a recycler operating in accordance with NFPA 10 and NFPA 12A standards. This provision does not apply to ancillary system devices such as electrical detection control components which are not necessary to the safe and secure containment of the halon within the equipment, to fully discharged total flooding systems, or to equipment containing only de minimis quantities of halons.

(e) Effective April 6, 1998, no person shall dispose of halon except by sending it for recycling to a recycler operating in accordance with NFPA 10 and NFPA 12A standards, or by arranging for its destruction using one of the following controlled processes:

(1) Liquid injection incineration;

(2) Reactor cracking;

(3) Gaseous/fume oxidation;

(4) Rotary kiln incineration;

(5) Cement kiln;

(6) Radiofrequency plasma destruction; or

(7) An EPA-approved destruction technology that achieves a destruction efficiency of 98% or greater.

(f) Effective April 6, 1998, no owner of halon-containing equipment shall allow halon release to occur as a result of failure to maintain such equipment.

## Subpart I—Ban on Refrigeration and Air-Conditioning Appliances Containing HCFCs

SOURCE: 74 FR 66467, Dec. 15, 2009, unless otherwise noted.

### § 82.300 Purpose.

The purpose of this subpart is to protect stratospheric ozone by restricting the sale and distribution of HCFC containing appliances under authority of section 615 of the Clean Air Act as amended in 1990.

### § 82.302 Definitions.

As used in this subpart, the term:

*Appliance* means any device which contains and uses a refrigerant and which is used for household or commercial purposes, including any air conditioner, refrigerator, chiller, or freezer.

*Class I substance* means any controlled substance designated as class I in 40 CFR part 82, appendix A to subpart A.

*Class II substance* means any controlled substance designated as class II in 40 CFR part 82, appendix B to subpart A.

*Consumer*, when used to describe a person taking action with regard to a product, means the ultimate purchaser, recipient or user of a product.

*Distributor*, when used to describe a person taking action with regard to a product, means:

(1) The seller of a product to a consumer or another distributor; or

(2) A person who sells or distributes that product in interstate commerce, including sale or distribution preceding export from, or following import to, the United States.

*Hydrochlorofluorocarbon* means any substance listed as class II in 40 CFR part 82, appendix B to subpart A.

*Manufactured*, for an appliance, means the date on which the appliance's refrigerant circuit is complete, the appliance can function, the appliance holds a refrigerant charge, and the appliance is ready for use for its intended purposes; for a pre-charged appliance component, ''manufactured'' means the date that the original equipment manufacturer has physically completed assembly of the component, the component is charged with refrigerant, and the component is ready for initial sale or distribution.

*Person* means any individual or legal entity, including an individual, corporation, partnership, association, State, municipality, political subdivision of a State, Indian tribe; any agency, department, or instrumentality of the United States; and any officer, agent, or employee thereof.

*Pre-charged appliance* means any appliance charged with refrigerant prior to sale or distribution, or offer for sale or distribution in interstate commerce.

*Pre-charged appliance component* means any portion of an appliance including but not limited to condensers, compressors, line sets, and coils that is charged with refrigerant prior to sale or distribution or offer for sale or distribution in interstate commerce.

*Product* means an item or category of items manufactured from raw or recycled materials which is used to perform a function or task.

*Refrigerant* means, for purposes of this subpart, any substance consisting in part or whole of a class I or class II ozone-depleting substance that is used for heat transfer purposes and provides a cooling effect.

### § 82.304 Prohibitions.

Effective January 1, 2010, no person may sell or distribute, or offer to sell or distribute, in interstate commerce any product identified in § 82.306.

### § 82.306 Prohibited products.

Effective January 1, 2010, the following products are subject to the prohibitions specified under § 82.304—

(a) Any pre-charged appliance manufactured on or after January 1, 2010 containing HCFC–22, HCFC–142b or a blend containing one or both of these controlled substances.

(b) Any pre-charged appliance component for air-conditioning or refrigeration appliances manufactured on or after January 1, 2010 containing HCFC–22, HCFC–142b, or a blend containing one or both of these controlled substances.

## PARTS 83–84 [RESERVED]