AUTHENTICATED
U.S. GOVERNMENT
INFORMATION
GPO

Title 40—Protection of Environment

(This book contains part 1000 to End)

Part

CHAPTER I—Environmental Protection Agency (Continued) 1027

CHAPTER IV—Environmental Protection Agency and Department of Justice 1400

CHAPTER V—Council on Environmental Quality 1500

CHAPTER VI—Chemical Safety and Hazard Investigation Board 1600

CHAPTER VII—Environmental Protection Agency and Department of Defense; Uniform National Discharge Standards for Vessels of the Armed Forces 1700

CHAPTER I—ENVIRONMENTAL PROTECTION AGENCY (CONTINUED)

EDITORIAL NOTE: Nomenclature changes to chapter I appear at 65 FR 47324, 47325, Aug. 2, 2000, and 66 FR 34375, 34376, June 28, 2001.

SUBCHAPTER U—AIR POLLUTION CONTROLS

Part		*Page*
1027	Fees for engine, vehicle, and equipment compliance programs	4
1033	Control of emissions from locomotives	11
1039	Control of emissions from new and in-use nonroad compression-ignition engines	90
1042	Control of emissions from new and in-use marine compression-ignition engines and vessels	168
1043	Control of NO_X, SO_X, and PM emissions from engines and vessels subject to the MARPOL protocol	254
1045	Control of emissions from spark-ignition propulsion marine engines and vessels	264
1048	Control of emissions from new, large nonroad spark-ignition engines	329
1051	Control of emissions from recreational engines and vehicles	388
1054	Control of emissions from new, small nonroad spark-ignition engines and equipment	453
1060	Control of evaporative emissions from new and in-use nonroad and stationary equipment	522
1065	Engine-testing procedures	563
1068	General compliance provisions for engine programs	757
1074	Preemption of state standards and procedures for waiver of federal preemption for nonroad engines and nonroad vehicles	821

SUBCHAPTER U—AIR POLLUTION CONTROLS

PART 1027—FEES FOR ENGINE, VEHICLE, AND EQUIPMENT COMPLIANCE PROGRAMS

Sec.
1027.101 To whom do these requirements apply?
1027.105 How much are the fees?
1027.110 What special provisions apply for certification related to motor vehicles?
1027.115 What special provisions apply for certification related to nonroad and stationary engines?
1027.120 Can I qualify for reduced fees?
1027.125 Can I get a refund?
1027.130 How do I make a fee payment?
1027.135 What provisions apply to a deficient filing?
1027.140 What reporting and recordkeeping requirements apply under this part?
1027.150 What definitions apply to this part?
1027.155 What abbreviations apply to this subpart?

AUTHORITY: 42 U.S.C. 7401–7671q.

SOURCE: 73 FR 59184, Oct. 8, 2008, unless otherwise noted.

§ 1027.101 To whom do these requirements apply?

(a) This part prescribes fees manufacturers must pay for activities related to EPA's engine, vehicle, and equipment compliance program (EVECP). This includes activities related to approving certificates of conformity and performing tests and taking other steps to verify compliance with emission standards. You must pay fees as described in this part if you are a manufacturer of any of the following products:

(1) Motor vehicles and motor vehicle engines we regulate under 40 CFR part 86. This includes light-duty vehicles, light-duty trucks, medium-duty passenger vehicles, highway motorcycles, and heavy-duty highway engines and vehicles.

(2) The following nonroad engines and equipment:

(i) Locomotives and locomotive engines we regulate under 40 CFR part 92 or 1033.

(ii) Nonroad compression-ignition engines we regulate under 40 CFR part 89 or 1039.

(iii) Marine compression-ignition engines we regulate under 40 CFR part 94, 1042, or 1043.

(iv) Marine spark-ignition engines and vessels we regulate under 40 CFR part 91, 1045, or 1060. We refer to these as Marine SI engines.

(v) Nonroad spark-ignition engines above 19 kW we regulate under 40 CFR part 1048. We refer to these as Large SI engines.

(vi) Recreational vehicles we regulate under 40 CFR part 1051.

(vii) Nonroad spark-ignition engines and equipment at or below 19 kW we regulate under 40 CFR part 90, 1054, or 1060. We refer to these as Small SI engines.

(3) The following stationary internal combustion engines:

(i) Stationary compression-ignition engines we certify under 40 CFR part 60, subpart IIII.

(ii) Stationary spark-ignition engines we certify under 40 CFR part 60, subpart JJJJ.

(4) Portable fuel containers we regulate under 40 CFR part 59, subpart F.

(b) This part applies to applications for certification that we receive on or after December 8, 2008. Earlier applications are subject to the provisions of 40 CFR part 85, subpart Y, as that provision read before December 8, 2008.

(c) Nothing in this part limits our authority to conduct testing or to require you to conduct testing as provided in the Act, including our authority to require you to conduct in-use testing under section 208 of the Act (42 U.S.C. 7542).

(d) Paragraph (a) of this section identifies the parts of the CFR that define emission standards and other requirements for particular types of engines, vehicles, and fuel-system components. This part 1027 refers to each of these other parts generically as the ''standard-setting part.'' For example, 40 CFR part 1051 is always the standard-setting part for recreational vehicles. For some nonroad engines, we allow for certification related to evaporative emissions separate from exhaust emissions. In this case, 40 CFR part 1060 is

the standard-setting part for the equipment or fuel system components you produce.

[73 FR 59184, Oct. 8, 2008, as amended at 75 FR 22981, Apr. 30, 2010]

§ 1027.105 How much are the fees?

(a) Fees are determined based on the date we receive a complete application for certification. Each reference to a year in this subpart refers to the calendar year, unless otherwise specified. Paragraph (b) of this section specifies baseline fees, which applied for certificates received in 2005. For engine and vehicles not yet subject to standards in 2005, these values represent the fees that apply initially based on available information to characterize what the fees would have been in 2005. See paragraph (c) of this section for provisions describing how we calculate fees for future years.

(b) The following baseline fees for each application for certification:

(1) Except as specified in paragraph (b)(2) of this section for Independent Commercial Importers, the following fees apply for motor vehicles and motor vehicle engines:

Category	Certificate type	Fee
(i) Light-duty vehicles and trucks	Federal	$33,883
(ii) Light-duty vehicles and trucks	California-only	16,944
(iii) Medium-duty passenger vehicles	Federal	33,883
(iv) Medium-duty passenger vehicles	California-only	16,944
(v) Highway motorcycle	All	2,414
(vi) Heavy-duty highway engine	Federal	21,578
(vii) Heavy-duty highway engine	California-only	826
(viii) Complete heavy-duty highway vehicles	Federal	33,883
(ix) Complete heavy-duty highway vehicles	California-only	16,944
(x) Heavy-duty vehicle	Evap	826

(2) A fee of $8,387 applies for Independent Commercial Importers with respect to the following motor vehicles:

(i) Light-duty vehicles and light-duty trucks.

(ii) Medium-duty passenger vehicles.

(iii) Complete heavy-duty highway vehicles.

(3) The following fees apply for nonroad and stationary engines, vehicles, equipment, and components:

Category	Certificate type	Fee
(i) Locomotives and locomotive engines	All	$826
(ii) Marine compression-ignition engines and stationary compression-ignition engines with per-cylinder displacement at or above 10 liters.	All, including EIAPP	826
(iii) Other nonroad compression-ignition engines and stationary compression-ignition engines with per-cylinder displacement below 10 liters.	All	1,822
(iv) Large SI engines	All	826
(v) Stationary spark-ignition engines above 19 kW	All	826
(vi) Marine SI engines and Small SI engines	Exhaust only	826
(vii) Stationary spark-ignition engines at or below 19 kW	Exhaust only	826
(viii) Recreational vehicles	Exhaust (or combined exhaust and evap).	826
(ix) Equipment and fuel-system components associated with nonroad and stationary spark-ignition engines, including portable fuel containers.	Evap (where separate certification is required).	241

(c) We will calculate adjusted fees for later years based on changes in the Consumer Price Index and the number of certificates. We will announce adjusted fees for a given year by January 31 of the preceding year.

(1) We will adjust the values specified in paragraph (b) of this section for later years as follows:

(i) Use the fee identified in § 1027.105(b)(3) through 2014 for certification related to evaporative emissions from nonroad and stationary engines when a separate fee applies for certification to evaporative emission standards. Use the following equation starting with 2015:

$$\text{Certificate Fee}_{CY} = \left[\left(Op + L \cdot \frac{CPI_{CY-2}}{CPI_{2006}}\right)\right] \cdot \frac{1.169}{\left[\left(cert\#_{MY-2} + cert\#_{MY-3}\right) \cdot 0.5\right]}$$

Where:

Certificate Fee_{CY} = Fee per certificate for a given year.

Op = operating costs are all of EPA's nonlabor costs for each category's compliance program, including any fixed costs associated with EPA's testing laboratory, as described in paragraph (d)(1) of this section.

L = the labor costs, to be adjusted by the Consumer Price Index, as described in paragraph (d)(1) of this section.

CPI_{CY-2} = the Consumer Price Index for the month of November two years before the applicable calendar year, as described in paragraph (d)(2) of this section.

CPI_{2006} = 201.8. This is based on the October 2006 value of the Consumer Price Index.

OH = 1.169. This is based on EPA overhead, which is applied to all costs.

$cert\#_{MY-2}$ = the total number of certificates issued for a fee category in the model year two years before the calendar year for the applicable fees as described in paragraph (d)(3) of this section.

$cert\#_{MY-3}$ = the total number of certificates issued for a fee category in the model year three years before the calendar year for the applicable fees as described in paragraph (d)(3) of this section.

(ii) Use the following equation for all other certificates for 2006 and later:

$$\text{Certificate Fee}_{CY} = \left[\left((Op + L) \cdot \frac{CPI_{CY-2}}{CPI_{2002}}\right)\right] \cdot \frac{1.169}{\left[\left(cert\#_{MY-2} + cert\#_{MY-3}\right) \cdot 0.5\right]}$$

Where:

CPI_{2002} = 180.9. This is based on the December 2002 value of the Consumer Price Index as described in paragraph (d)(2) of this section.

(2) The fee for any year will remain at the previous year's amount until the value calculated in paragraph (c)(1) of this section differs by at least $50 from the amount specified for the previous year.

(d) Except as specified in § 1027.110(a) for motor vehicles and motor vehicle engines, we will use the following values to determine adjusted fees using the equation in paragraph (c) of this section:

(1) The following values apply for operating costs and labor costs:

Engine or Vehicle Category	Op	L
(i) Light-duty, medium-duty passenger, and complete heavy-duty highway vehicle certification	$3,322,039	$2,548,110
(ii) Light-duty, medium-duty passenger, and complete heavy-duty highway vehicle in-use testing	2,858,223	2,184,331
(iii) Independent Commercial Importers identified in § 1027.105(b)(2)	344,824	264,980
(iv) Highway motorcycles	225,726	172,829
(v) Heavy-duty highway engines	1,106,224	1,625,680
(vi) Nonroad compression-ignition engines that are not locomotive or marine engines, and stationary compression-ignition engines with per-cylinder displacement below 10 liters	486,401	545,160
(vii) Evaporative certificates related to nonroad and stationary engines	5,039	236,670
(viii) All other	177,425	548,081

(2) The applicable Consumer Price Index is based on the values published by the Bureau of Labor Statistics for all U.S. cities using the ''U.S. city average'' area, ''all items,'' and ''not seasonally adjusted'' numbers (see *ftp://ftp.bls.gov/pub/special.requests/cpi/cpiai.txt*). For example, we calculated the 2006 fees using the Consumer Price Index for November 2004, which is 191.0.

(3) Fee categories for counting the number of certificates issued are based on the grouping shown in paragraph (d)(1) of this section.

(e) The following example for calculating the 2006 complete federal heavy duty highway vehicle fee illustrates the fee adjustment:

O_p = $1,106,224
L = $1,625,680
CPI_{2002} = 180.9
CPI_{2004} = 191.0
cert $\#_{2004}$ = 131
cert$\#_{2003}$ = 95
Fee_{06} = [$1,106,224 + $1,625,680 . (191.0/180.9)] . 1.169/[(131+95) . 0.5] = $29,200.88
Assessed Fee = $29,201

[73 FR 59184, Oct. 8, 2008, as amended at 74 FR 8423, Feb. 24, 2009; 75 FR 22981, Apr. 30, 2010]

§ 1027.110 What special provisions apply for certification related to motor vehicles?

(a) We will adjust fees for 2006 and later years for light-duty, medium-duty passenger, and complete heavy-duty highway vehicles as follows:

(1) *California-only certificates.* Calculate adjusted fees for California-only certificates by applying the light-duty, medium-duty passenger, and complete heavy-duty highway vehicle certification Op and L values to the equation in § 1027.105(c). The total number of certificates issued will be the total number of California-only and federal light-duty, medium-duty passenger, and complete heavy-duty highway vehicle certificates issued during the appropriate model years.

(2) *Federal certificates.* Calculate adjusted fees for federal certificates with the following three steps:

(i) Apply the light-duty, medium-duty passenger, and complete heavy-duty highway vehicle certification Op and L values to the equation in § 1027.105(c) to determine the certification portion of the light-duty fee. The total number of certificates issued will be the total number of California-only and federal light-duty, medium-duty passenger and complete heavy-duty highway vehicle certificates issued during the appropriate model years.

(ii) Apply the light-duty, medium-duty passenger, and complete heavy-duty highway vehicle in-use testing Op and L values to the equation in § 1027.105(c) to determine the in-use testing portion of the fee. The total number of certificates issued will be the total number of federal light-duty, medium-duty passenger, and complete heavy-duty highway vehicle certificates issued during the appropriate model years.

(iii) Add the certification and in-use testing portions determined in paragraphs (a)(2)(i) and (ii) of this section to determine the total light-duty, medium-duty passenger, and complete heavy-duty highway vehicle fee for each federal certificate.

(b) For light-duty vehicles, light-duty trucks, medium-duty passenger vehicles, highway motorcycles, and complete heavy-duty highway vehicles subject to exhaust emission standards, the number of certificates issued as specified in § 1027.105(d)(3) is based only on engine families with respect to exhaust emissions. A separate fee applies for each evaporative family for heavy-duty engines.

(c) If you manufacture a heavy-duty vehicle that another company has certified as an incomplete vehicle such that you exceed the maximum fuel tank size specified by the original manufacturer in the applicable certificate of conformity, you must submit a new application for certification and certification fee for the vehicle.

§ 1027.115 What special provisions apply for certification related to nonroad and stationary engines?

(a) For spark-ignition engines above 19 kW that we regulate under 40 CFR part 1048 and for all compression-ignition engines, the applicable fee is based only on engine families with respect to exhaust emissions.

(b) For manufacturers certifying recreational vehicles with respect to both exhaust and evaporative emission standards, fees are determined using one of the following approaches:

(1) If your engine family includes demonstration of compliance with both exhaust and evaporative emission standards, the applicable fee is based on certification related to the combined family. No separate fee applies for certification with respect to evaporative emission standards. These are all considered engine families complying with exhaust emissions for determining the number of certificates for calculating fees for later years.

(2) If you have separate families for demonstrating compliance with exhaust and evaporative emission standards, a separate fee from the appropriate fee category applies for each unique family. Also, the number of certificates issued as specified in § 1027.105(d)(3) is based on a separate count of emission families for exhaust and evaporative emissions for each respective fee category.

(c) For manufacturers certifying other spark-ignition engines or equipment with respect to exhaust and evaporative emission standards, a separate fee from the appropriate fee category applies for each unique family. A single engine or piece of equipment may involve separate emission families and certification fees for exhaust and evaporative emissions. Also, the number of certificates issued as specified in § 1027.105(d)(3) is based on a separate count of emission families for exhaust and evaporative emissions for each respective fee category.

(d) For any certification related to evaporative emissions from engines, equipment, or components not covered by paragraph (a) through (c) of this section, the fee applies for each certified product independent of certification for exhaust emissions, as illustrated in the following examples:

(1) A fuel tank certified to meet permeation and diurnal emission standards would count as a single family for assessing the certification fee and for calculating fee amounts for future years.

(2) If an equipment manufacturer applies for certification to generate or use emission credits for fuel tanks and fuel lines, each affected fuel-tank and fuel-line family would count as a single family for assessing the certification fee and for calculating fee amounts for future years. This fee applies whether or not the equipment manufacturer is applying for certification to demonstrate compliance with another emission standard, such as running losses.

(e) If you certify fuel system components under 40 CFR part 1060, a single fee applies for each emission family even if those components are used with different types of nonroad or stationary engines.

(f) If your application for certification relates to emission standards that apply only in California, you must pay the same fee identified for meeting EPA standards.

(g) For marine compression-ignition engines, if you apply for a Federal certificate and an EIAPP certificate for the same engine family, a single fee applies for the engine family (*see* 40 CFR parts 94, 1042, and 1043).

(h) If you produce engines for multiple categories in a single engine family, a single fee applies for the engine family. For example, 40 CFR 60.4210 allows you to produce stationary and nonroad compression-ignition engines in a single engine family. If the certification fee for the different types of engines is different, the fee that applies for these engines is based on the emission standards to which you certify the engine family. For example, if you certify marine diesel engines to the standards that apply to land-based nonroad diesel engines under 40 CFR 94.912, the certification fee is based on the rate that applies for land-based nonroad diesel engines.

[73 FR 59184, Oct. 8, 2008, as amended at 75 FR 22982, Apr. 30, 2010]

§ 1027.120 Can I qualify for reduced fees?

(a) *Eligibility requirements*. Both of the following conditions must be met before you are eligible for a reduced fee:

(1) The certificate is to be used for sale of vehicles or engines within the United States.

(2) The full fee for an application for certification for a model year exceeds 1.0% of the aggregate projected retail sales price of all vehicles or engines covered by the certificate.

(b) *Initial reduced fee calculation*. (1) If the conditions of paragraph (a) of this section are met, the initial fee paid must be $750 or 1.0% of the aggregate projected retail sales price of all the vehicles or engines to be covered by the certificate, whichever is greater.

(2) For vehicles or engines that are converted to operate on an alternative fuel using as the basis for the conversion a vehicle or engine that is covered by an existing certificate of conformity, the cost basis used in this section must be the aggregate projected

retail value-added to the vehicle or engine by the conversion rather than the full cost of the vehicle or engine. For this provision to apply, the existing certificate must cover the same sales area and model year as the requested certificate for the converted vehicle or engine.

(3) For remanufacturing systems, the cost basis used in this section must be the aggregate projected retail cost of a complete remanufacture, including the cost of the replacement components, software, and assembly.

(4) For ICI certification applications, the cost basis of this section must be the aggregate projected retail cost of the entire vehicle(s) or engine(s), not just the value added by the conversion. If the vehicles/engines covered by an ICI certificate are not being offered for sale, the manufacturer shall use the fair retail market value of the vehicles/engines as the retail sale price required in this section. For an ICI application for certification, the retail sales price (or fair retail market value) must be based on the applicable National Automobile Dealer's Association (NADA) appraisal guide and/or other evidence of the actual market value.

(5) The aggregate cost used in this section must be based on the total projected sales of all vehicles and engines under a certificate, including vehicles and engines modified under the modification and test option in 40 CFR 85.1509 and 89.609. The projection of the number of vehicles or engines to be covered by the certificate and their projected retail selling price must be based on the latest information available at the time of the fee payment.

(6) You may submit a reduced fee as described in this section if it is accompanied by a calculation of the fee based on the number of vehicles covered and the projected aggregate retail sales price as specified on the fee filing form. Your reduced fee calculation shall be deemed approved unless we determine that the criteria of this section have not been met. We may make such a determination either before or after issuing a certificate of conformity. If we determine that the requirements of this section have not been met, we may deny future reduced fee applications and require submission of the full fee payment until you demonstrate to our satisfaction that your reduced fee submissions are based on accurate data and that final fee payments are made within 45 days of the end of the model year.

(7) If we deny your request for a reduced fee, you must send us the appropriate fee within 30 days after we notify you.

(c) *Revision of the number of vehicles or engines covered by the certificate.* (1) You must take both of the following steps if the number of vehicles or engines to be produced or imported under the certificate exceeds the number indicated on the certificate (including a certificate under which modification and test vehicles are imported under 40 CFR 85.1509 and 89.609):

(i) Request that we revise the certificate with a number that indicates the new projection of the vehicles or engines to be covered by the certificate. We must issue the revised certificate before the additional number of vehicles or engines may be sold or finally imported into the United States.

(ii) Submit payment of 1.0% of the aggregate projected retail sales price of all the additional vehicles or engines.

(2) You must receive a revised certificate before the sale or final importation of any vehicles or engines, including modification and test vehicles, that are not originally included in the certificate issued under paragraph (b) of this section, or as indicated in a revised certificate issued under paragraph (c)(1) of this section. Such vehicles that are sold or imported before we issue a revised certificate are deemed to be not covered by a certificate of conformity.

(d) *Final reduced fee calculation and adjustment.* (1) If the initial fee payment is less than the final reduced fee, you must pay the difference between the initial reduced fee and the final reduced fee using the provisions of § 1027.130. Calculate the final reduced fee using the procedures of paragraph (c) of this section but using actual production figures rather than projections and actual retail sales value rather than projected retail sales value.

(2) You must pay the difference between the initial reduced fee and the final reduced fee within 45 days of the

end of the model year. The total fees paid for a certificate may not exceed the applicable full fee specified in § 1027.105. We may void the applicable certificate if you fail to make a complete payment within the specified period. We may also refuse to grant reduced fee requests submitted under paragraph (b)(5) of this section.

(3) If the initial fee payment exceeds the final reduced fee, you may request a refund using the procedures of § 1027.125.

(e) *Records retention.* You are subject to the applicable requirements to maintain records under this chapter. If you fail to maintain required records or provide them to us, we may void the certificate associated with such records. You must also record the basis you used to calculate the projected sales and fair retail market value and the actual sales and retail price for the vehicles and engines covered by each certificate issued under this section. You must keep this information for at least three years after we issue the certificate and provide it to us within 30 days of our request.

§ 1027.125 Can I get a refund?

(a) We will refund the total fee imposed under this part if you ask for a refund after failing to get a certificate for any reason.

(b) If your actual sales or the actual retail prices in a given year are less than you projected for calculating a reduced fee under § 1027.120, we will refund the appropriate portion of the fee. We will also refund a portion of the initial payment if it exceeds the final fee for the engines, vehicles, or equipment covered by the certificate application.

(1) You are eligible for a partial refund related only to a certificate used for the sale of engines, vehicles, or equipment under that certificate in the United States.

(2) Include all the following in your request for a partial refund of reduced fee payments:

(i) State that you sold engines, vehicles, or equipment under the applicable certificate in the United States.

(ii) Identify the number of engines, vehicles, or equipment you produced or imported under the certificate, and whether the engines, vehicles, or equipment have been sold.

(iii) Identify the reduced fee that you paid under the applicable certificate.

(iv) Identify the actual retail sales price for the engines, vehicles, or equipment produced or imported under the certificate.

(v) Calculate the final value of the reduced fee using actual production figures and retail prices.

(vi) Calculate the refund amount.

(c) We will approve your request to correct errors in the amount of the fee.

(d) All refunds must be applied for within six months after the end of the model year.

(e) Send refund and correction requests to the Fee Program Specialist, U.S. Environmental Protection Agency, Vehicle Programs and Compliance Division, 2000 Traverwood Dr., Ann Arbor, MI 48105, online at *www.Pay.gov*, or as specified in guidance by the Administrator.

(f) You may request to have refund amounts applied to the amount due on another application for certification.

§ 1027.130 How do I make a fee payment?

(a) Pay fees to the order of the Environmental Protection Agency in U.S. dollars using any of the following methods: money order, bank draft, certified check, corporate check, electronic funds transfer, any method available for payment online at *www.Pay.gov.*, or as specified in EPA guidance.

(b) Send a completed fee filing form to the address designated on the form for each fee payment or electronically at www.Pay.gov., or as provided in EPA guidance. These forms are available on the Internet at *http://www.epa.gov/otaq/guidance.htm.*

(c) You must pay the fee amount due before we will start to process an application for certification.

(d) If we deny a reduced fee, you must pay the proper fee within 30 days after we notify you of our decision.

§ 1027.135 What provisions apply to a deficient filing?

(a) Any filing under this part is deficient if it is not accompanied by a

completed fee filing form and full payment of the appropriate fee.

(b) A deficient filing will be rejected unless the completed form and full payment are submitted within a time limit we specify. We will not process an application for certification if the associated filing is deficient.

§ 1027.140 What reporting and recordkeeping requirements apply under this part?

Under the Paperwork Reduction Act (44 U.S.C. 3501 *et seq.*), the Office of Management and Budget approves the reporting and recordkeeping specified in the applicable regulations. The following items illustrate the kind of reporting and recordkeeping we require for engines, vehicles, and equipment regulated under this part:

(a) Filling out fee filing forms under § 1027.130.

(b) Retaining fee records, including reduced fee documentation, under § 1027.120.

(c) Requesting refunds under § 1027.125.

§ 1027.150 What definitions apply to this part?

The definitions in this section apply to this part. As used in this part, all undefined terms have the meaning the Act or the standard-setting part gives to them. The definitions follow:

Application for Certification means a manufacturer's submission of an application for certification.

California-only certificate is a certificate of conformity issued by EPA showing compliance with emission standards established by California.

Federal certificate is a certificate of conformity issued by EPA showing compliance with EPA emission standards specified in one of the standard-setting parts specified in § 1027.101(a).

Light-duty means relating to light-duty vehicles and light-duty trucks.

Manufacturer has the meaning given in section 216(1) of the Act. In general, this term includes any person who manufactures an engine, vehicle, vessel, or piece of equipment for sale in the United States or otherwise introduces a new engine, vehicle, vessel, or piece of equipment into commerce in the United States. This includes importers who import such products for resale, but not dealers.

Total number of certificates issued means the number of certificates for which fees have been paid. This term is not intended to represent multiple certificates that are issued within a single family or test group.

Void has the meaning given in 40 CFR 1068.30.

We (us, our) means the Administrator of the Environmental Protection Agency and any authorized representatives.

[73 FR 59184, Oct. 8, 2008, as amended at 75 FR 22982, Apr. 30, 2010]

§ 1027.155 What abbreviations apply to this subpart?

The following symbols, acronyms, and abbreviations apply to this part:

CFR	Code of Federal Regulations.
EPA	U.S. Environmental Protection Agency.
Evap	Evaporative Emissions.
EVECP ..	Engine, vehicle, and equipment compliance program.
ICI	Independent Commercial Importer.
U.S.	United States.

PART 1033—CONTROL OF EMISSIONS FROM LOCOMOTIVES

Subpart A—Overview and Applicability

Sec.
1033.1 Applicability.
1033.5 Exemptions and exclusions.
1033.10 Organization of this part.
1033.15 Other regulation parts that apply for locomotives.
1033.30 Submission of information.

Subpart B—Emission Standards and Related Requirements

1033.101 Exhaust emission standards.
1033.102 Transition to the standards of this part.
1033.110 Emission diagnostics—general requirements.
1033.112 Emission diagnostics for SCR systems.
1033.115 Other requirements.
1033.120 Emission-related warranty requirements.
1033.125 Maintenance instructions.
1033.130 Instructions for engine remanufacturing or engine installation.
1033.135 Labeling.

1033.140 Rated power.
1033.150 Interim provisions.

Subpart C—Certifying Engine Families

1033.201 General requirements for obtaining a certificate of conformity.
1033.205 Applying for a certificate of conformity.
1033.210 Preliminary approval.
1033.220 Amending maintenance instructions.
1033.225 Amending applications for certification.
1033.230 Grouping locomotives into engine families.
1033.235 Emission testing required for certification.
1033.240 Demonstrating compliance with exhaust emission standards.
1033.245 Deterioration factors.
1033.250 Reporting and recordkeeping.
1033.255 EPA decisions.

Subpart D—Manufacturer and Remanufacturer Production Line Testing and Audit Programs

1033.301 Applicability.
1033.305 General requirements.
1033.310 Sample selection for testing.
1033.315 Test procedures.
1033.320 Calculation and reporting of test results.
1033.325 Maintenance of records; submittal of information.
1033.330 Compliance criteria for production line testing.
1033.335 Remanufactured locomotives: installation audit requirements.
1033.340 Suspension and revocation of certificates of conformity.

Subpart E—In-use Testing

1033.401 Applicability.
1033.405 General provisions.
1033.410 In-use test procedure.
1033.415 General testing requirements.
1033.420 Maintenance, procurement and testing of in-use locomotives.
1033.425 In-use test program reporting requirements.

Subpart F—Test Procedures

1033.501 General provisions.
1033.505 Ambient conditions.
1033.510 Auxiliary power units.
1033.515 Discrete-mode steady-state emission tests of locomotives and locomotive engines.
1033.520 Alternative ramped modal cycles.
1033.525 Smoke testing.
1033.530 Duty cycles and calculations.
1033.535 Adjusting emission levels to account for infrequently regenerating aftertreatment devices.

Subpart G—Special Compliance Provisions

1033.601 General compliance provisions.
1033.610 Small railroad provisions.
1033.615 Voluntarily subjecting locomotives to the standards of this part.
1033.620 Hardship provisions for manufacturers and remanufacturers.
1033.625 Special certification provisions for non-locomotive-specific engines.
1033.630 Staged-assembly and delegated assembly exemptions.
1033.640 Provisions for repowered and refurbished locomotives.
1033.645 Non-OEM component certification program.
1033.650 Incidental use exemption for Canadian and Mexican locomotives.
1033.652 Special provisions for exported locomotives.
1033.655 Special provisions for certain Tier 0/Tier 1 locomotives.

Subpart H—Averaging, Banking, and Trading for Certification

1033.701 General provisions.
1033.705 Calculating emission credits.
1033.710 Averaging emission credits.
1033.715 Banking emission credits.
1033.720 Trading emission credits.
1033.722 Transferring emission credits.
1033.725 Requirements for your application for certification.
1033.730 ABT reports.
1033.735 Required records.
1033.740 Credit restrictions.
1033.745 Compliance with the provisions of this subpart.
1033.750 Changing a locomotive's FEL at remanufacture.

Subpart I—Requirements for Owners and Operators

1033.801 Applicability.
1033.805 Remanufacturing requirements.
1033.810 In-use testing program.
1033.815 Maintenance, operation, and repair.
1033.820 In-use locomotives.
1033.825 Refueling requirements.

Subpart J—Definitions and Other Reference Information

1033.901 Definitions.
1033.905 Symbols, acronyms, and abbreviations.
1033.915 Confidential information.
1033.920 How to request a hearing.
1033.925 Reporting and recordkeeping requirements.

AUTHORITY: 42 U.S.C. 7401–7671q.

SOURCE: 73 FR 37197, June 30, 2008, unless otherwise noted.

Subpart A—Overview and Applicability

§ 1033.1 Applicability.

The regulations in this part 1033 apply for all new locomotives and all locomotives containing a new locomotive engine, except as provided in § 1033.5.

(a) Standards begin to apply each time a locomotive or locomotive engine is originally manufactured or otherwise becomes new (defined in § 1033.901). The requirements of this part continue to apply as specified after locomotives cease to be new.

(b) Standards apply to the locomotive. However, in certain cases, the manufacturer/remanufacturer is allowed to test a locomotive engine instead of a complete locomotive, such as for certification. Also, you are not required to complete assembly of a locomotive to obtain a certificate of conformity for it, provided you meet the definition of ''manufacturer'' or ''remanufacturer'' (as applicable) in § 1033.901. For example, an engine manufacturer may obtain a certificate for locomotives which it does not manufacture, if the locomotives use its engines.

(c) Standards apply based on the year in which the locomotive was originally manufactured. The date of original manufacture is generally the date on which assembly is completed for the first time. For example, all locomotives originally manufactured in calendar years 2002, 2003, and 2004 are subject to the Tier 1 emission standards for their entire service lives.

(d) The following provisions apply when there are multiple persons meeting the definition of manufacturer or remanufacturer in § 1033.901:

(1) Each person meeting the definition of manufacturer must comply with the requirements of this part that apply to manufacturers; and each person meeting the definition of remanufacturer must comply with the requirements of this part that apply to remanufacturers. However, if one person complies with a specific requirement for a given locomotive, then all manufacturers/remanufacturers are deemed to have complied with that specific requirement.

(2) We will apply the requirements of subparts C, D, and E of this part to the manufacturer/remanufacturer that obtains the certificate of conformity for the locomotive. Other manufacturers and remanufacturers are required to comply with the requirements of subparts C, D, and E of this part only when notified by us. In our notification, we will specify a reasonable time period in which you need to comply with the requirements identified in the notice. See § 1033.601 for the applicability of 40 CFR part 1068 to these other manufacturers and remanufacturers.

(3) For example, we may require a railroad that installs certified kits but does not hold the certificate to perform production line auditing of the locomotives that it remanufactures. However, if we did, we would allow the railroad a reasonable amount of time to develop the ability to perform such auditing.

(e) The provisions of this part apply as specified for locomotives manufactured or remanufactured on or after July 7, 2008. See § 1033.102 to determine whether the standards of this part or the standards of 40 CFR part 92 apply for model years 2008 through 2012. For example, for a locomotive that was originally manufactured in 2007 and remanufactured on April 10, 2014, the provisions of this part begin to apply on April 10, 2014.

§ 1033.5 Exemptions and exclusions.

(a) Subpart G of this part exempts certain locomotives from the standards of this part.

(b) The definition of ''locomotive'' in § 1033.901 excludes certain vehicles. In general, the engines used in such excluded equipment are subject to standards under other regulatory parts. For example, see 40 CFR part 1039 for requirements that apply to diesel engines used in equipment excluded from the definition of ''locomotive'' in § 1033.901. The following locomotives are also excluded from the provisions of this part 1033:

(1) Historic locomotives powered by steam engines. For a locomotive that was originally manufactured after January 1, 1973 to be excluded under this paragraph (b)(1), it may not use any internal combustion engines and must be

used only for historical purposes such as at a museum or similar public attraction.

(2) Locomotives powered only by an external source of electricity.

(c) The requirements and prohibitions of this part apply only for locomotives that have become ''new'' (as defined in § 1033.901) on or after July 7, 2008.

(d) The provisions of this part do not apply for any auxiliary engine that only provides hotel power. In general, these engines are subject to the provisions of 40 CFR part 1039. However, depending on the engine cycle, model year and power rating, the engines may be subject to other regulatory parts instead.

(e) Manufacturers and owners of locomotives that operate only on nonstandard gauge rails may ask us to exclude such locomotives from this part by excluding them from the definition of ''locomotive''.

§ 1033.10 Organization of this part.

The regulations in this part 1033 contain provisions that affect locomotive manufacturers, remanufacturers, and others. However, the requirements of this part are generally addressed to the locomotive manufacturer/remanufacturer. The term ''you'' generally means the manufacturer/remanufacturer, as defined in § 1033.901. This part 1033 is divided into the following subparts:

(a) Subpart A of this part defines the applicability of part 1033 and gives an overview of regulatory requirements.

(b) Subpart B of this part describes the emission standards and other requirements that must be met to certify locomotives under this part. Note that § 1033.150 discusses certain interim requirements and compliance provisions that apply only for a limited time.

(c) Subpart C of this part describes how to apply for a certificate of conformity.

(d) Subpart D of this part describes general provisions for testing and auditing production locomotives.

(e) Subpart E of this part describes general provisions for testing in-use locomotives.

(f) Subpart F of this part and 40 CFR part 1065 describe how to test locomotives and engines.

(g) Subpart G of this part and 40 CFR part 1068 describe requirements, prohibitions, exemptions, and other provisions that apply to locomotive manufacturer/remanufacturers, owners, operators, and all others.

(h) Subpart H of this part describes how you may generate and use emission credits to certify your locomotives.

(i) Subpart I of this part describes provisions for locomotive owners and operators.

(j) Subpart J of this part contains definitions and other reference information.

§ 1033.15 Other regulation parts that apply for locomotives.

(a) Part 1065 of this chapter describes procedures and equipment specifications for testing engines to measure exhaust emissions. Subpart F of this part 1033 describes how to apply the provisions of part 1065 of this chapter to test locomotives to determine whether they meet the exhaust emission standards in this part.

(b) The requirements and prohibitions of part 1068 of this chapter apply to everyone, including anyone who manufactures, remanufactures, imports, maintains, owns, or operates any of the locomotives subject to this part 1033. See § 1033.601 to determine how to apply the part 1068 regulations for locomotives. Part 1068 of this chapter describes general provisions, including the following areas:

(1) Prohibited acts and penalties for locomotive manufacturer/remanufacturers and others.

(2) Exclusions and exemptions for certain locomotives.

(3) Importing locomotives.

(4) Selective enforcement audits of your production.

(5) Defect reporting and recall.

(6) Procedures for hearings.

(c) Other parts of this chapter apply if referenced in this part.

[73 FR 37197, June 30, 2008, as amended at 75 FR 22982, Apr. 30, 2010]

§ 1033.30 Submission of information.

(a) This part includes various requirements to record data or other information. Refer to § 1033.925 and 40 CFR 1068.25 regarding recordkeeping

requirements. Unless we specify otherwise, store these records in any format and on any media and keep them readily available for one year after you send an associated application for certification, or one year after you generate the data if they do not support an application for certification. You must promptly send us organized, written records in English if we ask for them. We may review them at any time.

(b) The regulations in § 1033.255 and 40 CFR 1068.101 describe your obligation to report truthful and complete information and the consequences of failing to meet this obligation. This includes information not related to certification.

(c) Send all reports and requests for approval to the Designated Compliance Officer (*see* § 1033.901).

(d) Any written information we require you to send to or receive from another company is deemed to be a required record under this section. Such records are also deemed to be submissions to EPA. We may require you to send us these records whether or not you are a certificate holder.

[75 FR 22982, Apr. 30, 2010]

Subpart B—Emission Standards and Related Requirements

§ 1033.101 Exhaust emission standards.

See §§ 1033.102 and 1033.150 to determine how the emission standards of this section apply before 2023.

(a) *Emission standards for line-haul locomotives.* Exhaust emissions from your new locomotives may not exceed the applicable emission standards in Table 1 to this section during the useful life of the locomotive. (NOTE: § 1033.901 defines locomotives to be ''new'' when originally manufactured and when remanufactured.) Measure emissions using the applicable test procedures described in subpart F of this part.

TABLE 1 TO § 1033.101—LINE-HAUL LOCOMOTIVE EMISSION STANDARDS

Year of original manufacture	Tier of standards	Standards (g/bhp-hr)			
		NO_X	PM	HC	CO
1973–1992 [a]	Tier 0 [b]	8.0	0.22	1.00	5.0
1993 [a]–2004	Tier 1 [b]	7.4	0.22	0.55	2.2
2005–2011	Tier 2 [b]	5.5	[e] 0.10	0.30	1.5
2012–2014	Tier 3 [c]	5.5	0.10	0.30	1.5
2015 or later	Tier 4 [d]	1.3	0.03	0.14	1.5

[a] Locomotive models that were originally manufactured in model years 1993 through 2001, but that were not originally equipped with a separate coolant system for intake air are subject to the Tier 0 rather than the Tier 1 standards.
[b] Line-haul locomotives subject to the Tier 0 through Tier 2 emission standards must also meet switch standards of the same tier.
[c] Tier 3 line-haul locomotives must also meet Tier 2 switch standards.
[d] Manufacturers may elect to meet a combined NO_X+HC standard of 1.4 g/bhp-hr instead of the otherwise applicable Tier 4 NO_X and HC standards, as described in paragraph (j) of this section.
[e] The PM standard for newly remanufactured Tier 2 line-haul locomotives is 0.20 g/bhp-hr until January 1, 2013, except as specified in § 1033.150(a).

(b) *Emission standards for switch locomotives.* Exhaust emissions from your new locomotives may not exceed the applicable emission standards in Table 2 to this section during the useful life of the locomotive. (Note: § 1033.901 defines locomotives to be ''new'' when originally manufactured and when remanufactured.) Measure emissions using the applicable test procedures described in subpart F of this part.

TABLE 2 TO § 1033.101—SWITCH LOCOMOTIVE EMISSION STANDARDS

Year of original manufacture	Tier of standards	Standards (g/bhp-hr)			
		NO_X	PM	HC	CO
1973–2001	Tier 0	11.8	0.26	2.10	8.0
2002–2004	Tier 1 [a]	11.0	0.26	1.20	2.5
2005–2010	Tier 2 [a]	8.1	[b] 0.13	0.60	2.4
2011–2014	Tier 3	5.0	0.10	0.60	2.4

TABLE 2 TO § 1033.101—SWITCH LOCOMOTIVE EMISSION STANDARDS—Continued

Year of original manufacture	Tier of standards	Standards (g/bhp-hr)			
		NO_X	PM	HC	CO
2015 or later	Tier 4	[c] 1.3	0.03	[c] 0.14	2.4

[a] Switch locomotives subject to the Tier 1 through Tier 2 emission standards must also meet line-haul standards of the same tier.
[b] The PM standard for new Tier 2 switch locomotives is 0.24 g/bhp-hr until January 1, 2013.
[c] Manufacturers may elect to meet a combined NO_X+HC standard of 1.4 g/bhp-hr instead of the otherwise applicable Tier 4 NO_X and HC standards, as described in paragraph (j) of this section.

(c) *Smoke standards.* The smoke opacity standards specified in Table 3 to this section apply only for locomotives certified to one or more PM standards or FELs greater than 0.05 g/bhp-hr. Smoke emissions, when measured in accordance with the provisions of Subpart F of this part, shall not exceed these standards.

TABLE 3 TO § 1033.101—SMOKE STANDARDS FOR LOCOMOTIVES (PERCENT OPACITY)

	Steady-state	30-sec peak	3-sec peak
Tier 0	30	40	50
Tier 1	25	40	50
Tier 2 and later	20	40	50

(d) *Averaging, banking, and trading.* You may generate or use emission credits under the averaging, banking, and trading (ABT) program as described in subpart H of this part to comply with the NO_X and/or PM standards of this part. You may also use ABT to comply with the Tier 4 HC standards of this part as described in paragraph (j) of this section. Generating or using emission credits requires that you specify a family emission limit (FEL) for each pollutant you include in the ABT program for each engine family. These FELs serve as the emission standards for the engine family with respect to all required testing instead of the standards specified in paragraphs (a) and (b) of this section. FELs may not be higher than the following limits:

(1) FELs for Tier 0 and Tier 1 locomotives originally manufactured before 2002 may have any value.

(2) FELs for Tier 1 locomotives originally manufactured 2002 through 2004 may not exceed 9.5 g/bhp-hr for NO_X emissions or 0.60 g/bhp-hr for PM emissions measured over the line-haul duty cycle. FELs for these locomotives may not exceed 14.4 g/bhp-hr for NO_X emissions or 0.72 g/bhp-hr for PM emissions measured over the switch duty cycle.

(3) FELs for Tier 2 and Tier 3 locomotives may not exceed the Tier 1 standards of this section.

(4) FELs for Tier 4 locomotives may not exceed the Tier 3 standards of this section.

(e) *Notch standards.* (1) Exhaust emissions from locomotives may not exceed the notch standards specified in paragraph (e)(2) of this section, except as allowed in paragraph (e)(3) of this section, when measured using any test procedures under any test conditions.

(2) Except as specified in paragraph (e)(5) of this section, calculate the applicable notch standards for each pollutant for each notch from the certified notch emission rate as follows:

$$\text{Notch standard} = (E_i) \times (1.1 + (1 - ELH_i/\text{std}))$$

Where:

E_i = The deteriorated brake-specific emission rate (for pollutant i) for the notch (i.e., the brake-specific emission rate calculated under subpart F of this part, adjusted by the deterioration factor in the application for certification); where i is NO_X, HC, CO or PM.

ELH_i = The deteriorated line-haul duty-cycle weighted brake-specific emission rate for pollutant i, as reported in the application for certification, except as specified in paragraph (e)(6) of this section.

std = The applicable line-haul duty-cycle standard/FEL, except as specified in paragraph (e)(6) of this section.

(3) Exhaust emissions that exceed the notch standards specified in paragraph (e)(2) of this section are allowed only if one of the following is true:

(i) The same emission controls are applied during the test conditions causing the noncompliance as were applied during certification test conditions (and to the same degree).

(ii) The exceedance result from a design feature that was described (including its effect on emissions) in the approved application for certification, and is:

(A) Necessary for safety;

(B) Addresses infrequent regeneration of an aftertreatment device; or

(C) Otherwise allowed by this part.

(4) Since you are only required to test your locomotive at the highest emitting dynamic brake point, the notch caps that you calculate for the dynamic brake point that you test also apply for other dynamic brake points.

(5) No PM notch caps apply for locomotives certified to a PM standard or FEL of 0.05 g/bhp-hr or lower.

(6) For switch locomotives that are not subject to line-haul standards, ELH^i equals the deteriorated switch duty-cycle weighted brake-specific emission rate for pollutant i and std is the applicable switch cycle standard/FEL.

(f) *Fuels*. The exhaust emission standards in this section apply for locomotives using the fuel type on which the locomotives in the engine family are designed to operate.

(1) You must meet the numerical emission standards for HC in this section based on the following types of hydrocarbon emissions for locomotives powered by the following fuels:

(i) Alcohol-fueled locomotives: THCE emissions for Tier 3 and earlier locomotives and NMHCE for Tier 4.

(ii) Gaseous-fueled locomotives: NMHC emissions.

(iii) Diesel-fueled and other locomotives: THC emissions for Tier 3 and earlier locomotives and NMHC for Tier 4. Note that manufacturers/remanufacturers may choose to not measure NMHC and assume that NMHC is equal to THC multiplied by 0.98 for diesel-fueled locomotives.

(2) You must certify your diesel-fueled locomotives to use the applicable grades of diesel fuel as follows:

(i) Certify your Tier 4 and later diesel-fueled locomotives for operation with only Ultra Low Sulfur Diesel (ULSD) fuel. Use ULSD as the test fuel for these locomotives.

(ii) Certify your Tier 3 and earlier diesel-fueled locomotives for operation with only ULSD fuel if they include sulfur-sensitive technology and you demonstrate compliance using a ULSD test fuel.

(iii) Certify your Tier 3 and earlier diesel-fueled locomotives for operation with either ULSD fuel or Low Sulfur Diesel (LSD) fuel if they do not include sulfur-sensitive technology or if you demonstrate compliance using an LSD test fuel (including commercial LSD fuel).

(iv) For Tier 1 and earlier diesel-fueled locomotives, if you demonstrate compliance using a ULSD test fuel, you must adjust the measured PM emissions upward by 0.01 g/bhp-hr to make them equivalent to tests with LSD. We will not apply this adjustment for our testing.

(g) *Useful life*. The emission standards and requirements in this subpart apply to the emissions from new locomotives for their useful life. The useful life is generally specified as MW-hrs and years, and ends when either of the values (MW-hrs or years) is exceeded or the locomotive is remanufactured.

(1) The minimum useful life in terms of MW-hrs is equal to the product of the rated horsepower multiplied by 7.50. The minimum useful life in terms of years is ten years. For locomotives originally manufactured before January 1, 2000 and not equipped with MW-hr meters, the minimum useful life is equal to 750,000 miles or ten years, whichever is reached first. See § 1033.140 for provisions related to rated power.

(2) You must specify a longer useful life if the locomotive or locomotive engine is designed to last longer than the applicable minimum useful life. Recommending a time to remanufacture that is longer than the minimum useful life is one indicator of a longer design life.

(3) Manufacturers/remanufacturers of locomotives with non-locomotive-specific engines (as defined in §1033.901) may ask us (before certification) to allow a shorter useful life for an engine family containing only non-locomotive-specific engines. We may approve a shorter useful life, in MW-hrs of locomotive operation but not in years, if we determine that these locomotives will rarely operate longer than the shorter useful life. If engines identical to those in the engine family have already been produced and are in use, your demonstration must include documentation from such in-use engines. In other cases, your demonstration must include an engineering analysis of information equivalent to such in-use data, such as data from research engines or similar engine models that are already in production. Your demonstration must also include any overhaul interval that you recommend, any mechanical warranty that you offer for the engine or its components, and any relevant customer design specifications. Your demonstration may include any other relevant information.

(4) Remanufacturers of locomotive or locomotive engine configurations that have been previously certified under paragraph (g)(3) of this section to a useful life that is shorter than the value specified in paragraph (g)(1) of this section may certify to that same shorter useful life value without request.

(5) In unusual circumstances, you may ask us to allow you to certify some locomotives in your engine family to a partial useful life. This allowance is limited to cases in which some or all of the locomotive's power assemblies have been operated previously such that the locomotive will need to be remanufactured prior to the end of the otherwise applicable useful life. Unless we specify otherwise, define the partial useful life based on the total MW-hrs since the last remanufacture to be consistent with other locomotives in the family. For example, this may apply for a previously uncertified locomotive that becomes ''new'' when it is imported, but that was remanufactured two years earlier (representing 25 percent of the normal useful life period). If such a locomotive could be brought into compliance with the applicable standards without being remanufactured, you may ask to include it in your engine family for the remaining 75 percent of its useful life period.

(h) *Applicability for testing.* The emission standards in this subpart apply to all testing, including certification testing, production-line testing, and in-use testing.

(i) *Alternate CO standards.* Manufacturers/remanufacturers may certify Tier 0, Tier 1, or Tier 2 locomotives to an alternate CO emission standard of 10.0 g/bhp-hr instead of the otherwise applicable CO standard if they also certify those locomotives to alternate PM standards less than or equal to one-half of the otherwise applicable PM standard. For example, a manufacturer certifying Tier 1 locomotives to a 0.11 g/bhp-hr PM standard may certify those locomotives to the alternate CO standard of 10.0 g/bhp-hr.

(j) *Alternate* NO_X+HC standards for Tier 4. Manufacturers/remanufacturers may use credits accumulated through the ABT program to certify Tier 4 locomotives to an alternate NO_X+HC emission standard of 1.4 g/bhp-hr (instead of the otherwise applicable NO_X and NMHC standards). You may use NO_X credits to show compliance with this standard by certifying your family to a NO_X+HC FEL. Calculate the NO_X credits needed as specified in subpart H of this part using the NO_X+HC emission standard and FEL in the calculation instead of the otherwise applicable NO_X standard and FEL. You may not generate credits relative to the alternate standard or certify to the standard without using credits.

(k) *Upgrading.* Upgraded locomotives that were originally manufactured prior to January 1, 1973 are subject to the Tier 0 standards. (See the definition of upgrade in §1033.901.)

(l) *Other optional standard provisions.* Locomotives may be certified to a higher tier of standards than would otherwise be required. Tier 0 switch locomotives may be certified to both the line-haul and switch cycle standards. In both cases, once the locomotives become subject to the additional standards, they remain subject to those

standards for the remainder of their service lives.

[73 FR 37197, June 30, 2008, as amended at 73 FR 59188, Oct. 8, 2008; 75 FR 22982, Apr. 30, 2010]

§ 1033.102 Transition to the standards of this part.

(a) Except as specified in § 1033.150(a), the Tier 0 and Tier 1 standards of § 1033.101 apply for new locomotives beginning January 1, 2010, except as specified in § 1033.150(a). The Tier 0 and Tier 1 standards of 40 CFR part 92 apply for earlier model years.

(b) Except as specified in § 1033.150(a), the Tier 2 standards of § 1033.101 apply for new locomotives beginning January 1, 2013. The Tier 2 standards of 40 CFR part 92 apply for earlier model years.

(c) The Tier 3 and Tier 4 standards of § 1033.101 apply for the model years specified in that section.

§ 1033.110 Emission diagnostics—general requirements.

The provisions of this section apply if you equip your locomotives with a diagnostic system that will detect significant malfunctions in their emission-control systems and you choose to base your emission-related maintenance instructions on such diagnostics. See § 1033.420 for information about how to select and maintain diagnostic-equipped locomotives for in-use testing. Notify the owner/operator that the presence of this diagnostic system affects their maintenance obligations under § 1033.815. Except as specified in § 1033.112, this section does not apply for diagnostics that you do not include in your emission-related maintenance instructions. The provisions of this section address diagnostic systems based on malfunction-indicator lights (MILs). You may ask to use other indicators instead of MILs.

(a) The MIL must be readily visible to the operator. When the MIL goes on, it must display ''Check Emission Controls'' or a similar message that we approve. You may use sound in addition to the light signal.

(b) To ensure that owner/operators consider MIL illumination seriously, you may not illuminate it for malfunctions that would not otherwise require maintenance. This section does not limit your ability to display other indicator lights or messages, as long as they are clearly distinguishable from MILs affecting the owner/operator's maintenance obligations under § 1033.815.

(c) Control when the MIL can go out. If the MIL goes on to show a malfunction, it must remain on during all later engine operation until servicing corrects the malfunction. If the engine is not serviced, but the malfunction does not recur during the next 24 hours, the MIL may stay off during later engine operation.

(d) Record and store in computer memory any diagnostic trouble codes showing a malfunction that should illuminate the MIL. The stored codes must identify the malfunctioning system or component as uniquely as possible. Make these codes available through the data link connector as described in paragraph (e) of this section. You may store codes for conditions that do not turn on the MIL. The system must store a separate code to show when the diagnostic system is disabled (from malfunction or tampering). Provide instructions to the owner/operator regarding how to interpret malfunction codes.

(e) Make data, access codes, and devices accessible. Make all required data accessible to us without any access codes or devices that only you can supply. Ensure that anyone servicing your locomotive can read and understand the diagnostic trouble codes stored in the onboard computer with generic tools and information.

(f) Follow standard references for formats, codes, and connections.

§ 1033.112 Emission diagnostics for SCR systems.

Engines equipped with SCR systems using separate reductant tanks must also meet the requirements of this section in addition to the requirements of § 1033.110. This section does not apply for SCR systems using the engine's fuel as the reductant.

(a) The diagnostic system must monitor reductant quality and tank levels and alert operators to the need to refill the reductant tank before it is empty, or to replace the reductant if it does

not meet your concentration specifications. Unless we approve other alerts, use a malfunction-indicator light (MIL) as specified in § 1033.110 and an audible alarm. You do not need to separately monitor reductant quality if you include an exhaust NO_X sensor (or other sensor) that allows you to determine inadequate reductant quality. However, tank level must be monitored in all cases.

(b) Your onboard computer must record in nonvolatile computer memory all incidents of engine operation with inadequate reductant injection or reductant quality. It must record the total amount of operation without adequate reductant. It may total the operation by hours, work, or excess NO_X emissions.

§ 1033.115 Other requirements.

Locomotives that are required to meet the emission standards of this part must meet the requirements of this section. These requirements apply when the locomotive is new (for freshly manufactured or remanufactured locomotives) and continue to apply throughout the useful life.

(a) *Crankcase emissions.* Crankcase emissions may not be discharged directly into the ambient atmosphere from any locomotive, except as follows:

(1) Locomotives may discharge crankcase emissions to the ambient atmosphere if the emissions are added to the exhaust emissions (either physically or mathematically) during all emission testing. If you take advantage of this exception, you must do both of the following things:

(i) Manufacture the locomotives so that all crankcase emissions can be routed into the applicable sampling systems specified in 40 CFR part 1065, consistent with good engineering judgment.

(ii) Account for deterioration in crankcase emissions when determining exhaust deterioration factors.

(2) For purposes of this paragraph (a), crankcase emissions that are routed to the exhaust upstream of exhaust aftertreatment during all operation are not considered to be discharged directly into the ambient atmosphere.

(b) *Adjustable parameters.* Locomotives that have adjustable parameters must meet all the requirements of this part for any adjustment in the approved adjustable range. You must specify in your application for certification the adjustable range of each adjustable parameter on a new locomotive or new locomotive engine to:

(1) Ensure that safe locomotive operating characteristics are available within that range, as required by section 202(a)(4) of the Clean Air Act (42 U.S.C. 7521(a)(4)), taking into consideration the production tolerances.

(2) Limit the physical range of adjustability to the maximum extent practicable to the range that is necessary for proper operation of the locomotive or locomotive engine.

(c) *Prohibited controls.* You may not design or produce your locomotives with emission control devices, systems, or elements of design that cause or contribute to an unreasonable risk to public health, welfare, or safety while operating. For example, this would apply if the locomotive emits a noxious or toxic substance it would otherwise not emit that contributes to such an unreasonable risk.

(d) *Evaporative and refueling controls.* For locomotives fueled with a volatile fuel you must design and produce them to minimize evaporative emissions during normal operation, including periods when the engine is shut down. You must also design and produce them to minimize the escape of fuel vapors during refueling. Hoses used to refuel gaseous-fueled locomotives may not be designed to be bled or vented to the atmosphere under normal operating conditions. No valves or pressure relief vents may be used on gaseous-fueled locomotives except as emergency safety devices that do not operate at normal system operating flows and pressures.

(e) *Altitude requirements.* All locomotives must be designed to include features that compensate for changes in altitude so that the locomotives will comply with the applicable emission standards when operated at any altitude less than:

(1) 7000 feet above sea level for line-haul locomotives.

(2) 5500 feet above sea level for switch locomotives.

(f) *Defeat devices.* You may not equip your locomotives with a defeat device.

A defeat device is an auxiliary emission control device (AECD) that reduces the effectiveness of emission controls under conditions that the locomotive may reasonably be expected to encounter during normal operation and use.

(1) This does not apply to AECDs you identify in your application for certification if any of the following is true:

(i) The conditions of concern were substantially included in the applicable duty cycle test procedures described in subpart F of this part.

(ii) You show your design is necessary to prevent locomotive damage or accidents.

(iii) The reduced effectiveness applies only to starting the locomotive.

(iv) The locomotive emissions when the AECD is functioning are at or below the notch caps of § 1033.101.

(2) This does not apply to AECDs related to hotel mode that conform to the specifications of this paragraph (f)(2). This provision is intended for AECDs that have the primary function of operating the engine at a different speed than would be done to generate the same propulsive power when not operating in hotel mode. Identify and describe these AECDs in your application for certification. We may allow the AECDs to modify engine calibrations where we determine that such modifications are environmentally beneficial or needed for proper engine function. You must obtain preliminary approval under § 1033.210 before incorporating such modifications. Otherwise, you must apply the same injection timing and intake air cooling strategies in hotel mode and non-hotel mode.

(g) *Idle controls*. All new locomotives must be equipped with automatic engine stop/start as described in this paragraph (g). All new locomotives must be designed to allow the engine(s) to be restarted at least six times per day without causing engine damage that would affect the expected interval between remanufacturing. Note that it is a violation of 40 CFR 1068.101(b)(1) to circumvent the provisions of this paragraph (g).

(1) Except as allowed by paragraph (g)(2) of this section, the stop/start systems must shut off the main locomotive engine(s) after 30 minutes of idling (or less).

(2) Stop/start systems may restart or continue idling for the following reasons:

(i) To prevent engine damage such as to prevent the engine coolant from freezing.

(ii) To maintain air pressure for brakes or starter system, or to recharge the locomotive battery.

(iii) To perform necessary maintenance.

(iv) To otherwise comply with federal regulations.

(3) You may ask to use alternate stop/start systems that will achieve equivalent idle control.

(4) See § 1033.201 for provisions that allow you to obtain a separate certificate for idle controls.

(5) It is not considered circumvention to allow a locomotive to idle to heat or cool the cab, provided such heating or cooling is necessary.

(h) *Power meters*. Tier 1 and later locomotives must be equipped with MW-hr meters (or the equivalent) consistent with the specifications of § 1033.140.

[73 FR 37197, June 30, 2008, as amended at 73 FR 59189, Oct. 8, 2008; 75 FR 22982, Apr. 30, 2010]

§ 1033.120 Emission-related warranty requirements.

(a) *General requirements*. Manufacturers/remanufacturers must warrant to the ultimate purchaser and each subsequent purchaser that the new locomotive, including all parts of its emission control system, meets two conditions:

(1) It is designed, built, and equipped so it conforms at the time of sale to the ultimate purchaser with the requirements of this part.

(2) It is free from defects in materials and workmanship that may keep it from meeting these requirements.

(b) *Warranty period*. Except as specified in this paragraph, the minimum warranty period is one-third of the useful life. Your emission-related warranty must be valid for at least as long as the minimum warranty periods listed in this paragraph (b) in MW-hrs of

operation (or miles for Tier 0 locomotives not equipped with MW-hr meters) and years, whichever comes first. You may offer an emission-related warranty more generous than we require. The emission-related warranty for the locomotive may not be shorter than any published warranty you offer without charge for the locomotive. Similarly, the emission-related warranty for any component may not be shorter than any published warranty you offer without charge for that component. If you provide an extended warranty to individual owners for any components covered in paragraph (c) of this section for an additional charge, your emission-related warranty must cover those components for those owners to the same degree. If the locomotive does not record MW-hrs, we base the warranty periods in this paragraph (b) only on years. The warranty period begins when the locomotive is placed into service, or back into service after remanufacture.

(c) *Components covered.* The emission-related warranty covers all components whose failure would increase a locomotive's emissions of any regulated pollutant. This includes components listed in 40 CFR part 1068, Appendix I, and components from any other system you develop to control emissions. The emission-related warranty covers the components you sell even if another company produces the component. Your emission-related warranty does not need to cover components whose failure would not increase a locomotive's emissions of any regulated pollutant. For remanufactured locomotives, your emission-related warranty is required to cover only those parts that you supply or those parts for which you specify allowable part manufacturers. It does not need to cover used parts that are not replaced during the remanufacture.

(d) *Limited applicability.* You may deny warranty claims under this section if the operator caused the problem through improper maintenance or use, as described in 40 CFR 1068.115.

(e) *Owners manual.* Describe in the owners manual the emission-related warranty provisions from this section that apply to the locomotive.

[73 FR 37197, June 30, 2008, as amended at 73 FR 59189, Oct. 8, 2008; 75 FR 22983, Apr. 30, 2010]

§ 1033.125 Maintenance instructions.

Give the owner of each new locomotive written instructions for properly maintaining and using the locomotive, including the emission-control system. Include in the instructions a notification that owners and operators must comply with the requirements of subpart I of this part 1033. The emission-related maintenance instructions also apply to any service accumulation on your emission-data locomotives, as described in § 1033.245 and in 40 CFR part 1065. If you equip your locomotives with a diagnostic system that will detect significant malfunctions in their emission-control systems, specify the extent to which your emission-related maintenance instructions include such diagnostics.

§ 1033.130 Instructions for engine remanufacturing or engine installation.

(a) If you do not complete assembly of the new locomotive (such as selling a kit that allows someone else to remanufacture a locomotive under your certificate), give the assembler instructions for completing assembly consistent with the requirements of this part. Include all information necessary to ensure that the locomotive will be assembled in its certified configuration.

(b) Make sure these instructions have the following information:

(1) Include the heading: ''Emission-related assembly instructions''

(2) Describe any instructions necessary to make sure the assembled locomotive will operate according to design specifications in your application for certification.

(3) Describe how to properly label the locomotive. This will generally include instructions to remove and destroy the previous Engine Emission Control Information label.

(4) State one of the following as applicable:

(i) ''Failing to follow these instructions when remanufacturing a locomotive or locomotive engine violates federal law (40 CFR 1068.105(b)), and may subject you to fines or other penalties as described in the Clean Air Act.''

(ii) ''Failing to follow these instructions when installing this locomotive engine violates federal law (40 CFR 1068.105(b)), and may subject you to fines or other penalties as described in the Clean Air Act.''

(c) You do not need installation instructions for locomotives you assemble.

(d) Provide instructions in writing or in an equivalent format. For example, you may post instructions on a publicly available Web site for downloading or printing. If you do not provide the instructions in writing, explain in your application for certification how you will ensure that each assembler is informed of the assembly requirements.

(e) Your emission-related assembly instructions may not include specifications for parts unrelated to emissions. For the basic mechanical parts listed in this paragraph (e), you may not specify a part manufacturer unless we determine that such a specification is necessary. You may include design specifications for such parts addressing the dimensions and material constraints as necessary. You may also specify a part number, as long you make it clear that alternate part suppliers may be used. This paragraph (e) covers the following parts or other parts we determine qualify as basic mechanical parts:

(1) Intake and exhaust valves.

(2) Intake and exhaust valve retainers.

(3) Intake and exhaust valve springs.

(4) Intake and exhaust valve rotators.

(5) Oil coolers.

§ 1033.135 Labeling.

As described in this section, each locomotive must have a label on the locomotive and a separate label on the engine. The label on the locomotive stays on the locomotive throughout its service life. It generally identifies the original certification of the locomotive, which is when it was originally manufactured for Tier 1 and later locomotives. The label on the engine is replaced each time the locomotive is remanufactured and identifies the most recent certification.

(a) *Serial numbers.* At the point of original manufacture, assign each locomotive and each locomotive engine a serial number or other unique identification number and permanently affix, engrave, or stamp the number on the locomotive and engine in a legible way.

(b) *Locomotive labels.* (1) Locomotive labels meeting the specifications of paragraph (b)(2) of this section must be applied as follows:

(i) The manufacturer must apply a locomotive label at the point of original manufacture.

(ii) The remanufacturer must apply a locomotive label at the point of original remanufacture, unless the locomotive was labeled by the original manufacturer.

(iii) Any remanufacturer certifying a locomotive to an FEL or standard different from the previous FEL or standard to which the locomotive was previously certified must apply a locomotive label.

(2) The locomotive label must meet all of the following criteria:

(i) The label must be permanent and legible and affixed to the locomotive in a position in which it will remain readily visible. Attach it to a locomotive chassis part necessary for normal operation and not normally requiring replacement during the service life of the locomotive. You may not attach this label to the engine or to any equipment that is easily detached from the locomotive. Attach the label so that it cannot be removed without destroying or defacing the label. For Tier 0 and Tier 1 locomotives, the label may be made up of more than one piece, as long as all pieces are permanently attached to the locomotive.

(ii) The label must be lettered in the English language using a color that contrasts with the background of the label.

(iii) The label must include all the following information:

(A) The label heading: ''ORIGINAL LOCOMOTIVE EMISSION CONTROL INFORMATION.'' Manufacturers/remanufacturers may add a subheading

to distinguish this label from the engine label described in paragraph (c) of this section.

(B) Full corporate name and trademark of the manufacturer (or remanufacturer).

(C) The applicable engine family and configuration identification. In the case of locomotive labels applied by the manufacturer at the point of original manufacture, this will be the engine family and configuration identification of the certificate applicable to the freshly manufactured locomotive. In the case of locomotive labels applied by a remanufacturer during remanufacture, this will be the engine family and configuration identification of the certificate under which the remanufacture is being performed.

(D) Date of original manufacture of the locomotive, as defined in § 1033.901.

(E) The standards/FELs to which the locomotive was certified and the following statement: ''THIS LOCOMOTIVE MUST COMPLY WITH THESE EMISSION LEVELS EACH TIME THAT IT IS REMANUFACTURED, EXCEPT AS ALLOWED BY 40 CFR 1033.750.''

(3) Label diesel-fueled locomotives near the fuel inlet to identify the allowable fuels, consistent with § 1033.101. For example, Tier 4 locomotives should be labeled ''ULTRA LOW SULFUR DIESEL FUEL ONLY''. You do not need to label Tier 3 and earlier locomotives certified for use with both LSD and ULSD.

(c) *Engine labels.* (1) For engines not requiring aftertreatment devices, apply engine labels meeting the specifications of paragraph (c)(2) of this section once an engine has been assembled in its certified configuration. For engines that require aftertreatment devices, apply the label after the engine has been fully assembled, which may occur before installing the aftertreatment devices. These labels must be applied by:

(i) The manufacturer at the point of original manufacture; and

(ii) The remanufacturer at the point of each remanufacture (including the original remanufacture and subsequent remanufactures).

(2) The engine label must meet all of the following criteria:

(i) The label must be durable throughout the useful life of the engine, be legible and affixed to the engine in a position in which it will be readily visible after installation of the engine in the locomotive. Attach it to an engine part necessary for normal operation and not normally requiring replacement during the useful life of the locomotive. You may not attach this label to any equipment that is easily detached from the engine. Attach the label so it cannot be removed without destroying or defacing the label. The label may be made up of more than one piece, as long as all pieces are permanently attached to the same engine part.

(ii) The label must be lettered in the English language using a color that contrasts with the background of the label.

(iii) The label must include all the following information:

(A) The label heading: ''ENGINE EMISSION CONTROL INFORMATION.'' Manufacturers/remanufacturers may add a subheading to distinguish this label from the locomotive label described in paragraph (b) of this section.

(B) Full corporate name and trademark of the manufacturer/remanufacturer.

(C) Engine family and configuration identification as specified in the certificate under which the locomotive is being manufactured or remanufactured.

(D) A prominent unconditional statement of compliance with U.S. Environmental Protection Agency regulations which apply to locomotives, as applicable:

(*1*) ''This locomotive conforms to U.S. EPA regulations applicable to Tier 0+ switch locomotives.''

(*2*) ''This locomotive conforms to U.S. EPA regulations applicable to Tier 0+ line-haul locomotives.''

(*3*) ''This locomotive conforms to U.S. EPA regulations applicable to Tier 1+ locomotives.''

(*4*) ''This locomotive conforms to U.S. EPA regulations applicable to Tier 2+ locomotives.''

(*5*) ''This locomotive conforms to U.S. EPA regulations applicable to Tier 3 switch locomotives.''

(*6*) ''This locomotive conforms to U.S. EPA regulations applicable to Tier 3 line-haul locomotives.''

(*7*) ''This locomotive conforms to U.S. EPA regulations applicable to Tier 4 switch locomotives.''

(*8*) ''This locomotive conforms to U.S. EPA regulations applicable to Tier 4 line-haul locomotives.''

(E) The useful life of the locomotive.

(F) The standards/FELS to which the locomotive was certified.

(iv) You may include other critical operating instructions such as specifications for adjustments or reductant use for SCR systems.

(d) You may add information to the emission control information label as follows:

(1) You may identify other emission standards that the engine/locomotive meets or does not meet (such as international standards). You may include this information by adding it to the statement we specify or by including a separate statement.

(2) You may add other information to ensure that the locomotive will be properly maintained and used.

(3) You may add appropriate features to prevent counterfeit labels. For example, you may include the engine's unique identification number on the label.

(e) You may ask us to approve modified labeling requirements in this part 1033 if you show that it is necessary or appropriate. We will approve your request if your alternate label is consistent with the requirements of this part.

[73 FR 37197, June 30, 2008, as amended at 73 FR 59189, Oct. 8, 2008]

§ 1033.140 Rated power.

This section describes how to determine the rated power of a locomotive for the purposes of this part.

(a) A locomotive configuration's rated power is the maximum brake power point on the nominal power curve for the locomotive configuration, as defined in this section. See § 1033.901 for the definition of brake power. Round the power value to the nearest whole horsepower. Generally, this will be the brake power of the engine in notch 8.

(b) The nominal power curve of a locomotive configuration is its maximum available brake power at each possible operator demand setpoint or ''notch''. See 40 CFR 1065.1001 for the definition of operator demand. The maximum available power at each operator demand setpoint is based on your design and production specifications for that locomotive. The nominal power curve does not include any operator demand setpoints that are not achievable during in-use operation. For example, for a locomotive with only eight discrete operator demand setpoints, or notches, the nominal power curve would be a series of eight power points versus notch, rather than a continuous curve.

(c) The nominal power curve must be within the range of the actual power curves of production locomotives considering normal production variability. If after production begins it is determined that your nominal power curve does not represent production locomotives, we may require you to amend your application for certification under § 1033.225.

(d) For the purpose of determining useful life, you may need to use a rated power based on power other than brake power according to the provisions of this paragraph (d). The useful life must be based on the power measured by the locomotive's megawatt-hour meter. For example, if your megawatt-hour meter reads and records the electrical work output of the alternator/generator rather than the brake power of the engine, and the power output of the alternator/generator at notch 8 is 4000 horsepower, calculate your useful life as 30,000MW-hrs (7.5×4000).

§ 1033.150 Interim provisions.

The provisions of this section apply instead of other provisions of this part for a limited time. This section describes when these provisions apply.

(a) *Early availability of Tier 0, Tier 1, or Tier 2 systems.* Except as specified in paragraph (a)(2) of this section, for model years 2008 and 2009, you may remanufacture locomotives to meet the applicable standards in 40 CFR part 92 only if no remanufacture system has been certified to meet the standards of

this part and is available at a reasonable cost at least 90 days prior to the completion of the remanufacture as specified in paragraph (a)(3) of this section. This same provision continues to apply after 2009, but only for Tier 2 locomotives. Note that remanufacturers may certify remanufacturing systems that will not be available at a reasonable cost; however such certification does not trigger the requirements of this paragraph (a).

(1) For the purpose of this paragraph (a), ''available at a reasonable cost'' means available for use where all of the following are true:

(i) The total incremental cost to the owner and operators of the locomotive due to meeting the new standards (including initial hardware, increased fuel consumption, and increased maintenance costs) during the useful life of the locomotive is less than $250,000, adjusted as specified in paragraph (a)(4)(i) of this section.

(ii) The initial incremental hardware costs are reasonably related to the technology included in the remanufacturing system and are less than $125,000, adjusted as specified in paragraph (a)(4)(i) of this section.

(iii) The remanufactured locomotive will have reliability throughout its useful life that is similar to the reliability the locomotive would have had if it had been remanufactured without the certified remanufacture system.

(iv) The remanufacturer must demonstrate at the time of certification that the system meets the requirements of this paragraph (a)(1).

(v) The system does not generate or use emission credits.

(2) The number of locomotives that each railroad must remanufacture under this paragraph (a) is capped as follows:

(i) For the period October 3, 2008 to December 31, 2008, the maximum number of locomotives that a railroad must remanufacture under this paragraph (a) is 50 percent of the total number of the railroad's locomotives that are remanufactured during this period under this part or 40 CFR part 92. Include in the calculation both locomotives you own and locomotives you lease.

(ii) For the period January 1, 2009 to December 31, 2009, the maximum number of locomotives that a railroad must remanufacture under this paragraph (a) is 70 percent of the total number of the railroad's locomotives that are remanufactured during this period under this part or 40 CFR part 92. Include in the calculation both locomotives you own and locomotives you lease.

(3) Remanufacturers applying for certificates under this paragraph (a) are responsible to notify owner/operators (and other customers as applicable) that they have requested such certificates. The notification should occur at the same time that the remanufacturer submits its application, and should include a description of the remanufacturing system, price, expected incremental operating costs, and draft copies of your installation and maintenance instructions. The system is considered to be available for a customer 120 days after this notification, or 90 days after the certificate is issued, whichever is later. Where we issue a certificate of conformity under this part based on carryover data from an engine family that we previously considered available for the configuration, the system is considered to be available when we issue the certificate.

(4) Estimate costs as follows:

(i) The cost limits described in paragraph (a)(1) of this section are specified in terms of 2007 dollars. Adjust these values for future years according to the following equation:

$$\text{Actual Limit} = (\text{2007 Limit}) \times [(0.6000) \times (\text{Commodity Index}) + (0.4000) \times (\text{Earnings Index})]$$

Where:

2007 Limit = The value specified in paragraph (a)(1) of this section ($250,000 or $125,000).

Commodity Index = The U.S. Bureau of Labor Statistics Producer Price Index for Industrial Commodities Less Fuel (Series WPU03T15M05) for the month prior to the date you submit your application divided by 173.1.

Earnings Index = The U.S. Bureau of Labor Statistics Estimated Average Hourly Earnings of Production Workers for Durable Manufacturing (Series CES3100000008) for the month prior to the date you submit your application divided by 18.26.

(ii) Calculate all costs in current dollars (for the month prior to the date you submit your application). Calculate fuel costs based on a fuel price

adjusted by the Association of American Railroads' monthly railroad fuel price index (P), which is available at *https://www.aar.org//media/AAR/RailCostIndexes/Index_MonthlyFuelPrices.ashx*. (Use the value for the column in which P equals 539.8 for November 2007.) Calculate a new fuel price using the following equation:

Fuel Price = ($2.76 per gallon) × (P/539.8)

(b) *Idle controls*. A locomotive equipped with an automatic engine stop/start system that was originally installed before January 1, 2009 and that conforms to the requirements of § 1033.115(g) is deemed to be covered by a certificate of conformity with respect to the requirements of § 1033.115(g). Note that the provisions of subpart C of this part also allow you to apply for a conventional certificate of conformity for such systems.

(c) *Locomotive labels for transition to new standards*. This paragraph (c) applies when you remanufacture a locomotive that was previously certified under 40 CFR part 92. You must remove the old locomotive label and replace it with the locomotive label specified in § 1033.135.

(d) *Small manufacturer/remanufacturer provisions*. The production-line testing requirements and in-use testing requirements of this part do not apply until January 1, 2013 for manufacturers/remanufacturers that qualify as small manufacturers under § 1033.901.

(e) *Producing switch locomotives using certified nonroad engines*. You may use the provisions of this paragraph (e) to produce any number of freshly manufactured or refurbished switch locomotives in model years 2008 through 2017. Locomotives produced under this paragraph (e) are exempt from the standards and requirements of this part and 40 CFR part 92 subject to the following provisions:

(1) All of the engines on the switch locomotive must be covered by a certificate of conformity issued under 40 CFR part 89 or 1039 for model year 2008 or later (or earlier model years if the same standards applied as in 2008). Engines over 750 hp certified to the Tier 4 standards for non-generator set engines are not eligible for this allowance after 2014.

(2) You must reasonably project that more of the engines will be sold and used for non-locomotive use than for use in locomotives.

(3) You may not generate or use locomotive credits under this part for these locomotives.

(4) Include the following statement on a permanent locomotive label: ''THIS LOCOMOTIVE WAS CERTIFIED UNDER 40 CFR 1033.150(e). THE ENGINES USED IN THIS LOCOMOTIVE ARE SUBJECT TO REQUIREMENTS OF 40 CFR PARTS 1039 (or 89) AND 1068.''

(5) The rebuilding requirements of 40 CFR part 1068 apply when remanufacturing engines used in these locomotives.

(f) *In-use compliance limits*. For purposes of determining compliance other than for certification or production-line testing, calculate the applicable in-use compliance limits by adjusting the applicable standards/FELs. The PM adjustment applies only for model year 2017 and earlier locomotives and does not apply for locomotives with a PM FEL higher than 0.03 g/bhp-hr. The NO_X adjustment applies only for model year 2017 and earlier locomotives and does not apply for locomotives with a NO_X FEL higher than 2.0 g/bhp-hr. Add the applicable adjustments in Tables 1 or 2 of this section (which follow) to the otherwise applicable standards (or FELs) and notch caps. You must specify during certification which add-ons, if any, will apply for your locomotives.

TABLE 1 TO § 1033.150—IN-USE ADJUSTMENTS FOR TIER 4 LOCOMOTIVES

Fraction of useful life already used	In-use adjustments (g/bhp-hr)	
	For model year 2017 and earlier Tier 4 NO_X standards	For model year 2017 and earlier Tier 4 PM standards
0 < MW-hrs ≤ 50% of UL	0.7	0.01

TABLE 1 TO § 1033.150—IN-USE ADJUSTMENTS FOR TIER 4 LOCOMOTIVES—Continued

Fraction of useful life already used	In-use adjustments (g/bhp-hr)	
	For model year 2017 and earlier Tier 4 NO_X standards	For model year 2017 and earlier Tier 4 PM standards
50 < MW-hrs ≤ 75% of UL	1.0	0.01
MW-hrs > 75% of UL	1.3	0.01

TABLE 2 TO § 1033.150—OPTIONAL IN-USE ADJUSTMENTS FOR TIER 4 LOCOMOTIVES

Fraction of useful life already used	In-use adjustments (g/bhp-hr)	
	For model year 2017 and earlier Tier 4 NO_X standards	For model year 2017 and earlier Tier 4 PM standards
0 < MW-hrs ≤ 50% of UL	0.2	0.03
50 < MW-hrs ≤ 75% of UL	0.3	0.03
MW-hrs > 75% of UL	0.4	0.03

(g) Optional interim Tier 4 compliance provisions for NO_X emissions. For model years 2015 through 2022, manufacturers may choose to certify some or all of their Tier 4 line-haul engine families according to the optional compliance provisions of this paragraph (g). The following provisions apply to all locomotives in those families:

(1) The provisions of this paragraph (g) apply instead of the deterioration factor requirements of §§ 1033.240 and 1033.245 for NO_X emissions. You must certify that the locomotives in the engine family will conform to the requirements of this paragraph (g) for their full useful lives.

(2) The applicable NO_X emission standard for locomotives certified under this paragraph (g) is:

(i) 1.3 g/bhp-hr for locomotives that have accumulated less than 50 hours of operation.

(ii) 1.3 plus 0.6 g/bhp-hr for locomotives that have accumulated 50 hours or more of operation.

(3) The engine family may not generate NO_X emission credits.

(4) The design certification provisions of § 1033.240(c) do not apply for these locomotives for the next remanufacture.

(5) Manufacturers must comply with the production-line testing program in subpart D of this part for these engine families or the following optional program:

(i) You are not required to test locomotives in the family under subpart D of this part if you comply with the requirements of this paragraph (g)(5).

(ii) Test the locomotives as specified in subpart E of this part, with the following exceptions:

(A) The minimum test sample size is one percent of the number of locomotives in the family or five, whichever is less.

(B) The locomotives must be tested after they have accumulated 50 hours or more of operation but before they have reached 50 percent of their useful life.

(iii) The standards in this part for pollutants other than NO_X apply as specified for testing conducted under this optional program.

(6) The engine family may use NO_X emission credits to comply with this paragraph (g). However, a 1.5 g/bhp-hr NO_X FEL cap applies for engine families certified under this paragraph (g). The applicable standard for locomotives that have accumulated 50 hours or more of operation is the FEL plus 0.6 g/bhp-hr.

(7) The in-use NO_X add-ons specified in paragraph (f) of this section do not apply for these locomotives.

(8) All other provisions of this part apply to such locomotives, except as specified otherwise in this paragraph (g).

(h) *Test procedures*. You are generally required to use the test procedures

specified in subpart F of this part (including the applicable test procedures in 40 CFR part 1065). As specified in this paragraph (h), you may use a combination of the test procedures specified in this part and the test procedures specified in 40 CFR part 92 prior to January 1, 2015. After this date, you must use only the test procedures specified in this part.

(1) Prior to January 1, 2015, you may ask to use some or all of the procedures specified in 40 CFR part 92 for locomotives certified under this part 1033.

(2) If you ask to rely on a combination of procedures under this paragraph (h), we will approve your request only if you show us that it does not affect your ability to demonstrate compliance with the applicable emission standards. Generally this requires that the combined procedures would result in emission measurements at least as high as those that would be measured using the procedures specified in this part. Alternatively, you may demonstrate that the combined effects of the different procedures is small relative to your compliance margin (the degree to which your emissions are below the applicable standards).

(i) *Certification testing*. Prior to model year 2014, you may use the simplified steady-state engine test procedure specified in this paragraph (i) for certification testing. The normal certification procedures and engine testing procedures apply, except as specified in this paragraph (i).

(1) Use good engineering judgment to operate the engine consistent with its expected operation in the locomotive, to the extent practical. You are not required to exactly replicate the transient behavior of the engine.

(2) You may delay sampling during notch transition for up to 20 seconds after you begin the notch change.

(3) We may require you provide additional information in your application for certification to support the expectation that production locomotives will meet all applicable emission standards when tested as locomotives.

(4) You may not use this simplified procedure for production-line or in-use testing.

(j) *Administrative requirements*. For model years 2008 and 2009, you may use a combination of the administrative procedures specified in this part and the test procedures specified in 40 CFR part 92. For example, this would allow you to use the certification procedures of 40 CFR part 92 to apply for certificates under this part 1033.

(k) *Test fuels*. Testing performed during calendar years 2008 and 2009 may be performed using test fuels that meet the specifications of 40 CFR 92.113. If you do, adjust PM emissions downward by 0.04 g/bhp-hr to account for the difference in sulfur content of the fuel.

(l) *Refurbished switch locomotives*. In 2008 and 2009 remanufactured Tier 0 switch locomotives that are deemed to be refurbished may be certified as remanufactured switch locomotives under 40 CFR part 92.

(m) *Assigned deterioration factors*. The provisions of this paragraph (m) apply for Tier 0 and Tier 1 locomotives to the standards of this part during model years 2008 or 2009. Remanufacturers certifying such locomotives to the standards of this part during these model years may use an assigned deterioration factor of 0.03 g/bhp-hr for PM and an assigned deterioration factor of zero for other pollutants. For purposes of determining compliance other than for certification or production-line testing, calculate the applicable in-use compliance limits for these locomotives by adjusting the applicable PM standards/FELs upward by 0.03 g/bhp-hr.

[73 FR 37197, June 30, 2008, as amended at 73 FR 59189, Oct. 8, 2008; 74 FR 8423, Feb. 24, 2009; 75 FR 22983, Apr. 30, 2010; 75 FR 68460, Nov. 8, 2010]

Subpart C—Certifying Engine Families

§ 1033.201 General requirements for obtaining a certificate of conformity.

Certification is the process by which you demonstrate to us that your freshly manufactured or remanufactured locomotives will meet the applicable emission standards throughout their useful lives (explaining to us how you plan to manufacture or remanufacture locomotives, and providing test data showing that such locomotives will comply with all applicable emission

standards). Anyone meeting the definition of manufacturer in § 1033.901 may apply for a certificate of conformity for freshly manufactured locomotives. Anyone meeting the definition of remanufacturer in § 1033.901 may apply for a certificate of conformity for remanufactured locomotives.

(a) You must send us a separate application for a certificate of conformity for each engine family. A certificate of conformity is valid starting with the indicated effective date, but it is not valid for any production after December 31 of the model year for which it is issued. No certificate will be issued after December 31 of the model year.

(b) The application must contain all the information required by this part and must not include false or incomplete statements or information (see § 1033.255).

(c) We may ask you to include less information than we specify in this subpart, as long as you maintain all the information required by § 1033.250.

(d) You must use good engineering judgment for all decisions related to your application (see 40 CFR 1068.5).

(e) An authorized representative of your company must approve and sign the application.

(f) See § 1033.255 for provisions describing how we will process your application.

(g) We may require you to deliver your test locomotives to a facility we designate for our testing (see § 1033.235(c)).

(h) By applying for a certificate of conformity, you are accepting responsibility for the in-use emission performance of all properly maintained and used locomotives covered by your certificate. This responsibility applies without regard to whether you physically manufacture or remanufacture the entire locomotive. If you do not physically manufacture or remanufacture the entire locomotive, you must take reasonable steps (including those specified by this part) to ensure that the locomotives produced under your certificate conform to the specifications of your application for certification. Note that this paragraph does not limit any liability under this part or the Clean Air Act for entities that do not obtain certificates. This paragraph also does not prohibit you from making contractual arrangements with noncertifiers related to recovering damages for noncompliance.

(i) The provisions of this subpart describe how to obtain a certificate that covers all standards and requirements. Manufacturer/remanufacturers may ask to obtain a certificate of conformity that does not cover the idle control requirements of § 1033.115 or one that only covers the idle control requirements of § 1033.115. Remanufacturers obtaining such partial certificates must include a statement in their installation instructions that two certificates and labels are required for a locomotive to be in a fully certified configuration. We may modify the certification requirements for certificates that will only cover idle control systems.

§ 1033.205 Applying for a certificate of conformity.

(a) Send the Designated Compliance Officer a complete application for each engine family for which you are requesting a certificate of conformity.

(b) [Reserved]

(c) You must update and correct your application to accurately reflect your production, as described in § 1033.225.

(d) Include the following information in your application:

(1) A description of the basic engine design including, but not limited to, the engine family specifications listed in § 1033.230. For freshly manufactured locomotives, a description of the basic locomotive design. For remanufactured locomotives, a description of the basic locomotive designs to which the remanufacture system will be applied. Include in your description, a list of distinguishable configurations to be included in the engine family. Note whether you are requesting a certificate that will or will not cover idle controls.

(2) An explanation of how the emission control system operates, including detailed descriptions of:

(i) All emission control system components.

(ii) Injection or ignition timing for each notch (i.e., degrees before or after top-dead-center), and any functional

dependence of such timing on other operational parameters (e.g., engine coolant temperature).

(iii) Each auxiliary emission control device (AECD).

(iv) All fuel system components to be installed on any production or test locomotives.

(v) Diagnostics.

(3) A description of the test locomotive.

(4) A description of the test equipment and fuel used. Identify any special or alternate test procedures you used.

(5) A description of the operating cycle and the period of operation necessary to accumulate service hours on the test locomotive and stabilize emission levels. You may also include a Green Engine Factor that would adjust emissions from zero-hour engines to be equivalent to stabilized engines.

(6) A description of all adjustable operating parameters (including, but not limited to, injection timing and fuel rate), including the following:

(i) The nominal or recommended setting and the associated production tolerances.

(ii) The intended adjustable range, and the physically adjustable range.

(iii) The limits or stops used to limit adjustable ranges.

(iv) Production tolerances of the limits or stops used to establish each physically adjustable range.

(v) Information relating to why the physical limits or stops used to establish the physically adjustable range of each parameter, or any other means used to inhibit adjustment, are the most effective means possible of preventing adjustment of parameters to settings outside your specified adjustable ranges on in-use engines.

(7) Projected U.S. production information for each configuration. If you are projecting substantially different sales of a configuration than you had previously, we may require you to explain why you are projecting the change.

(8)(i) All test data you obtained for each test engine or locomotive. As described in §1033.235, we may allow you to demonstrate compliance based on results from previous emission tests, development tests, or other testing information. Include data for NOx, PM, HC, CO, and CO_2.

(ii) Report measured CO_2, N_2O, and CH_4 as described in §1033.235. Small manufacturers/remanufacturers may omit reporting N_2O and CH_4.

(9) The intended deterioration factors for the engine family, in accordance with §1033.245. If the deterioration factors for the engine family were developed using procedures that we have not previously approved, you should request preliminary approval under §1033.210.

(10) The intended useful life period for the engine family, in accordance with §1033.101(g). If the useful life for the engine family was determined using procedures that we have not previously approved, you should request preliminary approval under §1033.210.

(11) Copies of your proposed emission control label(s), maintenance instructions, and installation instructions (where applicable).

(12) An unconditional statement declaring that all locomotives included in the engine family comply with all requirements of this part and the Clean Air Act.

(e) If we request it, you must supply such additional information as may be required to evaluate the application.

(f) Provide the information to read, record, and interpret all the information broadcast by a locomotive's onboard computers and electronic control units. State that, upon request, you will give us any hardware, software, or tools we would need to do this. You may reference any appropriate publicly released standards that define conventions for these messages and parameters. Format your information consistent with publicly released standards.

(g) Include the information required by other subparts of this part. For example, include the information required by §1033.725 if you participate in the ABT program.

(h) Include other applicable information, such as information specified in this part or part 1068 of this chapter related to requests for exemptions.

(i) Name an agent for service located in the United States. Service on this agent constitutes service on you or any of your officers or employees for any

action by EPA or otherwise by the United States related to the requirements of this part.

(j) For imported locomotives, we may require you to describe your expected importation process.

[73 FR 37197, June 30, 2008, as amended at 73 FR 59190, Oct. 8, 2008; 74 FR 56508, Oct. 30, 2008]

§ 1033.210 Preliminary approval.

(a) If you send us information before you finish the application, we will review it and make any appropriate determinations for questions related to engine family definitions, auxiliary emission-control devices, deterioration factors, testing for service accumulation, maintenance, and useful lives.

(b) Decisions made under this section are considered to be preliminary approval, subject to final review and approval. We will generally not reverse a decision where we have given you preliminary approval, unless we find new information supporting a different decision.

(c) If you request preliminary approval related to the upcoming model year or the model year after that, we will make best-efforts to make the appropriate determinations as soon as practicable. We will generally not provide preliminary approval related to a future model year more than three years ahead of time.

(d) You must obtain preliminary approval for your plan to develop deterioration factors prior to the start of any service accumulation to be used to develop the factors.

§ 1033.220 Amending maintenance instructions.

You may amend your emission-related maintenance instructions after you submit your application for certification, as long as the amended instructions remain consistent with the provisions of § 1033.125. You must send the Designated Compliance Officer a request to amend your application for certification for an engine family if you want to change the emission-related maintenance instructions in a way that could affect emissions. In your request, describe the proposed changes to the maintenance instructions. If owners/operators follow the original maintenance instructions rather than the newly specified maintenance, this does not allow you to disqualify those locomotives from in-use testing or deny a warranty claim.

(a) If you are decreasing or eliminating any of the specified maintenance, you may distribute the new maintenance instructions to your customers 30 days after we receive your request, unless we disapprove your request. This would generally include replacing one maintenance step with another. We may approve a shorter time or waive this requirement.

(b) If your requested change would not decrease the specified maintenance, you may distribute the new maintenance instructions anytime after you send your request. For example, this paragraph (b) would cover adding instructions to increase the frequency of filter changes for locomotives in severe-duty applications.

(c) You do not need to request approval if you are making only minor corrections (such as correcting typographical mistakes), clarifying your maintenance instructions, or changing instructions for maintenance unrelated to emission control. We may ask you to send us copies of maintenance instructions revised under this paragraph (c).

[73 FR 37197, June 30, 2008, as amended at 75 FR 22983, Apr. 30, 2010]

§ 1033.225 Amending applications for certification

Before we issue you a certificate of conformity, you may amend your application to include new or modified locomotive configurations, subject to the provisions of this section. After we have issued your certificate of conformity, you may send us an amended application requesting that we include new or modified locomotive configurations within the scope of the certificate, subject to the provisions of this section. You must also amend your application if any changes occur with respect to any information that is included or should be included in your application. For example, you must

amend your application if you determine that your actual production variation for an adjustable parameter exceeds the tolerances specified in your application.

(a) You must amend your application before you take either of the following actions:

(1) Add a locomotive configuration to an engine family. In this case, the locomotive added must be consistent with other locomotives in the engine family with respect to the criteria listed in § 1033.230. For example, you must amend your application if you want to produce 12-cylinder versions of the 16-cylinder locomotives you described in your application.

(2) Change a locomotive already included in an engine family in a way that may affect emissions, or change any of the components you described in your application for certification. This includes production and design changes that may affect emissions any time during the locomotive's lifetime. For example, you must amend your application if you want to change a part supplier if the part was described in your original application and is different in any material respect than the part you described.

(3) Modify an FEL for an engine family as described in paragraph (f) of this section.

(b) To amend your application for certification, send the relevant information to the Designated Compliance Officer.

(1) Describe in detail the addition or change in the locomotive model or configuration you intend to make.

(2) Include engineering evaluations or data showing that the amended engine family complies with all applicable requirements. You may do this by showing that the original emission-data locomotive is still appropriate for showing that the amended family complies with all applicable requirements.

(3) If the original emission-data locomotive for the engine family is not appropriate to show compliance for the new or modified locomotive, include new test data showing that the new or modified locomotive meets the requirements of this part.

(c) We may ask for more test data or engineering evaluations. You must give us these within 30 days after we request them.

(d) For engine families already covered by a certificate of conformity, we will determine whether the existing certificate of conformity covers your new or modified locomotive. You may ask for a hearing if we deny your request (see § 1033.920).

(e) For engine families already covered by a certificate of conformity, you may start producing the new or modified locomotive anytime after you send us your amended application, before we make a decision under paragraph (d) of this section. However, if we determine that the affected locomotives do not meet applicable requirements, we will notify you to cease production of the locomotives and may require you to recall the locomotives at no expense to the owner. Choosing to produce locomotives under this paragraph (e) is deemed to be consent to recall all locomotives that we determine do not meet applicable emission standards or other requirements and to remedy the nonconformity at no expense to the owner. If you do not provide information required under paragraph (c) of this section within 30 days after we request it, you must stop producing the new or modified locomotives.

(f) You may ask us to approve a change to your FEL in certain cases after the start of production. The changed FEL may not apply to locomotives you have already introduced into U.S. commerce, except as described in this paragraph (f). If we approve a changed FEL after the start of production, you must include the new FEL on the emission control information label for all locomotives produced after the change. You may ask us to approve a change to your FEL in the following cases:

(1) You may ask to raise your FEL for your engine family at any time. In your request, you must show that you will still be able to meet the emission standards as specified in subparts B and H of this part. If you amend your application by submitting new test data to include a newly added or modified locomotive, as described in paragraph (b)(3) of this section, use the appropriate FELs with corresponding

production volumes to calculate emission credits for the model year, as described in subpart H of this part. In all other circumstances, you must use the higher FEL for the entire family to calculate emission credits under subpart H of this part.

(2) You may ask to lower the FEL for your emission family only if you have test data from production locomotives showing that emissions are below the proposed lower FEL. The lower FEL applies only to engines or fuel-system components you produce after we approve the new FEL. Use the appropriate FELs with corresponding production volumes to calculate emission credits for the model year, as described in subpart H of this part.

[73 FR 37197, June 30, 2008, as amended at 75 FR 22983, Apr. 30, 2010]

§ 1033.230 Grouping locomotives into engine families.

(a) Divide your product line into engine families of locomotives that are expected to have similar emission characteristics throughout the useful life. Your engine family is limited to a single model year. Freshly manufactured locomotives may not be included in the same engine family as remanufactured locomotives, except as allowed by paragraph (f) of this section. Paragraphs (b) and (c) of this section specify default criteria for dividing locomotives into engine families. Paragraphs (d) and (e) of this section allow you deviate from these defaults in certain circumstances.

(b) This paragraph (b) applies for all locomotives other than Tier 0 locomotives. Group locomotives in the same engine family if they are the same in all the following aspects:

(1) The combustion cycle (e.g., diesel cycle).

(2) The type of engine cooling employed and procedure(s) employed to maintain engine temperature within desired limits (thermostat, on-off radiator fan(s), radiator shutters, etc.).

(3) The nominal bore and stroke dimensions.

(4) The approximate intake and exhaust event timing and duration (valve or port).

(5) The location of the intake and exhaust valves (or ports).

(6) The size of the intake and exhaust valves (or ports).

(7) The overall injection or ignition timing characteristics (i.e., the deviation of the timing curves from the optimal fuel economy timing curve must be similar in degree).

(8) The combustion chamber configuration and the surface-to-volume ratio of the combustion chamber when the piston is at top dead center position, using nominal combustion chamber dimensions.

(9) The location of the piston rings on the piston.

(10) The method of air aspiration (turbocharged, supercharged, naturally aspirated, Roots blown).

(11) The general performance characteristics of the turbocharger or supercharger (e.g., approximate boost pressure, approximate response time, approximate size relative to engine displacement).

(12) The type of air inlet cooler (air-to-air, air-to-liquid, approximate degree to which inlet air is cooled).

(13) The intake manifold induction port size and configuration.

(14) The type of fuel and fuel system configuration.

(15) The configuration of the fuel injectors and approximate injection pressure.

(16) The type of fuel injection system controls (i.e., mechanical or electronic).

(17) The type of smoke control system.

(18) The exhaust manifold port size and configuration.

(19) The type of exhaust aftertreatment system (oxidation catalyst, particulate trap), and characteristics of the aftertreatment system (catalyst loading, converter size vs. engine size).

(c) Group Tier 0 locomotives in the same engine family if they are the same in all the following aspects:

(1) The combustion cycle (e.g., diesel cycle).

(2) The type of engine cooling employed and procedure(s) employed to maintain engine temperature within desired limits (thermostat, on-off radiator fan(s), radiator shutters, etc.).

(3) The approximate bore and stroke dimensions.

(4) The approximate location of the intake and exhaust valves (or ports).

(5) The combustion chamber general configuration and the approximate surface-to-volume ratio of the combustion chamber when the piston is at top dead center position, using nominal combustion chamber dimensions.

(6) The method of air aspiration (turbocharged, supercharged, naturally aspirated, Roots blown).

(7) The type of air inlet cooler (air-to-air, air-to-liquid, approximate degree to which inlet air is cooled).

(8) The type of fuel and general fuel system configuration.

(9) The general configuration of the fuel injectors and approximate injection pressure.

(10) The type of fuel injection system control (electronic or mechanical).

(d) You may subdivide a group of locomotives that is identical under paragraph (b) or (c) of this section into different engine families if you show the expected emission characteristics are different during the useful life. This allowance also covers locomotives for which only calculated emission rates differ, such as locomotives with and without energy-saving design features. For the purposes of determining whether an engine family is a small engine family in §1033.405(a)(2), we will consider the number of locomotives that could have been classed together under paragraph (b) or (c) of this section, instead of the number of locomotives that are included in a subdivision allowed by this paragraph (d).

(e) In unusual circumstances, you may group locomotives that are not identical with respect to the things listed in paragraph (b) or (c) of this section in the same engine family if you show that their emission characteristics during the useful life will be similar.

(f) During the first six calendar years after a new tier of standards becomes applicable, remanufactured engines/locomotives may be included in the same engine family as freshly manufactured locomotives, provided the same engines and emission controls are used for locomotive models included in the engine family.

[73 FR 37197, June 30, 2008, as amended at 73 FR 59190, Oct. 8, 2008]

§ 1033.235 Emission testing required for certification.

This section describes the emission testing you must perform to show compliance with the emission standards in §1033.101.

(a) Select an emission-data locomotive (or engine) from each engine family for testing. It may be a low mileage locomotive, or a development engine (that is equivalent in design to the engines of the locomotives being certified), or another low hour engine. Use good engineering judgment to select the locomotive configuration that is most likely to exceed (or have emissions nearest to) an applicable emission standard or FEL. In making this selection, consider all factors expected to affect emission control performance and compliance with the standards, including emission levels of all exhaust constituents, especially NO_X and PM.

(b) Test your emission-data locomotives using the procedures and equipment specified in subpart F of this part.

(c) We may measure emissions from any of your emission-data locomotives or other locomotives from the engine family.

(1) We may decide to do the testing at your plant or any other facility. If we do this, you must deliver the locomotive to a test facility we designate. If we do the testing at your plant, you must schedule it as soon as possible and make available the instruments, personnel, and equipment we need.

(2) If we measure emissions from one of your locomotives, the results of that testing become the official emission results for the locomotive. Unless we later invalidate these data, we may decide not to consider your data in determining if your engine family meets applicable requirements.

(3) Before we test one of your locomotives, we may set its adjustable parameters to any point within the adjustable ranges (*see* §1033.115(b)).

(4) Before we test one of your locomotives, we may calibrate it within normal production tolerances for anything we do not consider an adjustable parameter. For example, this would apply where we determine that an engine parameter is not an adjustable parameter (as defined in §1033.901) but

that it is subject to production variability.

(d) You may ask to use carryover emission data from a previous model year instead of doing new tests if all the following are true:

(1) The engine family from the previous model year differs from the current engine family only with respect to model year, or other factors not related to emissions. You may include additional configurations subject to the provisions of § 1033.225.

(2) The emission-data locomotive from the previous model year remains the appropriate emission-data locomotive under paragraph (b) of this section.

(3) The data show that the emission-data locomotive would meet all the requirements that apply to the engine family covered by the application for certification.

(e) You may ask to use emission data from a different engine family you have already certified instead of testing a locomotive in the second engine family if all the following are true:

(1) The same engine is used in both engine families.

(2) You demonstrate to us that the differences in the two families are sufficiently small that the locomotives in the untested family will meet the same applicable notch standards calculated from the test data.

(f) We may require you to test a second locomotive of the same or different configuration in addition to the locomotive tested under paragraph (b) of this section.

(g) If you use an alternate test procedure under 40 CFR 1065.10 and later testing shows that such testing does not produce results that are equivalent to the procedures specified in subpart F of this part, we may reject data you generated using the alternate procedure.

(h) The requirement to measure smoke emissions is waived for certification and production line testing, except where there is reason to believe your locomotives do not meet the applicable smoke standards.

(i) Measure CO_2 with each test. Measure CH_4 with each low-hour certification test using the procedures specified in 40 CFR part 1065 starting in the 2012 model year. Also measure N_2O with each low-hour certification test using the procedures specified in 40 CFR part 1065 for any engine family that depends on NOx aftertreatment to meet emission standards. Small manufacturers/remanufacturers may omit measurement of N_2O and CH_4. Use the same units and modal calculations as for your other results to report a single weighted value for CO_2, N_2O, and CH_4. Round the final values as follows:

(1) Round CO_2 to the nearest 1 g/bhp–hr.

(2) Round N_2O to the nearest 0.001 g/bhp–hr.

(3) Round CH_4 to the nearest 0.001g/bhp–hr.

[73 FR 37197, June 30, 2008, as amended at 74 FR 56508, Oct. 30, 2008; 75 FR 22984, Apr. 30, 2010]

§ 1033.240 Demonstrating compliance with exhaust emission standards.

(a) For purposes of certification, your engine family is considered in compliance with the applicable numerical emission standards in § 1033.101 if all emission-data locomotives representing that family have test results showing official emission results and deteriorated emission levels at or below these standards.

(1) If you include your locomotive in the ABT program in subpart H of this part, your FELs are considered to be the applicable emission standards with which you must comply.

(2) If you do not include your remanufactured locomotive in the ABT program in subpart H of this part, but it was previously included in the ABT program in subpart H of this part, the previous FELs are considered to be the applicable emission standards with which you must comply.

(b) Your engine family is deemed not to comply if any emission-data locomotive representing that family has test results showing an official emission result or a deteriorated emission level for any pollutant that is above an applicable emission standard. Use the following steps to determine the deteriorated emission level for the test locomotive:

(1) Collect emission data using measurements with enough significant figures to calculate the cycle-weighted

emission rate to at least one more decimal place than the applicable standard. Apply any applicable humidity corrections before weighting emissions.

(2) Apply the regeneration factors if applicable. At this point the emission rate is generally considered to be an official emission result.

(3) Apply the deterioration factor to the official emission result, as described in § 1033.245, then round the adjusted figure to the same number of decimal places as the emission standard. This adjusted value is the deteriorated emission level. Compare these emission levels from the emission-data locomotive with the applicable emission standards. In the case of NO_x+NMHC standards, apply the deterioration factor to each pollutant and then add the results before rounding.

(4) The highest deteriorated emission levels for each pollutant are considered to be the certified emission levels.

(c) An owner/operator remanufacturing its locomotives to be identical to their previously certified configuration may certify by design without new emission test data. To do this, submit the application for certification described in § 1033.205, but instead of including test data, include a description of how you will ensure that your locomotives will be identical in all material respects to their previously certified condition. You may use reconditioned parts consistent with good engineering judgment. You have all of the liabilities and responsibilities of the certificate holder for locomotives you certify under this paragraph.

[73 FR 37197, June 30, 2008, as amended at 75 FR 22984, Apr. 30, 2010]

§ 1033.245 Deterioration factors.

Establish deterioration factors for each pollutant to determine, as described in § 1033.240, whether your locomotives will meet emission standards for each pollutant throughout the useful life. Determine deterioration factors as described in this section, either with an engineering analysis, with preexisting test data, or with new emission measurements. The deterioration factors are intended to reflect the deterioration expected to result during the useful life of a locomotive maintained as specified in § 1033.125. If you perform durability testing, the maintenance that you may perform on your emission-data locomotive is limited to the maintenance described in § 1033.125.

(a) Your deterioration factors must take into account any available data from in-use testing with similar locomotives, consistent with good engineering judgment. For example, it would not be consistent with good engineering judgment to use deterioration factors that predict emission increases over the useful life of a locomotive or locomotive engine that are significantly less than the emission increases over the useful life observed from in-use testing of similar locomotives.

(b) Deterioration factors may be additive or multiplicative.

(1) *Additive deterioration factor for exhaust emissions.* Except as specified in paragraph (b)(2) of this section, use an additive deterioration factor for exhaust emissions. An additive deterioration factor for a pollutant is the difference between exhaust emissions at the end of the useful life and exhaust emissions at the low-hour test point. In these cases, adjust the official emission results for each tested locomotive at the selected test point by adding the factor to the measured emissions. The deteriorated emission level is intended to represent the highest emission level during the useful life. Thus, if the factor is less than zero, use zero. Additive deterioration factors must be specified to one more decimal place than the applicable standard.

(2) *Multiplicative deterioration factor for exhaust emissions.* Use a multiplicative deterioration factor if good engineering judgment calls for the deterioration factor for a pollutant to be the ratio of exhaust emissions at the end of the useful life to exhaust emissions at the low-hour test point. For example, if you use aftertreatment technology that controls emissions of a pollutant proportionally to engine-out emissions, it is often appropriate to use a multiplicative deterioration factor. Adjust the official emission results for each tested locomotive at the selected test point by multiplying the measured emissions by the deterioration factor.

The deteriorated emission level is intended to represent the highest emission level during the useful life. Thus, if the factor is less than one, use one. A multiplicative deterioration factor may not be appropriate in cases where testing variability is significantly greater than locomotive-to-locomotive variability. Multiplicative deterioration factors must be specified to one more significant figure than the applicable standard.

(c) Deterioration factors for smoke are always additive.

(d) If your locomotive vents crankcase emissions to the exhaust or to the atmosphere, you must account for crankcase emission deterioration, using good engineering judgment. You may use separate deterioration factors for crankcase emissions of each pollutant (either multiplicative or additive) or include the effects in combined deterioration factors that include exhaust and crankcase emissions together for each pollutant.

(e) Include the following information in your application for certification:

(1) If you determine your deterioration factors based on test data from a different engine family, explain why this is appropriate and include all the emission measurements on which you base the deterioration factor.

(2) If you determine your deterioration factors based on engineering analysis, explain why this is appropriate and include a statement that all data, analyses, evaluations, and other information you used are available for our review upon request.

(3) If you do testing to determine deterioration factors, describe the form and extent of service accumulation, including a rationale for selecting the service-accumulation period and the method you use to accumulate hours.

§ 1033.250 Reporting and recordkeeping.

(a) Within 45 days after the end of the model year, send the Designated Compliance Officer a report describing the following information about locomotives you produced during the model year:

(1) Report the total number of locomotives you produced in each engine family by locomotive model and engine model.

(2) If you produced exempted locomotives, report the number of exempted locomotives you produced for each locomotive model and identify the buyer or shipping destination for each exempted locomotive. You do not need to report under this paragraph (a)(2) locomotives that were temporarily exempted, exported locomotives, locomotives exempted as manufacturer/remanufacturer-owned locomotives, or locomotives exempted as test locomotives.

(b) Organize and maintain the following records:

(1) A copy of all applications and any summary information you send us.

(2) Any of the information we specify in § 1033.205 that you were not required to include in your application.

(3) A detailed history of each emission-data locomotive. For each locomotive, describe all of the following:

(i) The emission-data locomotive's construction, including its origin and buildup, steps you took to ensure that it represents production locomotives, any components you built specially for it, and all the components you include in your application for certification.

(ii) How you accumulated locomotive operating hours (service accumulation), including the dates and the number of hours accumulated.

(iii) All maintenance, including modifications, parts changes, and other service, and the dates and reasons for the maintenance.

(iv) All your emission tests, including documentation on routine and standard tests, as specified in part 40 CFR part 1065, and the date and purpose of each test.

(v) All tests to diagnose locomotive or emission control performance, giving the date and time of each and the reasons for the test.

(vi) Any other significant events.

(4) If you test a development engine for certification, you may omit information otherwise required by paragraph (b)(3) of this section that is unrelated to emissions and emission-related components.

(5) Production figures for each engine family divided by assembly plant.

(6) Keep a list of locomotive identification numbers for all the locomotives you produce under each certificate of conformity.

(c) Keep data from routine emission tests (such as test cell temperatures and relative humidity readings) for one year after we issue the associated certificate of conformity. Keep all other information specified in paragraph (a) of this section for eight years after we issue your certificate.

(d) Store these records in any format and on any media, as long as you can promptly send us organized, written records in English if we ask for them. You must keep these records readily available. We may review them at any time.

(e) Send us copies of any locomotive maintenance instructions or explanations if we ask for them.

§ 1033.255 EPA decisions.

(a) If we determine your application is complete and shows that the engine family meets all the requirements of this part and the Clean Air Act, we will issue a certificate of conformity for your engine family for that model year. We may make the approval subject to additional conditions.

(b) We may deny your application for certification if we determine that your engine family fails to comply with emission standards or other requirements of this part or the Clean Air Act. We will base our decision on all available information. If we deny your application, we will explain why in writing.

(c) In addition, we may deny your application or suspend or revoke your certificate if you do any of the following:

(1) Refuse to comply with any testing or reporting requirements.

(2) Submit false or incomplete information (paragraph (e) of this section applies if this is fraudulent).

(3) Render inaccurate any test data.

(4) Deny us from completing authorized activities. This includes a failure to provide reasonable assistance.

(5) Produce locomotives for importation into the United States at a location where local law prohibits us from carrying out authorized activities.

(6) Fail to supply requested information or amend your application to include all locomotives being produced.

(7) Take any action that otherwise circumvents the intent of the Clean Air Act or this part.

(d) We may void your certificate if you do not keep the records we require or do not give us information when we ask for it.

(e) We may void your certificate if we find that you intentionally submitted false or incomplete information.

(f) If we deny your application or suspend, revoke, or void your certificate, you may ask for a hearing (see § 1033.920).

[73 FR 37197, June 30, 2008, as amended at 75 FR 22984, Apr. 30, 2010]

Subpart D—Manufacturer and Remanufacturer Production Line Testing and Audit Programs

§ 1033.301 Applicability.

The requirements of this part apply to manufacturers/remanufacturers of locomotives certified under this part, with the following exceptions:

(a) The requirements of §§ 1033.310 1033.315, 1033.320, and 1033.330 apply only to manufacturers of freshly manufactured locomotives or locomotive engines (including those used for repowering). We may also apply these requirements to remanufacturers of any locomotives for which there is reason to believe production problems exist that could affect emission performance. When we make a determination that production problems may exist that could affect emission performance, we will notify the remanufacturer(s). The requirements of §§ 1033.310, 1033.315, 1033.320, and 1033.330 will apply as specified in the notice.

(b) The requirements of § 1033.335 apply only to remanufacturers.

(c) As specified in § 1033.1(d), we may apply the requirements of this subpart to manufacturers/remanufacturers that do not certify the locomotives. However, unless we specify otherwise, the requirements of this subpart apply to manufacturers/remanufacturers that hold the certificates for the locomotives.

§ 1033.305 General requirements.

(a) Manufacturers (and remanufacturers, where applicable) are required to test production line locomotives using the test procedures specified in § 1033.315. While this subpart refers to locomotive testing, you may ask to test locomotive engines instead of testing locomotives.

(b) Remanufacturers are required to conduct audits according to the requirements of § 1033.335 to ensure that remanufactured locomotives comply with the requirements of this part.

(c) If you certify an engine family with carryover emission data, as described in § 1033.235, and these equivalent engine families consistently pass the production-line testing requirements over the preceding two-year period, you may ask for a reduced testing rate for further production-line testing for that family. If we reduce your testing rate, we may limit our approval to any number of model years. In determining whether to approve your request, we may consider the number of locomotives that have failed emission tests.

(d) You may ask to use an alternate program or measurement method for testing production-line engines. In your request, you must show us that the alternate program gives equal assurance that your engines meet the requirements of this part. We may waive some or all of this subpart's requirements if we approve your alternate program.

§ 1033.310 Sample selection for testing.

(a) At the start of each model year, begin randomly selecting locomotives from each engine family for production line testing at a rate of one percent. Make the selection of the test locomotive after it has been assembled. Perform the testing throughout the entire model year to the extent possible, unless we specify a different schedule for your tests. For example, we may require you to disproportionately select locomotives from the early part of a model year for a new locomotive model that has not been subject to PLT previously.

(1) The required sample size for an engine family (provided that no locomotive tested fails to meet applicable emission standards) is the lesser of five tests per model year or one percent of projected annual production, with a minimum sample size for an engine family of one test per model year. See paragraph (d) of this section to determine the required number of test locomotives if any locomotives fail to comply with any standards.

(2) You may elect to test additional locomotives. All additional locomotives must be tested in accordance with the applicable test procedures of this part.

(b) You must assemble the test locomotives using the same production process that will be used for locomotives to be introduced into commerce. You may ask us to allow special assembly procedures for catalyst-equipped locomotives.

(c) Unless we approve it, you may not use any quality control, testing, or assembly procedures that you do not use during the production and assembly of all other locomotives of that family. This applies for any test locomotive or any portion of a locomotive, including engines, parts, and subassemblies.

(d) If one or more locomotives fail a production line test, then you must test two additional locomotives from the next fifteen produced in that engine family for each locomotive that fails. These two additional locomotives do not count towards your minimum number of locomotives. For example, if you are required to test a minimum of four locomotives under paragraph (a) of this section and the second locomotive fails to comply with one or more standards, then you must test two additional locomotives from the next fifteen produced in that engine family. If both of those locomotives pass all standards, you are required to test two additional locomotives to complete the original minimum number of four. If they both pass, you are done with testing for that family for the year since you tested six locomotives (the four originally required plus the two additional locomotives).

§ 1033.315 Test procedures.

(a) *Test procedures.* Use the test procedures described in subpart F of this part, except as specified in this section.

(1) You may ask to use other test procedures. We will approve your request if we determine that it is not possible to perform satisfactory testing using the specified procedures. We may also approve alternate test procedures under § 1033.305(d).

(2) If you used test procedures other than those in subpart F of this part during certification for the engine family (other than alternate test procedures necessary for testing a development engine or a low hour engine instead of a low mileage locomotive), use the same test procedures for production line testing that you used in certification.

(b) *Modifying a test locomotive.* Once an engine is selected for testing, you may adjust, repair, maintain, or modify it or check its emissions only if one of the following is true:

(1) You document the need for doing so in your procedures for assembling and inspecting all your production engines and make the action routine for all the engines in the engine family.

(2) This subpart otherwise specifically allows your action.

(3) We approve your action in advance.

(c) *Adjustable parameters.* (1) Confirm that adjustable parameters are set to values or positions that are within the range recommended to the ultimate purchaser.

(2) We may require to be adjusted any adjustable parameter to any setting within the specified adjustable range of that parameter prior to the performance of any test.

(d) *Stabilizing emissions.* You may stabilize emissions from the locomotives to be tested through service accumulation by running the engine through a typical duty cycle. Emissions are considered stabilized after 300 hours of operation. You may accumulate fewer hours, consistent with good engineering judgment. You may establish a Green Engine Factor for each regulated pollutant for each engine family, instead of (or in combination with) accumulating actual operation, to be used in calculating emissions test results. You must obtain our approval prior to using a Green Engine Factor. For catalyst-equipped locomotives, you may operate the locomotive for up to 1000 hours (in revenue or other service) prior to testing.

(e) *Adjustment after shipment.* If a locomotive is shipped to a facility other than the production facility for production line testing, and an adjustment or repair is necessary because of such shipment, you may perform the necessary adjustment or repair only after the initial test of the locomotive, unless we determine that the test would be impossible to perform or would permanently damage the locomotive.

(f) *Malfunctions.* If a locomotive cannot complete the service accumulation or an emission test because of a malfunction, you may request that we authorize either the repair of that locomotive or its deletion from the test sequence.

(g) *Retesting.* If you determine that any production line emission test of a locomotive is invalid, you must retest it in accordance with the requirements of this subpart. Report emission results from all tests to us, including test results you determined are invalid. You must also include a detailed explanation of the reasons for invalidating any test in the quarterly report required in § 1033.320(e). In the event a retest is performed, you may ask us within ten days of the end of the production quarter for permission to substitute the after-repair test results for the original test results. We will respond to the request within ten working days of our receipt of the request.

§ 1033.320 Calculation and reporting of test results.

(a) Calculate initial test results using the applicable test procedure specified in § 1033.315(a). Include applicable nondeterioration adjustments such as a Green Engine Factor or regeneration adjustment factor. Round the results to one more decimal place than the applicable emission standard.

(b) If you conduct multiple tests on any locomotives, calculate final test results by summing the initial test results derived in paragraph (a) of this section for each test locomotive, dividing by the number of tests conducted on the locomotive, and rounding to one more decimal place than the applicable emission standard. For catalyst-equipped locomotives, you may ask us

to allow you to exclude an initial failed test if all of the following are true:

(1) The catalyst was in a green condition when tested initially.

(2) The locomotive met all emission standards when retested after degreening the catalyst.

(3) No additional emission-related maintenance or repair was performed between the initial failed test and the subsequent passing test.

(c) Calculate the final test results for each test locomotive by applying the appropriate deterioration factors, derived in the certification process for the engine family, to the final test results, and rounding to one more decimal place than the applicable emission standard.

(d) If, subsequent to an initial failure of a production line test, the average of the test results for the failed locomotive and the two additional locomotives tested, is greater than any applicable emission standard or FEL, the engine family is deemed to be in noncompliance with applicable emission standards, and you must notify us within ten working days of such noncompliance.

(e) Within 45 calendar days of the end of each quarter, you must send to the Designated Compliance Officer a report with the following information:

(1) The location and description of the emission test facilities which you used to conduct your testing.

(2) Total production and sample size for each engine family tested.

(3) The applicable standards against which each engine family was tested.

(4) For each test conducted, include all of the following:

(i) A description of the test locomotive, including:

(A) Configuration and engine family identification.

(B) Year, make, and build date.

(C) Engine identification number.

(D) Number of megawatt-hours (or miles if applicable) of service accumulated on locomotive prior to testing.

(E) Description of Green Engine Factor; how it is determined and how it is applied.

(ii) Location(s) where service accumulation was conducted and description of accumulation procedure and schedule, if applicable. If the locomotive was introduced into service between assembly and testing, you are only required to summarize the service accumulation, rather than identifying specific locations.

(iii) Test number, date, test procedure used, initial test results before and after rounding, and final test results for all production line emission tests conducted, whether valid or invalid, and the reason for invalidation of any test results, if applicable.

(iv) A complete description of any adjustment, modification, repair, preparation, maintenance, and testing which was performed on the test locomotive, has not been reported pursuant to any other paragraph of this subpart, and will not be performed on other production locomotives.

(v) Any other information we may ask you to add to your written report so we can determine whether your new engines conform with the requirements of this part.

(6) For each failed locomotive as defined in § 1033.330(a), a description of the remedy and test results for all retests as required by § 1033.340(g).

(7) The following signed statement and endorsement by an authorized representative of your company:

> We submit this report under sections 208 and 213 of the Clean Air Act. Our production-line testing conformed completely with the requirements of 40 CFR part 1033. We have not changed production processes or quality-control procedures for the test locomotives in a way that might affect emission controls. All the information in this report is true and accurate to the best of my knowledge. I know of the penalties for violating the Clean Air Act and the regulations. (Authorized Company Representative)

§ 1033.325 Maintenance of records; submittal of information.

(a) You must establish, maintain, and retain the following adequately organized and indexed test records:

(1) A description of all equipment used to test locomotives. The equipment requirements in subpart F of this part apply to tests performed under this subpart. Maintain these records for each test cell that can be used to perform emission testing under this subpart.

(2) Individual test records for each production line test or audit including:

(i) The date, time, and location of each test or audit.

(ii) The method by which the Green Engine Factor was calculated or the number of hours of service accumulated on the test locomotive when the test began and ended.

(iii) The names of all supervisory personnel involved in the conduct of the production line test or audit;

(iv) A record and description of any adjustment, repair, preparation or modification performed on test locomotives, giving the date, associated time, justification, name(s) of the authorizing personnel, and names of all supervisory personnel responsible for the conduct of the action.

(v) If applicable, the date the locomotive was shipped from the assembly plant, associated storage facility or port facility, and the date the locomotive was received at the testing facility.

(vi) A complete record of all emission tests or audits performed under this subpart (except tests performed directly by us), including all individual worksheets and/or other documentation relating to each test, or exact copies thereof, according to the record requirements specified in subpart F of this part and 40 CFR part 1065.

(vii) A brief description of any significant events during testing not otherwise described under this paragraph (a)(2), commencing with the test locomotive selection process and including such extraordinary events as engine damage during shipment.

(b) Keep all records required to be maintained under this subpart for a period of eight years after completion of all testing. Store these records in any format and on any media, as long as you can promptly provide to us organized, written records in English if we ask for them and all the information is retained.

(c) Send us the following information with regard to locomotive production if we ask for it:

(1) Projected production for each configuration within each engine family for which certification has been requested and/or approved.

(2) Number of locomotives, by configuration and assembly plant, scheduled for production.

(d) Nothing in this section limits our authority to require you to establish, maintain, keep or submit to us information not specified by this section. We may also ask you to send less information.

(e) Send all reports, submissions, notifications, and requests for approval made under this subpart to the Designated Compliance Officer using an approved format.

(f) You must keep a copy of all reports submitted under this subpart.

[73 FR 37197, June 30, 2008, as amended at 75 FR 22984, Apr. 30, 2010]

§ 1033.330 Compliance criteria for production line testing.

There are two types of potential failures: failure of an individual locomotive to comply with the standards, and a failure of an engine family to comply with the standards.

(a) A failed locomotive is one whose final test results pursuant to § 1033.320(c), for one or more of the applicable pollutants, exceed an applicable emission standard or FEL.

(b) An engine family is deemed to be in noncompliance, for purposes of this subpart, if at any time throughout the model year, the average of an initial failed locomotive and the two additional locomotives tested, is greater than any applicable emission standard or FEL.

§ 1033.335 Remanufactured locomotives: installation audit requirements.

The section specifies the requirements for certifying remanufacturers to audit the remanufacture of locomotives covered by their certificates of conformity for proper components, component settings and component installations on randomly chosen locomotives in an engine family.

(a) You must ensure that all emission related components are properly installed on the locomotive and are set to the proper specification as indicated in your instructions. You may submit audits performed by the owners/operators of the locomotives, provided the audits are performed in accordance with the provisions of this section. We may require that you obtain affidavits

for audits performed by owners/operators.

(b) Audit at least five percent of your annual production per model year per installer or ten per engine family per installer, whichever is less. You must perform more audits if there are any failures. Randomly select the locomotives to be audited after the remanufacture is complete. We may allow you to select locomotives prior to the completion of the remanufacture, if the preselection would not have the potential to affect the manner in which the locomotive was remanufactured (e.g., where the installer is not aware of the selection prior to the completion of the remanufacture). Unless we specify otherwise, you are not required to audit installers that remanufacture fewer than 10 locomotives per year under your certificates (combined for all of your engine families).

(c) The audit should be completed as soon as is practical after the remanufacture is complete. In no case may the remanufactured locomotive accumulate more than 45,000 miles prior to an audit.

(d) A locomotive fails if any emission related components are found to be improperly installed, improperly adjusted or incorrectly used.

(e) If a remanufactured locomotive fails an audit, then you must audit two additional locomotives from the next ten remanufactured in that engine family by that installer.

(f) An engine family is determined to have failed an audit, if at any time during the model year, you determine that the three locomotives audited are found to have had any improperly installed, improperly adjusted or incorrectly used components. You must notify us within 2 working days of a determination of an engine family audit failure.

(g) Within 45 calendar days of the end of each quarter, the remanufacturer must send the Designated Compliance Officer a report which includes the following information:

(1) The location and description of your audit facilities which were utilized to conduct auditing reported pursuant to this section;

(2) Total production and sample size for each engine family;

(3) The applicable standards and/or FELs against which each engine family was audited;

(4) For each audit conducted:

(i) A description of the audited locomotive, including:

(A) Configuration and engine family identification;

(B) Year, make, build date, and remanufacture date; and

(C) Locomotive and engine identification numbers;

(ii) Any other information we request relevant to the determination whether the new locomotives being remanufactured do in fact conform with the regulations with respect to which the certificate of conformity was issued;

(5) For each failed locomotive as defined in paragraph (d) of this section, a description of the remedy as required by § 1033.340(g);

(6) The following signed statement and endorsement by your authorized representative:

We submit this report under sections 208 and 213 of the Clean Air Act. Our production-line auditing conformed completely with the requirements of 40 CFR part 1033. We have not changed production processes or quality-control procedures for the audited locomotives in a way that might affect emission controls. All the information in this report is true and accurate to the best of my knowledge. I know of the penalties for violating the Clean Air Act and the regulations. (Authorized Company Representative)

[73 FR 37197, June 30, 2008, as amended at 73 FR 59190, Oct. 8, 2008]

§ 1033.340 Suspension and revocation of certificates of conformity.

(a) A certificate can be suspended for an individual locomotive as follows:

(1) The certificate of conformity is automatically suspended for any locomotive that fails a production line test pursuant to § 1033.330(a), effective from the time the testing of that locomotive is completed.

(2) The certificate of conformity is automatically suspended for any locomotive that fails an audit pursuant to § 1033.335(d), effective from the time that auditing of that locomotive is completed.

(b) A certificate can be suspended for an engine family as follows:

(1) We may suspend the certificate of conformity for an engine family that is

in noncompliance pursuant to §1033.330(b), thirty days after the engine family is deemed to be in noncompliance.

(2) We may suspend the certificate of conformity for an engine family that is determined to have failed an audit pursuant to §1033.335(f). This suspension will not occur before thirty days after the engine family is deemed to be in noncompliance.

(c) If we suspend your certificate of conformity for an engine family, the suspension may apply to all facilities producing engines from an engine family, even if you find noncompliant engines only at one facility.

(d) We may revoke a certificate of conformity for any engine family in whole or in part if:

(1) You fail to comply with any of the requirements of this subpart.

(2) You submit false or incomplete information in any report or information provided to us under this subpart.

(3) You render inaccurate any test data submitted under this subpart.

(4) An EPA enforcement officer is denied the opportunity to conduct activities authorized in this subpart.

(5) An EPA enforcement officer is unable to conduct authorized activities for any reason.

(e) We will notify you in writing of any suspension or revocation of a certificate of conformity in whole or in part; a suspension or revocation is effective upon receipt of such notification or thirty days from the time a locomotive or engine family is deemed to be in noncompliance under §§1033.320(d), 1033.330(a), 1033.330(b), or 1033.335(f) is made, whichever is earlier, except that the certificate is immediately suspended with respect to any failed locomotives as provided for in paragraph (a) of this section.

(f) We may revoke a certificate of conformity for an engine family when the certificate has been suspended under paragraph (b) or (c) of this section if the remedy is one requiring a design change or changes to the locomotive, engine and/or emission control system as described in the application for certification of the affected engine family.

(g) Once a certificate has been suspended for a failed locomotive, as provided for in paragraph (a) of this section, you must take all the following actions before the certificate is reinstated for that failed locomotive:

(1) Remedy the nonconformity.

(2) Demonstrate that the locomotive conforms to applicable standards or family emission limits by retesting, or reauditing if applicable, the locomotive in accordance with this part.

(3) Submit a written report to us after successful completion of testing (or auditing, if applicable) on the failed locomotive, which contains a description of the remedy and testing (or auditing) results for each locomotive in addition to other information that may be required by this part.

(h) Once a certificate for a failed engine family has been suspended pursuant to paragraph (b) or (c) of this section, you must take the following actions before we will consider reinstating the certificate:

(1) Submit a written report to us identifying the reason for the noncompliance of the locomotives, describing the remedy, including a description of any quality control measures you will use to prevent future occurrences of the problem, and stating the date on which the remedies will be implemented.

(2) Demonstrate that the engine family for which the certificate of conformity has been suspended does in fact comply with the regulations of this part by testing (or auditing) locomotives selected from normal production runs of that engine family. Such testing (or auditing) must comply with the provisions of this subpart. If you elect to continue testing (or auditing) individual locomotives after suspension of a certificate, the certificate is reinstated for any locomotive actually determined to be in conformance with the applicable standards or family emission limits through testing (or auditing) in accordance with the applicable test procedures, provided that we have not revoked the certificate under paragraph (f) of this section.

(i) If the certificate has been revoked for an engine family, you must take the following actions before we will issue a certificate that would allow you

to continue introduction into commerce of a modified version of that family:

(1) If we determine that the change(s) in locomotive design may have an effect on emission deterioration, we will notify you within five working days after receipt of the report in paragraph (h) of this section, whether subsequent testing/auditing under this subpart will be sufficient to evaluate the change(s) or whether additional testing (or auditing) will be required.

(2) After implementing the change or changes intended to remedy the nonconformity, you must demonstrate that the modified engine family does in fact conform with the regulations of this part by testing locomotives (or auditing for remanufactured locomotives) selected from normal production runs of that engine family. When both of these requirements are met, we will reissue the certificate or issue a new certificate. If this subsequent testing (or auditing) reveals failing data the revocation remains in effect.

(j) At any time subsequent to an initial suspension of a certificate of conformity for a test or audit locomotive pursuant to paragraph (a) of this section, but not later than 30 days (or such other period as may we allow) after the notification our decision to suspend or revoke a certificate of conformity in whole or in part pursuant to this section, you may request a hearing as to whether the tests or audits have been properly conducted or any sampling methods have been properly applied. (See § 1033.920.)

(k) Any suspension of a certificate of conformity under paragraphs (a) through (d) of this section will be made only after you have been offered an opportunity for a hearing conducted in accordance with § 1033.920. It will not apply to locomotives no longer in your possession.

(l) If we suspend, revoke, or void a certificate of conformity, and you believe that our decision was based on erroneous information, you may ask us to reconsider our decision before requesting a hearing. If you demonstrate to our satisfaction that our decision was based on erroneous information, we will reinstate the certificate.

(m) We may conditionally reinstate the certificate for that family so that you do not have to store non-test locomotives while conducting subsequent testing or auditing of the noncomplying family subject to the following condition: you must commit to recall all locomotives of that family produced from the time the certificate is conditionally reinstated if the family fails subsequent testing, or auditing if applicable, and must commit to remedy any nonconformity at no expense to the owner.

Subpart E—In-use Testing

§ 1033.401 Applicability.

The requirements of this subpart are applicable to certificate holders for locomotives subject to the provisions of this part. These requirements may also be applied to other manufacturers/remanufacturers as specified in § 1033.1(d).

§ 1033.405 General provisions.

(a) Each year, we will identify engine families and configurations within families that you must test according to the requirements of this section.

(1) We may require you to test one engine family each year for which you have received a certificate of conformity. If you are a manufacturer that holds certificates of conformity for both freshly manufactured and remanufactured locomotive engine families, we may require you to test one freshly manufactured engine family and one remanufactured engine family. We may require you to test additional engine families if we have reason to believe that locomotives in such families do not comply with emission standards in use.

(2) For engine families of less than 10 locomotives per year, no in-use testing will be required, unless we have reason to believe that those engine families are not complying with the applicable emission standards in use.

(b) Test a sample of in-use locomotives from an engine family, as specified in § 1033.415. We will use these data, and any other data available to us, to determine the compliance status of classes of locomotives, including for purposes of recall under 40 CFR part

1068, and whether remedial action is appropriate.

§ 1033.410 In-use test procedure.

(a) You must test the complete locomotives; you may not test engines that are not installed in locomotives at the time of testing.

(b) Test the locomotive according to the test procedures outlined in subpart F of this part, except as provided in this section.

(c) Use the same test procedures for in-use testing as were used for certification, except for cases in which certification testing was not conducted with a locomotive, but with a development engine or other engine. In such cases, we will specify deviations from the certification test procedures as appropriate. We may allow or require other alternate procedures, with advance approval.

(d) Set all adjustable locomotive or engine parameters to values or positions that are within the range specified in the certificate of conformity. We may require you to set these parameters to specific values.

(e) We may waive a portion of the applicable test procedure that is not necessary to determine in-use compliance.

§ 1033.415 General testing requirements.

(a) *Number of locomotives to be tested.* Determine the number of locomotives to be tested by the following method:

(1) Test a minimum of 2 locomotives per engine family, except as provided in paragraph (a)(2) of this section. You must test additional locomotives if any locomotives fail to meet any standard. Test 2 more locomotives for each failing locomotive, but stop testing if the total number of locomotives tested equals 10.

(2) If an engine family has been certified using carryover emission data from a family that has been previously tested under paragraph (a)(1) of this section (and we have not ordered or begun to negotiate remedial action of that family), you need to test only one locomotive per engine family. If that locomotive fails to meet applicable standards for any pollutant, testing for that engine family must be conducted as outlined under paragraph (a)(1) of this section.

(3) You may ask us to allow you to test more locomotives than the minimum number described above or you may concede failure before testing 10 locomotives.

(b) *Compliance criteria.* We will consider failure rates, average emission levels and the existence of any defects among other factors in determining whether to pursue remedial action. We may order a recall pursuant to 40 CFR part 1068 before testing reaches the tenth locomotive.

(c) *Collection of in-use locomotives.* Procure in-use locomotives that have been operated for 50 to 75 percent of the locomotive's useful life for testing under this subpart. Complete testing required by this section for any engine family before useful life of the locomotives in the engine family passes. (NOTE: § 1033.820 specifies that railroads must make reasonable efforts to enable you to perform this testing.)

§ 1033.420 Maintenance, procurement and testing of in-use locomotives.

(a) A test locomotive must have a maintenance history that is representative of actual in-use conditions, and identical or equivalent to your recommended emission-related maintenance requirements.

(1) When procuring locomotives for in-use testing, ask the end users about the accumulated usage, maintenance, operating conditions, and storage of the test locomotives.

(2) Your selection of test locomotives is subject to our approval. Maintain the information you used to procure locomotives for in-use testing in the same manner as is required in § 1033.250.

(b) You may perform minimal set-to-spec maintenance on a test locomotive before conducting in-use testing. Maintenance may include only that which is listed in the owner's instructions for locomotives with the amount of service and age of the acquired test locomotive. Maintain documentation of all maintenance and adjustments.

(c) If the locomotive selected for testing is equipped with emission diagnostics meeting the requirements in § 1033.110 and the MIL is illuminated, you may read the code and repair the

malfunction according to your emission-related maintenance instructions, but only to the degree that an owner/operator would be required to repair the malfunction under § 1033.815.

(d) Results of at least one valid set of emission tests using the test procedure described in subpart F of this part is required for each in-use locomotive.

(e) If in-use testing results show that an in-use locomotive fails to comply with any applicable emission standards, you must determine the reason for noncompliance and report your findings in the quarterly in-use test result report described in § 1033.425.

§ 1033.425 In-use test program reporting requirements.

(a) Within 90 days of completion of testing, send us all emission test results generated from the in-use testing program. Report all of the following information for each locomotive tested:

(1) Engine family, and configuration.

(2) Locomotive and engine models.

(3) Locomotive and engine serial numbers.

(4) Date of manufacture or remanufacture, as applicable.

(5) Megawatt-hours of use (or miles, as applicable).

(6) Date and time of each test attempt.

(7) Results of all emission testing.

(8) Results (if any) of each voided or failed test attempt.

(9) Summary of all maintenance and/or adjustments performed.

(10) Summary of all modifications and/or repairs.

(11) Determinations of noncompliance.

(12) The following signed statement and endorsement by an authorized representative of your company.

We submit this report under sections 208 and 213 of the Clean Air Act. Our in-use testing conformed completely with the requirements of 40 CFR part 1033. All the information in this report is true and accurate to the best of my knowledge. I know of the penalties for violating the Clean Air Act and the regulations. (Authorized Company Representative)

(b) Report to us within 90 days of completion of testing the following information for each engine family tested:

(1) The serial numbers of all locomotive that were excluded from the test sample because they did not meet the maintenance requirements of § 1033.420.

(2) The owner of each locomotive identified in paragraph (b)(1) of this section (or other entity responsible for the maintenance of the locomotive).

(3) The specific reasons why the locomotives were excluded from the test sample.

(c) Submit the information outlined in paragraphs (a) and (b) of this section electronically using an approved format. We may exempt you from this requirement upon written request with supporting justification.

(d) Send all testing reports and requests for approvals to the Designated Compliance Officer.

Subpart F—Test Procedures

§ 1033.501 General provisions.

(a) Except as specified in this subpart, use the equipment and procedures for compression-ignition engines in 40 CFR part 1065 to determine whether your locomotives meet the duty-cycle emission standards in § 1033.101. Use the applicable duty cycles specified in this subpart. Measure emissions of all the pollutants we regulate in § 1033.101 plus CO_2. Measure N_2O, and CH_4 as described in § 1033.235. The general test procedure is the procedure specified in 40 CFR part 1065 for steady-state discrete-mode cycles. However, if you use the optional ramped modal cycle in § 1033.520, follow the procedures for ramped modal testing in 40 CFR part 1065. The following exceptions from the 1065 procedures apply:

(1) You must average power and emissions over the sampling periods specified in this subpart for both discrete-mode testing and ramped modal testing.

(2) The test cycle is considered to be steady-state with respect to operator demand rather than engine speed and load.

(3) The provisions related to engine mapping and duty cycle generation (40

CFR 1065.510 and 1065.512) are not applicable to testing of complete locomotives or locomotive engines because locomotive operation and locomotive duty cycles are based on operator demand via locomotive notch settings rather than engine speeds and loads. The cycle validation criteria (40 CFR 1065.514) are not applicable to testing of complete locomotives but do apply for dynamometer testing of engines.

(b) You may use special or alternate procedures to the extent we allow as them under 40 CFR 1065.10. In some cases, we allow you to use procedures that are less precise or less accurate than the specified procedures if they do not affect your ability to show that your locomotives comply with the applicable emission standards. This generally requires emission levels to be far enough below the applicable emission standards so that any errors caused by greater imprecision or inaccuracy do not affect your ability to state unconditionally that the locomotives meet all applicable emission standards.

(c) This part allows (with certain limits) testing of either a complete locomotive or a separate uninstalled engine. When testing a locomotive, you must test the complete locomotive in its in-use configuration, except that you may disconnect the power output and fuel input for the purpose of testing. To calculate power from measured alternator/generator output, use an alternator/generator efficiency curve that varies with speed/load, consistent with good engineering judgment.

(d) Unless smoke standards do not apply for your locomotives or the testing requirement is waived, measure smoke emissions using the procedures in § 1033.525.

(e) Use the applicable fuel listed in 40 CFR part 1065, subpart H, to perform valid tests.

(1) For diesel-fueled locomotives, use the appropriate diesel fuel specified in 40 CFR part 1065, subpart H, for emission testing. The applicable diesel test fuel is either the ultra low-sulfur diesel or low-sulfur diesel fuel, as specified in § 1033.101. Identify the test fuel in your application for certification and ensure that the fuel inlet label is consistent with your selection of the test fuel (see §§ 1033.101 and 1033.135).

(2) You may ask to use as a test fuel commercially available diesel fuel similar but not identical to the applicable fuel specified in 40 CFR part 1065, subpart H; we will approve your request if you show us that it does not affect your ability to demonstrate compliance with the applicable emission standards. If your locomotive uses sulfur-sensitive technology, you may not use an in-use fuel that has a lower sulfur content than the range specified for the otherwise applicable test fuel in 40 CFR part 1065. If your locomotive does not use sulfur-sensitive technology, we may allow you to use an in-use fuel that has a lower sulfur content than the range specified for the otherwise applicable test fuel in 40 CFR part 1065, but may require that you correct PM emissions to account for the sulfur differences.

(3) For service accumulation, use the test fuel or any commercially available fuel that is representative of the fuel that in-use locomotives will use.

(f) See § 1033.505 for information about allowable ambient testing conditions for testing.

(g) This subpart is addressed to you as a manufacturer/remanufacturer, but it applies equally to anyone who does testing for you, and to us when we perform testing to determine if your locomotives meet emission standards.

(h) We may also perform other testing as allowed by the Clean Air Act.

(i) For passenger locomotives that can generate hotel power from the main propulsion engine, the locomotive must comply with the emission standards when in non-hotel setting. For hotel mode, the locomotive is subject to the notch cap provisions of § 1033.101 and the defeat device prohibition of § 1033.115.

[73 FR 37197, June 30, 2008, as amended at 74 FR 56508, Oct. 30, 2008; 75 FR 22984, Apr. 30, 2010]

§ 1033.505 Ambient conditions.

This section specifies the allowable ambient conditions (including temperature and pressure) under which testing may be performed to determine compliance with the emission standards of § 1068.101. Manufacturers/remanufacturers may ask to perform testing at conditions other than those

allowed by this section. We will allow such testing provided it does not affect your ability to demonstrate compliance with the applicable standards. See §§ 1033.101 and 1033.115 for more information about the requirements that apply at other conditions.

(a) *Temperature.* (1) Testing may be performed with ambient temperatures from 15.5 °C (60 °F) to 40.5 °C (105 °F). Do not correct emissions for temperature effects within this range.

(2) It is presumed that combustion air will be drawn from the ambient air. Thus, the ambient temperature limits of this paragraph (a) apply for intake air upstream of the engine. If you do not draw combustion air from the ambient air, use good engineering judgment to ensure that any temperature difference (between the ambient air and combustion air) does not cause the emission measurement to be unrepresentative of in-use emissions.

(3) If we allow you to perform testing at ambient temperatures below 15.5 °C, you must correct NO_X emissions for temperature effects, consistent with good engineering judgment. For example, if the intake air temperature (at the manifold) is lower at the test temperature than it would be for equivalent operation at an ambient temperature of 15.5 °C, you generally will need to adjust your measured NO_X emissions to account for the effect of the lower intake air temperature. However, if you maintain a constant manifold air temperature, you will generally not need to correct emissions.

(b) *Altitude/pressure.* Testing may be performed with ambient pressures from 88.000 kPa (26.0 in Hg) to 103.325 kPa (30.5 in Hg). This is intended to correspond to altitudes up to 4000 feet above sea level. Do not correct emissions for pressure effects within this range.

(c) *Humidity.* Testing may be performed with any ambient humidity level. Correct NO_X emissions as specified in 40 CFR 1065.670. Do not correct any other emissions for humidity effects.

(d) *Wind.* If you test outdoors, use good engineering judgment to ensure that excessive wind does not affect your emission measurements. Winds are excessive if they disturb the size, shape, or location of the exhaust plume in the region where exhaust samples are drawn or where the smoke plume is measured, or otherwise cause any dilution of the exhaust. Tests may be conducted if wind shielding is placed adjacent to the exhaust plume to prevent bending, dispersion, or any other distortion of the exhaust plume as it passes through the optical unit or through the sample probe.

[73 FR 37197, June 30, 2008, as amended at 75 FR 22984, Apr. 30, 2010]

§ 1033.510 Auxiliary power units.

If your locomotive is equipped with an auxiliary power unit (APU) that operates during an idle shutdown mode, you must account for the APU's emissions rates as specified in this section, unless the APU is part of an AESS system that was certified separately from the rest of the locomotive. This section does not apply for auxiliary engines that only provide hotel power.

(a) Adjust the locomotive main engine's idle emission rate (g/hr) as specified in § 1033.530. Add the APU emission rate (g/hr) that you determine under paragraph (b) of this section. Use the locomotive main engine's idle power as specified in § 1033.530.

(b) Determine the representative emission rate for the APU using one of the following methods.

(1) *Installed APU tested separately.* If you separately measure emission rates (g/hr) for each pollutant from the APU installed in the locomotive, you may use the measured emissions rates (g/hr) as the locomotive's idle emissions rates when the locomotive is shutdown and the APU is operating. For all testing other than in-use testing, apply appropriate deterioration factors to the measured emission rates. You may ask to carryover APU emission data for a previous test, or use data for the same APU installed on locomotives in another engine family.

(2) *Uninstalled APU tested separately.* If you separately measure emission rates (g/hr) over an appropriate duty-cycle for each pollutant from the APU when it is not installed in the locomotive, you may use the measured emissions rates (g/hr) as the locomotive's idle emissions rates when the locomotive is shutdown and the APU is

operating. For the purpose of this paragraph (b)(2), an appropriate duty-cycle is one that approximates the APU engine's cycle-weighted power when operating in the locomotive. Apply appropriate deterioration factors to the measured emission rates. You may ask to carryover APU emission data for a previous test, or use data for the same APU installed on locomotives in another engine family.

(3) *APU engine certification data*. If the engine used for the APU has been certified to EPA emission standards you may calculate the APU's emissions based upon existing EPA-certification information about the APU's engine. In this case, calculate the APU's emissions as follows:

(i) For each pollutant determine the brake-specific standard/FEL to which the APU engine was originally EPA-certified.

(ii) Determine the APU engine's cycle-weighted power when operating in the locomotive.

(iii) Multiply each of the APU's applicable brake-specific standards/FELs by the APU engine's cycle-weighted power. The results are the APU's emissions rates (in g/hr).

(iv) Use these emissions rates as the locomotive's idle emissions rates when the locomotive is shutdown and the APU is running. Do not apply a deterioration factor to these values.

(4) *Other*. You may ask us to approve an alternative means to account for APU emissions.

[73 FR 37197, June 30, 2008, as amended at 73 FR 59190, Oct. 8, 2008]

§ 1033.515 Discrete-mode steady-state emission tests of locomotives and locomotive engines.

This section describes how to test locomotives at each notch setting so that emissions can be weighted according to either the line-haul duty cycle or the switch duty cycle. The locomotive test cycle consists of a warm-up followed by a sequence of nominally steady-state discrete test modes, as described in Table 1 to this section. The test modes are steady-state with respect to operator demand, which is the notch setting for the locomotive. Engine speeds and loads are not necessarily steady-state.

(a) Follow the provisions of 40 CFR part 1065, subpart F for general pre-test procedures (including engine and sampling system pre-conditioning which is included as engine warm-up). You may operate the engine in any way you choose to warm it up prior to beginning the sample preconditioning specified in 40 CFR part 1065.

(b) Begin the test by operating the locomotive over the pre-test portion of the cycle specified in Table 1 to this section. For locomotives not equipped with catalysts, you may begin the test as soon as the engine reaches its lowest idle setting. For catalyst-equipped locomotives, you may begin the test in normal idle mode if the engine does not reach its lowest idle setting within 15 minutes. If you do start in normal idle, run the low idle mode after normal idle, then resume the specified mode sequence (without repeating the normal idle mode).

(c) Measure emissions during the rest of the test cycle.

(1) Each test mode begins when the operator demand to the locomotive or engine is set to the applicable notch setting.

(2) Start measuring gaseous emissions, power, and fuel consumption at the start of the test mode A and continue until the completion of test mode 8. You may zero and span analyzers between modes (or take other actions consistent with good engineering judgment).

(i) The sample period over which emissions for the mode are averaged generally begins when the operator demand is changed to start the test mode and ends within 5 seconds of the minimum sampling time for the test mode is reached. However, you need to shift the sampling period to account for sample system residence times. Follow the provisions of 40 CFR 1065.308 and 1065.309 to time align emission and work measurements.

(ii) The sample period is 300 seconds for all test modes except mode 10. The sample period for test mode 8 is 600 seconds.

(3) If gaseous emissions are sampled using a batch-sampling method, begin proportional sampling at the beginning of each sampling period and terminate

sampling once the minimum time in each test mode is reached, ± 5 seconds.

(4) If applicable, begin the smoke test at the start of the test mode A. Continue collecting smoke data until the completion of test mode 8. Refer to § 1033.101 to determine applicability of smoke testing and § 1033.525 for details on how to conduct a smoke test.

(5) Begin proportional sampling of PM emissions at the beginning of each sampling period and terminate sampling within ± 5 seconds of the specified time in each test mode. If the PM sample is not sufficiently large, take one of the following actions consistent with good engineering judgment:

(i) Extend the sampling period up to a maximum of 15 minutes.

(ii) Group the modes in the same manner as the phases of the ramped modal cycle and use three different dilution settings for the groups. Use one setting for both idle modes, one for dynamic brake through notch 5, and one for notches 6 through 8. For each group, ensure that the mode with the highest exhaust flow (typically normal idle, notch 5, and notch 8) meets the criteria for minimum dilution ratio in 40 CFR part 1065.

(6) Proceed through each test mode in the order specified in Table 1 to this section until the locomotive test cycle is completed.

(7) At the end of each numbered test mode, you may continue to operate sampling and dilution systems to allow corrections for the sampling system's response time.

(8) Following the completion of Mode 8, conduct the post sampling procedures in § 1065.530. Note that cycle validation criteria do not apply to testing of complete locomotives.

TABLE 1 TO § 1033.515—LOCOMOTIVE TEST CYCLE

Test mode	Notch setting	Time in mode (minutes) [1]	Sample averaging period for emissions [1]
Pre-test idle	Lowest idle setting	10 to 15 [3]	Not applicable
A	Low idle [2]	5 to 10	300 ± 5 seconds
B	Normal idle	5 to 10	300 ± 5 seconds
C	Dynamic brake [2]	5 to 10	300 ± 5 seconds
1	Notch 1	5 to 10	300 ± 5 seconds
2	Notch 2	5 to 10	300 ± 5 seconds
3	Notch 3	5 to 10	300 ± 5 seconds
4	Notch 4	5 to 10	300 ± 5 seconds
5	Notch 5	5 to 10	300 ± 5 seconds
6	Notch 6	5 to 10	300 ± 5 seconds
7	Notch 7	5 to 10	300 ± 5 seconds
8	Notch 8	10 to 15	600 ± 5 seconds

[1] The time in each notch and sample averaging period may be extended as needed to allow for collection of a sufficiently large PM sample.
[2] Omit if not so equipped.
[3] See paragraph (b) of this section for alternate pre-test provisions.

(d) Use one of the following approaches for sampling PM emissions during discrete-mode steady-state testing:

(1) *Engines certified to a PM standard/FEL at or above 0.05 g/bhp-hr.* Use a separate PM filter sample for each test mode of the locomotive test cycle according to the procedures specified in paragraph (a) through (c) of this section. You may ask to use a shorter sampling period if the total mass expected to be collected would cause unacceptably high pressure drop across the filter before reaching the end of the required sampling time. We will not allow sampling times shorter than 60 seconds. When we conduct locomotive emission tests, we will adhere to the time limits for each of the numbered modes in Table 1 to this section.

(2) *Engines certified to a PM standard/FEL below 0.05 g/bhp-hr.* (i) You may use separate PM filter samples for each test mode as described in paragraph (d)(1) of this section; however, we recommend that you do not. The low rate of sample filter loading will result in very long sampling times and the large number of filter samples may induce uncertainty stack-up that will lead to unacceptable PM measurement accuracy. Instead, we recommend that you

measure PM emissions as specified in paragraph (d)(2)(ii) of this section.

(ii) You may use a single PM filter for sampling PM over all of the test modes of the locomotive test cycle as specified in this paragraph (d)(2). Vary the sample time to be proportional to the applicable line-haul or switch weighting factors specified in § 1033.530 for each mode. The minimum sampling time for each mode is 400 seconds multiplied by the weighting factor. For example, for a mode with a weighting factor of 0.030, the minimum sampling time is 12.0 seconds. PM sampling in each mode must be proportional to engine exhaust flow as specified in 40 CFR part 1065. Begin proportional sampling of PM emissions at the beginning of each test mode as is specified in paragraph (c) of this section. End the sampling period for each test mode so that sampling times are proportional to the weighting factors for the applicable duty cycles. If necessary, you may extend the time limit for each of the test modes beyond the sampling times in Table 1 to this section to increase the sampled mass of PM emissions or to account for proper weighting of the PM emission sample over the entire cycle, using good engineering judgment.

(e) This paragraph (e) describes how to test locomotive engines when not installed in a locomotive. Note that the test procedures for dynamometer engine testing of locomotive engines are intended to produce emission measurements that are the same as emission measurements produced during testing of complete locomotives using the same engine configuration. The following requirements apply for all engine tests:

(1) Specify a second-by-second set of engine speed and load points that are representative of in-use locomotive operation for each of the set-points of the locomotive test cycle described in Table 1 to this section, including transitions from one notch to the next. This is your reference cycle for validating your cycle. You may ignore points between the end of the sampling period for one mode and the point at which you change the notch setting to begin the next mode.

(2) Keep the temperature of the air entering the engine after any charge air cooling to within 5 °C of the typical intake manifold air temperature when the engine is operated in the locomotive under similar ambient conditions.

(3) Proceed as specified in paragraphs (a) through (d) of this section for testing complete locomotives.

[73 FR 37197, June 30, 2008, as amended at 73 FR 59190, Oct. 8, 2008; 74 FR 8424, Feb. 24, 2009; 75 FR 22985, Apr. 30, 2010]

§ 1033.520 Alternative ramped modal cycles.

(a) Locomotive testing over a ramped modal cycle is intended to improve measurement accuracy at low emission levels by allowing the use of batch sampling of PM and gaseous emissions over multiple locomotive notch settings. Ramped modal cycles combine multiple test modes of a discrete-mode steady-state into a single sample period. Time in notch is varied to be proportional to weighting factors. The ramped modal cycle for line-haul locomotives is shown in Table 1 to this section. The ramped modal cycle for switch locomotives is shown in Table 2 to this section. Both ramped modal cycles consist of a warm-up followed by three test phases that are each weighted in a manner that maintains the duty cycle weighting of the line-haul and switch locomotive duty cycles in § 1033.530. You may use ramped modal cycle testing for any locomotives certified under this part.

(b) Ramped modal testing requires continuous gaseous analyzers and three separate PM filters (one for each phase). You may collect a single batch sample for each test phase, but you must also measure gaseous emissions continuously to allow calculation of notch caps as required under § 1033.101.

(c) You may operate the engine in any way you choose to warm it up. Then follow the provisions of 40 CFR part 1065, subpart F for general pre-test procedures (including engine and sampling system pre-conditioning).

(d) Begin the test by operating the locomotive over the pre-test portion of the cycle. For locomotives not equipped with catalysts, you may begin the test as soon as the engine reaches

its lowest idle setting. For catalyst-equipped locomotives, you may begin the test in normal idle mode if the engine does not reach its lowest idle setting within 15 minutes. If you do start in normal idle, run the low idle mode after normal idle, then resume the specified mode sequence (without repeating the normal idle mode).

(e) Start the test according to 40 CFR 1065.530.

(1) Each test phase begins when operator demand is set to the first operator demand setting of each test phase of the ramped modal cycle. Each test phase ends when the time in mode is reached for the last mode in the test phase.

(2) For PM emissions (and other batch sampling), the sample period over which emissions for the phase are averaged generally begins within 10 seconds after the operator demand is changed to start the test phase and ends within 5 seconds of the sampling time for the test mode is reached. (see Table 1 to this section). You may ask to delay the start of the sample period to account for sample system residence times longer than 10 seconds.

(3) Use good engineering judgment when transitioning between phases.

(i) You should come as close as possible to simultaneously:

(A) Ending batch sampling of the previous phase.

(B) Starting batch sampling of the next phase.

(C) Changing the operator demand to the notch setting for the first mode in the next phase.

(ii) Avoid the following:

(A) Overlapping batch sampling of the two phases.

(B) An unnecessarily long delay before starting the next phase.

(iii) For example, the following sequence would generally be appropriate:

(A) End batch sampling for phase 2 after 240 seconds in notch 7.

(B) Switch the operator demand to notch 8 one second later.

(C) Begin batch sampling for phase 3 one second after switching to notch 8.

(4) If applicable, begin the smoke test at the start of the first test phase of the applicable ramped modal cycle. Continue collecting smoke data until the completion of final test phase. Refer to § 1033.101 to determine applicability of the smoke standards and § 1033.525 for details on how to conduct a smoke test.

(5) Proceed through each test phase of the applicable ramped modal cycle in the order specified until the test is completed.

(6) If you must void a test phase you may repeat the phase. To do so, begin with a warm engine operating at the notch setting for the last mode in the previous phase. You do not need to repeat later phases if they were valid. (NOTE: you must report test results for all voided tests and test phases.)

(7) Following the completion of the third test phase of the applicable ramped modal cycle, conduct the post sampling procedures specified in 40 CFR 1065.530.

(f) Calculate your cycle-weighted brake-specific emission rates as follows:

(1) For each test phase j:

(i) Calculate emission rates (E_{ij}) for each pollutant i as the total mass emissions divided by the total time in the phase.

(ii) Calculate average power (P_j) as the total work divided by the total time in the phase.

(2) For each pollutant, calculate your cycle-weighted brake-specific emission rate using the following equation, where w_j is the weighting factor for phase j:

$$E_{ij} = \frac{w_1 E_{i1} + w_2 E_{i2} + w_3 E_{i3}}{w_1 P_1 + w_2 P_2 + w_3 P_3}$$

(g) The following tables define applicable ramped modal cycles for line-haul and switch locomotives:

TABLE 1 TO § 1033.520—LINE-HAUL LOCOMOTIVE RAMPED MODAL CYCLE

RMC test phase	Weighting factor	RMC mode	Time in mode (seconds)	Notch setting
Pre-test idle	NA	NA	600 to 900	Lowest idle setting [1]
Phase 1		A	600	Low Idle.[2]

TABLE 1 TO § 1033.520—LINE-HAUL LOCOMOTIVE RAMPED MODAL CYCLE—Continued

RMC test phase	Weighting factor	RMC mode	Time in mode (seconds)	Notch setting
Pre-test idle	NA	NA	600 to 900	Lowest idle setting [1]
(Idle test)	0.380	B	600	Normal Idle.
Phase Transition				
Phase 2	0.389	C	1000	Dynamic Brake.[3]
		1	520	Notch 1.
		2	520	Notch 2.
		3	416	Notch 3.
		4	352	Notch 4.
		5	304	Notch 5.
Phase Transition				
Phase 3	0.231	6	144	Notch 6.
		7	111	Notch 7.
		8	600	Notch 8.

[1] See paragraph (d) of this section for alternate pre-test provisions.
[2] Operate at normal idle for modes A and B if not equipped with multiple idle settings.
[3] Operate at normal idle if not equipped with a dynamic brake.

TABLE 2 TO § 1033.520—SWITCH LOCOMOTIVE RAMPED MODAL CYCLE

RMC test phase	Weighting factor	RMC mode	Time in mode (seconds)	Notch setting
Pre-test idle	NA	NA	600 to 900	Lowest idle setting [1]
Phase 1	0.598	A	600	Low Idle.[2]
(Idle test)		B	600	Normal Idle.
Phase Transition				
Phase 2	0.377	1	868	Notch 1.
		2	861	Notch 2.
		3	406	Notch 3.
		4	252	Notch 4.
		5	252	Notch 5.
Phase Transition				
Phase 3	0.025	6	1080	Notch 6.
		7	144	Notch 7.
		8	576	Notch 8.

[1] See paragraph (d) of this section for alternate pre-test provisions.
[2] Operate at normal idle for modes A and B if not equipped with multiple idle settings.

[73 FR 37197, June 30, 2008, as amended at 74 FR 8424, Feb. 24, 2009]

§ 1033.525 Smoke testing.

This section describes the equipment and procedures for testing for smoke emissions when is required.

(a) This section specifies how to measure smoke emissions using a full-flow, open path light extinction smokemeter. A light extinction meter consists of a built-in light beam that traverses the exhaust smoke plume that issues from exhaust the duct. The light beam must be at right angles to the axis of the plume. Align the light beam to go through the plume along the hydraulic diameter (defined in 1065.1001) of the exhaust stack. Where it is difficult to align the beam to have a path length equal to the hydraulic diameter (such as a long narrow rectangular duct), you may align the beam to have a different path length and correct it to be equivalent to a path length equal to the hydraulic diameter. The light extinction meter must meet the requirements of paragraph (b) of this section and the following requirements:

(1) Use an incandescent light source with a color temperature range of 2800K to 3250K, or a light source with a spectral peak between 550 and 570 nanometers.

(2) Collimate the light beam to a nominal diameter of 3 centimeters and an angle of divergence within a 6 degree included angle.

(3) Use a photocell or photodiode light detector. If the light source is an incandescent lamp, use a detector that has a spectral response similar to the photopic curve of the human eye (a maximum response in the range of 550 to 570 nanometers, to less than four percent of that maximum response below 430 nanometers and above 680 nanometers).

(4) Attach a collimating tube to the detector with apertures equal to the beam diameter to restrict the viewing angle of the detector to within a 16 degree included angle.

(5) Amplify the detector signal corresponding to the amount of light.

(6) You may use an air curtain across the light source and detector window assemblies to minimize deposition of smoke particles on those surfaces, provided that it does not measurably affect the opacity of the plume.

(7) Minimize distance from the optical centerline to the exhaust outlet; in no case may it be more than 3.0 meters. The maximum allowable distance of unducted space upstream of the optical centerline is 0.5 meters. Center the full flow of the exhaust stream between the source and detector apertures (or windows and lenses) and on the axis of the light beam.

(8) You may use light extinction meters employing substantially identical measurement principles and producing substantially equivalent results, but which employ other electronic and optical techniques.

(b) All smokemeters must meet the following specifications:

(1) A full-scale deflection response time of 0.5 second or less.

(2) You may attenuate signal responses with frequencies higher than 10 Hz with a separate low-pass electronic filter with the following performance characteristics:

(i) Three decibel point: 10 Hz.

(ii) Insertion loss: 0.0 ± 0.5 dB.

(iii) Selectivity: 12 dB down at 40 Hz minimum.

(iv) Attenuation: 27 dB down at 40 Hz minimum.

(c) Perform the smoke test by continuously recording smokemeter response over the entire locomotive test cycle in percent opacity to within one percent resolution and also simultaneously record operator demand set point (e.g., notch position). Compare the recorded opacities to the smoke standards applicable to your locomotive.

(d) You may use a partial flow sampling smokemeter if you correct for the path length of your exhaust plume. If you use a partial flow sampling meter, follow the instrument manufacturer's installation, calibration, operation, and maintenance procedures.

§ 1033.530 Duty cycles and calculations.

This section describes how to apply the duty cycle to measured emission rates to calculate cycle-weighted average emission rates.

(a) *Standard duty cycles and calculations.* Tables 1 and 2 of this section show the duty cycle to use to calculate cycle-weighted average emission rates for locomotives equipped with two idle settings, eight propulsion notches, and at least one dynamic brake notch and tested using the Locomotive Test Cycle. Use the appropriate weighting factors for your locomotive application and calculate cycle-weighted average emissions as specified in 40 CFR part 1065, subpart G.

TABLE 1 TO § 1033.530—STANDARD DUTY CYCLE WEIGHTING FACTORS FOR CALCULATING EMISSION RATES FOR LOCOMOTIVES WITH MULTIPLE IDLE SETTINGS

Notch setting	Test mode	Line-haul weighting factors	Line-haul weighting factors (no dynamic brake)	Switch weighting factors
Low Idle	A	0.190	0.190	0.299

TABLE 1 TO § 1033.530—STANDARD DUTY CYCLE WEIGHTING FACTORS FOR CALCULATING EMISSION RATES FOR LOCOMOTIVES WITH MULTIPLE IDLE SETTINGS—Continued

Notch setting	Test mode	Line-haul weighting factors	Line-haul weighting factors (no dynamic brake)	Switch weighting factors
Normal Idle	B	0.190	0.315	0.299
Dynamic Brake	C	0.125	(1)	0.000
Notch 1	1	0.065	0.065	0.124
Notch 2	2	0.065	0.065	0.123
Notch 3	3	0.052	0.052	0.058
Notch 4	4	0.044	0.044	0.036
Notch 5	5	0.038	0.038	0.036
Notch 6	6	0.039	0.039	0.015
Notch 7	7	0.030	0.030	0.002
Notch 8	8	0.162	0.162	0.008

[1] Not applicable.

TABLE 2 TO § 1033.530—STANDARD DUTY CYCLE WEIGHTING FACTORS FOR CALCULATING EMISSION RATES FOR LOCOMOTIVES WITH A SINGLE IDLE SETTING

Notch setting	Test mode	Line-haul	Line-haul (no dynamic brake)	Switch
Normal Idle	A	0.380	0.505	0.598
Dynamic Brake	C	0.125	(1)	0.000
Notch 1	1	0.065	0.065	0.124
Notch 2	2	0.065	0.065	0.123
Notch 3	3	0.052	0.052	0.058
Notch 4	4	0.044	0.044	0.036
Notch 5	5	0.038	0.038	0.036
Notch 6	6	0.039	0.039	0.015
Notch 7	7	0.030	0.030	0.002
Notch 8	8	0.162	0.162	0.008

[1] Not applicable.

(b) *Idle and dynamic brake notches.* The test procedures generally require you to measure emissions at two idle settings and one dynamic brake, as follows:

(1) If your locomotive is equipped with two idle settings and one or more dynamic brake settings, measure emissions at both idle settings and the worst case dynamic brake setting, and weight the emissions as specified in the applicable table of this section. Where it is not obvious which dynamic brake setting represents worst case, do one of the following:

(i) You may measure emissions and power at each dynamic brake point and average them together.

(ii) You may measure emissions and power at the dynamic brake point with the lowest power.

(2) If your locomotive is equipped with two idle settings and is not equipped with dynamic brake, use a normal idle weighting factor of 0.315 for the line-haul cycle. If your locomotive is equipped with only one idle setting and no dynamic brake, use an idle weighting factor of 0.505 for the line-haul cycle.

(c) *Nonstandard notches or no notches.* If your locomotive is equipped with more or less than 8 propulsion notches, recommend an alternate test cycle based on the in-use locomotive configuration. Unless you have data demonstrating that your locomotive will be operated differently from conventional locomotives, recommend weighting factors that are consistent with the power weightings of the specified duty cycle. For example, the average load factor for your recommended cycle (cycle-weighted power divided by rated power) should be equivalent to those of conventional locomotives. We may also allow the use of the standard power levels shown in Table 3 to this section for nonstandard locomotive testing subject to our prior approval.

This paragraph (c) does not allow engines to be tested without consideration of the actual notches that will be used.

TABLE 3 TO § 1033.530—STANDARD NOTCH POWER LEVELS EXPRESSED AS A PERCENTAGE OF RATED POWER

	Percent
Normal Idle	0.00
Dynamic Brake	0.00
Notch 1	4.50
Notch 2	11.50
Notch 3	23.50
Notch 4	35.00
Notch 5	48.50
Notch 6	64.00
Notch 7	85.00
Notch 8	100.00

(d) *Optional Ramped Modal Cycle Testing.* Tables 1 and 2 of § 1033.520 show the weighting factors to use to calculate cycle-weighted average emission rates for the applicable locomotive ramped modal cycle. Use the weighting factors for the ramped modal cycle for your locomotive application and calculate cycle-weighted average emissions as specified in 40 CFR part 1065, subpart G.

(e) *Automated Start-Stop.* For a locomotive equipped with features that shut the engine off after prolonged periods of idle, multiply the measured idle mass emission rate over the idle portion of the applicable test cycles by a factor equal to one minus the estimated fraction reduction in idling time that will result in use from the shutdown feature. Do not apply this factor to the weighted idle power. Application of this adjustment is subject to our approval if the fraction reduction in idling time that is estimated to result from the shutdown feature is greater than 25 percent. This paragraph (e) does not apply if the locomotive is (or will be) covered by a separate certificate for idle control.

(f) *Multi-engine locomotives.* This paragraph (f) applies for locomotives using multiple engines where all engines are identical in all material respects. In cases where we allow engine dynamometer testing, you may test a single engine consistent with good engineering judgment, as long as you test it at the operating points at which the engines will operate when installed in the locomotive (excluding stopping and starting). Weigh the results to reflect the power demand/power-sharing of the in-use configuration for each notch setting.

(g) *Representative test cycles for freshly manufactured locomotives.* As specified in this paragraph (g), manufacturers may be required to use an alternate test cycle for freshly manufactured Tier 3 and later locomotives.

(1) If you determine that you are adding design features that will make the expected average in-use duty cycle for any of your freshly manufactured locomotive engine families significantly different from the otherwise applicable test cycle (including weighting factors), you must notify us and recommend an alternate test cycle that represents the expected average in-use duty cycle. You should also obtain preliminary approval before you begin collecting data to support an alternate test cycle. We will specify whether to use the default duty cycle, your recommended cycle, or a different cycle, depending on which cycle we believe best represents expected in-use operation.

(2) The provisions of this paragraph (g) apply differently for different types of locomotives, as follows:

(i) For Tier 4 and later line-haul locomotives, use the cycle required by (g)(1) of this section to show compliance with the line-haul cycle standards.

(ii) For Tier 3 and later switch locomotives, use the cycle required by (g)(1) of this section to show compliance with the switch cycle standards.

(iii) For Tier 3 line-haul locomotives, if we specify an alternate cycle, use it to show compliance with the line-haul cycle standards. If you include the locomotives in the ABT program of subpart H of this part, calculate line-haul cycle credits (positive or negative) using the alternate cycle and the line-haul cycle standards. Your locomotive is deemed to also generate an equal amount of switch cycle credits.

(3) For all locomotives certified using an alternate cycle, include a description of the cycle in the owners manual such that the locomotive can be remanufactured using the same cycle.

(4) For example, if your freshly manufactured line-haul locomotives are

equipped with load control features that modify how the locomotive will operate when it is in a consist, and such features will cause the locomotives to operate differently from the otherwise applicable line-haul cycle, we may require you to certify using an alternate cycle.

(5) See paragraph (h) of this section for cycle-changing design features that also result in energy savings.

(h) *Calculation adjustments for energy-saving design features.* The provisions of this paragraph (h) apply for locomotives equipped with new energy-saving locomotive design features. They do not apply for features that only improve the engine's brake-specific fuel consumption. They also do not apply for features that were commonly incorporated in locomotives before 2008. *See* paragraph (h)(6) of this section for provisions related to determining whether certain features are considered to have been commonly incorporated in locomotives before 2008.

(1) Manufacturers/remanufacturers choosing to adjust emissions under this paragraph (h) must do all of the following for certification:

(i) Describe the energy-saving features in your application for certification.

(ii) Describe in your installation instruction and/or maintenance instructions all steps necessary to utilize the energy-saving features.

(2) If your design feature will also affect the locomotives' duty cycle, you must comply with the requirements of paragraph (g) of this section.

(3) Calculate the energy savings as follows:

(i) Estimate the expected mean in-use fuel consumption rate (on a BTU per ton-mile basis) with and without the energy saving design feature, consistent with the specifications of paragraph (h)(4) of this section. The energy savings is the ratio of fuel consumed from a locomotive operating with the new feature to fuel consumed from a locomotive operating without the feature under identical conditions. Include an estimate of the 80 percent confidence interval for your estimate of the mean and other statistical parameters we specify.

(ii) Your estimate must be based on in-use operating data, consistent with good engineering judgment. Where we have previously certified your design feature under this paragraph (h), we may require you to update your analysis based on all new data that are available. You must obtain approval before you begin collecting operational data for this purpose.

(iii) We may allow you to consider the effects of your design feature separately for different route types, regions, or railroads. We may require that you certify these different locomotives in different engine families and may restrict their use to the specified applications.

(iv) Design your test plan so that the operation of the locomotives with and without is as similar as possible in all material aspects (other than the design feature being evaluated). Correct all data for any relevant differences, consistent with good engineering judgment.

(v) Do not include any brake-specific energy savings in your calculated values. If it is not possible to exclude such effects from your data gathering, you must correct for these effects, consistent with good engineering judgment.

(4) Calculate adjustment factors as described in this paragraph (h)(4). If the energy savings will apply broadly, calculate and apply the adjustment on a cycle-weighted basis. Otherwise, calculate and apply the adjustment separately for each notch. To apply the adjustment, multiply the emissions (either cycle-weighted or notch-specific, as applicable) by the adjustment. Use the lower bound of the 80 percent confidence interval of the estimate of the mean as your estimated energy savings rate. We may cap your energy savings rate for this paragraph (h)(4) at 80 percent of the estimate of the mean. Calculate the emission adjustment factors as:

$$AF = 1.000 - (\text{energy savings rate})$$

(5) We may require you to collect and report data from locomotives we allow you to certify under this paragraph (h) and to recalculate the adjustment factor for future model years based on such data.

(6) Features that are considered to have not been commonly incorporated in locomotives before 2008 include but are not limited to those identified in this paragraph (h)(6).

(i) Electronically controlled pneumatic (ECP) brakes, computerized throttle management control, and advanced hybrid technology were not commonly incorporated in locomotives before 2008. Manufacturers may claim full credit for energy savings that result from applying these features to freshly manufactured and/or remanufactured locomotives.

(ii) Distributed power systems that use radio controls to optimize operation of locomotives in the middle and rear of a train were commonly incorporated in some but not all locomotives in 2008. Manufacturers may claim credit for incorporating these features into locomotives as follows:

(A) Manufacturers may claim prorated credit for incorporating distributed power systems in freshly manufactured locomotives. Multiply the energy saving rate by 0.50 when calculating the adjustment factor:

$$AF = 1.000 - (\text{energy savings rate}) \times (0.50)$$

(B) Manufacturers may claim full credit for retrofitting distributed power systems in remanufactured locomotives.

[73 FR 37197, June 30, 2008, as amended at 73 FR 59190, Oct. 8, 2008; 75 FR 22985, Apr. 30, 2010]

§ 1033.535 Adjusting emission levels to account for infrequently regenerating aftertreatment devices.

This section describes how to adjust emission results from locomotives using aftertreatment technology with infrequent regeneration events that occur during testing. See paragraph (e) of this section for how to adjust ramped modal testing. See paragraph (f) of this section for how to adjust discrete-mode testing. For this section, ''regeneration'' means an intended event during which emission levels change while the system restores aftertreatment performance. For example, hydrocarbon emissions may increase temporarily while oxidizing accumulated particulate matter in a trap. Also for this section, ''infrequent'' refers to regeneration events that are expected to occur on average less than once per sample period.

(a) *Developing adjustment factors.* Develop an upward adjustment factor and a downward adjustment factor for each pollutant based on measured emission data and observed regeneration frequency. Adjustment factors should generally apply to an entire engine family, but you may develop separate adjustment factors for different configurations within an engine family. If you use adjustment factors for certification, you must identify the frequency factor, F, from paragraph (b) of this section in your application for certification and use the adjustment factors in all testing for that engine family. You may use carryover or carryacross data to establish adjustment factors for an engine family, as described in §1033.235, consistent with good engineering judgment. All adjustment factors for regeneration are additive. Determine adjustment factors separately for different test segments as described in paragraphs (e) and (f) of this section. You may use either of the following different approaches for locomotives that use aftertreatment with infrequent regeneration events:

(1) You may disregard this section if you determine that regeneration does not significantly affect emission levels for an engine family (or configuration) or if it is not practical to identify when regeneration occurs. If you do not use adjustment factors under this section, your locomotives must meet emission standards for all testing, without regard to regeneration.

(2) You may ask us to approve an alternate methodology to account for regeneration events. We will generally limit approval to cases in which your locomotives use aftertreatment technology with extremely infrequent regeneration and you are unable to apply the provisions of this section.

(b) *Calculating average emission factors.* Calculate the average emission factor (EF_A) based on the following equation:

$$EF_A = (F)(EF_H) + (1\text{-}F)(EF_L)$$

Where:

F = the frequency of the regeneration event during normal in-use operation, expressed in terms of the fraction of equivalent tests

during which the regeneration occurs. You may determine F from in-use operating data or running replicate tests. For example, if you observe that the regeneration occurs 125 times during 1000 MW-hrs of operation, and your locomotive typically accumulates 1 MW-hr per test, F would be $(125) \div (1000) \times (1) = 0.125$.

EF_H = measured emissions from a test segment in which the regeneration occurs.

EF_L = measured emissions from a test segment in which the regeneration does not occur.

(c) *Applying adjustment factors.* Apply adjustment factors based on whether regeneration occurs during the test run. You must be able to identify regeneration in a way that is readily apparent during all testing.

(1) If regeneration does not occur during a test segment, add an upward adjustment factor to the measured emission rate. Determine the upward adjustment factor (UAF) using the following equation:

$$UAF = EF_A - EF_L$$

(2) If regeneration occurs or starts to occur during a test segment, subtract a downward adjustment factor from the measured emission rate. Determine the downward adjustment factor (DAF) using the following equation:

$$DAF = EF_H - EF_A$$

(d) *Sample calculation.* If EF_L is 0.10 g/bhp-hr, EF_H is 0.50 g/bhp-hr, and F is 0.10 (the regeneration occurs once for each ten tests), then:

EF_A = (0.10)(0.50 g/bhp-hr) + (1.00 − 0.10)(0.10 g/bhp-hr) = 0.14 g/bhp-hr.

UAF = 0.14 g/bhp-hr − 0.10 g/bhp-hr = 0.04 g/bhp-hr.

DAF = 0.50 g/bhp-hr − 0.14 g/bhp-hr = 0.36 g/bhp-hr

(e) *Ramped modal testing.* Develop separate adjustment factors for each test phase. If a regeneration has started but has not been completed when you reach the end of a test phase, use good engineering judgment to reduce your downward adjustments to be proportional to the emission impact that occurred in the test phases.

(f) *Discrete-mode testing.* Develop separate adjustment factors for each test mode. If a regeneration has started but has not been completed when you reach the end of the sampling time for a test mode extend the sampling period for that mode until the regeneration is completed.

Subpart G—Special Compliance Provisions

§ 1033.601 General compliance provisions.

Locomotive manufacturer/remanufacturers, as well as owners and operators of locomotives subject to the requirements of this part, and all other persons, must observe the provisions of this part, the requirements and prohibitions in 40 CFR part 1068, and the provisions of the Clean Air Act. The provisions of 40 CFR part 1068 apply for locomotives as specified in that part, except as otherwise specified in this section.

(a) *Meaning of terms.* When used in 40 CFR part 1068, apply meanings for specific terms as follows:

(1) ''Manufacturer'' means manufacturer and/or remanufacturer.

(2) ''Date of manufacture'' means date of original manufacture for freshly manufactured locomotives and the date on which a remanufacture is completed for remanufactured engines.

(b) *Engine rebuilding.* The provisions of 40 CFR 1068.120 do not apply when remanufacturing locomotives under a certificate of conformity issued under this part.

(c) *Exemptions.* (1) The exemption provisions of 40 CFR 1068.240 (i.e., exemptions for replacement engines) do not apply for domestic or imported locomotives. (Note: You may introduce into commerce freshly manufactured replacement engines under this part, provided the locomotives into which they are installed are covered by a certificate of conformity.)

(2) The exemption provisions of 40 CFR 1068.250 and 1068.255 (i.e., exemptions for hardship relief) do not apply for domestic or imported locomotives. See § 1033.620 for provisions related to hardship relief.

(3) The exemption provisions of 40 CFR 1068.261 (i.e., exemptions for delegated assembly) do not apply for domestic or imported locomotives, except as specified in § 1033.630.

(4) The provisions for importing engines and equipment under the identical configuration exemption of 40

CFR 1068.315(i) do not apply for locomotives.

(5) The provisions for importing engines and equipment under the ancient engine exemption of 40 CFR 1068.315(j) do not apply for locomotives.

(d) *SEAs, defect reporting, and recall.* The provisions of 40 CFR part 1068, subpart E (i.e., SEA provisions) do not apply for locomotives. Except as noted in this paragraph (d), the provisions of 40 CFR part 1068, subpart F, apply to certificate holders for locomotives as specified for manufacturers in that part.

(1) When there are multiple persons meeting the definition of manufacturer or remanufacturer, each person meeting the definition of manufacturer or remanufacturer must comply with the requirements of 40 CFR part 1068, subpart F, as needed so that the certificate holder can fulfill its obligations under those subparts.

(2) The defect investigation requirements of 40 CFR 1068.501(a)(5), (b)(1) and (b)(2) do not apply for locomotives. Instead, use good engineering judgment to investigate emission-related defects consistent with normal locomotive industry practice for investigating defects. You are not required to track parts shipments as indicators of possible defects.

(e) *Introduction into commerce.* The placement of a new locomotive or new locomotive engine back into service following remanufacturing is a violation of 40 CFR 1068.101(a)(1), unless it has a valid certificate of conformity for its model year and the required label.

[73 FR 37197, June 30, 2008, as amended at 73 FR 59190, Oct. 8, 2008; 75 FR 22986, Apr. 30, 2010]

§ 1033.610 Small railroad provisions.

In general, the provisions of this part apply for all locomotives, including those owned by Class II and Class III railroads. This section describes how these provisions apply for railroads meeting the definition of ''small railroad'' in § 1033.901. (NOTE: The term ''small railroad'' excludes all Class II railroads and some Class III railroads, such as those owned by large parent companies.)

(a) Locomotives become subject to the provisions of this part when they become ''new'' as defined in § 1033.901. Under that definition, a locomotive is ''new'' when first assembled, and generally becomes ''new'' again when remanufactured. As an exception to this general concept, locomotives that are owned and operated by railroads meeting the definition of ''small railroad'' in § 1033.901 do not become ''new'' when remanufactured, unless they were previously certified to EPA emission standards. Certificate holders may require written confirmation from the owner/operator that the locomotive qualifies as a locomotive that is owned and operated by a small railroad. Such written confirmation to a certificate holder is deemed to also be a submission to EPA and is thus subject to the reporting requirements of 40 CFR 1068.101.

(b) The provisions of subpart I of this part apply to all owners and operators of locomotives subject to this part 1033. However, the regulations of that subpart specify some provisions that apply only for Class I freight railroads, and others that apply differently to Class I freight railroads and other railroads.

(c) We may exempt new locomotives that are owned or operated by small railroads from the prohibition against remanufacturing a locomotive without a certificate of conformity as specified in this paragraph (c). This exemption is only available in cases where no certified remanufacturing system is available for the locomotive. For example, it is possible that no remanufacturer will certify a system for very old locomotive models that comprise a tiny fraction of the fleet and that are remanufactured infrequently. We will grant the exemption in all cases in which no remanufacturing system has been certified for the applicable engine family and model year. We may also grant an exemption where we determine that a certified system is unavailable. We may consider the issue of excessive costs in determining the availability of certified systems. If we grant this exemption for a previously certified locomotive, you are required to return the locomotive to its previously certified configuration. Send

your request for such exemptions to the Designated Compliance Officer.

(d) Non-Class I railroads that do not meet the definition of ''small railroad'' in § 1033.901 may ask that their remanufactured locomotives be excluded from the definition of ''new'' in § 1033.901 in cases where no certified remanufacturing system is available for the locomotive. We will grant the exemption in all cases in which no remanufacturing system has been certified for the applicable engine family and model year. If we grant this exemption for a previously certified locomotive, you are required to return the locomotive to its previously certified configuration. Send your request for such exemptions to the Designated Compliance Officer.

§ 1033.615 Voluntarily subjecting locomotives to the standards of this part.

The provisions of this section specify the cases in which an owner or manufacturer of a locomotive or similar piece of equipment can subject it to the standards and requirements of this part. Once the locomotive or equipment becomes subject to the locomotive standards and requirements of this part, it remains subject to the standards and requirements of this part for the remainder of its service life.

(a) *Equipment excluded from the definition of ''locomotive''.* (1) Manufacturers/remanufacturers of equipment that is excluded from the definition of ''locomotive'' because of its total power, but would otherwise meet the definition of locomotive may ask to have it considered to be a locomotive. To do this, submit an application for certification as specified in subpart C of this part, explaining why it should be considered to be a locomotive. If we approve your request, it will be deemed to be a locomotive for the remainder of its service life.

(2) In unusual circumstances, we may deem other equipment to be locomotives (at the request of the owner or manufacturer/remanufacturer) where such equipment does not conform completely to the definition of locomotive, but is functionally equivalent to a locomotive.

(b) *Locomotives excluded from the definition of ''new''.* Owners of remanufactured locomotives excluded from the definition of ''new'' in § 1033.901 under paragraph (2) of that definition may choose to upgrade their locomotives to subject their locomotives to the standards and requirements of this part by complying with the specifications of a certified remanufacturing system, including the labeling specifications of § 1033.135.

§ 1033.620 Hardship provisions for manufacturers and remanufacturers.

(a) If you qualify for the economic hardship provisions specified in 40 CFR 1068.245, we may approve a period of delayed compliance for up to one model year total.

(b) The provisions of this paragraph (b) are intended to address problems that could occur near the date on which more stringent emission standards become effective, such as the transition from the Tier 2 standards to the Tier 3 standards for line-haul locomotives on January 1, 2012.

(1) In appropriate extreme and unusual circumstances that are clearly outside the control of the manufacturer and could not have been avoided by the exercise of prudence, diligence, and due care, we may permit you, for a brief period, to introduce into commerce locomotives which do not comply with the applicable emission standards if all of the following conditions apply:

(i) You cannot reasonably manufacture the locomotives in such a manner that they would be able to comply with the applicable standards.

(ii) The manufacture of the locomotives was substantially completed prior to the applicability date of the standards from which you seek the relief. For example, you may not request relief for a locomotive that has been ordered, but for which you will not begin the assembly process prior to the applicability date of the standards. On the other hand, we would generally consider completion of the underframe weldment to be a substantial part of the manufacturing process.

(iii) Manufacture of the locomotives was previously scheduled to be completed at such a point in time that locomotives would have been included in the previous model year, such that they would have been subject to less stringent standards, and that such schedule was feasible under normal conditions.

(iv) You demonstrate that the locomotives comply with the less stringent standards that applied to the previous model year's production described in paragraph (b)(1)(iii) of this section, as prescribed by subpart C of this part (i.e., that the locomotives are identical to locomotives certified in the previous model year).

(v) You exercised prudent planning, were not able to avoid the violation, and have taken all reasonable steps to minimize the extent of the nonconformity.

(vi) We approve your request before you introduce the locomotives into commerce.

(2) You must notify us as soon as you become aware of the extreme or unusual circumstances.

(3)(i) Include locomotives for which we grant relief under this section in the engine family for which they were originally intended to be included.

(ii) Where the locomotives are to be included in an engine family that was certified to an FEL above the applicable standard, you must reserve credits to cover the locomotives covered by this allowance and include the required information for these locomotives in the end-of-year report required by subpart H of this part.

(c) In granting relief under this section, we may also set other conditions as appropriate, such as requiring payment of fees to negate an economic gain that such relief would otherwise provide.

§ 1033.625 Special certification provisions for non-locomotive-specific engines.

You may certify freshly manufactured or remanufactured locomotives using non-locomotive-specific engines (as defined in § 1033.901) using the normal certification procedures of this part. Locomotives certified in that way are generally treated the same as other locomotives, except where specified otherwise. The provisions of this section provide for design certification to the locomotive standards in this part for locomotives using engines included in engine families certified under 40 CFR part 1039 (or part 89) in limited circumstances.

(a) Remanufactured or freshly manufactured switch locomotives powered by non-locomotive-specific engines may be certified by design without the test data required by § 1033.235 if all of the following are true:

(1) Before being installed in the locomotive, the engines were covered by a certificate of conformity issued under 40 CFR Part 1039 (or part 89) that is effective for the calendar year in which the manufacture or remanufacture occurs. You may use engines certified during the previous years if they were subject to the same standards. You may not make any modifications to the engines unless we approve them.

(2) The engines were certified to standards that are numerically lower than the applicable locomotive standards of this part.

(3) More engines are reasonably projected to be sold and used under the certificate for non-locomotive use than for use in locomotives.

(4) The number of such locomotives certified under this section does not exceed 30 in any three-year period. We may waive this sales limit for locomotive models that have previously demonstrated compliance with the locomotive standards of § 1033.101 in-use.

(5) We approved the application as specified in paragraph (d) of this section.

(b) To certify your locomotives by design under this section, submit your application as specified in § 1033.205, with the following exceptions:

(1) Include the following instead of the locomotive test data otherwise required by § 1033.205:

(i) A description of the engines to be used, including the name of the engine manufacturer and engine family identifier for the engines.

(ii) A brief engineering analysis describing how the engine's emission controls will function when installed in the locomotive throughout the locomotive's useful life.

(iii) The emission data submitted under 40 CFR part 1039 (or part 89).

(2) You may separately submit some of the information required by § 1033.205, consistent with the provisions of § 1033.1(d). For example, this may be an appropriate way to submit detailed information about proprietary engine software. Note that this allowance to separately submit some of the information required by § 1033.205 is also available for applications not submitted under this section.

(c) Locomotives certified under this section are subject to all the requirements of this part except as specified in paragraph (b) of this section. The engines used in such locomotives are not considered to be included in the otherwise applicable engines family of 40 CFR part 1039 (or part 89).

(d) We will approve or deny the application as specified in subpart C of this part. For example, we will deny your application for certification by design under this section in any case where we have evidence that your locomotives will not conform to the requirements of this part throughout their useful lives.

[73 FR 37197, June 30, 2008, as amended at 75 FR 22986, Apr. 30, 2010]

§ 1033.630 Staged-assembly and delegated assembly exemptions.

(a) *Staged assembly*. You may ask us to provide a temporary exemption to allow you to complete production of your engines and locomotives at different facilities, as long as you maintain control of the engines until they are in their certified configuration. We may require you to take specific steps to ensure that such locomotives are in their certified configuration before reaching the ultimate purchaser. You may request an exemption under this paragraph (a) in your application for certification, or in a separate submission. If you include your request in your application, your exemption is approved when we grant your certificate. Note that no exemption is needed to ship an engine that has been assembled in its certified configuration, is properly labeled, and will not require an aftertreatment device to be attached when installed in the locomotive.

(b) *Delegated assembly*. This paragraph (b) applies where the engine manufacturer/remanufacturer does not complete assembly of the locomotives and the engine is shipped after being manufactured or remanufactured (partially or completely). The provisions of this paragraph (b) apply differently depending on who holds the certificate of conformity and the state of the engine when it is shipped. You may request an exemption under this paragraph (b) in your application for certification, or in a separate submission. If you include your request in your application, your exemption is approved when we grant your certificate. A manufacturer/remanufacturer may request an exemption under 40 CFR 1068.261 instead of under this section.

(1) In cases where an engine has been assembled in its certified configuration, properly labeled, and will not require an aftertreatment device to be attached when installed in the locomotive, no exemption is needed to ship the engine. You do not need an exemption to ship engines without specific components if they are not emission-related components identified in Appendix I of 40 CFR part 1068.

(2) In cases where an engine has been properly labeled by the certificate holder and assembled in its certified configuration except that it does not yet have a required aftertreatment device, an exemption is required to ship the engine. You may ask for this exemption if you do all of the following:

(i) You note on the Engine Emission Control Information label that the locomotive must include the aftertreatment device to be covered by the certificate.

(ii) You make clear in your emission-related installation instructions that installation of the aftertreatment device is required for the locomotive to be covered by the certificate.

(3) In cases where an engine will be shipped to the certificate holder in an uncertified configuration, an exemption is required to ship the engine. You may ask for this exemption under 40 CFR 1068.262.

(c) *Other exemptions*. In unusual circumstances, you may ask us to provide an exemption for an assembly process that is not covered by the provisions of

paragraphs (a) and (b) of this section. We will make the exemption conditional based on you complying with requirements that we determine are necessary to ensure that the locomotives are assembled in their certified configuration before being placed (back) into service.

[73 FR 37197, June 30, 2008, as amended at 73 FR 59190, Oct. 8, 2008]

§ 1033.640 Provisions for repowered and refurbished locomotives.

(a) The provisions of this section apply for locomotives that are produced from an existing locomotive so that the new locomotive contains both previously used parts and parts that have never been used before.

(1) Repowered locomotives are used locomotives in which a freshly manufactured propulsion engine is installed. As described in this section, a repowered locomotive is deemed to be either remanufactured or freshly manufactured, depending on the total amount of unused parts on the locomotive. It may also be deemed to be a refurbished locomotive.

(2) Refurbished locomotives are locomotives that contain more unused parts than previously used parts. As described in this section, a locomotive containing more unused parts than previously used parts may be deemed to be either remanufactured or freshly manufactured, depending on the total amount of unused parts on the locomotive. Note that § 1033.901 defines refurbishment of a pre-1973 locomotive to be an upgrade of the locomotive.

(b) A single existing locomotive cannot be divided into parts and combined with new parts to create more than one remanufactured locomotive. However, any number of locomotives can be divided into parts and combined with new parts to create more than one remanufactured locomotive, provided the number of locomotives created (remanufactured and freshly manufactured) does not exceed the number of locomotives that were disassembled.

(c) You may determine the relative amount of previously used parts consistent with the specifications of the Federal Railroad Administration. Otherwise, determine the relative amount of previously used parts as follows:

(1) Identify the parts in the fully assembled locomotive that have been previously used and those that have never been used before.

(2) Weight the unused parts and previously used parts by the dollar value of the parts. For example, a single part valued at $1200 would count the same as six parts valued at $200 each. Group parts by system where possible (such as counting the engine as one part) if either all the parts in that system are used or all the parts in that system are unused. Calculate the used part values using dollar values from the same year as the new parts.

(3) Sum the values of the unused parts. Also sum the values of the previously used parts. The relative fraction of used parts is the total value of previously used parts divided by the combined value of the unused parts and previously used parts.

(c) If the weighted fraction of the locomotive that is comprised of previously used parts is greater than or equal to 25 percent, then the locomotive is considered to be a remanufactured locomotive and retains its original date of manufacture. Note, however, that if the weighted fraction of the locomotive that is comprised of previously used parts is less than 50 percent, then the locomotive is also considered to be a refurbished locomotive.

(d) If the weighted fraction of the locomotive that is comprised of previously used parts is less than 25 percent, then the locomotive is deemed to be a freshly manufactured locomotive and the date of original manufacture is the most recent date on which the locomotive was assembled using less than 25 percent previously used parts. For example:

(1) If you produce a new locomotive that includes a used frame, but all other parts are unused, then the locomotive would likely be considered to be a freshly manufactured locomotive because the value of the frame would likely be less than 25 percent of the total value of the locomotive. Its date of original manufacture would be the date on which you complete its assembly.

(2) If you produce a new locomotive by replacing the engine in a 1990 locomotive with a freshly manufactured engine, but all other parts are used, then the locomotive would likely be considered to be a remanufactured locomotive and its date of original manufacture is the date on which assembly was completed in 1990. (NOTE: such a locomotive would also be considered to be a repowered locomotive.)

(e) Locomotives containing used parts that are deemed to be freshly manufactured locomotives are subject to the same provisions as all other freshly manufactured locomotives. Other refurbished locomotives are subject to the same provisions as other remanufactured locomotives, with the following exceptions:

(1) *Switch locomotives.* (i) Prior to January 1, 2015, remanufactured Tier 0 switch locomotives that are deemed to be refurbished are subject to the Tier 0 line-haul cycle and switch cycle standards. Note that this differs from the requirements applicable to other Tier 0 switch locomotives, which are not subject to the Tier 0 line-haul cycle standards.

(ii) Beginning January 1, 2015, remanufactured Tier 3 and earlier switch locomotives that are deemed to be refurbished are subject to the Tier 3 switch standards.

(2) *Line-haul locomotives.* Remanufactured line-haul locomotives that are deemed to be refurbished are subject to the same standards as freshly manufactured line-haul locomotives, except that line-haul locomotives with rated power less than 3000 hp that are refurbished before January 1, 2015 are subject to the same standards as refurbished switch locomotives under paragraph (e)(1)(i) of this section. However, line-haul locomotives less than 3000 hp may not generate emission credits relative to the standards specified in paragraph (e)(1)(i) of this section.

(3) *Labels for switch and line-haul locomotives.* Remanufacturers that refurbish a locomotive must add a secondary locomotive label that includes the following:

(i) The label heading: ''REFURBISHED LOCOMOTIVE EMISSION CONTROL INFORMATION.''

(ii) The statement identifying when the locomotive was refurbished and what standards it is subject to, as follows: ''THIS LOCOMOTIVE WAS REFURBISHED IN [year of refurbishment] AND MUST COMPLY WITH THE TIER [applicable standard level] EACH TIME THAT IT IS REMANUFACTURED, EXCEPT AS ALLOWED BY 40 CFR 1033.750.''.

[73 FR 37197, June 30, 2008, as amended at 73 FR 59190, Oct. 8, 2008; 74 FR 8425, Feb. 24, 2009]

EDITORIAL NOTE: At 73 FR 37197, June 30, 2008, § 1033.640 was added. This amendment included two paragraphs (c) in the original text.

§ 1033.645 Non-OEM component certification program.

This section describes a voluntary program that allows you to get EPA approval of components you manufacture for use during remanufacturing.

(a) *Applicability.* This section applies only for components that are commonly replaced during remanufacturing. It does not apply for other types of components that are replaced during a locomotive's useful life, but not typically replaced during remanufacture. Certified components may be used for remanufacturing or other maintenance.

(1) The following components are eligible for approval under this section:

(i) Cylinder liners.

(ii) Pistons.

(iii) Piston rings.

(iv) Heads

(v) Fuel injectors.

(vi) Turbochargers

(vii) Aftercoolers and intercoolers.

(2) Catalysts and electronic controls are not eligible for approval under this section.

(3) We may determine that other types of components can be certified under this section, consistent with good engineering judgment.

(b) *Approval.* To obtain approval, submit your request to the Designated Compliance Officer.

(1) Include all of the following in your request:

(i) A description of the component(s) for which you are requesting approval.

(ii) A list of all engine/locomotive models and engine families for which

your component would be used. You may exclude models that are not subject to our standards or will otherwise not be remanufactured under a certificate of conformity.

(iii) A copy of the maintenance instructions for engines using your component. You may reference the other certificate holder's maintenance instructions in your instructions. For example, your instructions may specify to follow the other certificate holder's instructions in general, but list one or more exceptions to address the specific maintenance needs of your component.

(iv) An engineering analysis (including test data in some cases) demonstrating to us that your component will not cause emissions to increase. The analysis must address both low-hour and end-of-useful life emissions. The amount of information required for this analysis is less than is required to obtain a certificate of conformity under subpart C of this part and will vary depending on the type of component being certified.

(v) The following statement signed by an authorized representative of your company: We submit this request under 40 CFR 1033.645. All the information in this report is true and accurate to the best of my knowledge. I know of the penalties for violating the Clean Air Act and the regulations. (Authorized Company Representative)

(2) If we determine that there is reasonable technical basis to believe that your component is sufficiently equivalent that it will not increase emissions, we will approve your request and you will be a certificate holder for your components with respect to actual emissions performance for all locomotives that use those components (in accordance with this section).

(c) *Liability*. Being a certificate holder under this section means that if in-use testing indicates that a certified locomotive using one or more of your approved components does not comply with an applicable emission standard, we will presume that you and other certificate holders are liable for the noncompliance. However, we will not hold you liable in cases where you convince us that your components did not cause the noncompliance. Conversely, we will not hold other certificate holders liable for noncompliance caused solely by your components. You are also subject to the warranty and defect reporting requirements of this part for your certified components. Other requirements of this part apply as specified in § 1033.1.

(d) *In-use testing*. Locomotives containing your components must be tested according to the provisions of this paragraph (d).

(1) Except as specified in paragraph (d)(5) of this section, you must test at least one locomotive if 250 locomotives use your component under this section. You must test one additional locomotive for the next additional 500 locomotives that use your component under this section. After that, we may require you to test one additional locomotive for each additional 1000 locomotives that use your component under this section. These numbers apply across model years. For example, if your component is used in 125 remanufactures per year under this section, you must test one of the first 250 locomotives, one of the next 500 locomotives, and up to one every eight years after that. Do not count locomotives that use your components but are not covered by this section.

(2) Except for the first locomotive you test for a specific component under this section, locomotives tested under this paragraph (d) must be past the half-way point of the useful life in terms of MW-hrs. For the first locomotive you test, select a locomotive that has operated between 25 and 50 percent of its useful life.

(3) Unless we approve a different schedule, you must complete testing and report the results to us within 180 days of the earliest point at which you could complete the testing based on the hours of operation accumulated by the locomotives. For example, if 250 or more locomotives use your part under this section, and the first of these to reach 25 percent of its useful life does so on March 1st of a given year, you must complete testing of one of the first 250 locomotives and report to us by August 28th of that year.

(4) Unless we approve different test procedures, you must test the locomotive according to the procedures specified in subpart F of this part.

(5) If any locomotives fail to meet all standards, we may require you to test one additional locomotive for each locomotive that fails. You may choose to accept that your part is causing an emission problem rather than continuing testing. You may also test additional locomotives at any time. We will consider failure rates, average emission levels and the existence of any defects among other factors in determining whether to pursue remedial action. We may order a recall pursuant to 40 CFR part 1068 before you complete testing additional locomotives.

(6) You may ask us to allow you to rely on testing performed by others instead of requiring you to perform testing. For example, if a railroad tests a locomotive with your component as part of its testing under § 1033.810, you may ask to submit those test data as fulfillment of your test obligations under this paragraph (d). If a given test locomotive uses different components certified under this section that were manufactured by different manufacturers (such as rings from one manufacturer and cylinder liners from another manufacturer), a single test of it may be counted towards both manufacturers' test obligations. In unusual circumstances, you may also ask us to grant you hardship relief from the testing requirements of this paragraph (d). In determining whether to grant you relief, we will consider all relevant factors including the extent of the financial hardship to your company and whether the test data are available from other sources, such as testing performed by a railroad.

(e) Components certified under this section may be used when remanufacturing Category 2 engines under 40 CFR part 1042.

[73 FR 37197, June 30, 2008, as amended at 73 FR 59190, Oct. 8, 2008; 74 FR 8425, Feb. 24, 2009]

§ 1033.650 Incidental use exemption for Canadian and Mexican locomotives.

You may ask us to exempt from the requirements and prohibitions of this part locomotives that are operated primarily outside of the United States and that enter the United States temporarily from Canada or Mexico. We will approve this exemption only where we determine that the locomotive's operation within the United States will not be extensive and will be incidental to its primary operation. For example, we would generally exempt locomotives that will not operate more than 25 miles from the border and will operate in the United States less than 5 percent of their operating time. For existing operations, you must request this exemption before January 1, 2011. In your request, identify the locomotives for which you are requesting an exemption, and describe their projected use in the United States. We may grant the exemption broadly or limit the exemption to specific locomotives and/or specific geographic areas. However, we will typically approve exemptions for specific rail facilities rather than specific locomotives. In unusual circumstances, such as cases in which new rail facilities are created, we may approve requests submitted after January 1, 2011.

§ 1033.652 Special provisions for exported locomotives.

(a) *Uncertified locomotives.* Locomotives covered by an export exemption under 40 CFR 1068.230 may be introduced into U.S. commerce prior to being exported, but may not be used in any revenue generating service in the United States. Locomotives covered by this paragraph (a) may not include any EPA emission control information label. Such locomotives may include emission control information labels for the country to which they are being exported.

(b) *Locomotives covered by export-only certificates.* Locomotives may be certified for export under 40 CFR 1068.230. Such locomotives may be introduced into U.S. commerce prior to being exported, but may not be used in any revenue generating service in the United States.

(c) *Locomotives included in a certified engine family.* Except as specified in paragraph (d) of this section, locomotives included in a certified engine family may be exported without restriction. Note that § 1033.705 requires that exported locomotives be excluded from emission credit calculations in certain circumstances.

(d) *Locomotives certified to FELs above the standards.* The provisions of this paragraph (d) apply for locomotive configurations included in engine families certified to one or more FELs above any otherwise applicable standard. Individual locomotives that will be exported may be excluded from an engine family if they are unlabeled. For locomotives that were labeled during production, you may remove the emission control information labels prior to export. All unlabeled locomotives that will be exported are subject to the provisions of paragraph (a) of this section. Locomotives that are of a configuration included in an engine family certified to one of more FELs above any otherwise applicable standard that include an EPA emission control information label when exported are considered to be part of the engine family and must be included in credit calculations under § 1033.705. Note that this requirement does not apply for locomotives that do not have an EPA emission control information label, even if they have other labels (such as an export-only label).

[75 FR 22986, Apr. 30, 2010]

§ 1033.655 Special provisions for certain Tier 0/Tier 1 locomotives.

(a) The provisions of this section apply only for the following locomotives (and locomotives in the same engine families as these locomotives):

(1) Locomotives listed in Table 1 of this section originally manufactured 1986–1994 by General Electric Company that have never been equipped with separate loop aftercooling. The section also applies for the equivalent passenger locomotives.

TABLE 1 TO § 1033.655

8–40C	P32ACDM
8–40B	P42DC
8–32B	8–40BPH
8–40CW	P40DC
8–40BW	8–32BWH
8–40CM	C39–8
8–41CW	B39–8E
8–44CW	

(2) SD70MAC and SD70IAC locomotives originally manufactured 1996–2000 by EMD.

(b) Any certifying remanufacturer may request relief for the locomotives covered by this section.

(c) You may ask us to allow these locomotives to exceed otherwise applicable line-haul cycle NO_X standard for high ambient temperatures and/or altitude because of limitations of the cooling system. However, the NO_X emissions may exceed the otherwise applicable standard only to the extent necessary. Relief is limited to the following conditions:

(1) For General Electric locomotives, you may ask for relief for ambient temperatures above 23 °C and/or barometric pressure below 97.5 kPa (28.8 in. Hg). NO_X emissions may not exceed 9.5 g/bhp-hr over the line-haul cycle for any temperatures up to 105 °F and any altitude up to 7000 feet above sea level.

(2) For EMD locomotives, you may ask for relief for ambient temperatures above 30 °C and/or barometric pressure below 97.5 kPa (28.8 in. Hg). NO_X emissions may not exceed 8.0 g/bhp-hr over the line-haul cycle for any temperatures up to 105 °F and any altitude up to 7000 feet above sea level.

(d) All other standards and requirements in this part apply as specified.

(e) To request this relief, submit to the Designated Compliance Officer along with your application for certification an engineering analysis showing how your emission controls operate for the following conditions:

(1) Temperatures 23–40 °C at any altitude up to 7000 feet above sea level.

(2) Altitudes 1000–7000 feet above sea level for any temperature from 15–40 °C.

Subpart H—Averaging, Banking, and Trading for Certification

§ 1033.701 General provisions.

(a) You may average, bank, and trade (ABT) emission credits for purposes of certification as described in this subpart to show compliance with the standards of this part. Participation in this program is voluntary.

(b) Section 1033.740 restricts the use of emission credits to certain averaging sets.

(c) The definitions of Subpart J of this part apply to this subpart. The following definitions also apply:

(1) *Actual emission credits* means emission credits you have generated that we have verified by reviewing your final report.

(2) *Applicable emission standard* means an emission standard that is specified in subpart B of this part. Note that for other subparts, ''applicable emission standard'' is defined to also include FELs.

(3) *Averaging set* means a set of locomotives in which emission credits may be exchanged only with other locomotives in the same averaging set.

(4) *Broker* means any entity that facilitates a trade of emission credits between a buyer and seller.

(5) *Buyer* means the entity that receives emission credits as a result of a trade.

(6) *Reserved emission credits* means emission credits you have generated that we have not yet verified by reviewing your final report.

(7) *Seller* means the entity that provides emission credits during a trade.

(8) *Trade* means to exchange emission credits, either as a buyer or seller.

(9) *Transfer* means to convey control of credits generated for an individual locomotive to the purchaser, owner, or operator of the locomotive at the time of manufacture or remanufacture; or to convey control of previously generated credits from the purchaser, owner, or operator of an individual locomotive to the manufacturer/remanufacturer at the time of manufacture/remanufacture.

(d) You may not use emission credits generated under this subpart to offset any emissions that exceed an FEL or standard. This applies for all testing, including certification testing, in-use testing, selective enforcement audits, and other production-line testing. However, if emissions from a locomotive exceed an FEL or standard (for example, during a selective enforcement audit), you may use emission credits to recertify the engine family with a higher FEL that applies only to future production.

(e) Engine families that use emission credits for one or more pollutants may not generate positive emission credits for another pollutant.

(f) Emission credits may be used in the model year they are generated or in future model years. Emission credits may not be used for past model years.

(g) You may increase or decrease an FEL during the model year by amending your application for certification under §1033.225. The new FEL may apply only to locomotives you have not already introduced into commerce. Each locomotive's emission control information label must include the applicable FELs. You must conduct production line testing to verify that the emission levels are achieved.

(h) Credits may be generated by any certifying manufacturer/remanufacturer and may be held by any of the following entities:

(1) Locomotive or engine manufacturers.

(2) Locomotive or engine remanufacturers.

(3) Locomotive owners.

(4) Locomotive operators.

(5) Other entities after notification to EPA.

(i) All locomotives that are certified to an FEL that is different from the emission standard that would otherwise apply to the locomotives are required to comply with that FEL for the remainder of their service lives, except as allowed by §1033.750.

(1) Manufacturers must notify the purchaser of any locomotive that is certified to an FEL that is different from the emission standard that would otherwise apply that the locomotive is required to comply with that FEL for the remainder of its service life.

(2) Remanufacturers must notify the owner of any locomotive or locomotive engine that is certified to an FEL that is different from the emission standard that would otherwise apply that the locomotive (or the locomotive in which the engine is used) is required to comply with that FEL for the remainder of its service life.

(j) The FEL to which the locomotive is certified must be included on the locomotive label required in §1033.135. This label must include the notification specified in paragraph (i) of this section.

§ 1033.705 Calculating emission credits.

The provisions of this section apply separately for calculating emission credits for NO_X or PM.

(a) Calculate positive emission credits for an engine family that has an FEL below the otherwise applicable emission standard. Calculate negative emission credits for an engine family that has an FEL above the otherwise applicable emission standard. Do not round until the end of year report.

(b) For each participating engine family, calculate positive or negative emission credits relative to the otherwise applicable emission standard. For the end of year report, round the sum of emission credits to the nearest one hundredth of a megagram (0.01 Mg). Round your end of year emission credit balance to the nearest megagram (Mg). Use consistent units throughout the calculation. When useful life is expressed in terms of megawatt-hrs, calculate credits for each engine family from the following equation:

$$\text{Emission credits} = (\text{Std} - \text{FEL}) \times (1.341) \times (\text{UL}) \times (\text{Production}) \times (F_p) \times (10^{-3}\ \text{kW-Mg/MW-g}).$$

Where:

Std = the applicable NO_X or PM emission standard in g/bhp-hr (except that Std = previous FEL in g/bhp-hr for locomotives that were certified under this part to an FEL other than the standard during the previous useful life).

FEL = the family emission limit for the engine family in g/bhp-hr.

UL = the sales-weighted average useful life in megawatt-hours (or the subset of the engine family for which credits are being calculated), as specified in the application for certification.

Production = the number of locomotives participating in the averaging, banking, and trading program within the given engine family during the calendar year (or the number of locomotives in the subset of the engine family for which credits are being calculated). Quarterly production projections are used for initial certification. Actual applicable production/sales volumes are used for end-of-year compliance determination.

F_p = the proration factor as determined in paragraph (d) of this section.

(c) When useful life is expressed in terms of miles, calculate the useful life in terms of megawatt-hours (UL) by dividing the useful life in miles by 100,000, and multiplying by the sales-weighted average rated power of the engine family. For example, if your useful life is 800,000 miles for a family with an average rated power of 3,500 hp, then your equivalent MW-hr useful life would be 28,000 MW-hrs. Credits are calculated using this UL value in the equations of paragraph (b) of this section.

(d) The proration factor is an estimate of the fraction of a locomotive's service life that remains as a function of age. The proration factor is 1.00 for freshly manufactured locomotives.

(1) The locomotive's age is the length of time in years from the date of original manufacture to the date at which the remanufacture (for which credits are being calculated) is completed, rounded to the next higher year.

(2) The proration factors for line-haul locomotives ages 1 through 20 are specified in Table 1 to this section. For line-haul locomotives more than 20 years old, use the proration factor for 20 year old locomotives. The proration factors for switch locomotives ages 1 through 40 are specified in Table 2 to this section. For switch locomotives more than 40 years old, use the proration factor for 40 year old locomotives.

(3) For repower engines, the proration factor is based on the age of the locomotive chassis, not the age of the engine, except for remanufactured locomotives that qualify as refurbished. The minimum proration factor for remanufactured locomotives that meet the definition of refurbished but not freshly manufactured is 0.60. (NOTE: The proration factor is 1.00 for all locomotives that meet the definition of freshly manufactured.)

TABLE 1 TO § 1033.705—PRORATION FACTORS FOR LINE-HAUL LOCOMOTIVES

Locomotive age (years)	Proration factor (F_p)
1	0.96
2	0.92
3	0.88
4	0.84
5	0.81
6	0.77
7	0.73
8	0.69
9	0.65
10	0.61
11	0.57
12	0.54

TABLE 1 TO § 1033.705—PRORATION FACTORS FOR LINE-HAUL LOCOMOTIVES—Continued

Locomotive age (years)	Proration factor (F_p)
13	0.50
14	0.47
15	0.43
16	0.40
17	0.36
18	0.33
19	0.30
20	0.27

TABLE 2 TO § 1033.705—PRORATION FACTORS FOR SWITCH LOCOMOTIVES

Locomotive age (years)	Proration factor (F_p)
1	0.98
2	0.96
3	0.94
4	0.92
5	0.90
6	0.88
7	0.86
8	0.84
9	0.82
10	0.80
11	0.78
12	0.76
13	0.74
14	0.72
15	0.70
16	0.68
17	0.66
18	0.64
19	0.62
20	0.60
21	0.58
22	0.56
23	0.54
24	0.52
25	0.50
26	0.48
27	0.46
28	0.44
29	0.42
30	0.40
31	0.38
32	0.36
33	0.34
34	0.32
35	0.30
36	0.28
37	0.26
38	0.24
39	0.22
40	0.20

(e) In your application for certification, base your showing of compliance on projected production volumes for locomotives that will be placed into service in the United States. As described in § 1033.730, compliance with the requirements of this subpart is determined at the end of the model year based on actual production volumes for locomotives that will be placed into service in the United States. Do not include any of the following locomotives to calculate emission credits:

(1) Locomotives permanently exempted under subpart G of this part or under 40 CFR part 1068.

(2) Exported locomotives. You may ask to include locomotives sold to Mexican or Canadian railroads if they will likely operate within the United States and you include all such locomotives (both credit using and credit generating locomotives).

(3) Locomotives not subject to the requirements of this part, such as those excluded under § 1033.5.

(4) Any other locomotives, where we indicate elsewhere in this part 1033 that they are not to be included in the calculations of this subpart.

[73 FR 37197, June 30, 2008, as amended at 75 FR 22987, Apr. 30, 2010]

§ 1033.710 Averaging emission credits.

(a) Averaging is the exchange of emission credits among your engine families. You may average emission credits only as allowed by § 1033.740.

(b) You may certify one or more engine families to an FEL above the applicable emission standard, subject to the FEL caps and other provisions in subpart B of this part, if you show in your application for certification that your projected balance of all emission-credit transactions in that model year is greater than or equal to zero.

(c) If you certify an engine family to an FEL that exceeds the otherwise applicable emission standard, you must obtain enough emission credits to offset the engine family's deficit by the due date for the final report required in § 1033.730. The emission credits used to address the deficit may come from your other engine families that generate emission credits in the same model year, from emission credits you have banked, or from emission credits you obtain through trading or by transfer.

§ 1033.715 Banking emission credits.

(a) Banking is the retention of emission credits by the manufacturer/remanufacturer generating the emission credits (or owner/operator, in the case of transferred credits) for use in future model years for averaging, trading, or

transferring. You may use banked emission credits only as allowed by § 1033.740.

(b) You may designate any emission credits you plan to bank in the reports you submit under § 1033.730 as reserved credits. During the model year and before the due date for the final report, you may designate your reserved emission credits for averaging, trading, or transferring.

(c) Reserved credits become actual emission credits when you submit your final report. However, we may revoke these emission credits if we are unable to verify them after reviewing your reports or auditing your records.

[75 FR 22987, Apr. 30, 2010]

§ 1033.720 Trading emission credits.

(a) Trading is the exchange of emission credits between certificate holders. You may use traded emission credits for averaging, banking, or further trading transactions. Traded emission credits may be used only as allowed by § 1033.740.

(b) You may trade actual emission credits as described in this subpart. You may also trade reserved emission credits, but we may revoke these emission credits based on our review of your records or reports or those of the company with which you traded emission credits.

(c) If a negative emission credit balance results from a transaction, both the buyer and seller are liable, except in cases we deem to involve fraud. See § 1033.255(e) for cases involving fraud. We may void the certificates of all engine families participating in a trade that results in a manufacturer/remanufacturer having a negative balance of emission credits. See § 1033.745.

§ 1033.722 Transferring emission credits.

(a) Credit transfer is the conveying of control over credits, either:

(1) From a certifying manufacturer/remanufacturer to an owner/operator.

(2) From an owner/operator to a certifying manufacturer/remanufacturer.

(b) Transferred credits can be:

(1) Used by a certifying manufacturer/remanufacturer in averaging.

(2) Transferred again within the model year.

(3) Reserved for later banking. Transferred credits may not be traded unless they have been previously banked.

(c) Owners/operators participating in credit transfers must submit the reports specified in § 1033.730.

§ 1033.725 Requirements for your application for certification.

(a) You must declare in your application for certification your intent to use the provisions of this subpart for each engine family that will be certified using the ABT program. You must also declare the FELs you select for the engine family for each pollutant for which you are using the ABT program. Your FELs must comply with the specifications of subpart B of this part, including the FEL caps. FELs must be expressed to the same number of decimal places as the applicable emission standards.

(b) Include the following in your application for certification:

(1) A statement that, to the best of your belief, you will not have a negative balance of emission credits for any averaging set when all emission credits are calculated at the end of the year.

(2) Detailed calculations of projected emission credits (positive or negative) based on projected production volumes. We may require you to include similar calculations from your other engine families to demonstrate that you will be able to avoid a negative credit balance for the model year. If you project negative emission credits for a family, state the source of positive emission credits you expect to use to offset the negative emission credits.

[73 FR 37197, June 30, 2008, as amended at 75 FR 22987, Apr. 30, 2010]

§ 1033.730 ABT reports.

(a) If any of your engine families are certified using the ABT provisions of this subpart, you must send an end-of-year report within 90 days after the end of the model year and a final report within 270 days after the end of the model year. We may waive the requirement to send the end-of year report, as long as you send the final report on time.

(b) Your end-of-year and final reports must include the following information

for each engine family participating in the ABT program:

(1) Engine family designation.

(2) The emission standards that would otherwise apply to the engine family.

(3) The FEL for each pollutant. If you change the FEL after the start of production, identify the date that you started using the new FEL and/or give the engine identification number for the first engine covered by the new FEL. In this case, identify each applicable FEL and calculate the positive or negative emission credits as specified in § 1033.225.

(4) The projected and actual production volumes for the model year that will be placed into service in the United States as described in § 1033.705. If you changed an FEL during the model year, identify the actual production volume associated with each FEL.

(5) Rated power for each locomotive configuration, and the average locomotive power weighted by U.S.-directed production volumes for the engine family.

(6) Useful life.

(7) Calculated positive or negative emission credits for the whole engine family. Identify any emission credits that you traded or transferred, as described in paragraph (d)(1) or (e) of this section.

(c) Your end-of-year and final reports must include the following additional information:

(1) Show that your net balance of emission credits from all your engine families in each averaging set in the applicable model year is not negative.

(2) State whether you will retain any emission credits for banking.

(3) State that the report's contents are accurate.

(d) If you trade emission credits, you must send us a report within 90 days after the transaction, as follows:

(1) As the seller, you must include the following information in your report:

(i) The corporate names of the buyer and any brokers.

(ii) A copy of any contracts related to the trade.

(iii) The engine families that generated emission credits for the trade, including the number of emission credits from each family.

(2) As the buyer, you must include the following information in your report:

(i) The corporate names of the seller and any brokers.

(ii) A copy of any contracts related to the trade.

(iii) How you intend to use the emission credits, including the number of emission credits you intend to apply to each engine family (if known).

(e) If you transfer emission credits, you must send us a report within 90 days after the first transfer to an owner/operator, as follows:

(1) Include the following information:

(i) The corporate names of the owner/operator receiving the credits.

(ii) A copy of any contracts related to the trade.

(iii) The serial numbers and engine families for the locomotive that generated the transferred emission credits and the number of emission credits from each family.

(2) The requirements of this paragraph (e) apply separately for each owner/operator.

(3) We may require you to submit additional 90-day reports under this paragraph (e).

(f) Send your reports electronically to the Designated Compliance Officer using an approved information format. If you want to use a different format, send us a written request with justification for a waiver.

(g) Correct errors in your end-of-year report or final report as follows:

(1) You may correct any errors in your end-of-year report when you prepare the final report, as long as you send us the final report by the time it is due.

(2) If you or we determine within 270 days after the end of the model year that errors mistakenly decreased your balance of emission credits, you may correct the errors and recalculate the balance of emission credits. You may not make these corrections for errors that are determined more than 270 days after the end of the model year. If you report a negative balance of emission credits, we may disallow corrections under this paragraph (g)(2).

(3) If you or we determine anytime that errors mistakenly increased your balance of emission credits, you must correct the errors and recalculate the balance of emission credits.

(h) We may modify these requirements for owners/operators required to submit reports because of their involvement in credit transferring.

[73 FR 37197, June 30, 2008, as amended at 75 FR 22987, Apr. 30, 2010]

§ 1033.735 Required records.

(a) You must organize and maintain your records as described in this section. We may review your records at any time.

(b) Keep the records required by this section for at least eight years after the due date for the end-of-year report. You may not use emission credits for any engines if you do not keep all the records required under this section. You must therefore keep these records to continue to bank valid credits. Store these records in any format and on any media, as long as you can promptly send us organized, written records in English if we ask for them. You must keep these records readily available. We may review them at any time.

(c) Keep a copy of the reports we require in § 1033.730.

(d) Keep records of the engine identification number for each locomotive you produce that generates or uses emission credits under the ABT program. If you change the FEL after the start of production, identify the date you started using each FEL and the range of engine identification numbers associated with each FEL. You must also be able to identify the purchaser and destination for each engine you produce.

(e) We may require you to keep additional records or to send us relevant information not required by this section in accordance with the Clean Air Act.

[73 FR 37197, June 30, 2008, as amended at 75 FR 22987, Apr. 30, 2010]

§ 1033.740 Credit restrictions.

Use of emission credits generated under this part 1033 or 40 CFR part 92 is restricted depending on the standards against which they were generated.

(a) *Credits from 40 CFR part 92.* NO_X and PM credits generated under 40 CFR part 92 may be used under this part in the same manner as NO_X and PM credits generated under this part.

(b) *General cycle restriction.* Locomotives subject to both switch cycle standards and line-haul cycle standards (such as Tier 2 locomotives) may generate both switch and line-haul credits. Except as specified in paragraph (c) of this section, such credits may only be used to show compliance with standards for the same cycle for which they were generated. For example, a Tier 2 locomotive that is certified to a switch cycle NO_X FEL below the applicable switch cycle standard and a line-haul cycle NO_X FEL below the applicable line-haul cycle standard may generate switch cycle NO_X credits for use in complying with switch cycle NO_X standards and a line-haul cycle NO_X credits for use in complying with line-haul cycle NO_X standards.

(c) *Single cycle locomotives.* As specified in § 1033.101, Tier 0 switch locomotives, Tier 3 and later switch locomotives, and Tier 4 and later line-haul locomotives are not subject to both switch cycle and line-haul cycle standards.

(1) When using credits generated by locomotives covered by paragraph (b) of this section for single cycle locomotives covered by this paragraph (c), you must use both switch and line-haul credits as described in this paragraph (c)(1).

(i) For locomotives subject only to switch cycle standards, calculate the negative switch credits for the credit using locomotive as specified in § 1033.705. Such locomotives also generate an equal number of negative line-haul cycle credits (in Mg).

(ii) For locomotives subject only to line-haul cycle standards, calculate the negative line-haul credits for the credit using locomotive as specified in § 1033.705. Such locomotives also generate an equal number of negative switch cycle credits (in Mg).

(2) Credits generated by Tier 0, Tier 3, or Tier 4 switch locomotives may be used to show compliance with any switch cycle or line-haul cycle standards.

(3) Credits generated by any line-haul locomotives may not be used by Tier 3 or later switch locomotives.

(d) *Tier 4 credit use.* The number of Tier 4 locomotives that can be certified using credits in any year may not exceed 50 percent of the total number of Tier 4 locomotives you produce in that year for U.S. sales.

(e) *Other restrictions.* Other sections of this part may specify additional restrictions for using emission credits under certain special provisions.

§ 1033.745 Compliance with the provisions of this subpart.

The provisions of this section apply to certificate holders.

(a) For each engine family participating in the ABT program, the certificate of conformity is conditional upon full compliance with the provisions of this subpart during and after the model year. You are responsible to establish to our satisfaction that you fully comply with applicable requirements. We may void the certificate of conformity for an engine family if you fail to comply with any provisions of this subpart.

(b) You may certify your engine family to an FEL above an applicable emission standard based on a projection that you will have enough emission credits to offset the deficit for the engine family. However, we may void the certificate of conformity if you cannot show in your final report that you have enough actual emission credits to offset a deficit for any pollutant in an engine family.

(c) We may void the certificate of conformity for an engine family if you fail to keep records, send reports, or give us information we request.

(d) You may ask for a hearing if we void your certificate under this section (see § 1033.920).

§ 1033.750 Changing a locomotive's FEL at remanufacture.

Locomotives are generally required to be certified to the previously applicable emission standard or FEL when remanufactured. This section describes provisions that allow a remanufactured locomotive to be certified to a different FEL (higher or lower).

(a) A remanufacturer may choose to certify a remanufacturing system to change the FEL of a locomotive from a previously applicable FEL or standard. Any locomotives remanufactured using that system are required to comply with the revised FEL for the remainder of their service lives, unless it is changed again under this section during a later remanufacture. Remanufacturers changing an FEL must notify the owner of the locomotive that it is required to comply with that FEL for the remainder of its service life.

(b) Calculate the credits needed or generated as specified in § 1033.705, except as specified in this paragraph. If the locomotive was previously certified to an FEL for the pollutant, use the previously applicable FEL as the standard.

Subpart I—Requirements for Owners and Operators

§ 1033.801 Applicability.

The requirements of this subpart are applicable to railroads and all other owners and operators of locomotives subject to the provisions of this part, except as otherwise specified. The prohibitions related to maintenance in § 1033.815 also applies to anyone performing maintenance on a locomotive subject to the provisions of this part.

§ 1033.805 Remanufacturing requirements.

(a) See the definition of ''remanufacture'' in § 1033.901 to determine if you are remanufacturing your locomotive or engine. (NOTE: Replacing power assemblies one at a time may qualify as remanufacturing, depending on the interval between replacement.)

(b) See the definition of ''new'' in § 1033.901 to determine if remanufacturing your locomotive makes it subject to the requirements of this part. If the locomotive is considered to be new, it is subject to the certification requirements of this part, unless it is exempt under subpart G of this part. The standards to which your locomotive is subject will depend on factors such as the following:

(1) Its date of original manufacture.

(2) The FEL to which it was previously certified, which is listed on the ''Locomotive Emission Control Information'' label.

(3) Its power rating (whether it is above or below 2300 hp).

(4) The calendar year in which it is being remanufactured.

(c) You may comply with the certification requirements of this part for your remanufactured locomotive by either obtaining your own certificate of conformity as specified in subpart C of this part or by having a certifying remanufacturer include your locomotive under its certificate of conformity. In either case, your remanufactured locomotive must be covered by a certificate before it is reintroduced into service.

(d) If you do not obtain your own certificate of conformity from EPA, contact a certifying remanufacturer to have your locomotive included under its certificate of conformity. Confirm with the certificate holder that your locomotive's model, date of original manufacture, previous FEL, and power rating allow it to be covered by the certificate. You must do all of the following:

(1) Comply with the certificate holder's emission-related installation instructions, which should include the following:

(i) A description of how to assemble and adjust the locomotive so that it will operate according to design specifications in the certificate. See paragraph (e) of this section for requirements related to the parts you must use.

(ii) Instructions to remove the Engine Emission Control Information label and replace it with the certificate holder's new label. NOTE: In most cases, you must not remove the Locomotive Emission Control Information label.

(2) Provide to the certificate holder the information it identifies as necessary to comply with the requirements of this part. For example, the certificate holder may require you to provide the information specified by § 1033.735.

(e) For parts unrelated to emissions and emission-related parts not addressed by the certificate holder in the emission-related installation instructions, you may use parts from any source. For emission-related parts listed by the certificate holder in the emission-related installation instructions, you must either use the specified parts or parts certified under § 1033.645 for remanufacturing. If you believe that the certificate holder has included as emission-related parts, parts that are actually unrelated to emissions, you may ask us to exclude such parts from the emission-related installation instructions. NOTE: This paragraph (e) does not apply with respect to parts for maintenance other than remanufacturing; see § 1033.815 for provisions related to general maintenance.

(f) Failure to comply with this section is a violation of 40 CFR 1068.101(a)(1).

§ 1033.810 In-use testing program.

(a) *Applicability*. This section applies to all Class I freight railroads. It does not apply to other owner/operators.

(b) *Testing requirements*. Annually test a sample of locomotives in your fleet. For purposes of this section, your fleet includes both the locomotives that you own and the locomotives that you are leasing. Use the test procedures in subpart F of this part, unless we approve different procedures.

(1) Except for the cases described in paragraph (b)(2) of this section, test at least 0.075 percent of the average number of locomotives in your fleet during the previous calendar year (i.e., determine the number to be tested by multiplying the number of locomotives in the fleet by 0.00075 and rounding up to the next whole number).

(2) We may allow you to test a smaller number of locomotives if we determine that the number of tests otherwise required by this section is not necessary.

(c) *Test locomotive selection*. Unless we specify a different option, select test locomotives as specified in paragraph (c)(1) of this section (Option 1). In no case may you exclude locomotives because of visible smoke, a history of durability problems, or other evidence of malmaintenance. You may test more locomotives than this section requires.

(1) *Option 1*. To the extent possible, select locomotives from each manufacturer and remanufacturer, and from each tier level (e.g., Tier 0, Tier 1 and Tier 2) in proportion to their numbers in the your fleet. Exclude locomotives

tested during the previous year. If possible, select locomotives that have been operated for at least 100 percent of their useful lives. Where there are multiple locomotives meeting the requirements of this paragraph (c)(1), randomly select the locomotives to be tested from among those locomotives. If the number of certified locomotives that have been operated for at least 100 percent of their useful lives is not large enough to fulfill the testing requirement, test locomotives still within their useful lives as follows:

(i) Test locomotives in your fleet that are nearest to the end of their useful lives. You may identify such locomotives as a range of values representing the fraction of the useful life already used up for the locomotives.

(ii) For example, you may determine that 20 percent of your fleet has been operated for at least 75 percent of their useful lives. In such a case, select locomotives for testing that have been operated for at least 75 percent of their useful lives.

(2) *Option 2.* If you hold a certificate for some of your locomotives, you may ask us to allow you to select up to two locomotives as specified in subpart E of this part, and count those locomotives toward both your testing obligations of that subpart and this section.

(3) *Option 3.* You may ask us to allow you to test locomotives that use parts covered under § 1033.645. If we do, it does not change the number of locomotives that you must test.

(4) *Option 4.* We may require that you test specific locomotives, including locomotives that do not meet the criteria specified in any of the options in this section. If we do, we will specify which locomotives to test by January 1 of the calendar year for which testing is required.

(d) *Reporting requirements.* Report all testing done in compliance with the provisions of this section to us within 45 calendar days after the end of each calendar year. At a minimum, include the following:

(1) Your full corporate name and address.

(2) For each locomotive tested, all the following:

(i) Corporate name of the manufacturer and last remanufacturer(s) of the locomotive (including both certificate holder and installer, where different), and the corporate name of the manufacturer or last remanufacturer(s) of the engine if different than that of the manufacturer/remanufacturer(s) of the locomotive.

(ii) Year (and month if known) of original manufacture of the locomotive and the engine, and the manufacturer's model designation of the locomotive and manufacturer's model designation of the engine, and the locomotive identification number.

(iii) Year (and month if known) that the engine last underwent remanufacture, the engine remanufacturer's designation that reflects (or most closely reflects) the engine after the last remanufacture, and the engine family identification.

(iv) The number of MW-hrs and miles (where available) the locomotive has been operated since its last remanufacture.

(v) The emission test results for all measured pollutants.

(e) You do not have to submit a report for any year in which you performed no emission testing under this section.

(f) You may ask us to allow you to submit equivalent emission data collected for other purposes instead of some or all of the test data required by this section. If we allow it in advance, you may report emission data collected using other testing or sampling procedures instead of some or all of the data specified by this section.

(g) Submit all reports to the Designated Compliance Officer.

(h) Failure to comply fully with this section is a violation of 40 CFR 1068.101(a)(2).

[73 FR 37197, June 30, 2008, as amended at 73 FR 59191, Oct. 8, 2008]

§ 1033.815 Maintenance, operation, and repair.

All persons who own, operate, or maintain locomotives are subject to this section, except where we specify that a requirement applies to the owner.

(a) Unless we allow otherwise, all owners of locomotives subject to the provisions of this part must ensure that all emission-related maintenance

is performed on the locomotives, as specified in the maintenance instructions provided by the certifying manufacturer/remanufacturer in compliance with §1033.125 (or maintenance that is equivalent to the maintenance specified by the certifying manufacturer/remanufacturer in terms of maintaining emissions performance).

(b) Perform unscheduled maintenance in a timely manner. This includes malfunctions identified through the locomotive's emission control diagnostics system and malfunctions discovered in components of the diagnostics system itself. For most repairs, this paragraph (b) requires that the maintenance be performed no later than the locomotive's next periodic (92-day) inspection. See paragraph (e) of this section, for reductant replenishment requirements in a locomotive equipped with an SCR system.

(c) Use good engineering judgment when performing maintenance of locomotives subject to the provisions of this part. You must perform all maintenance and repair such that you have a reasonable technical basis for believing the locomotive will continue (after the maintenance or repair) to meet the applicable emission standards and FELs to which it was certified.

(d) The owner of the locomotive must keep records of all maintenance and repairs that could reasonably affect the emission performance of any locomotive subject to the provisions of this part. Keep these records for eight years.

(e) For locomotives equipped with emission controls requiring the use of specific fuels, lubricants, or other fluids, proper maintenance includes complying with the manufacturer/remanufacturer's specifications for such fluids when operating the locomotives. This requirement applies without regard to whether misfueling permanently disables the emission controls. The following additional provisions apply for locomotives equipped with SCR systems requiring the use of urea or other reductants:

(1) You must plan appropriately to ensure that reductant will be available to the locomotive during operation.

(2) If the SCR diagnostic indicates (or you otherwise determine) that either reductant supply or reductant quality in the locomotive is inadequate, you must replace the reductant as soon as practical.

(3) If you operate a locomotive without the appropriate urea or other reductant, you must report such operation to us within 30 days. Note that such operation violates the requirement of this paragraph (e); however, we may consider mitigating factors (such as how long the locomotive was operated without the appropriate urea or other reductant) in determining whether to assess penalties for such violations.

(f) Failure to fully comply with this section is a violation of 40 CFR 1068.101(b).

§1033.820 In-use locomotives.

(a) We may require you to supply in-use locomotives to us for testing. We will specify a reasonable time and place at which you must supply the locomotives and a reasonable period during which we will keep them for testing. We will make reasonable allowances for you to schedule the supply of locomotives to minimize disruption of your operations. The number of locomotives that you must supply is limited as follows:

(1) We will not require a Class I railroad to supply more than five locomotives per railroad per calendar year.

(2) We will not require a non-Class I railroad (or other entity subject to the provisions of this subpart) to supply more than two locomotives per railroad per calendar year. We will request locomotives under this paragraph (a)(2) only for purposes that cannot be accomplished using locomotives supplied under paragraph (a)(1) of this section.

(b) You must make reasonable efforts to supply manufacturers/remanufacturers with the test locomotives needed to fulfill the in-use testing requirements in subpart E of this part.

(c) Failure to fully comply with this section is a violation of 40 CFR 1068.101(a)(2).

§1033.825 Refueling requirements.

(a) If your locomotive operates using a volatile fuel, your refueling equipment must be designed and used to minimize the escape of fuel vapors.

This means you may not use refueling equipment in a way that renders any refueling emission controls inoperative or reduces their effectiveness.

(b) If your locomotive operates using a gaseous fuel, the hoses used to refuel it may not be designed to be bled or vented to the atmosphere under normal operating conditions.

(c) Failing to fully comply with the requirements of this section is a violation of 40 CFR 1068.101(b).

Subpart J—Definitions and Other Reference Information

§ 1033.901 Definitions.

The following definitions apply to this part. The definitions apply to all subparts unless we note otherwise. All undefined terms have the meaning the Clean Air Act gives to them. The definitions follow:

Adjustable parameter means any device, system, or element of design that someone can adjust (including those which are difficult to access) and that, if adjusted, may affect emissions or locomotive performance during emission testing or normal in-use operation. This includes, but is not limited to, parameters related to injection timing and fueling rate. You may ask us to exclude a parameter if you show us that it will not be adjusted in a way that affects emissions during in-use operation.

Aftertreatment means relating to a catalytic converter, particulate filter, or any other system, component, or technology mounted downstream of the exhaust valve (or exhaust port) whose design function is to reduce emissions in the locomotive exhaust before it is exhausted to the environment. Exhaust-gas recirculation (EGR) is not aftertreatment.

Alcohol fuel means a fuel consisting primarily (more than 50 percent by weight) of one or more alcohols: e.g., methyl alcohol, ethyl alcohol.

Alcohol-fueled locomotive means a locomotive with an engine that is designed to run using an alcohol fuel. For purposes of this definition, alcohol fuels do not include fuels with a nominal alcohol content below 25 percent by volume.

Alternator/generator efficiency means the ratio of the electrical power output from the alternator/generator to the mechanical power input to the alternator/generator at the operating point. Note that the alternator/generator efficiency may be different at different operating points. For example, the Institute of Electrical and Electronic Engineers Standard 115 (''Test Procedures for Synchronous Machines'') is an appropriate test procedure for determining alternator/generator efficiency. Other methods may also be used consistent with good engineering judgment.

Applicable emission standard or *applicable standard* means a standard to which a locomotive is subject; or, where a locomotive has been or is being certified to another standard or FEL, the FEL or other standard to which the locomotive has been or is being certified is the applicable standard. This definition does not apply to Subpart H of this part.

Auxiliary emission control device means any element of design that senses temperature, locomotive speed, engine RPM, transmission gear, or any other parameter for the purpose of activating, modulating, delaying, or deactivating the operation of any part of the emission-control system.

Auxiliary engine means a nonroad engine that provides hotel power or power during idle, but does not provide power to propel the locomotive.

Averaging means the exchange of emission credits among engine families within a given manufacturer's, or remanufacturer's product line.

Banking means the retention of emission credits by a credit holder for use in future calendar year averaging or trading as permitted by the regulations in this part.

Brake power means the sum of the alternator/generator input power and the mechanical accessory power, excluding any power required to circulate engine coolant, circulate engine lubricant, supply fuel to the engine, or operate aftertreatment devices.

Calibration means the set of specifications, including tolerances, specific to a particular design, version, or application of a component, or components, or

assembly capable of functionally describing its operation over its working range.

Carryover means relating to certification based on emission data generated from an earlier model year as described in § 1033.235(d).

Certification means the process of obtaining a certificate of conformity for an engine family that complies with the emission standards and requirements in this part, or relating to that process.

Certified emission level means the highest deteriorated emission level in an engine family for a given pollutant from a given test cycle.

Class I freight railroad means a Class I railroad that primarily transports freight rather than passengers.

Class I railroad means a railroad that has been classified as a Class I railroad by the Surface Transportation Board.

Class II railroad means a railroad that has been classified as a Class II railroad by the Surface Transportation Board.

Class III railroad means a railroad that has been classified as a Class III railroad by the Surface Transportation Board.

Clean Air Act means the Clean Air Act, as amended, 42 U.S.C. 7401–7671q.

Configuration means a unique combination of locomotive hardware and calibration within an engine family. Locomotives within a single configuration differ only with respect to normal production variability (or factors unrelated to engine performance or emissions).

Crankcase emissions means airborne substances emitted to the atmosphere from any part of the locomotive crankcase's ventilation or lubrication systems. The crankcase is the housing for the crankshaft and other related internal parts.

Days means calendar days, unless otherwise specified. For example, where we specify working days, we mean calendar days excluding weekends and U.S. national holidays.

Design certify or *certify by design* means to certify a locomotive based on inherent design characteristics rather than your test data, such as allowed under § 1033.625. All other requirements of this part apply for such locomotives.

Designated Compliance Officer means the Manager, Heavy Duty and Nonroad Engine Group (6403–J), U.S. Environmental Protection Agency, 1200 Pennsylvania Ave., NW., Washington, DC 20460.

Deteriorated emission level means the emission level that results from applying the appropriate deterioration factor to the official emission result of the emission-data locomotive.

Deterioration factor means the relationship between emissions at the end of useful life and emissions at the low-hour test point, expressed in one of the following ways:

(1) For multiplicative deterioration factors, the ratio of emissions at the end of useful life to emissions at the low-hour test point.

(2) For additive deterioration factors, the difference between emissions at the end of useful life and emissions at the low-hour test point.

Discrete-mode means relating to the discrete-mode type of steady-state test described in § 1033.515.

Emission control system means any device, system, or element of design that controls or reduces the regulated emissions from a locomotive.

Emission credits represent the amount of emission reduction or exceedance, by a locomotive engine family, below or above the emission standard, respectively. Emission reductions below the standard are considered as ''positive credits,'' while emission exceedances above the standard are considered as ''negative credits.'' In addition, ''projected credits'' refer to emission credits based on the projected applicable production/sales volume of the engine family. ''Reserved credits'' are emission credits generated within a calendar year waiting to be reported to EPA at the end of the calendar year. ''Actual credits'' refer to emission credits based on actual applicable production/sales volume as contained in the end-of-year reports submitted to EPA.

Emission-data locomotive means a locomotive or engine that is tested for certification. This includes locomotives tested to establish deterioration factors.

Emission-related maintenance means maintenance that substantially affects

emissions or is likely to substantially affect emission deterioration.

Engine family has the meaning given in § 1033.230.

Engine used in a locomotive means an engine incorporated into a locomotive or intended for incorporation into a locomotive (whether or not it is used for propelling the locomotive).

Engineering analysis means a summary of scientific and/or engineering principles and facts that support a conclusion made by a manufacturer/remanufacturer, with respect to compliance with the provisions of this part.

EPA Enforcement Officer means any officer or employee of the Environmental Protection Agency so designated in writing by the Administrator or his/her designee.

Exempted means relating to a locomotive that is not required to meet otherwise applicable standards. Exempted locomotives must conform to regulatory conditions specified for an exemption in this part 1033 or in 40 CFR part 1068. Exempted locomotives are deemed to be ''subject to'' the standards of this part, even though they are not required to comply with the otherwise applicable requirements. Locomotives exempted with respect to a certain tier of standards may be required to comply with an earlier tier of standards as a condition of the exemption; for example, locomotives exempted with respect to Tier 3 standards may be required to comply with Tier 2 standards.

Excluded means relating to a locomotive that either has been determined not to be a locomotive (as defined in this section) or otherwise excluded under section § 1033.5. Excluded locomotives are not subject to the standards of this part.

Exhaust emissions means substances (i.e., gases and particles) emitted to the atmosphere from any opening downstream from the exhaust port or exhaust valve of a locomotive engine.

Exhaust-gas recirculation means a technology that reduces emissions by routing exhaust gases that had been exhausted from the combustion chamber(s) back into the locomotive to be mixed with incoming air before or during combustion. The use of valve timing to increase the amount of residual exhaust gas in the combustion chamber(s) that is mixed with incoming air before or during combustion is not considered exhaust-gas recirculation for the purposes of this part.

Freshly manufactured locomotive means a new locomotive that contains fewer than 25 percent previously used parts (weighted by the dollar value of the parts) as described in § 1033.640.

Freshly manufactured engine means a new engine that has not been remanufactured. An engine becomes freshly manufactured when it is originally manufactured.

Family emission limit (FEL) means an emission level declared by the manufacturer/remanufacturer to serve in place of an otherwise applicable emission standard under the ABT program in subpart H of this part. The family emission limit must be expressed to the same number of decimal places as the emission standard it replaces. The family emission limit serves as the emission standard for the engine family with respect to all required testing.

Fuel system means all components involved in transporting, metering, and mixing the fuel from the fuel tank to the combustion chamber(s), including the fuel tank, fuel tank cap, fuel pump, fuel filters, fuel lines, carburetor or fuel-injection components, and all fuel-system vents.

Fuel type means a general category of fuels such as diesel fuel or natural gas. There can be multiple grades within a single fuel type, such as high-sulfur or low-sulfur diesel fuel.

Gaseous fuel means a fuel which is a gas at standard temperature and pressure. This includes both natural gas and liquefied petroleum gas.

Good engineering judgment means judgments made consistent with generally accepted scientific and engineering principles and all available relevant information. See 40 CFR 1068.5 for the administrative process we use to evaluate good engineering judgment.

Green Engine Factor means a factor that is applied to emission measurements from a locomotive or locomotive engine that has had little or no service accumulation. The Green Engine Factor adjusts emission measurements to

be equivalent to emission measurements from a locomotive or locomotive engine that has had approximately 300 hours of use.

High-altitude means relating to an altitude greater than 4000 feet (1220 meters) and less than 7000 feet (2135 meters), or equivalent observed barometric test conditions (approximately 79 to 88 kPa).

High-sulfur diesel fuel means one of the following:

(1) For in-use fuels, high-sulfur diesel fuel means a diesel fuel with a maximum sulfur concentration greater than 500 parts per million.

(2) For testing, high-sulfur diesel fuel has the meaning given in 40 CFR part 1065.

Hotel power means the power provided by an engine on a locomotive to operate equipment on passenger cars of a train; e.g., heating and air conditioning, lights, etc.

Hydrocarbon (HC) means the hydrocarbon group (THC, NMHC, or THCE) on which the emission standards are based for each fuel type as described in §1033.101.

Identification number means a unique specification (for example, a model number/serial number combination) that allows someone to distinguish a particular locomotive from other similar locomotives.

Idle speed means the speed, expressed as the number of revolutions of the crankshaft per unit of time (e.g., rpm), at which the engine is set to operate when not under load for purposes of propelling the locomotive. There are typically one or two idle speeds on a locomotive as follows:

(1) *Normal idle speed* means the idle speed for the idle throttle-notch position for locomotives that have one throttle-notch position, or the highest idle speed for locomotives that have two idle throttle-notch positions.

(2) *Low idle speed* means the lowest idle speed for locomotives that have two idle throttle-notch positions.

Inspect and qualify means to determine that a previously used component or system meets all applicable criteria listed for the component or system in a certificate of conformity for remanufacturing (such as to determine that the component or system is functionally equivalent to one that has not been used previously).

Installer means an individual or entity that assembles remanufactured locomotives or locomotive engines.

Line-haul locomotive means a locomotive that does not meet the definition of switch locomotive. Note that this includes both freight and passenger locomotives.

Liquefied petroleum gas means the commercial product marketed as propane or liquefied petroleum gas.

Locomotive means a self-propelled piece of on-track equipment designed for moving or propelling cars that are designed to carry freight, passengers or other equipment, but which itself is not designed or intended to carry freight, passengers (other than those operating the locomotive) or other equipment. The following other equipment are not locomotives (see 40 CFR parts 86, 89, and 1039 for this diesel-powered equipment):

(1) Equipment designed for operation both on highways and rails is not a locomotive.

(2) Specialized railroad equipment for maintenance, construction, post-accident recovery of equipment, and repairs; and other similar equipment, are not locomotives.

(3) Vehicles propelled by engines with total rated power of less than 750 kW (1006 hp) are not locomotives, unless the owner (which may be a manufacturer) chooses to have the equipment certified to meet the requirements of this part (under §1033.615). Where equipment is certified as a locomotive pursuant to this paragraph (3), it is subject to the requirements of this part for the remainder of its service life. For locomotives propelled by two or more engines, the total rated power is the sum of the rated power of each engine.

Locomotive engine means an engine that propels a locomotive.

Low-hour means relating to a locomotive with stabilized emissions and represents the undeteriorated emission level. This would generally involve less than 300 hours of operation.

Low mileage locomotive means a locomotive during the interval between the time that normal assembly operations and adjustments are completed and the

time that either 10,000 miles of locomotive operation or 300 additional operating hours have been accumulated (including emission testing if performed). Note that we may deem locomotives with additional operation to be low mileage locomotives, consistent with good engineering judgment.

Low-sulfur diesel fuel means one of the following:

(1) For in-use fuels, *low-sulfur diesel fuel* means a diesel fuel market as low-sulfur diesel fuel having a maximum sulfur concentration of 500 parts per million.

(2) For testing, *low-sulfur diesel fuel* has the meaning given in 40 CFR part 1065.

Malfunction means a condition in which the operation of a component in a locomotive or locomotive engine occurs in a manner other than that specified by the certifying manufacturer/remanufacturer (e.g., as specified in the application for certification); or the operation of the locomotive or locomotive engine in that condition.

Manufacture means the physical and engineering process of designing, constructing, and assembling a locomotive or locomotive engine.

Manufacturer has the meaning given in section 216(1) of the Clean Air Act with respect to freshly manufactured locomotives or engines. In general, this term includes any person who manufactures a locomotive or engine for sale in the United States or otherwise introduces a new locomotive or engine into commerce in the United States. This includes importers who import locomotives or engines for resale.

Manufacturer/remanufacturer means the manufacturer of a freshly manufactured locomotive or engine or the remanufacturer of a remanufactured locomotive or engine, as applicable.

Model year means a calendar year in which a locomotive is manufactured or remanufactured.

New, when relating to a locomotive or locomotive engine, has the meaning given in paragraph (1) of this definition, except as specified in paragraph (2) of this definition:

(1) A locomotive or engine is new if its equitable or legal title has never been transferred to an ultimate purchaser. Where the equitable or legal title to a locomotive or engine is not transferred prior to its being placed into service, the locomotive or engine ceases to be new when it is placed into service. A locomotive or engine also becomes new if it is remanufactured or refurbished (as defined in this section). A remanufactured locomotive or engine ceases to be new when placed back into service. With respect to imported locomotives or locomotive engines, the term ''new locomotive'' or ''new locomotive engine'' also means a locomotive or locomotive engine that is not covered by a certificate of conformity under this part or 40 CFR part 92 at the time of importation, and that was manufactured or remanufactured after the effective date of the emission standards in 40 CFR part 92 which would have been applicable to such locomotive or engine had it been manufactured or remanufactured for importation into the United States. Note that replacing an engine in one locomotive with an unremanufactured used engine from a different locomotive does not make a locomotive new.

(2) The provisions of paragraph (1) of this definition do not apply for the following cases:

(i) Locomotives and engines that were originally manufactured before January 1, 1973 are not considered to become new when remanufactured unless they have been upgraded (as defined in this section). The provisions of paragraph (1) of this definition apply for locomotives that have been upgraded.

(ii) Locomotives that are owned and operated by a small railroad and that have never been certified (i.e., manufactured or remanufactured into a certified configuration) are not considered to become new when remanufactured. The provisions of paragraph (1) of this definition apply for locomotives that have previously been remanufactured into a certified configuration.

(iii) Locomotives originally certified under §1033.150(e) do not become new when remanufactured, except as specified in §1033.615.

(iv) Locomotives that operate only on non-standard gauge rails do not become new when remanufactured if no certified remanufacturing system is available for them.

Nonconforming means relating to a locomotive that is not covered by a certificate of conformity prior to importation or being offered for importation (or for which such coverage has not been adequately demonstrated to EPA); or a locomotive which was originally covered by a certificate of conformity, but which is not in a certified configuration, or otherwise does not comply with the conditions of that certificate of conformity. (NOTE: Domestic locomotives and locomotive engines not covered by a certificate of conformity prior to their introduction into U.S. commerce are considered to be noncomplying locomotives and locomotive engines.)

Non-locomotive-specific engine means an engine that is sold for and used in non-locomotive applications much more than for locomotive applications.

Nonmethane hydrocarbon has the meaning given in 40 CFR 1065.1001. This generally means the difference between the emitted mass of total hydrocarbons and the emitted mass of methane.

Nonroad means relating to nonroad engines as defined in 40 CFR 1068.30.

Official emission result means the measured emission rate for an emission-data locomotive on a given duty cycle before the application of any deterioration factor, but after the application of regeneration adjustment factors, Green Engine Factors, and/or humidity correction factors.

Opacity means the fraction of a beam of light, expressed in percent, which fails to penetrate a plume of smoke, as measured by the procedure specified in § 1033.525.

Original manufacture means the event of freshly manufacturing a locomotive or locomotive engine. The date of original manufacture is the date of final assembly, except as provided in § 1033.640. Where a locomotive is manufactured under § 1033.620(b), the date of original manufacture is the date on which the final assembly of locomotive was originally scheduled.

Original remanufacture means the first remanufacturing of a locomotive at which the locomotive is subject to the emission standards of this part.

Owner/operator means the owner and/or operator of a locomotive.

Owners manual means a written or electronic collection of instructions provided to ultimate purchasers to describe the basic operation of the locomotive.

Oxides of nitrogen has the meaning given in 40 CFR part 1065.

Particulate trap means a filtering device that is designed to physically trap all particulate matter above a certain size.

Passenger locomotive means a locomotive designed and constructed for the primary purpose of propelling passenger trains, and providing power to the passenger cars of the train for such functions as heating, lighting and air conditioning.

Petroleum fuel means gasoline or diesel fuel or another liquid fuel primarily derived from crude oil.

Placed into service means put into initial use for its intended purpose after becoming new.

Power assembly means the components of an engine in which combustion of fuel occurs, and consists of the cylinder, piston and piston rings, valves and ports for admission of charge air and discharge of exhaust gases, fuel injection components and controls, cylinder head and associated components.

Primary fuel means the type of fuel (e.g., diesel fuel) that is consumed in the greatest quantity (mass basis) when the locomotive is operated in use.

Produce means to manufacture or remanufacture. Where a certificate holder does not actually assemble the locomotives or locomotive engines that it manufactures or remanufactures, produce means to allow other entities to assemble locomotives under the certificate holder's certificate.

Railroad means a commercial entity that operates locomotives to transport passengers or freight.

Ramped-modal means relating to the ramped-modal type of testing in subpart F of this part.

Rated power has the meaning given in § 1033.140.

Refurbish has the meaning given in § 1033.640.

Remanufacture means one of the following:

(1)(i) To replace, or inspect and qualify, each and every power assembly of a locomotive or locomotive engine,

whether during a single maintenance event or cumulatively within a five-year period.

(ii) To upgrade a locomotive or locomotive engine.

(iii) To convert a locomotive or locomotive engine to enable it to operate using a fuel other than it was originally manufactured to use.

(iv) To install a remanufactured engine or a freshly manufactured engine into a previously used locomotive.

(v) To repair a locomotive engine that does not contain power assemblies to a condition that is equivalent to or better than its original condition with respect to reliability and fuel consumption.

(2) Remanufacture also means the act of remanufacturing.

Remanufacture system or *remanufacturing system* means all components (or specifications for components) and instructions necessary to remanufacture a locomotive or locomotive engine in accordance with applicable requirements of this part or 40 CFR part 92.

Remanufactured locomotive means either a locomotive powered by a remanufactured locomotive engine, a repowered locomotive, or a refurbished locomotive.

Remanufactured locomotive engine means a locomotive engine that has been remanufactured.

Remanufacturer has the meaning given to ''manufacturer'' in section 216(1) of the Clean Air Act with respect to remanufactured locomotives. (See §§ 1033.1 and 1033.601 for applicability of this term.) This term includes:

(1) Any person that is engaged in the manufacture or assembly of remanufactured locomotives or locomotive engines, such as persons who:

(i) Design or produce the emission-related parts used in remanufacturing.

(ii) Install parts in an existing locomotive or locomotive engine to remanufacture it.

(iii) Own or operate the locomotive or locomotive engine and provide specifications as to how an engine is to be remanufactured (i.e., specifying who will perform the work, when the work is to be performed, what parts are to be used, or how to calibrate the adjustable parameters of the engine).

(2) Any person who imports remanufactured locomotives or remanufactured locomotive engines.

Repower means replacement of the engine in a previously used locomotive with a freshly manufactured locomotive engine. See § 1033.640.

Repowered locomotive means a locomotive that has been repowered with a freshly manufactured engine.

Revoke has the meaning given in 40 CFR 1068.30. In general this means to terminate the certificate or an exemption for an engine family.

Round means to round numbers as specified in 40 CFR 1065.1001.

Service life means the total life of a locomotive. Service life begins when the locomotive is originally manufactured and continues until the locomotive is permanently removed from service.

Small manufacturer/remanufacturer means a manufacturer/remanufacturer with 1,000 or fewer employees. For purposes of this part, the number of employees includes all employees of the manufacturer/remanufacturer's parent company, if applicable.

Small railroad means a railroad meeting the criterion of paragraph (1) of this definition, but not either of the criteria of paragraphs (2) and (3) of this definition.

(1) To be considered a small railroad, a railroad must qualify as a small business under the Small Business Administration's regulations in 13 CFR part 121.

(2) Class I and Class II railroads (and their subsidiaries) are not small railroads.

(3) Intercity passenger and commuter railroads are excluded from this definition of small railroad. Note that this paragraph (3) does not exclude tourist railroads.

Specified adjustable range means the range of allowable settings for an adjustable component specified by a certificate of conformity.

Specified by a certificate of conformity or *specified in a certificate of conformity* means stated or otherwise specified in a certificate of conformity or an approved application for certification.

Sulfur-sensitive technology means an emission-control technology that would experience a significant drop in

emission control performance or emission-system durability when a locomotive is operated on low-sulfur fuel with a sulfur concentration of 300 to 500 ppm as compared to when it is operated on ultra low-sulfur fuel (i.e., fuel with a sulfur concentration less than 15 ppm). Exhaust-gas recirculation is not a sulfur-sensitive technology.

Suspend has the meaning given in 40 CFR 1068.30. In general this means to temporarily discontinue the certificate or an exemption for an engine family.

Switch locomotive means a locomotive that is powered by an engine with a maximum rated power (or a combination of engines having a total rated power) of 2300 hp or less. Include auxiliary engines in your calculation of total power if the engines are permanently installed on the locomotive and can be operated while the main propulsion engine is operating. Do not count the power of auxiliary engines that operate only to reduce idling time of the propulsion engine.

Test locomotive means a locomotive or engine in a test sample.

Test sample means the collection of locomotives or engines selected from the population of an engine family for emission testing. This may include testing for certification, production-line testing, or in-use testing.

Tier 0 or *Tier 0+* means relating to the Tier 0 emission standards, as shown in § 1033.101.

Tier 1 or *Tier 1+* means relating to the Tier 1 emission standards, as shown in § 1033.101.

Tier 2 or *Tier 2+* means relating to the Tier 2 emission standards, as shown in § 1033.101.

Tier 3 means relating to the Tier 3 emission standards, as shown in § 1033.101.

Tier 4 means relating to the Tier 4 emission standards, as shown in § 1033.101.

Total hydrocarbon has the meaning given in 40 CFR 1065.1001. This generally means the combined mass of organic compounds measured by the specified procedure for measuring total hydrocarbon, expressed as a hydrocarbon with an atomic hydrogen-to-carbon ratio of 1.85:1.

Total hydrocarbon equivalent has the meaning given in 40 CFR 1065.1001. This generally means the sum of the carbon mass contributions of non-oxygenated hydrocarbons, alcohols and aldehydes, or other organic compounds that are measured separately as contained in a gas sample, expressed as exhaust hydrocarbon from petroleum-fueled locomotives. The atomic hydrogen-to-carbon mass ratio of the equivalent hydrocarbon is 1.85:1.

Ultimate purchaser means the first person who in good faith purchases a new locomotive for purposes other than resale.

Ultra low-sulfur diesel fuel means one of the following:

(1) For in-use fuels, *ultra low-sulfur diesel fuel* means a diesel fuel marketed as ultra low-sulfur diesel fuel having a maximum sulfur concentration of 15 parts per million.

(2) For testing, *ultra low-sulfur diesel fuel* has the meaning given in 40 CFR part 1065.

Upcoming model year means for an engine family the model year after the one currently in production.

Upgrade means one of the following types of remanufacturing.

(1) Repowering a locomotive that was originally manufactured prior to January 1, 1973.

(2) Refurbishing a locomotive that was originally manufactured prior to January 1, 1973 in a manner that is not freshly manufacturing.

(3) Modifying a locomotive that was originally manufactured prior to January 1, 1973 (or a locomotive that was originally manufactured on or after January 1, 1973, and that is not subject to the emission standards of this part), such that it is intended to comply with the Tier 0 standards. See § 1033.615.

Useful life means the period during which the locomotive engine is designed to properly function in terms of reliability and fuel consumption, without being remanufactured, specified as work output or miles. It is the period during which a locomotive is required to comply with all applicable emission standards. *See* § 1033.101(g).

Void has the meaning given in 40 CFR 1068.30. In general this means to invalidate a certificate or an exemption both retroactively and prospectively.

Volatile fuel means a volatile liquid fuel or any fuel that is a gas at atmospheric pressure. Gasoline, natural gas, and LPG are volatile fuels.

Volatile liquid fuel means any liquid fuel other than diesel or biodiesel that is a liquid at atmospheric pressure and has a Reid Vapor Pressure higher than 2.0 pounds per square inch.

We (us, our) means the Administrator of the Environmental Protection Agency and any authorized representatives.

[73 FR 37197, June 30, 2008, as amended at 73 FR 59191, Oct. 8, 2008; 75 FR 22987, Apr. 30, 2010]

§ 1033.905 Symbols, acronyms, and abbreviations.

The following symbols, acronyms, and abbreviations apply to this part:

ABT averaging, banking, and trading.
AECD auxiliary emission control device.
AESS automatic engine stop/start
AF adjustment factor (*see* § 1033.530).
CFR Code of Federal Regulations.
CH_4 methane.
CO carbon monoxide.
CO_2 carbon dioxide.
EPA Environmental Protection Agency.
FEL Family Emission Limit.
g/bhp-hr grams per brake horsepower-hour.
HC hydrocarbon.
hp horsepower.
LPG liquefied petroleum gas.
LSD low sulfur diesel.
MW megawatt.
N_2O nitrous oxide.
NIST National Institute of Standards and Technology.
NMHC nonmethane hydrocarbons.
NO_X oxides of nitrogen.
PM particulate matter.
rpm revolutions per minute.
SAE Society of Automotive Engineers.
SCR selective catalytic reduction.
SEA Selective Enforcement Audit.
THC total hydrocarbon.
THCE total hydrocarbon equivalent.
UL useful life.
ULSD ultra low sulfur diesel.
U.S. United States.
U.S.C. United States Code.

[73 FR 37197, June 30, 2008, as amended at 74 FR 56508, Oct. 30, 2008; 75 FR 22987, Apr. 30, 2010]

§ 1033.915 Confidential information.

(a) Clearly show what you consider confidential by marking, circling, bracketing, stamping, or some other method.

(b) We will store your confidential information as described in 40 CFR part 2. Also, we will disclose it only as specified in 40 CFR part 2. This applies both to any information you send us and to any information we collect from inspections, audits, or other site visits.

(c) If you send us a second copy without the confidential information, we will assume it contains nothing confidential whenever we need to release information from it.

(d) If you send us information without claiming it is confidential, we may make it available to the public without further notice to you, as described in 40 CFR 2.204.

§ 1033.920 How to request a hearing.

(a) You may request a hearing under certain circumstances, as described elsewhere in this part. To do this, you must file a written request, including a description of your objection and any supporting data, within 30 days after we make a decision.

(b) For a hearing you request under the provisions of this part, we will approve your request if we find that your request raises a substantial factual issue.

(c) If we agree to hold a hearing, we will use the procedures specified in 40 CFR part 1068, subpart G.

§ 1033.925 Reporting and recordkeeping requirements.

Under the Paperwork Reduction Act (44 U.S.C. 3501 *et seq.*), the Office of Management and Budget approves the reporting and recordkeeping specified in the applicable regulations. Failing to properly report information and keep the records we specify violates 40 CFR 1068.101(a)(2), which may involve civil or criminal penalties. The following items illustrate the kind of reporting and recordkeeping we require for engines regulated under this part:

(a) We specify the following requirements related to engine certification in this part 1033:

(1) In § 1033.150 we state the requirements for interim provisions.

(2) In subpart C of this part we identify a wide range of information required to certify engines.

(3) In §1033.325 we specify certain records related to production-line testing.

(4) In subpart G of this part we identify several reporting and recordkeeping items for making demonstrations and getting approval related to various special compliance provisions.

(5) In §§1033.725, 1033.730, and 1033.735 we specify certain records related to averaging, banking, and trading.

(6) In subpart I of this part we specify certain records related to meeting requirements for remanufactured engines.

(b) We specify the following requirements related to testing in 40 CFR part 1065:

(1) In 40 CFR 1065.2 we give an overview of principles for reporting information.

(2) In 40 CFR 1065.10 and 1065.12 we specify information needs for establishing various changes to published test procedures.

(3) In 40 CFR 1065.25 we establish basic guidelines for storing test information.

(4) In 40 CFR 1065.695 we identify the specific information and data items to record when measuring emissions.

(c) We specify the following requirements related to the general compliance provisions in 40 CFR part 1068:

(1) In 40 CFR 1068.5 we establish a process for evaluating good engineering judgment related to testing and certification.

(2) In 40 CFR 1068.25 we describe general provisions related to sending and keeping information.

(3) In 40 CFR 1068.27 we require manufacturers to make engines available for our testing or inspection if we make such a request.

(4) In 40 CFR 1068.105 we require vessel manufacturers to keep certain records related to duplicate labels from engine manufacturers.

(5) In 40 CFR 1068.120 we specify recordkeeping related to rebuilding engines.

(6) In 40 CFR part 1068, subpart C, we identify several reporting and recordkeeping items for making demonstrations and getting approval related to various exemptions.

(7) In 40 CFR part 1068, subpart D, we identify several reporting and recordkeeping items for making demonstrations and getting approval related to importing engines.

(8) In 40 CFR 1068.450 and 1068.455 we specify certain records related to testing production-line engines in a selective enforcement audit.

(9) In 40 CFR 1068.501 we specify certain records related to investigating and reporting emission-related defects.

(10) In 40 CFR 1068.525 and 1068.530 we specify certain records related to recalling nonconforming engines.

[75 FR 22987, Apr. 30, 2010]

PART 1039—CONTROL OF EMISSIONS FROM NEW AND IN-USE NONROAD COMPRESSION-IGNITION ENGINES

Subpart A—Overview and Applicability

Sec.
1039.1 Does this part apply for my engines?
1039.2 Who is responsible for compliance?
1039.5 Which engines are excluded from this part's requirements?
1039.10 How is this part organized?
1039.15 Do any other regulation parts apply to me?
1039.20 What requirements from this part apply to excluded stationary engines?
1039.30 Submission of information.

Subpart B—Emission Standards and Related Requirements

1039.101 What exhaust emission standards must my engines meet after the 2014 model year?
1039.102 What exhaust emission standards and phase-in allowances apply for my engines in model year 2014 and earlier?
1039.104 Are there interim provisions that apply only for a limited time?
1039.105 What smoke standards must my engines meet?
1039.107 What evaporative emission standards and requirements apply?
1039.110 [Reserved]
1039.115 What other requirements apply?
1039.120 What emission-related warranty requirements apply to me?
1039.125 What maintenance instructions must I give to buyers?
1039.130 What installation instructions must I give to equipment manufacturers?
1039.135 How must I label and identify the engines I produce?
1039.140 What is my engine's maximum engine power?

Subpart C—Certifying Engine Families

1039.201 What are the general requirements for obtaining a certificate of conformity?
1039.205 What must I include in my application?
1039.210 May I get preliminary approval before I complete my application?
1039.220 How do I amend the maintenance instructions in my application?
1039.225 How do I amend my application for certification?
1039.230 How do I select engine families?
1039.235 What testing requirements apply for certification?
1039.240 How do I demonstrate that my engine family complies with exhaust emission standards?
1039.245 How do I determine deterioration factors from exhaust durability testing?
1039.250 What records must I keep and what reports must I send to EPA?
1039.255 What decisions may EPA make regarding my certificate of conformity?

Subpart D [Reserved]

Subpart E—In-use Testing

1039.401 General provisions.

Subpart F—Test Procedures

1039.501 How do I run a valid emission test?
1039.505 How do I test engines using steady-state duty cycles, including ramped-modal testing?
1039.510 Which duty cycles do I use for transient testing?
1039.515 What are the test procedures related to not-to-exceed standards?
1039.520 What testing must I perform to establish deterioration factors?
1039.525 How do I adjust emission levels to account for infrequently regenerating aftertreatment devices?

Subpart G—Special Compliance Provisions

1039.601 What compliance provisions apply to these engines?
1039.605 What provisions apply to engines certified under the motor-vehicle program?
1039.610 What provisions apply to vehicles certified under the motor-vehicle program?
1039.615 What special provisions apply to engines using noncommercial fuels?
1039.620 What are the provisions for exempting engines used solely for competition?
1039.625 What requirements apply under the program for equipment-manufacturer flexibility?
1039.626 What special provisions apply to equipment imported under the equipment-manufacturer flexibility program?
1039.627 What are the incentives for equipment manufacturers to use cleaner engines?
1039.630 What are the economic hardship provisions for equipment manufacturers?
1039.635 What are the hardship provisions for engine manufacturers?
1039.640 What special provisions apply to branded engines?
1039.645 What special provisions apply to engines used for transportation refrigeration units?
1039.650 [Reserved]
1039.655 What special provisions apply to engines sold in Guam, American Samoa, or the Commonwealth of the Northern Mariana Islands?
1039.660 What special provisions apply to Independent Commercial Importers?

Subpart H—Averaging, Banking, and Trading for Certification

1039.701 General provisions.
1039.705 How do I generate and calculate emission credits?
1039.710 How do I average emission credits?
1039.715 How do I bank emission credits?
1039.720 How do I trade emission credits?
1039.725 What must I include in my application for certification?
1039.730 What ABT reports must I send to EPA?
1039.735 What records must I keep?
1039.740 What restrictions apply for using emission credits?
1039.745 What can happen if I do not comply with the provisions of this subpart?

Subpart I—Definitions and Other Reference Information

1039.801 What definitions apply to this part?
1039.805 What symbols, acronyms, and abbreviations does this part use?
1039.815 What provisions apply to confidential information?
1039.820 How do I request a hearing?
1039.825 What reporting and recordkeeping requirements apply under this part?
APPENDIX I TO PART 1039 [RESERVED]
APPENDIX II TO PART 1039—STEADY-STATE DUTY CYCLES
APPENDIX III TO PART 1039 [RESERVED]
APPENDIX IV TO PART 1039 [RESERVED]
APPENDIX V TO PART 1039 [RESERVED]
APPENDIX VI TO PART 1039—NONROAD COMPRESSION-IGNITION COMPOSITE TRANSIENT CYCLE

AUTHORITY: 42 U.S.C. 7401–7671q.

SOURCE: 69 FR 39213, June 29, 2004, unless otherwise noted.

Subpart A—Overview and Applicability

§ 1039.1 Does this part apply for my engines?

(a) The regulations in this part 1039 apply for all new, compression-ignition nonroad engines (defined in § 1039.801), except as provided in § 1039.5.

(b) This part 1039 applies as follows:

(1) This part 1039 applies for all engines subject to the emission standards specified in subpart B of this part starting with the model years noted in the following table:

TABLE 1 OF § 1039.1—PART 1039 APPLICABILITY BY MODEL YEAR

Power category	Model year
kW < 19	[1] 2008
19 ≤ kW < 56	[2] 2008
56 ≤ kW < 130	2012
130 ≤ kW ≤ 560	2011
kW > 560	2011

[1] As described in § 1039.102, some engines below 19 kW may not be subject to the emission standards in this part until the 2010 model year.

[2] As described in § 1039.102, some engines in the 19–56 kW power category may not be subject to the emission standards in this part until the 2012 model year.

(2) If you use the provisions of § 1039.104(a) to certify an engine to the emission standards of this part before the model years shown in Table 1 of this section, all the requirements of this part apply for those engines.

(3) See 40 CFR part 89 for requirements that apply to engines not yet subject to the requirements of this part 1039.

(4) This part 1039 applies for other compression-ignition engines as follows:

(i) The provisions of paragraph (c) of this section and § 1039.801 apply for stationary engines beginning January 1, 2006.

(ii) The provisions of § 1039.620 and § 1039.801 apply for engines used solely for competition beginning January 1, 2006.

(c) The definition of nonroad engine in 40 CFR 1068.30 excludes certain engines used in stationary applications. These engines may be required by subpart IIII of 40 CFR part 60 to comply with some of the provisions of this part 1039; otherwise, these engines are only required to comply with the requirements in § 1039.20. In addition, the prohibitions in 40 CFR 1068.101 restrict the use of stationary engines for nonstationary purposes unless they are certified under this part 1039, or under the provisions of 40 CFR part 89 or 40 CFR part 94, to the same standards that would apply to nonroad engines for the same model year.

(d) In certain cases, the regulations in this part 1039 apply to engines at or above 250 kW that would otherwise be covered by 40 CFR part 1048. See 40 CFR 1048.620 for provisions related to this allowance.

[69 FR 39213, June 29, 2004, as amended at 70 FR 40462, July 13, 2005; 71 FR 39184, July 11, 2006]

§ 1039.2 Who is responsible for compliance?

The regulations in this part 1039 contain provisions that affect both engine manufacturers and others. However, the requirements of this part are generally addressed to the engine manufacturer. The term ''you'' generally means the engine manufacturer, as defined in § 1039.801, especially for issues related to certification.

[75 FR 22988, Apr. 30, 2010]

§ 1039.5 Which engines are excluded from this part's requirements?

This part does not apply to the following nonroad engines:

(a) *Locomotive engines.* (1) The following locomotive engines are not subject to the provisions of this part 1039:

(i) Engines in locomotives certified under 40 CFR part 1033.

(ii) Engines in locomotives that are exempt from the standards of 40 CFR part 92 or 1033 pursuant to the provisions of 40 CFR part 1033 or 1068 (except for the provisions of 40 CFR 1033.150(e)).

(2) The following locomotive engines are subject to the provisions of this part 1039:

(i) Engines in locomotives exempt from 40 CFR part 1033 pursuant to the provisions of 40 CFR 1033.150(e).

(ii) Locomotive engines excluded from the definition of locomotive in 40 CFR 1033.901.

(b) *Marine engines.* (1) The following marine engines are not subject to the provisions of this part 1039:

(i) Engines subject to the standards of 40 CFR part 94.

(ii) Engines not subject to the standards of 40 CFR part 94 only because they were produced before the standards of 40 CFR part 94 started to apply.

(iii) Engines that are exempt from the standards of 40 CFR part 94 pursuant to the provisions of 40 CFR part 94 (except for the provisions of 40 CFR 94.907 or 94.912). For example, an engine that is exempt under 40 CFR 94.906 because it is a manufacturer-owned engine is not subject to the provisions of this part 1039.

(iv) Engines with rated power below 37 kW.

(v) Engines on foreign vessels.

(2) Marine engines are subject to the provisions of this part 1039 if they are exempt from 40 CFR part 94 based on the engine-dressing provisions of 40 CFR 94.907 or the common-family provisions of 40 CFR 94.912.

(c) *Mining engines.* Engines used in underground mining or in underground mining equipment and regulated by the Mining Safety and Health Administration in 30 CFR parts 7, 31, 32, 36, 56, 57, 70, and 75 are not subject to the provisions of this part 1039.

(d) *Hobby engines.* Engines installed in reduced-scale models of vehicles that are not capable of transporting a person are not subject to the provisions of this part 1039.

(e) *Engines used in recreational vehicles.* Engines certified to meet the requirements of 40 CFR part 1051 or are otherwise subject to 40 CFR part 1051 (for example, engines used in snowmobiles and all-terrain vehicles) are not subject to the provisions of this part 1039.

[69 FR 39213, June 29, 2004, as amended at 70 FR 40462, July 13, 2005; 73 FR 59191, Oct. 8, 2008; 75 FR 22988, Apr. 30, 2010]

§ 1039.10 How is this part organized?

This part 1039 is divided into the following subparts:

(a) Subpart A of this part defines the applicability of part 1039 and gives an overview of regulatory requirements.

(b) Subpart B of this part describes the emission standards and other requirements that must be met to certify engines under this part. Note that § 1039.102 and § 1039.104 discuss certain interim requirements and compliance provisions that apply only for a limited time.

(c) Subpart C of this part describes how to apply for a certificate of conformity.

(d) [Reserved]

(e) Subpart E of this part describes general provisions for testing in-use engines.

(f) Subpart F of this part describes how to test your engines (including references to other parts of the Code of Federal Regulations).

(g) Subpart G of this part and 40 CFR part 1068 describe requirements, prohibitions, and other provisions that apply to engine manufacturers, equipment manufacturers, owners, operators, rebuilders, and all others.

(h) Subpart H of this part describes how you may generate and use emission credits to certify your engines.

(i) Subpart I of this part contains definitions and other reference information.

[69 FR 39213, June 29, 2004, as amended at 70 FR 40462, July 13, 2005; 72 FR 53129, Sept. 18, 2007]

§ 1039.15 Do any other regulation parts apply to me?

(a) Part 1065 of this chapter describes procedures and equipment specifications for testing engines to measure exhaust emissions. Subpart F of this part 1039 describes how to apply the provisions of part 1065 of this chapter to determine whether engines meet the exhaust emission standards in this part.

(b) The requirements and prohibitions of part 1068 of this chapter apply to everyone, including anyone who manufactures, imports, installs, owns, operates, or rebuilds any of the engines subject to this part 1039, or equipment containing these engines. Part 1068 of this chapter describes general provisions, including these seven areas:

(1) Prohibited acts and penalties for engine manufacturers, equipment manufacturers, and others.

(2) Rebuilding and other aftermarket changes.

(3) Exclusions and exemptions for certain engines.

(4) Importing engines.

(5) Selective enforcement audits of your production.

(6) Defect reporting and recall.

(7) Procedures for hearings.

(c) Other parts of this chapter apply if referenced in this part.

[69 FR 39213, June 29, 2004, as amended at 75 FR 22988, Apr. 30, 2010]

§ 1039.20 What requirements from this part apply to excluded stationary engines?

The provisions of this section apply for engines built on or after January 1, 2006.

(a) You must add a permanent label or tag to each new engine you produce or import that is excluded under § 1039.1(c) as a stationary engine and is not required by 40 CFR part 60, subpart IIII, to meet the requirements of this part 1039, or the requirements of parts 89 or 94, that are equivalent to the requirements applicable to nonroad or marine engines for the same model year. To meet labeling requirements, you must do the following things:

(1) Attach the label or tag in one piece so no one can remove it without destroying or defacing it.

(2) Secure it to a part of the engine needed for normal operation and not normally requiring replacement.

(3) Make sure it is durable and readable for the engine's entire life.

(4) Write it in English.

(5) Follow the requirements in § 1039.135(g) regarding duplicate labels if the engine label is obscured in the final installation.

(b) Engine labels or tags required under this section must have the following information:

(1) Include the heading ''EMISSION CONTROL INFORMATION.''

(2) Include your full corporate name and trademark. You may instead include the fill corporate name and trademark of another company you choose to designate.

(3) State the engine displacement (in liters) and maximum engine power (or in the case of fire pumps, NFPA nameplate engine power).

(4) State: ''THIS ENGINE IS EXEMPTED FROM THE REQUIREMENTS OF 40 CFR PARTS 89 AND 1039 AS A ''STATIONARY ENGINE.'' INSTALLING OR USING THIS ENGINE IN ANY OTHER APPLICATION MAY BE A VIOLATION OF FEDERAL LAW SUBJECT TO CIVIL PENALTY.''

(c) Stationary engines required by 40 CFR part 60, subpart IIII, to meet the requirements of this part 1039, or parts 89 or 94, must meet the labeling requirements of 40 CFR 60.4210.

[69 FR 39213, June 29, 2004, as amended at 71 FR 39185, July 11, 2006]

EFFECTIVE DATE NOTE: At 76 FR 37977, June 28, 2011, § 1039.20 was amended by revising paragraph (a) introductory text and paragraph (c), effective August 29, 2011. For the convenience of the user, the revised text is set forth as follows:

§ 1039.20 What requirements from this part apply to excluded stationary engines?

* * * * *

(a) You must add a permanent label or tag to each new engine you produce or import that is excluded under § 1039.1(c) as a stationary engine and is not required by 40 CFR part 60, subpart IIII, to meet the requirements of this part 1039, or the requirements of 40 CFR parts 89, 94 or 1042, that are equivalent to the requirements applicable to marine or land-based nonroad engines for the same model year. To meet labeling requirements, you must do the following things:

* * * * *

(c) Stationary engines required by 40 CFR part 60, subpart IIII, to meet the requirements of this part 1039, or part 89, 94 or 1042, must meet the labeling requirements of 40 CFR 60.4210.

§ 1039.30 Submission of information.

(a) This part includes various requirements to record data or other information. Refer to § 1039.825 and 40 CFR 1068.25 regarding recordkeeping requirements. Unless we specify otherwise, store these records in any format and on any media and keep them readily available for one year after you send an associated application for certification, or one year after you generate the data if they do not support an application for certification. You must promptly send us organized, written records in English if we ask for them. We may review them at any time.

(b) The regulations in § 1039.255 and 40 CFR 1068.101 describe your obligation to report truthful and complete information and the consequences of failing to meet this obligation. This includes information not related to certification.

(c) Send all reports and requests for approval to the Designated Compliance Officer (*see* § 1039.801).

(d) Any written information we require you to send to or receive from another company is deemed to be a required record under this section. Such records are also deemed to be submissions to EPA. We may require you to send us these records whether or not you are a certificate holder.

[75 FR 22988, Apr. 30, 2010]

Subpart B—Emission Standards and Related Requirements

§ 1039.101 What exhaust emission standards must my engines meet after the 2014 model year?

The exhaust emission standards of this section apply after the 2014 model year. Certain of these standards also apply for model year 2014 and earlier. This section presents the full set of emission standards that apply after all the transition and phase-in provisions of § 1039.102 and § 1039.104 expire. See § 1039.102 and 40 CFR 89.112 for exhaust emission standards that apply to 2014 and earlier model years. Section 1039.105 specifies smoke standards.

(a) *Emission standards for transient testing.* Transient exhaust emissions from your engines may not exceed the applicable emission standards in Table 1 of this section. Measure emissions using the applicable transient test procedures described in subpart F of this part. The following engines are not subject to the transient standards in this paragraph (a):

(1) Engines above 560 kW.

(2) Constant-speed engines.

(b) *Emission standards for steady-state testing.* Steady-state exhaust emissions from your engines may not exceed the applicable emission standards in Table 1 of this section. Measure emissions using the applicable steady-state test procedures described in subpart F of this part.

TABLE 1 OF § 1039.101—TIER 4 EXHAUST EMISSION STANDARDS AFTER THE 2014 MODEL YEAR, G/KW-HR [1]

Maximum engine power	Application	PM	NO_X	NMHC	NO_X+NMHC	CO
kW < 19	All	[2] 0.40			7.5	[3] 6.6
19 ≤ kW < 56	All	0.03			4.7	[4] 5.0
56 ≤ kW < 130	All	0.02	0.40	0.19		5.0
130 ≤ kW ≤ 560	All	0.02	0.40	0.19		3.5
	Generator sets	0.03	0.67	0.19		3.5
kW > 560	All except generator sets	0.04	3.5	0.19		3.5

[1] Note that some of these standards also apply for 2014 and earlier model years. This table presents the full set of emission standards that apply after all the transition and phase-in provisions of § 1039.102 expire.
[2] See paragraph (c) of this section for provisions related to an optional PM standard for certain engines below 8 kW.
[3] The CO standard is 8.0 g/kW-hr for engines below 8 kW.
[4] The CO standard is 5.5 g/kW-hr for engines below 37 kW.

(c) *Optional PM standard for engines below 8 kW.* You may certify hand-startable, air-cooled, direct injection engines below 8 kW to an optional Tier 4 PM standard of 0.60 g/kW-hr. The term hand-startable generally refers to engines that are started using a hand crank or pull cord. This PM standard applies to both steady-state and transient testing, as described in paragraphs (a) and (b) of this section. Engines certified under this paragraph (c) may not be used to generate PM or NO_X+NMHC emission credits under the provisions of subpart H of this part. These engines may use PM or NO_X+NMHC emission credits, subject to the FEL caps in paragraph (d)(1) of this section.

(d) *Averaging, banking, and trading.* You may generate or use emission credits under the averaging, banking, and trading (ABT) program, as described in subpart H of this part. This requires that you specify a family emission limit (FEL) for each pollutant you include in the ABT program for each engine family. These FELs serve as the emission standards for the engine family with respect to all required testing instead of the standards specified in paragraphs (a) and (b) of this section. The FELs determine the

not-to-exceed standards for your engine family, as specified in paragraph (e) of this section.

(1) *Primary FEL caps.* The FEL may not be higher than the limits in Table 2 of this section, except as allowed by paragraph (d)(2) of this section or by § 1039.102:

TABLE 2 OF § 1039.101—TIER 4 FEL CAPS AFTER THE 2014 MODEL YEAR, G/KW-HR

Maximum engine power	Application	PM	NO_X	NO_X+NMHC
kW < 19	All	0.80		[1] 9.5
19 ≤ kW < 56	All	0.05		7.5
56 ≤ kW < 130	All	0.04	0.80	
130 ≤ kW ≤ 560	All	0.04	0.80	
kW > 560	Generator sets	0.05	1.07	
	All except generator sets	0.07	6.2	

[1] For engines below 8 kW, the FEL cap is 10.5 g/kW-hr for NO_X+NMHC emissions.

(2) *Alternate FEL caps.* For a given power category, you may use the alternate FEL caps shown in Table 3 of this section instead of the FEL caps identified in paragraph (d)(1) of this section for up to 5 percent of your U.S.-directed production volume in a given model year.

TABLE 3 OF § 1039.101—ALTERNATE FEL CAPS, G/KW-HR

Maximum engine power	Starting model year [1]	PM FEL cap	NO_X FEL cap
19 ≤ kW < 56	[2] 2016	0.30	
56 ≤ kW < 130	2016	[3] 0.30	[3] 3.8
130 ≤ kW ≤ 560	2015	0.20	3.8
kW > 560	2019	0.10	[4] 3.5

[1] See § 1039.104(g) for alternate FEL caps that apply in earlier model years.
[2] For manufacturers certifying engines under Option #1 of Table 3 of § 1039.102, these alternate FEL caps apply starting with the 2017 model year.
[3] For engines below 75 kW, the FEL caps are 0.40 g/kW-hr for PM emissions and 4.4 g/kW-hr for NO_X emissions.
[4] For engines above 560 kW, the provision for alternate NO_X FEL caps is limited to generator-set engines. For example, if you produce 1,000 generator-set engines above 560 kW in a given model year, up to 50 of them may be certified to the alternate NO_X FEL caps.

(e) *Not-to-exceed standards.* Exhaust emissions from your engines may not exceed the applicable not-to-exceed (NTE) standards in this paragraph (e).

(1) Measure emissions using the procedures described in subpart F of this part.

(2) Except as noted in paragraph (e)(7) of this section, the NTE standard, rounded to the same number of decimal places as the applicable standard in Table 1 of this section, is determined from the following equation:

$$\text{NTE standard for each pollutant} = (\text{STD}) \times (\text{M})$$

Where:

STD = The standard specified for that pollutant in Table 1 of this section (or paragraph (c) of this section) if you certify without using ABT for that pollutant; or the FEL for that pollutant if you certify using ABT.

M = The NTE multiplier for that pollutant, as defined in paragraph (e)(3) of this section.

(3) The NTE multiplier for each pollutant is 1.25, except in the following cases:

If . . .	Or . . .	Then . . .
(i) The engine family is certified to a NO_X standard less than 2.50 g/kW-hr without using ABT.	The engine family is certified to a NO_X FEL less than 2.50 g/kW-hr or a NO_X+NMHC FEL less than 2.70 g/kW-hr.	The multiplier for NO_X, NMHC, and NO_X+NMHC is 1.50.
(ii) The engine family is certified to a PM standard less than 0.07 g/kW-hr without using ABT.	The engine family is certified to a PM FEL less than 0.07 g/kW-hr.	The multiplier for PM is 1.50.

(4) There are two sets of specifications of ambient operating regions that will apply for all NTE testing of engines in an engine family. You must choose one set for each engine family and must identify your choice of ambient operating regions in each application for certification for an engine family. You may choose separately for each engine family. Choose one of the following ambient operating regions:

(i) All altitudes less than or equal to 5,500 feet above sea level during all ambient temperature and humidity conditions.

(ii) All altitudes less than or equal to 5,500 feet above sea level, for temperatures less than or equal to the temperature determined by the following equation at the specified altitude:

$$T = -0.00254 \times A + 100$$

Where:

T = ambient air temperature in degrees Fahrenheit.

A = altitude in feet above sea level (A is negative for altitudes below sea level).

(5) Temperature and humidity ranges for which correction factors are allowed are specified in 40 CFR 86.1370–2007(e).

(i) If you choose the ambient operating region specified in paragraph (e)(4)(i) of this section, the temperature and humidity ranges for which correction factors are allowed are defined in 40 CFR 86.1370–2007(e)(1).

(ii) If you choose the ambient operating region specified in paragraph (e)(4)(ii) of this section, the temperature and humidity ranges for which correction factors are allowed are defined in 40 CFR 86.1370–2007(e)(2).

(6) For engines equipped with exhaust-gas recirculation, the NTE standards of this section do not apply during the cold operating conditions specified in 40 CFR 86.1370–2007(f).

(7) For engines certified to a PM FEL less than or equal to 0.01 g/kW-hr, the PM NTE standard is 0.02 g/kW-hr.

(f) *Fuel types.* The exhaust emission standards in this section apply for engines using the fuel type on which the engines in the engine family are designed to operate, except for engines certified under § 1039.615. For engines certified under § 1039.615, the standards of this section apply to emissions measured using the specified test fuel. You must meet the numerical emission standards for NMHC in this section based on the following types of hydrocarbon emissions for engines powered by the following fuels:

(1) Alcohol-fueled engines: THCE emissions.

(2) Other engines: NMHC emissions.

(g) *Useful life.* Your engines must meet the exhaust emission standards in paragraphs (a) through (e) of this section over their full useful life.

(1) The useful life values are shown in the following table, except as allowed by paragraph (g)(2) of this section:

TABLE 4 OF § 1039.101—USEFUL LIFE VALUES

If your engine is certified as . . .	And its maximum power is . . .	And its rated speed is . . .	Then its useful life is . . .
(i) Variable speed or constant speed.	kW <19	Any Speed	3,000 hours or five years, whichever comes first.
(ii) Constant speed	19 ≤ kW <37	3,000 rpm or higher	3,000 hours or five years, whichever comes first.
(iii) Constant speed	19 ≤ kW <37	Less than 3,000 rpm	5,000 hours or seven years, whichever comes first.
(iv) Variable	19 ≤ kW <37	Any Speed	5,000 hours or seven years, whichever comes first.
(v) Variable speed or constant speed.	kW ≥37	Any speed	8,000 hours or ten years, whichever comes first.

(2) You may request in your application for certification that we approve a shorter useful life for an engine family. We may approve a shorter useful life, in hours of engine operation but not in years, if we determine that these engines will rarely operate longer than the shorter useful life. If engines identical to those in the engine family have already been produced and are in use, your demonstration must include documentation from such in-use engines. In

other cases, your demonstration must include an engineering analysis of information equivalent to such in-use data, such as data from research engines or similar engine models that are already in production. Your demonstration must also include any overhaul interval that you recommend, any mechanical warranty that you offer for the engine or its components, and any relevant customer design specifications. Your demonstration may include any other relevant information. The useful life value may not be shorter than any of the following:

(i) 1,000 hours of operation.

(ii) Your recommended overhaul interval.

(iii) Your mechanical warranty for the engine.

(h) *Applicability for testing*. The emission standards in this subpart apply to all testing, including certification, selective enforcement audits, and in-use testing. For selective enforcement audits, we will require you to perform duty-cycle testing as specified in §§ 1039.505 and 1039.510. The NTE standards of this section apply for those tests. We will not direct you to do additional testing under a selective enforcement audit to show that your engines meet the NTE standards.

[69 FR 39213, June 29, 2004, as amended at 70 FR 40462, July 13, 2005]

§ 1039.102 What exhaust emission standards and phase-in allowances apply for my engines in model year 2014 and earlier?

The exhaust emission standards of this section apply for 2014 and earlier model years. See § 1039.101 for exhaust emission standards that apply to later model years. See 40 CFR 89.112 for exhaust emission standards that apply to model years before the standards of this part 1039 take effect.

(a) *Emission standards for transient testing*. Transient exhaust emissions from your engines may not exceed the applicable emission standards in Tables 1 through 6 of this section. Measure emissions using the applicable transient test procedures described in subpart F of this part. See paragraph (c) of this section for a description of provisions related to the phase-in and phase-out standards shown in Tables 4 through 6 of this section. The emission standards for transient testing are limited for certain engines, as follows:

(1) The transient standards in this section do not apply for the following engines:

(i) Engines below 37 kW for model years before 2013.

(ii) Engines certified under Option #1 of Table 3 of this section. These are the small-volume manufacturer engines certified to the Option #1 standards for model years 2008 through 2015 under § 1039.104(c), and other engines certified to the Option #1 standards for model years 2008 through 2012.

(iii) Engines certified to an alternate FEL during the first four years of the Tier 4 standards for the applicable power category, as allowed in § 1039.104(g). However, you may certify these engines to the transient standards in this section to avoid using temporary compliance adjustment factors, as described in § 1039.104(g)(2). Note that in some cases this four-year period extends into the time covered by the standards in § 1039.101.

(iv) Constant-speed engines.

(v) Engines above 560 kW.

(2) The transient standards in this section for gaseous pollutants do not apply to phase-out engines that you certify to the same numerical standards (and FELs if the engines are certified using ABT) for gaseous pollutants as you certified under the Tier 3 requirements of 40 CFR part 89. However, except as specified by paragraph (a)(1) of this section, the transient PM emission standards apply to these engines.

(b) Emission standards for steady-state testing. Steady-state exhaust emissions from your engines may not exceed the applicable emission standards in Tables 1 through 7 of this section. Measure emissions using the applicable steady-state test procedures described in subpart F of this part. See paragraph (c) of this section for a description of provisions related to the phase-in and phase-out standards shown in Tables 4 through 6 of this section.

TABLE 1 OF § 1039.102—TIER 4 EXHAUST EMISSION STANDARDS (G/KW-HR): KW < 19

Maximum engine power	Model years	PM	NO_X + NMHC	CO
kW < 8	2008–2014	[1] 0.40	7.5	8.0
8 ≤ kW < 19	2008–2014	0.40	7.5	6.6

[1] For engines that qualify for the special provisions in § 1039.101(c), you may delay certifying to the standards in this part 1039 until 2010. In 2009 and earlier model years, these engines must instead meet the applicable Tier 2 standards and other requirements from 40 CFR part 89. Starting in 2010, these engines must meet a PM standard of 0.60 g/kW-hr, as described in § 1039.101(c). Engines certified to the 0.60 g/kWhr PM standard may not generate ABT credits.

TABLE 2 OF § 1039.102—INTERIM TIER 4 EXHAUST EMISSION STANDARDS (G/KW-HR): 19 ≤ KW < 37

Model years	PM	NO_X + NMHC	CO
2008–2012	0.30	7.5	5.5
2013–2014	0.03	4.7	5.5

TABLE 3 OF § 1039.102—INTERIM TIER 4 EXHAUST EMISSION STANDARDS (G/KW-HR): 37 ≤ KW < 56

Option [1]	Model years	PM	NO_X + NMHC	CO
#1	2008–2012	0.30	4.7	5.0
#2	2012	0.03	4.7	5.0
All	2013–2014	0.03	4.7	5.0

[1] You may certify engines to the Option #1 or Option #2 standards starting in the listed model year. Under Option #1, all engines at or above 37 kW and below 56 kW produced before the 2013 model year must meet the applicable Option #1 standards in this table. These engines are considered to be ''Option #1 engines.'' Under Option #2, all these engines produced before the 2012 model year must meet the applicable standards under 40 CFR part 89. Engines certified to the Option #2 standards in model year 2012 are considered to be ''Option #2 engines.''

TABLE 4 OF § 1039.102—INTERIM TIER 4 EXHAUST EMISSION STANDARDS (G/KW-HR): 56 ≤ KW < 75

Model years [1]	Phase-in option	PM	NO_X	NMHC	NO_X + NMHC	CO
2012–2013	Phase-in	0.02	0.40	0.19		5.0
	Phase-out	0.02			4.7	5.0
2014	All engines	0.02	0.40	0.19		5.0

[1] See paragraph (d)(2) of this section for provisions that allow for a different phase-in schedule than that specified in paragraph (c)(1) of this section.

TABLE 5 OF § 1039.102—INTERIM TIER 4 EXHAUST EMISSION STANDARDS (G/KW-HR): 75 ≤ KW < 130

Model years [1]	Phase-in option	PM	NO_X	NMHC	NO_X + NMHC	CO
2012–2013	Phase-in	0.02	0.40	0.19		5.0
	Phase-out	0.02			4.0	5.0
2014	All engines	0.02	0.40	0.19		5.0

[1] See paragraph (d)(2) of this section for provisions that allow for a different phase-in schedule than that specified in paragraph (c)(1) of this section.

TABLE 6 OF § 1039.102—INTERIM TIER 4 EXHAUST EMISSION STANDARDS (G/KW-HR): 130 ≤ KW < 560

Model years [1]	Phase-in option	PM	NO_X	NMHC	NO_X + NMHC	CO
2011–2013	Phase-in	0.02	0.40	0.19		3.5
	Phase-out	0.02			4.0	3.5
2014	All engines	0.02	0.40	0.19		3.5

TABLE 7 OF § 1039.102—INTERIM TIER 4 EXHAUST EMISSION STANDARDS (G/KW-HR): KW > 560

Model years	Maximum engine power	Application	PM	NO_X	NMHC	CO
2011–2014	560 < kW ≤ 900	All	0.10	3.5	0.40	3.5
	kW > 900	Generator sets	0.10	0.67	0.40	3.5
		All except generator sets	0.10	3.5	0.40	3.5

(c) *Phase-in requirements.* The following phase-in provisions apply for engines in 56–560 kW power categories meeting the interim Tier 4 standards in paragraphs (a) and (b) of this section:

(1) For each model year before 2014 noted in Tables 4 through 6 of this section, you must certify engine families representing at least 50 percent of your U.S.-directed production volume for each power category to the applicable phase-in standards, except as allowed by paragraph (c)(3), (d)(2), or (e) of this section. Any engines not certified to the phase-in standards must be certified to the corresponding phase-out standards.

(2) Engines certified to the phase-out standards in Tables 4 through 6 of this section must comply with all other requirements that apply to Tier 4 engines, except as otherwise specified in this section.

(3) At the time of certification, show how you intend to meet the phase-in requirements of this paragraph (c) based on projected U.S.-directed production volumes. If your actual U.S.-directed production volume fails to meet the phase-in requirements for a given model year, you must make up the shortfall (in terms of number of engines) by the end of the model year representing the final year of the phase-in period. For example, if you plan in good faith to produce 50 percent of a projected 10,000 engines in the 56–130 kW power category (*i.e.*, 5,000 engines) in 2012 in compliance with the Tier 4 phase-in standards for NO_X and NMHC in Table 4 of this section, but produce 4,500 such engines of an actual 10,000 engines, you must produce 500 engines in model year 2013 (*i.e.*, the final year of the phase-in for this power category) that meet the Tier 4 phase-in standards above and beyond the production otherwise needed to meet the 50-percent phase-in requirement for model year 2013. If any shortfall exceeds the applicable limit of paragraph (c)(3)(i) or (ii) of this section, that number of phase-out engines will be considered not covered by a certificate of conformity and in violation of § 1068.101(a)(1). The shortfall allowed by this paragraph (c)(3) may not exceed a certain number of engines, as follows:

(i) For engine families certified according to the alternate phase-in schedule described in paragraph (d)(2) of this section, for model years prior to the final year of the phase-in, 5 percent of your actual U.S.-directed production volume for that power category in that model year.

(ii) For all other engine families, for model years prior to the final year of the phase-in, 25 percent of your actual U.S.-directed production volume for that power category in that model year.

(iii) No shortfall is allowed in the final year of the phase-in.

(4) Engines you introduce into commerce beyond the limits described in paragraphs (c)(3) of this section will be considered not covered by a certificate of conformity and in violation of § 1068.101(a)(1).

(5) For the purposes of this part, the term ''phase-in'' means relating to a standard that is identified in this section as a phase-in standard and the term ''phase-out'' means relating to a standard that is identified in this section as a phase-out standard. For example, a 200–kW engine from the 2012 model year that is certified to the 4.0 g/kW-hr NO_X+NMHC standard in Table 6 of § 1039.102 is a phase-out engine.

(d) *Banked credits and alternate phase-in for 56–130 kW engines.* For engines in the 56–130 kW power category, you may use only one of the following additional provisions:

(1) For model years 2012 through 2014, you may use banked NO_X+NMHC credits from any Tier 2 engine at or above 37 kW certified under 40 CFR part 89 to

meet the NO_X phase-in standards or the NO_X+NMHC phase-out standards under paragraphs (b) and (c) of this section, subject to the additional ABT provisions in § 1039.740.

(2) Instead of meeting the phase-in requirements of paragraph (c)(1) of this section, you may certify engine families representing at least 25 percent of your U.S.-directed production volume for each model year from 2012 through 2014 to the applicable phase-in standards in Tables 4 and 5 of this section, except as allowed by paragraph (c)(3) or (e) of this section. Any engines not certified to the phase-in standards must be certified to the corresponding phase-out standards. Engines certified under this paragraph (d)(2) may generate NO_X emission credits only for averaging within the same power category during the same model year. For engines certified under this paragraph (d)(2), the 2014 model year may not extend beyond December 30, 2014.

(e) *Alternate NO_X standards.* For engines in 56–560 kW power categories during the phase-in of Tier 4 standards, you may certify engine families to the alternate NO_X or NO_X + NMHC standards in this paragraph (e) instead of the phase-in and phase-out NO_X and NO_X + NMHC standards described in Tables 4 through 6 of this section. Engines certified to an alternate NO_X standard under this section must be certified to an NMHC standard of 0.19 g/kW-hr. Do not include engine families certified under this paragraph (e) in determining whether you comply with the percentage phase-in requirements of paragraphs (c) and (d)(2) of this section. Except for the provisions for alternate FEL caps in § 1039.104(g), the NO_X and NO_X + NMHC standards and FEL caps under this paragraph (e) are as follows:

(1) For engines in the 56–130 kW power category, apply the following alternate NO_X standards and FEL caps:

(i) If you use the provisions of paragraph (d)(1) of this section, your alternate NO_X standard for any engine family in the 56–130 kW power category is 2.3 g/kW-hr for model years 2012 and 2013. Engines certified to this standard may not exceed a NO_X FEL cap of 3.0 g/kW-hr.

(ii) If you use the provisions of paragraph (d)(2) of this section, your alternate NO_X standard for any engine family in the 56–130 kW power category is 3.4 g/kW-hr for model years 2012 through 2014. Engines below 75 kW certified to this standard may not exceed a NO_X FEL cap of 4.4 g/kW-hr; engines at or above 75 kW certified to this standard may not exceed a NO_X FEL cap of 3.8 g/kW-hr.

(iii) If you do not use the provisions of paragraph (d) of this section, you may apply the alternate NO_X standard and the appropriate FEL cap from either paragraph (e)(1)(i) or (ii) of this section.

(2) For engines in the 130–560 kW power category, the alternate NO_X standard is 2.0 g/kW-hr for model years 2011 through 2013. Engines certified to this standard may not exceed a NO_X FEL cap of 2.7 g/kW-hr.

(3) You use NO_X + NMHC emission credits to certify an engine family to the alternate NO_X + NMHC standards in this paragraph (e)(3) instead of the otherwise applicable alternate NO_X and NMHC standards. Calculate the alternate NO_X + NMHC standard by adding 0.1 g/kW-hr to the numerical value of the applicable alternate NO_X standard of paragraph (e)(1) or (2) of this section. Engines certified to the NO_X + NMHC standards of this paragraph (e)(3) may not generate emission credits. The FEL caps for engine families certified under this paragraph (e)(3) are the previously applicable NO_X + NMHC standards of 40 CFR 89.112 (generally the Tier 3 standards).

(f) *Split families.* For generating or using credits for engines in 56–560 kW power categories during the phase-in of Tier 4 standards, you may split an engine family into two subfamilies (for example, one that uses credits and one that generates credits for the same pollutant).

(1) Identify any split engine families in your application for certification. Your engines must comply with all the standards and requirements applicable to Tier 4 engines, except as noted in this paragraph (f). You may calculate emission credits relative to different emission standards (*i.e.*, phase-in and phase-out standards) for different sets of engines within the engine family, but the engine family must be certified to a single set of standards and FELs.

To calculate NO_X+NMHC emission credits, add the NO_X FEL to the NMHC phase-in standard for comparison with the applicable NO_X+NMHC phase-out standard. Any engine family certified under this paragraph (f) must meet the applicable phase-in standard for NMHC. You may assign the number and configurations of engines within the respective subfamilies any time before the due date for the final report required in § 1039.730. Apply the same label to each engine in the family, including the NO_X FEL to which it is certified.

(2) For example, a 10,000-unit engine family in the 75–130 kW power category may be certified to meet the standards for PM, NMHC, and CO that apply to phase-in engines, with a 0.8 g/kW-hr FEL for NO_X. When compared to the phase-out NO_X+NMHC standard, this engine family would generate positive NO_X+NMHC emission credits. When compared to the phase-in NO_X standard, this engine family would generate negative NO_X emission credits. You could create a subfamily with 2,500 engines (one-quarter of the 10,000 engines) and identify them as phase-in engines. You would count these 2,500, with their negative NO_X credits, in determining compliance with the 50-percent phase-in requirement in paragraph (c)(1) of this section. You would calculate negative credits relative to the 0.40 g/kW-hr NO_X standard for these 2,500 engines. You would identify the other 7,500 engines in the family as phase-out engines and calculate positive credits relative to the 4.0 g/kW-hr NO_X+NMHC standard.

(g) *Other provisions.* The provisions of § 1039.101(d) through (h) apply with respect to the standards of this section, with the following exceptions and special provisions:

(1) *NTE standards.* Use the provisions of § 1039.101(e)(3) to calculate and apply the NTE standards, but base these calculated values on the applicable standards in this section or the applicable FEL, instead of the standards in Table 1 of § 1039.101. All other provisions of § 1039.101(e) apply under this paragraph (g)(1). The NTE standards do not apply for certain engines and certain pollutants, as follows:

(i) All engines below 37 kW for model years before 2013.

(ii) All engines certified under Option #1 of Table 3 of this section. These are small-volume manufacturer engines certified to the Option #1 standards for model years 2008 through 2015 under § 1039.104(c), and other engines certified to the Option #1 standards for model years 2008 through 2012.

(iii) All engines less than or equal to 560 kW that are certified to an FEL under the alternate FEL program during the first four years of the Tier 4 standards for the applicable power category, as described in § 1039.104(g). However, if you apply to meet transient emission standards for these engines under § 1039.102(a)(1)(iii), you must also meet the NTE standards in this paragraph (g)(1).

(iv) Gaseous pollutants for phase-out engines that you certify to the same numerical standards and FELs for gaseous pollutants to which you certified under the Tier 3 requirements of 40 CFR part 89. However, the NTE standards for PM apply to these engines.

(2) *Interim FEL caps.* As described in § 1039.101(d), you may participate in the ABT program in subpart H of this part by certifying engines to FELs for PM, NO_X, or NO_X+NMHC instead of the standards in Tables 1 through 7 of this section for the model years shown. The FEL caps listed in the following table apply instead of the FEL caps in § 1039.101(d)(1), except as allowed by § 1039.104(g):

TABLE 8 OF § 1039.102—INTERIM TIER 4 FEL CAPS, G/KW-HR

Maximum engine power	Phase-in option	Model years [1]	PM	NO_X	NO_X+NMHC
kW < 19		2008–2014	0.80		[2] 9.5
19 ≤ kW < 37		2008–2012	0.60		9.5
37 ≤ kW < 56		[3] 2008–2012	0.40		7.5
56 ≤ kW < 130	phase-in	2012–2013	0.04	0.80	
56 ≤ kW < 130	phase-out	2012–2013	0.04		[4] 6.6
130 ≤ kW ≤ 560	phase-in	2011–2013	0.04	0.80	
130 ≤ kW ≤ 560	phase-out	2011–2013	0.04		[5] 6.4

TABLE 8 OF § 1039.102—INTERIM TIER 4 FEL CAPS, G/KW-HR—Continued

Maximum engine power	Phase-in option	Model years [1]	PM	NO_X	NO_X+NMHC
kW > 560		2011–2014	0.20	6.2	

[1] For model years before 2015 where this table does not specify FEL caps, apply the FEL caps shown in § 1039.101.
[2] For engines below 8 kW, the FEL cap is 10.5 g/kW-hr for NO_X+NMHC emissions.
[3] For manufacturers certifying engines to the standards of this part 1039 in 2012 under Option #2 of Table 3 of § 1039.102, the FEL caps for 37–56 kW engines in the 19–56 kW category of Table 2 of § 1039.101 apply for model year 2012 and later; see 40 CFR part 89 for provisions that apply to earlier model years.
[4] For engines below 75 kW, the FEL cap is 7.5 g/kW-hr for NO_X+NMHC emissions.
[5] For engines below 225 kW, the FEL cap is 6.6 g/kW-hr for NO_X+NMHC emissions.

(3) *Crankcase emissions*. The crankcase emission requirements of § 1039.115(a) do not apply to engines using charge-air compression that are certified to an FEL under the alternate FEL program in § 1039.104(g) during the first four years of the Tier 4 standards for the applicable power category.

(4) *Special provisions for 37–56 kW engines*. For engines at or above 37 kW and below 56 kW from model years 2008 through 2012, you must add information to the emission-related installation instructions to clarify the equipment manufacturer's obligations under § 1039.104(f).

[69 FR 39213, June 29, 2004, as amended at 72 FR 53130, Sept. 18, 2007; 73 FR 59191, Oct. 8, 2008; 75 FR 68461, Nov. 8, 2010]

§ 1039.104 Are there interim provisions that apply only for a limited time?

The provisions in this section apply instead of other provisions in this part. This section describes when these interim provisions apply.

(a) *Incentives for early introduction*. This paragraph (a) allows you to reduce the number of engines subject to the applicable standards in § 1039.101 or § 1039.102, when some of your engines are certified to the specified levels earlier than otherwise required. The engines that are certified early are considered offset-generating engines. The provisions of this paragraph (a), which describe the requirements applicable to offset-generating engines, apply beginning in model year 2007. These offset generating engines may generate additional allowances for equipment manufacturers under the incentive program described in § 1039.627; you may instead use these offsets under paragraph (a)(2) of this section in some cases.

(1) For early-compliant engines to generate offsets for use either under this paragraph (a) or under § 1039.627, you must meet the following general provisions:

(i) You may not generate offsets from engines below 19 kW.

(ii) You must begin actual production of engines covered by the corresponding certificate by the following dates:

(A) For engines at or above 19 kW and below 37 kW: September 1, 2012.

(B) For engines at or above 37 kW and below 56 kW: September 1, 2012 if you choose Option #1 in Table 3 of § 1039.102, or September 1, 2011 if you do not choose Option #1 in Table 3 of § 1039.102.

(C) For engines in the 56–130 kW power category: September 1, 2011.

(D) For engines in the 130–560 kW power category: September 1, 2010.

(E) For engines above 560 kW: September 1, 2014.

(iii) Engines you produce after December 31 of the year shown in paragraph (a)(1)(ii) of this section may not generate offsets.

(iv) You may not use ABT credits to certify offset-generating engines.

(v) Offset-generating engines must be certified to the Tier 4 standards and requirements under this part 1039.

(2) If equipment manufacturers decline offsets for your offset-generating engines under § 1039.627, you may not generate ABT credits with these engines, but you may reduce the number of engines that are required to meet the standards in § 1039.101 or § 1039.102 as follows:

For every . . .	With maximum engine power . . .	That are certified to the applicable standards in . . .	You may reduce the number of engines in the same power category that are required to meet the . . .	In later model years by . . .
(i) 2 engines	19 ≤ kW < 37	Table 2 of § 1039.102 [1].	PM standard in Table 2 of § 1039.102 applicable to model year 2013 or 2014 engines or the PM standard in Table 1 of § 1039.101.	3 engines.
(ii) 2 engines	56 ≤ kW ≤ 560	Table 4, 5, or 6 of § 1039.102 for Phase-out engines.	Phase-out standards in Tables 4 through 6 of § 1039.102.	3 engines.
(iii) 2 engines	kW ≥ 19	Table 1 of § 1039.101	Standards in Tables 2 through 7 of § 1039.102 or standards in Table 1 of § 1039.101.	3 engines. [2]
(iv) 1 engine	kW ≥ 19	Table 1 of § 1039.101 + 0.20 g/kW-hr NO_X standard.	Standards in Tables 2 through 7 of § 1039.102 or standards in Table 1 of § 1039.101.	2 engines. [2]

[1] The engine must be certified to the PM standard applicable to model year 2013 engines, and to the NO_X+NMHC and CO standards applicable to model year 2012 engines.
[2] For engines above 560 kW, offsets from generator-set engines may be used only for generator-set engines. Offsets from engines for other applications may be used only for other applications besides generator sets.

(3) Example: If you produce 100 engines in the 56–130 kW power category in model year 2008 that are certified to the 56–130 kW standards listed in § 1039.101, and you produced 10,000 engines in this power category in model year 2015, then only 9,850 of these model year 2015 engines would need to comply with the standards listed in § 1039.101. The 100 offset-generating engines in model year 2008 could not use or generate ABT credits.

(4) Offset-using engines (that is, those not required to certify to the standards of § 1039.101 or § 1039.102 under paragraph (a)(2) of this section) are subject to the following provisions:

(i) If the offset is being used under paragraph (a)(2)(i) of this section for an engine that would otherwise be certified to the model year 2013 or 2014 standards in Table 2 of § 1039.102 or the standards in Table 1 of § 1039.101, this engine must be certified to the standards and requirements of this part 1039, except that the only PM standard that applies is the steady-state PM standard that applies for model year 2012. Such an engine may not generate ABT credits.

(ii) If the offset is being used under paragraph (a)(2)(ii) of this section for an engine that would otherwise be certified to the phase-out standards in Tables 4 through 6 of § 1039.102, this engine must be certified to the standards and requirements of this part 1039, except that the PM standard is the Tier 3 PM standard that applies for this engine's maximum power. Such an engine will be treated as a phase-out engine for purposes of determining compliance with percentage phase-in requirements. Such an engine may not generate ABT credits.

(iii) All other offset-using engines must meet the standards and other provisions that apply in model year 2011 for engines in the 19–130 kW power categories, in model year 2010 for engines in the 130–560 kW power category, or in model year 2014 for engines above 560 kW. Show that engines meet these emission standards by meeting all the requirements of § 1068.265. You must meet the labeling requirements in § 1039.135, but add the following statement instead of the compliance statement in § 1039.135(c)(12): ''THIS ENGINE MEETS U.S. EPA EMISSION STANDARDS UNDER 40 CFR 1039.104(a).'' For power categories with a percentage phase-in, these engines should be treated as phase-in engines for purposes of determining compliance with phase-in requirements.

(5) If an equipment manufacturer claims offsets from your engine for use under § 1039.627, the engine generating the offset must comply with the requirements of paragraph (a)(1) of this section. You may not generate offsets for use under paragraphs (a)(2) and (5) of this section for these engines. You may generate ABT credits from these engines as follows:

(i) To generate emission credits for NO_X, NO_X+NMHC, and PM, the engine must be certified to FELs at or below

the standards in paragraph (a)(2) of this section.

(ii) Calculate credits according to § 1039.705 but use as the applicable standard the numerical value of the standard to which the engine would have otherwise been subject if it had not been certified under this paragraph (a).

(iii) For the production volume, use the number of engines certified under this paragraph (a) for which you do not claim offsets under paragraph (a)(2) of this section.

(6) You may include engines used to generate offsets under this paragraph (a) and engines used to generate offsets under § 1039.627 in the same engine family, subject to the provisions of § 1039.230. The engine must be certified to FELs, as specified in paragraph (a)(5)(i) of this section. The FELs must be below the standard levels specified in paragraph (a)(2) of this section and those specified in § 1039.627. In the reports required in § 1039.730, include the following information for each model year:

(i) The total number of engines that generate offsets under this paragraph (a).

(ii) The number of engines used to generate offsets under paragraph (a)(2) of this section.

(iii) The names of equipment manufacturers that intend to use your offsets under § 1039.627 and the number of offsets involved for each equipment manufacturer.

(b) *In-use compliance limits*. For purposes of determining compliance after title or custody has transferred to the ultimate purchaser, calculate the applicable in-use compliance limits by adjusting the applicable standards or FELs. This applies only for engines at or above 19 kW. The NO_X adjustment applies only for engines with a NO_X FEL no higher than 2.1 g/kW-hr The PM adjustment applies only for engines with a PM FEL no higher than the PM standard in § 1039.101 for the appropriate power category. Add the following adjustments to the otherwise applicable standards or FELs (steady-state, transient, and NTE) for NO_X and PM:

In model years . . .	If your engine's maximum power is . . .	The NO_X adjustment in g/kW-hr is . . .	The PM adjustment in g/kW-hr is . . .
2013–2014	19 ≤ kW < 56	not allowed	0.01
2012–2016	56 ≤ kW < 130	0.16 for operating hours ≤ 2000	0.01
		0.25 for operating hours 2001 to 3400	
		0.34 for operating hours > 3400	
2011–2015	130 ≤ kW < 560	0.16 for operating hours ≤ 2000	0.01
		0.25 for operating hours 2001 to 3400	
		0.34 for operating hours > 3400	
2011–2016	kW > 560	0.16 for operating hours ≤ 2000	0.01
		0.25 for operating hours 2001 to 3400	
		0.34 for operating hours > 3400	

(c) *Provisions for small-volume manufacturers*. Special provisions apply if you are a small-volume engine manufacturer subject to the requirements of this part. You must notify us in writing before January 1, 2008 if you intend to use these provisions.

(1) You may delay complying with certain otherwise applicable Tier 4 emission standards and requirements as described in the following table:

If your engine's maximum power is . . .	You may delay meeting . . .	Until model year . . .	Before that model year the engine must comply with . . .
kW < 19	The standards and requirements of this part	2011	The standards and requirements in 40 CFR part 89.
19 ≤ kW < 37	The Tier 4 standards and requirements of this part that would otherwise be applicable in model year 2013.	2016	The Tier 4 standards and requirements that apply for model year 2008.
37 ≤ kW < 56	See paragraph (c)(2) of this section for special provisions that apply for engines in this power category.		

If your engine's maximum power is . . .	You may delay meeting . . .	Until model year . . .	Before that model year the engine must comply with . . .
56 ≤ kW < 130	The standards and requirements of this part	2015	The standards and requirements in 40 CFR part 89.

(2) To use the provisions of this paragraph (c) for engines at or above 37 kW and below 56 kW, choose one of the following:

(i) If you comply with the 0.30 g/kW-hr PM standard in §1039.102 in all model years from 2008 through 2012 without using PM credits, you may continue meeting that standard through 2015.

(ii) If you do not choose to comply with paragraph (c)(2)(i) of this section, you may continue to comply with the standards and requirements in 40 CFR part 89 for model years through 2012, but you must begin complying in 2013 with Tier 4 standards and requirements specified in Table 3 of §1039.102 for model years 2013 and later.

(3) After the delays indicated in paragraph (c)(1) and (2) of this section, you must comply with the same Tier 4 standards and requirements as all other manufacturers.

(4) For engines not in the 19–56 kW power category, if you delay compliance with any standards under this paragraph (c), you must do all the following things for the model years when you are delaying compliance with the otherwise applicable standards:

(i) Produce engines that meet all the emission standards and other requirements under 40 CFR part 89 applicable for that model year, except as noted in this paragraph (c).

(ii) Meet the labeling requirements in 40 CFR 89.110, but use the following compliance statement instead of the compliance statement in 40 CFR 89.110(b)(10): ''THIS ENGINE COMPLIES WITH U.S. EPA REGULATIONS FOR [CURRENT MODEL YEAR] NONROAD COMPRESSION-IGNITION ENGINES UNDER 40 CFR 1039.104(c).''.

(iii) Notify the equipment manufacturer that the engines you produce under this section are excluded from the production volumes associated with the equipment-manufacturer allowance program in §1039.625.

(5) For engines in the 19–56 kW power category, if you delay compliance with any standards under this paragraph (c), you must do all the following things for the model years when you are delaying compliance with the otherwise applicable standards:

(i) Produce engines in those model years that meet all the emission standards and other requirements that applied for your model year 2008 engines in the same power category.

(ii) Meet the labeling requirements in §1039.135, but use the following compliance statement instead of the compliance statement in §1039.135: ''THIS ENGINE COMPLIES WITH U.S. EPA REGULATIONS FOR [CURRENT MODEL YEAR] NONROAD COMPRESSION-IGNITION ENGINES UNDER 40 CFR 1039.104(c).''.

(iii) Notify the equipment manufacturer that the engines you produce under this section are excluded from the production volumes associated with the equipment-manufacturer allowance program in §1039.625.

(6) The provisions of this paragraph (c) may not be used to circumvent the requirements of this part.

(d) *Deficiencies for NTE standards*. You may ask us to accept as compliant an engine that does not fully meet specific requirements under the applicable NTE standards. Such deficiencies are intended to allow for minor deviations from the NTE standards under limited conditions. We expect your engines to have functioning emission-control hardware that allows you to comply with the NTE standards.

(1) Request our approval for specific deficiencies in your application for certification, or before you submit your application. We will not approve deficiencies retroactively to cover engines already certified. In your request, identify the scope of each deficiency and describe any auxiliary emission-control devices you will use to control emissions to the lowest practical level, considering the deficiency you are requesting.

(2) We will approve a deficiency only if compliance would be infeasible or

unreasonable considering such factors as the technical feasibility of the given hardware and the applicable lead time and production cycles—including schedules related to phase-in or phase-out of engines. We may consider other relevant factors.

(3) Our approval applies only for a single model year and may be limited to specific engine configurations. We may approve your request for the same deficiency in the following model year if correcting the deficiency would require unreasonable hardware or software modifications and we determine that you have demonstrated an acceptable level of effort toward complying.

(4) You may ask for any number of deficiencies in the first three model years during which NTE standards apply for your engines. For the next four model years, we may approve up to three deficiencies per engine family. Deficiencies of the same type that apply similarly to different power ratings within a family count as one deficiency per family. We may condition approval of any such additional deficiencies during these four years on any additional conditions we determine to be appropriate. We will not approve deficiencies after the seven-year period specified in this paragraph (d)(4).

(e) *Diesel test fuels and corresponding labeling requirements.* For diesel-fueled engines in 2011 and later model years, the diesel test fuel is ultra low-sulfur diesel fuel specified in 40 CFR part 1065. For diesel-fueled engines in 2010 and earlier model years, use test fuels and meet labeling requirements as follows:

(1) Use the following test fuels in 2010 and earlier model years:

(i) Unless otherwise specified, the diesel test fuel is low-sulfur diesel fuel specified in 40 CFR part 1065.

(ii) In model years 2007 through 2010, you may use ultra low-sulfur diesel fuel as the test fuel for any engine family that employs sulfur-sensitive technology if you can demonstrate that in-use engines in the family will use diesel fuel with a sulfur concentration no greater than 15 ppm.

(iii) You may use ultra low-sulfur diesel fuel as the test fuel for engine families in any power category below 56 kW, as long as none of the engines in your engine family employ sulfur-sensitive technologies, you ensure that ultimate purchasers of equipment using these engines are informed that ultra low-sulfur diesel fuel is recommended, and you recommend to equipment manufacturers that a label be applied at the fuel inlet recommending 15 ppm fuel.

(iv) For the engines described in §1039.101(c) that are certified to the 0.60 g/kW-hr PM standard in Table 1 of §1039.102 in the 2010 model year, you may test with the ultra low-sulfur fuel specified in 40 CFR part 1065.

(2) Meet the labeling requirements of this paragraph (e)(2) (or other labeling requirements we approve) to identify the applicable test fuels specified in paragraph (e)(1) of this section. Provide instructions to equipment manufacturers to ensure that they are aware of these labeling requirements.

(i) For engines certified under the provisions of paragraph (e)(1)(i) of this section, include the following statement on the emission control information label and the fuel-inlet label specified in §1039.135: ''LOW SULFUR FUEL OR ULTRA LOW SULFUR FUEL ONLY''.

(ii) For engines certified under the provisions of paragraph (e)(1)(ii) of this section, include the following statement on the emission control information label and the fuel-inlet label specified in §1039.135: ''ULTRA LOW SULFUR FUEL ONLY''.

(iii) For engines certified under the provisions of paragraph (e)(1)(iii) of this section, include the following statement on the emission control information label specified in §1039.135: ''ULTRA LOW SULFUR FUEL RECOMMENDED''.

(3) For model years 2010 and earlier, we will use the test fuel that you use under paragraph (e)(1) of this section, subject to the conditions of paragraph (e)(1) of this section.

(f) *Requirements for equipment manufacturers.* If you produce equipment with engines certified to Tier 3 standards under Option #2 of Table 3 of §1039.102 during model years from 2008 through 2011, then a minimum number of pieces of equipment you produce using 2012 model year engines must have engines certified to the Option #2 standards, as follows:

(1) For equipment you produce with 2012 model year engines at or above 37 kW and below 56 kW, determine the minimum number of these engines that must be certified to the Option #2 standards in Table 3 of § 1039.102 as follows:

(i) If all the equipment you produce using 2008 through 2011 model year engines use engines certified to Tier 3 standards under Option #2 of Table 3 of § 1039.102, then all the 2012 model year engines you install must be certified to the Option #2 standards of Table 3 of § 1039.102.

(ii) If you produce equipment using 2008 through 2011 model year engines with some engines certified to Option #1 standards of Table 3 of § 1039.102 and some engines certified to Tier 3 standards under Option #2 standards of Table 3 of § 1039.102, calculate the minimum number of 2012 model year engines you must install that are certified to the Option #2 standards of Table 3 of § 1039.102 from the following equation:

$$\text{Minimum number} = [(T\text{-}O_1 - F)/(T - F) - 0.05] \times P$$

Where:

T = The total number of 2008–2010 model year engines at or above 37 kW and below 56 kW that you use in equipment you produce.

O_1 = The number of engines from the 2008–2010 model years certified under Option #1 of Table 3 of § 1039.102 that you use in equipment you produce.

F = The number of 2008–2010 model year engines at or above 37 kW and below 56 kW that you use in equipment you produce under the flexibility provisions of § 1039.625.

P = The total number of 2012 model year engines at or above 37 kW and below 56 kW that you use in equipment you produce.

(2) As needed for the calculation required by this paragraph (f), keep records of all equipment you produce using 2008–2012 model year engines at or above 37 kW and below 56 kW. If you fail to keep these records, you may not use any 2012 model year engines certified to Option #1 standards in your equipment.

(3) If you fail to comply with the provisions of this paragraph (f), then using 2012 model year engines certified under Option #1 of Table 3 of § 1039.102 (or certified to less stringent standards) in such equipment violates the prohibitions in § 1068.101(a)(1).

(g) *Alternate FEL caps.* You may certify a limited number of engines from your U.S.-directed production volume to the FEL caps in Table 1 of this section instead of the otherwise applicable FEL caps in § 1039.101(d)(1), § 1039.102(e), or § 1039.102(g)(2), subject to the following provisions:

(1) The provisions of this paragraph (g) apply during the model years shown in Table 1 of this section. During this period, the number of engines certified to the FEL caps in Table 1 of this section must not exceed 20 percent in any single model year in each power category. The sum of percentages over the four-year period must not exceed a total of 40 percent in each power category. If you certify an engine under an alternate FEL cap in this paragraph (g) for any pollutant, count it toward the allowed percentage of engines certified to the alternate FEL caps.

(2) If your engine is not certified to transient emission standards under the provisions of § 1039.102(a)(1)(iii), you must adjust your FEL upward by a temporary compliance adjustment factor (TCAF) before calculating your negative emission credits under § 1039.705, as follows:

(i) The temporary compliance adjustment factor for NO_X is 1.1.

(ii) The temporary compliance adjustment factor for PM is 1.5.

(iii) The adjusted FEL (FEL_{adj}) for calculating emission credits is determined from the steady-state FEL (FEL_{ss}) using the following equation:

$$FEL_{adj} = (FEL_{ss}) \times (TCAF)$$

(iv) The unadjusted FEL (FEL_{ss}) applies for all purposes other than credit calculation.

(3) These alternate FEL caps may not be used for phase-in engines.

(4) Do not apply TCAFs to gaseous emissions for phase-out engines that you certify to the same numerical standards (and FELs if the engines are certified using ABT) for gaseous pollutants as you certified under the Tier 3 requirements of 40 CFR part 89.

TABLE 1 OF § 1039.104—ALTERNATE FEL CAPS

Maximum engine power	PM FEL cap, g/kW-hr	Model years for the alternate PM FEL cap	NO_X FEL cap, g/kW-hr	Model years for the alternate NO_X FEL cap
19 ≤ kW < 56	0.30	[1] 2012–2015	.....	.....
56 ≤ kW < 130 [2]	0.30	2012–2015	3.8	[3] 2012–2015
130 ≤ kW ≤ 560	0.20	2011–2014	3.8	[4] 2011–2014
kW > 560 [5]	0.10	2015–2018	3.5	2015–2018

[1] For manufacturers certifying engines under Option #1 of Table 3 of § 1039.102, these alternate FEL caps apply to all 19–56 kW engines for model years from 2013 through 2016 instead of in the years indicated in this table. For manufacturers certifying engines under Option #2 of Table 3 of § 1039.102, these alternate FEL caps do not apply to 19–37 kW engines except in model years 2013 to 2015.

[2] For engines below 75 kW, the FEL caps are 0.40 g/kW-hr for PM emissions and 4.4 g/kW-hr for NO_X emissions.

[3] For manufacturers certifying engines in this power category using a percentage phase-in/phase-out approach instead of the alternate NO_X standards of § 1039.102(e)(1), the alternate NO_X FEL cap in the table applies only in the 2014–2015 model years if certifying under § 1039.102(d)(1), and only in the 2015 model year if certifying under (1039.102(d)(2).

[4] For manufacturers certifying engines in this power category using the percentage phase-in/phase-out approach instead of the alternate NO_X standard of § 1039.102(e)(2), the alternate NO_X FEL cap in the table applies only for the 2014 model year.

[5] For engines above 560 kW, the provision for alternate NO_X FEL caps is limited to generator-set engines. For example, if you produce 1,000 generator-set engines above 560 kW in 2015, up to 200 of them may be certified to the alternate NO_X FEL caps.

(5) You may certify engines under this paragraph (g) without regard to whether or not the engine family's FEL is at or below the otherwise applicable FEL cap. For example, a 200 kW engine certified to the NO_X + NMHC standard of § 1039.102(e)(3) with an FEL equal to the FEL cap of 2.8 g/kW-hr may be certified under this paragraph (g) and count toward the sales limit specified in paragraph (g)(1) of this section.

(h) *Delayed compliance with labeling requirements*. Before the 2011 model year, you may omit the dates of manufacture from the emission control information label as specified in § 1039.135(c)(6) if you keep those records and provide them to us upon request.

[69 FR 39213, June 29, 2004, as amended at 70 FR 40462, July 13, 2005; 72 FR 53130, Sept. 18, 2007; 75 FR 22988, Apr. 30, 2010; 75 FR 68461, Nov. 8, 2010]

§ 1039.105 What smoke standards must my engines meet?

(a) The smoke standards in this section apply to all engines subject to emission standards under this part, except for the following engines:

(1) Single-cylinder engines.

(2) Constant-speed engines.

(3) Engines certified to a PM emission standard or FEL of 0.07 g/kW-hr or lower.

(b) Measure smoke as specified in § 1039.501(c). Smoke from your engines may not exceed the following standards:

(1) 20 percent during the acceleration mode.

(2) 15 percent during the lugging mode.

(3) 50 percent during the peaks in either the acceleration or lugging modes.

§ 1039.107 What evaporative emission standards and requirements apply?

There are no evaporative emission standards for diesel-fueled engines, or engines using other nonvolatile or nonliquid fuels (for example, natural gas). If your engine uses a volatile liquid fuel, such as methanol, you must meet the evaporative emission requirements of 40 CFR part 1048 that apply to spark-ignition engines, as follows:

(a) Follow the steps in 40 CFR 1048.245 to show that you meet the requirements of 40 CFR 1048.105.

(b) Do the following things in your application for certification:

(1) Describe how your engines control evaporative emissions.

(2) Present test data to show that equipment using your engines meets the evaporative emission standards we specify in this section if you do not use design-based certification under 40 CFR 1048.245. Show these figures before and after applying deterioration factors, where applicable.

§ 1039.110 [Reserved]

§ 1039.115 What other requirements apply?

Engines that are required to meet the emission standards of this part

must meet the following requirements, except as noted elsewhere in this part:

(a) *Crankcase emissions.* Crankcase emissions may not be discharged directly into the ambient atmosphere from any engine throughout its useful life, except as follows:

(1) Engines may discharge crankcase emissions to the ambient atmosphere if the emissions are added to the exhaust emissions (either physically or mathematically) during all emission testing.

(2) If you take advantage of this exception, you must do the following things:

(i) Manufacture the engines so that all crankcase emissions can be routed into the applicable sampling systems specified in 40 CFR part 1065.

(ii) Account for deterioration in crankcase emissions when determining exhaust deterioration factors.

(3) For purposes of this paragraph (a), crankcase emissions that are routed to the exhaust upstream of exhaust aftertreatment during all operation are not considered to be discharged directly into the ambient atmosphere.

(b)–(d) [Reserved]

(e) *Adjustable parameters.* Engines that have adjustable parameters must meet all the requirements of this part for any adjustment in the physically adjustable range. An operating parameter is not considered adjustable if you permanently seal it or if it is not normally accessible using ordinary tools. We may require that you set adjustable parameters to any specification within the adjustable range during any testing, including certification testing, selective enforcement auditing, or in-use testing.

(f) *Prohibited controls.* You may not design your engines with emission-control devices, systems, or elements of design that cause or contribute to an unreasonable risk to public health, welfare, or safety while operating. For example, this would apply if the engine emits a noxious or toxic substance it would otherwise not emit that contributes to such an unreasonable risk.

(g) *Defeat devices.* You may not equip your engines with a defeat device. A defeat device is an auxiliary emission-control device that reduces the effectiveness of emission controls under conditions that the engine may reasonably be expected to encounter during normal operation and use. This does not apply to auxiliary-emission control devices you identify in your certification application if any of the following is true:

(1) The conditions of concern were substantially included in the applicable test procedures described in subpart F of this part.

(2) You show your design is necessary to prevent engine (or equipment) damage or accidents.

(3) The reduced effectiveness applies only to starting the engine.

[69 FR 39213, June 29, 2004, as amended at 72 FR 53130, Sept. 18, 2007]

§ 1039.120 What emission-related warranty requirements apply to me?

(a) *General requirements.* You must warrant to the ultimate purchaser and each subsequent purchaser that the new nonroad engine, including all parts of its emission-control system, meets two conditions:

(1) It is designed, built, and equipped so it conforms at the time of sale to the ultimate purchaser with the requirements of this part.

(2) It is free from defects in materials and workmanship that may keep it from meeting these requirements.

(b) *Warranty period.* Your emission-related warranty must be valid for at least as long as the minimum warranty periods listed in this paragraph (b) in hours of operation and years, whichever comes first. You may offer an emission-related warranty more generous than we require. The emission-related warranty for the engine may not be shorter than any published warranty you offer without charge for the engine. Similarly, the emission-related warranty for any component may not be shorter than any published warranty you offer without charge for that component. If an engine has no hour meter, we base the warranty periods in this paragraph (b) only on the engine's age (in years). The warranty period begins when the engine is placed into service. The minimum warranty periods are shown in the following table:

If your engine is certified as . . .	And its maximum power is . . .	And its rated speed is . . .	Then its warranty period is . . .
Variable speed or constant speed.	kW < 19	Any speed	1,500 hours or two years, whichever comes first.
Constant speed	19 ≤ kW < 37	3,000 rpm or higher	1,500 hours or two years, whichever comes first.
Constant speed	19 ≤ kW < 37	Less than 3,000 rpm	3,000 hours or five years, whichever comes first.
Variable speed	19 ≤ kW < 37	Any speed	3,000 hours or five years, whichever comes first.
Variable speed or constant speed.	kW ≥ 37	Any speed	3,000 hours or five years, whichever comes first.

(c) *Components covered.* The emission-related warranty covers all components whose failure would increase an engine's emissions of any regulated pollutant, including components listed in 40 CFR part 1068, Appendix I, and components from any other system you develop to control emissions. The emission-related warranty covers these components even if another company produces the component. Your emission-related warranty does not need to cover components whose failure would not increase an engine's emissions of any regulated pollutant.

(d) *Limited applicability.* You may deny warranty claims under this section if the operator caused the problem through improper maintenance or use, as described in 40 CFR 1068.115.

(e) *Owners manual.* Describe in the owners manual the emission-related warranty provisions from this section that apply to the engine.

[69 FR 39213, June 29, 2004, as amended at 70 FR 40463, July 13, 2005; 75 FR 22989, Apr. 30, 2010]

§ 1039.125 What maintenance instructions must I give to buyers?

Give the ultimate purchaser of each new nonroad engine written instructions for properly maintaining and using the engine, including the emission-control system. The maintenance instructions also apply to service accumulation on your emission-data engines, as described in § 1039.245 and in 40 CFR part 1065.

(a) *Critical emission-related maintenance.* Critical emission-related maintenance includes any adjustment, cleaning, repair, or replacement of critical emission-related components. This may also include additional emission-related maintenance that you determine is critical if we approve it in advance. You may schedule critical emission-related maintenance on these components if you meet the following conditions:

(1) You demonstrate that the maintenance is reasonably likely to be done at the recommended intervals on in-use engines. We will accept scheduled maintenance as reasonably likely to occur if you satisfy any of the following conditions:

(i) You present data showing that, if a lack of maintenance increases emissions, it also unacceptably degrades the engine's performance.

(ii) You present survey data showing that at least 80 percent of engines in the field get the maintenance you specify at the recommended intervals.

(iii) You provide the maintenance free of charge and clearly say so in your maintenance instructions.

(iv) You otherwise show us that the maintenance is reasonably likely to be done at the recommended intervals.

(2) For engines below 130 kW, you may not schedule critical emission-related maintenance more frequently than the following minimum intervals, except as specified in paragraphs (a)(4), (b), and (c) of this section:

(i) For EGR-related filters and coolers, PCV valves, crankcase vent filters, and fuel injector tips (cleaning only), the minimum interval is 1,500 hours.

(ii) For the following components, including associated sensors and actuators, the minimum interval is 3,000 hours: Fuel injectors, turbochargers, catalytic converters, electronic control units, EGR systems (including related components, but excluding filters and coolers), and other add-on components.

(3) For engines at or above 130 kW, you may not schedule critical emission-related maintenance more frequently than the following minimum intervals, except as specified in paragraphs (a)(4), (b), and (c) of this section:

(i) For EGR-related filters and coolers, PCV valves, crankcase vent filters, and fuel injector tips (cleaning only), the minimum interval is 1,500 hours.

(ii) For the following components, including associated sensors and actuators, the minimum interval is 4,500 hours: Fuel injectors, turbochargers, catalytic converters, electronic control units, EGR systems (including related components, but excluding filters and coolers), and other add-on components.

(4) For particulate traps, trap oxidizers, and components related to either of these, scheduled maintenance may include cleaning or repair at the intervals specified in paragraph (a)(2) or (3) of this section, as applicable. Scheduled maintenance may include a shorter interval for cleaning or repair and may also include adjustment or replacement, but only if we approve it. We will approve your request if you provide the maintenance free of charge and clearly state this in your maintenance instructions, and you provide us additional information as needed to convince us that the maintenance will occur.

(5) You may ask us to approve a maintenance interval shorter than that specified in paragraphs (a)(2) and (3) of this section under §1039.210, including emission-related components that were not in widespread use with nonroad compression-ignition engines before 2011. In your request you must describe the proposed maintenance step, recommend the maximum feasible interval for this maintenance, include your rationale with supporting evidence to support the need for the maintenance at the recommended interval, and demonstrate that the maintenance will be done at the recommended interval on in-use engines. In considering your request, we will evaluate the information you provide and any other available information to establish alternate specifications for maintenance intervals, if appropriate. We will announce any decision we make under this paragraph (a)(5) in the FEDERAL REGISTER. Anyone may request a hearing regarding such a decision (*see* §1039.820).

(6) If your engine family has an alternate useful life under §1039.101(g) that is shorter than the period specified in paragraph (a)(2) or (a)(3) of this section, you may not schedule critical emission-related maintenance more frequently than the alternate useful life, except as specified in paragraph (c) of this section.

(b) *Recommended additional maintenance.* You may recommend any additional amount of maintenance on the components listed in paragraph (a) of this section, as long as you state clearly that these maintenance steps are not necessary to keep the emission-related warranty valid. If operators do the maintenance specified in paragraph (a) of this section, but not the recommended additional maintenance, this does not allow you to disqualify those engines from in-use testing or deny a warranty claim. Do not take these maintenance steps during service accumulation on your emission-data engines.

(c) *Special maintenance.* You may specify more frequent maintenance to address problems related to special situations, such as atypical engine operation. You must clearly state that this additional maintenance is associated with the special situation you are addressing. We may disapprove your maintenance instructions if we determine that you have specified special maintenance steps to address engine operation that is not atypical, or that the maintenance is unlikely to occur in use. If we determine that certain maintenance items do not qualify as special maintenance under this paragraph (c), you may identify this as recommended additional maintenance under paragraph (b) of this section.

(d) *Noncritical emission-related maintenance.* Subject to the provisions of this paragraph (d), you may schedule any amount of emission-related inspection or maintenance that is not covered by paragraph (a) of this section (that is, maintenance that is neither explicitly identified as critical emission-related maintenance, nor that we approve as critical emission-related maintenance).

Noncritical emission-related maintenance generally includes maintenance on the components we specify in 40 CFR part 1068, Appendix I, that is not covered in paragraph (a) of this section. You must state in the owners manual that these steps are not necessary to keep the emission-related warranty valid. If operators fail to do this maintenance, this does not allow you to disqualify those engines from in-use testing or deny a warranty claim. Do not take these inspection or maintenance steps during service accumulation on your emission-data engines.

(e) *Maintenance that is not emission-related.* For maintenance unrelated to emission controls, you may schedule any amount of inspection or maintenance. You may also take these inspection or maintenance steps during service accumulation on your emission-data engines, as long as they are reasonable and technologically necessary. This might include adding engine oil, changing air, fuel, or oil filters, servicing engine-cooling systems, and adjusting idle speed, governor, engine bolt torque, valve lash, or injector lash. You may perform this nonemission-related maintenance on emission-data engines at the least frequent intervals that you recommend to the ultimate purchaser (but not the intervals recommended for severe service).

(f) *Source of parts and repairs.* State clearly on the first page of your written maintenance instructions that a repair shop or person of the owner's choosing may maintain, replace, or repair emission-control devices and systems. Your instructions may not require components or service identified by brand, trade, or corporate name. Also, do not directly or indirectly condition your warranty on a requirement that the engine be serviced by your franchised dealers or any other service establishments with which you have a commercial relationship. You may disregard the requirements in this paragraph (f) if you do one of two things:

(1) Provide a component or service without charge under the purchase agreement.

(2) Get us to waive this prohibition in the public's interest by convincing us the engine will work properly only with the identified component or service.

(g) *Payment for scheduled maintenance.* Owners are responsible for properly maintaining their engines. This generally includes paying for scheduled maintenance. However, manufacturers must pay for scheduled maintenance during the useful life if the regulations require it or if it meets all the following criteria:

(1) Each affected component was not in general use on similar engines before the applicable dates shown in paragraph (6) of the definition of *new nonroad engine* in § 1039.801.

(2) The primary function of each affected component is to reduce emissions.

(3) The cost of the scheduled maintenance is more than 2 percent of the price of the engine.

(4) Failure to perform the maintenance would not cause clear problems that would significantly degrade the engine's performance.

(h) *Owners manual.* Explain the owner's responsibility for proper maintenance in the owners manual.

[69 FR 39213, June 29, 2004, as amended at 70 FR 40463, July 13, 2005; 72 FR 53130, Sept. 18, 2007; 73 FR 59191, Oct. 8, 2008; 75 FR 22989, Apr. 30, 2010]

§ 1039.130 What installation instructions must I give to equipment manufacturers?

(a) If you sell an engine for someone else to install in a piece of nonroad equipment, give the engine installer instructions for installing it consistent with the requirements of this part. Include all information necessary to ensure that an engine will be installed in its certified configuration.

(b) Make sure these instructions have the following information:

(1) Include the heading: ''Emission-related installation instructions''.

(2) State: ''Failing to follow these instructions when installing a certified engine in a piece of nonroad equipment violates federal law (40 CFR 1068.105(b)), subject to fines or other penalties as described in the Clean Air Act.''.

(3) Describe the instructions needed to properly install the exhaust system

and any other components. Include instructions consistent with the requirements of § 1039.205(u).

(4) [Reserved]

(5) Describe any limits on the range of applications needed to ensure that the engine operates consistently with your application for certification. For example, if your engines are certified only for constant-speed operation, tell equipment manufacturers not to install the engines in variable-speed applications.

(6) Describe any other instructions to make sure the installed engine will operate according to design specifications in your application for certification. This may include, for example, instructions for installing aftertreatment devices when installing the engines.

(7) State: ''If you install the engine in a way that makes the engine's emission control information label hard to read during normal engine maintenance, you must place a duplicate label on the equipment, as described in 40 CFR 1068.105.''.

(8) Describe equipment-labeling requirements consistent with § 1039.135. State whether you are providing the label for the fuel inlet or the equipment manufacturer must provide the label.

(c) You do not need installation instructions for engines you install in your own equipment.

(d) Provide instructions in writing or in an equivalent format. For example, you may post instructions on a publicly available website for downloading or printing. If you do not provide the instructions in writing, explain in your application for certification how you will ensure that each installer is informed of the installation requirements.

[69 FR 39213, June 29, 2004, as amended at 70 FR 40463, July 13, 2005]

§ 1039.135 How must I label and identify the engines I produce?

(a) Assign each engine a unique identification number and permanently affix, engrave, or stamp it on the engine in a legible way.

(b) At the time of manufacture, affix a permanent and legible label identifying each engine. The label must be—

(1) Attached in one piece so it is not removable without being destroyed or defaced. However, you may use two-piece labels for engines below 19 kW if there is not enough space on the engine to apply a one-piece label.

(2) Secured to a part of the engine needed for normal operation and not normally requiring replacement.

(3) Durable and readable for the engine's entire life.

(4) Written in English.

(c) The label must—

(1) Include the heading ''EMISSION CONTROL INFORMATION''.

(2) Include your full corporate name and trademark. You may identify another company and use its trademark instead of yours if you comply with the provisions of § 1039.640.

(3) Include EPA's standardized designation for the engine family (and subfamily, where applicable).

(4) State the power category or subcategory from § 1039.101 or § 1039.102 that determines the applicable emission standards for the engine family. For engines at or above 37 kW and below 56 kW from model years 2008 through 2012, and for engines less than 8 kW utilizing the provision at § 1039.101(c), you must state the applicable PM standard for the engine family.

(5) State the engine's displacement (in liters); however, you may omit this from the label if all the engines in the engine family have the same per-cylinder displacement and total displacement.

(6) State the date of manufacture [DAY (optional), MONTH, and YEAR]; however, you may omit this from the label if you stamp, engrave, or otherwise permanently identify it elsewhere on the engine, in which case you must also describe in your application for certification where you will identify the date on the engine.

(7) State the FELs to which the engines are certified if certification depends on the ABT provisions of subpart H of this part.

(8) Identify the emission-control system. Use terms and abbreviations as described in 40 CFR 1068.45. You may omit this information from the label if there is not enough room for it and you put it in the owners manual instead.

(9) For diesel-fueled engines, unless otherwise specified in § 1039.104(e)(2), state: ''ULTRA LOW SULFUR FUEL ONLY'.

(10) Identify any additional requirements for fuel and lubricants that do not involve fuel-sulfur levels. You may omit this information from the label if there is not enough room for it and you put it in the owners manual instead.

(11) State the useful life for your engine family if we approve a shortened useful life under § 1039.101(g)(2).

(12) State: ''THIS ENGINE COMPLIES WITH U.S. EPA REGULATIONS FOR [MODEL YEAR] NONROAD DIESEL ENGINES.''.

(13) For engines above 560 kW, include the following things:

(i) For engines certified to the emission standards for generator-set engines, add the phrase ''FOR GENERATOR SETS AND OTHER APPLICATIONS''.

(ii) For all other engines, add the phrase ''NOT FOR USE IN A GENERATOR SET''.

(14) If your engines are certified only for constant-speed operation, state ''USE IN CONSTANT-SPEED APPLICATIONS ONLY''.

(d) You may add information to the emission control information label to identify other emission standards that the engine meets or does not meet (such as European standards). You may also add other information to ensure that the engine will be properly maintained and used.

(e) Except as specified in § 1039.104(e)(2), create a separate label with the statement: ''ULTRA LOW SULFUR FUEL ONLY''. Permanently attach this label to the equipment near the fuel inlet or, if you do not manufacture the equipment, take one of the following steps to ensure that the equipment will be properly labeled:

(1) Provide the label to the equipment manufacturer and include the appropriate information in the emission-related installation instructions.

(2) Confirm that the equipment manufacturers install their own complying labels.

(f) You may ask us to approve modified labeling requirements in this part 1039 if you show that it is necessary or appropriate. We will approve your request if your alternate label is consistent with the requirements of this part.

(g) If you obscure the engine label while installing the engine in the equipment such that the label cannot be read during normal maintenance, you must place a duplicate label on the equipment. If others install your engine in their equipment in a way that obscures the engine label, we require them to add a duplicate label on the equipment (see 40 CFR 1068.105); in that case, give them the number of duplicate labels they request and keep the following records for at least five years:

(1) Written documentation of the request from the equipment manufacturer.

(2) The number of duplicate labels you send for each engine family and the date you sent them.

[69 FR 39213, June 29, 2004, as amended at 72 FR 53130, Sept. 18, 2007; 73 FR 59191, Oct 8, 2008; 75 FR 22989, Apr. 30, 2010]

§ 1039.140 What is my engine's maximum engine power?

(a) An engine configuration's maximum engine power is the maximum brake power point on the nominal power curve for the engine configuration, as defined in this section. Round the power value to the nearest whole kilowatt.

(b) The nominal power curve of an engine configuration is the relationship between maximum available engine brake power and engine speed for an engine, using the mapping procedures of 40 CFR part 1065, based on the manufacturer's design and production specifications for the engine. This information may also be expressed by a torque curve that relates maximum available engine torque with engine speed.

(c) The nominal power curve must be within the range of the actual power curves of production engines considering normal production variability. If after production begins it is determined that your nominal power curve does not represent production engines, we may require you to amend your application for certification under § 1039.225.

(d) Throughout this part, references to a specific power value or a range of power values for an engine are based on maximum engine power. For example, the group of engines with maximum engine power above 560 kW may be referred to as engines above 560 kW.

Subpart C—Certifying Engine Families

§ 1039.201 What are the general requirements for obtaining a certificate of conformity?

(a) You must send us a separate application for a certificate of conformity for each engine family. A certificate of conformity is valid from the indicated effective date until December 31 of the model year for which it is issued.

(b) The application must contain all the information required by this part and must not include false or incomplete statements or information (see § 1039.255).

(c) We may ask you to include less information than we specify in this subpart, as long as you maintain all the information required by § 1039.250.

(d) You must use good engineering judgment for all decisions related to your application (see 40 CFR 1068.5).

(e) An authorized representative of your company must approve and sign the application.

(f) See § 1039.255 for provisions describing how we will process your application.

(g) We may require you to deliver your test engines to a facility we designate for our testing (see § 1039.235(c)).

(h) For engines that become new after being placed into service, such as engines converted to nonroad use after being used in motor vehicles, we may specify alternate certification provisions consistent with the intent of this part. *See* the definition of ''new nonroad engine'' in § 1039.801.

[69 FR 39213, June 29, 2004, as amended at 75 FR 22990, Apr. 30, 2010]

§ 1039.205 What must I include in my application?

This section specifies the information that must be in your application, unless we ask you to include less information under § 1039.201(c). We may require you to provide additional information to evaluate your application.

(a) Describe the engine family's specifications and other basic parameters of the engine's design and emission controls. List the fuel type on which your engines are designed to operate (for example, ultra low-sulfur diesel fuel). List each distinguishable engine configuration in the engine family. For each engine configuration, list the maximum engine power and the range of values for maximum engine power resulting from production tolerances, as described in § 1039.140.

(b) Explain how the emission-control system operates. Describe in detail all system components for controlling exhaust emissions, including all auxiliary-emission control devices (AECDs) and all fuel-system components you will install on any production or test engine. Identify the part number of each component you describe. For this paragraph (b), treat as separate AECDs any devices that modulate or activate differently from each other. Include all the following:

(1) Give a general overview of the engine, the emission-control strategies, and all AECDs.

(2) Describe each AECD's general purpose and function.

(3) Identify the parameters that each AECD senses (including measuring, estimating, calculating, or empirically deriving the values). Include equipment-based parameters and state whether you simulate them during testing with the applicable procedures.

(4) Describe the purpose for sensing each parameter.

(5) Identify the location of each sensor the AECD uses.

(6) Identify the threshold values for the sensed parameters that activate the AECD.

(7) Describe the parameters that the AECD modulates (controls) in response to any sensed parameters, including the range of modulation for each parameter, the relationship between the sensed parameters and the controlled parameters and how the modulation achieves the AECD's stated purpose. Use graphs and tables, as necessary.

(8) Describe each AECD's specific calibration details. This may be in the

form of data tables, graphical representations, or some other description.

(9) Describe the hierarchy among the AECDs when multiple AECDs sense or modulate the same parameter. Describe whether the strategies interact in a comparative or additive manner and identify which AECD takes precedence in responding, if applicable.

(10) Explain the extent to which the AECD is included in the applicable test procedures specified in subpart F of this part.

(11) Do the following additional things for AECDs designed to protect engines or equipment:

(i) Identify the engine and/or equipment design limits that make protection necessary and describe any damage that would occur without the AECD.

(ii) Describe how each sensed parameter relates to the protected components' design limits or those operating conditions that cause the need for protection.

(iii) Describe the relationship between the design limits/parameters being protected and the parameters sensed or calculated as surrogates for those design limits/parameters, if applicable.

(iv) Describe how the modulation by the AECD prevents engines and/or equipment from exceeding design limits.

(v) Explain why it is necessary to estimate any parameters instead of measuring them directly and describe how the AECD calculates the estimated value, if applicable.

(vi) Describe how you calibrate the AECD modulation to activate only during conditions related to the stated need to protect components and only as needed to sufficiently protect those components in a way that minimizes the emission impact.

(c) [Reserved]

(d) Describe the engines you selected for testing and the reasons for selecting them.

(e) Describe the test equipment and procedures that you used, including any special or alternate test procedures you used (see § 1039.501).

(f) Describe how you operated the emission-data engine before testing, including the duty cycle and the number of engine operating hours used to stabilize emission levels. Explain why you selected the method of service accumulation. Describe any scheduled maintenance you did.

(g) List the specifications of the test fuel to show that it falls within the required ranges we specify in 40 CFR part 1065.

(h) Identify the engine family's useful life.

(i) Include the maintenance instructions you will give to the ultimate purchaser of each new nonroad engine (see § 1039.125).

(j) Include the emission-related installation instructions you will provide if someone else installs your engines in a piece of nonroad equipment (see § 1039.130).

(k) Describe your emission control information label (see § 1039.135).

(l) Identify the emission standards or FELs to which you are certifying engines in the engine family. Identify the ambient operating regions that will apply for NTE testing under § 1039.101(e)(4).

(m) Identify the engine family's deterioration factors and describe how you developed them (see § 1039.245). Present any emission test data you used for this.

(n) State that you operated your emission-data engines as described in the application (including the test procedures, test parameters, and test fuels) to show you meet the requirements of this part.

(o) Present emission data for hydrocarbons (such as NMHC or THCE, as applicable), NO_X, PM, and CO on an emission-data engine to show your engines meet the applicable duty-cycle emission standards we specify in § 1039.101. Show emission figures before and after applying adjustment factors for regeneration and deterioration factors for each engine. Include emission results for each mode if you do discrete-mode testing under § 1039.505. Present emission data to show that you meet any applicable smoke standards we specify in § 1039.105. If we specify more than one grade of any fuel type (for example, high-sulfur and low-sulfur diesel fuel), you need to submit test data only for one grade, unless the regulations of this part specify otherwise

for your engine. Note that § 1039.235 allows you to submit an application in certain cases without new emission data.

(p) State that all the engines in the engine family comply with the not-to-exceed emission standards we specify in subpart B of this part for all normal operation and use when tested as specified in § 1039.515. Describe any relevant testing, engineering analysis, or other information in sufficient detail to support your statement.

(q) For engines above 560 kW, include information showing how your emission controls will function during normal in-use transient operation. For example, this might include the following:

(1) Emission data from transient testing of engines using measurement systems designed for measuring in-use emissions.

(2) Comparison of the engine design for controlling transient emissions with that from engines for which you have emission data over the transient duty cycle for certification.

(3) Detailed descriptions of control algorithms and other design parameters for controlling transient emissions.

(r) Report test results as follows:

(1) Report all test results involving measurement of pollutants for which emission standards apply. Include test results from invalid tests or from any other tests, whether or not they were conducted according to the test procedures of subpart F of this part. We may ask you to send other information to confirm that your tests were valid under the requirements of this part and 40 CFR part 1065.

(2) Report measured CO_2, N_2O, and CH_4 as described in § 1039.235. Small-volume engine manufacturers may omit reporting N_2O and CH_4.

(s) Describe all adjustable operating parameters (see § 1039.115(e)), including production tolerances. Include the following in your description of each parameter:

(1) The nominal or recommended setting.

(2) The intended physically adjustable range.

(3) The limits or stops used to establish adjustable ranges.

(4) Information showing why the limits, stops, or other means of inhibiting adjustment are effective in preventing adjustment of parameters on in-use engines to settings outside your intended physically adjustable ranges.

(t) Provide the information to read, record, and interpret all the information broadcast by an engine's onboard computers and electronic control units. State that, upon request, you will give us any hardware, software, or tools we would need to do this. If you broadcast a surrogate parameter for torque values, you must provide us what we need to convert these into torque units. You may reference any appropriate publicly released standards that define conventions for these messages and parameters. Format your information consistent with publicly released standards.

(u) Confirm that your emission-related installation instructions specify how to ensure that sampling of exhaust emissions will be possible after engines are installed in equipment and placed in service. If this cannot be done by simply adding a 20-centimeter extension to the exhaust pipe, show how to sample exhaust emissions in a way that prevents diluting the exhaust sample with ambient air.

(v) State whether your certification is intended to include engines used in stationary applications. State whether your certification is limited for certain engines. If this is the case, describe how you will prevent use of these engines in applications for which they are not certified. This applies for engines such as the following:

(1) Constant-speed engines.

(2) Engines used for transportation refrigeration units that you certify under the provisions of § 1039.645.

(3) Hand-startable engines certified under the provisions of § 1039.101(c).

(4) Engines above 560 KW that are not certified to emission standards for generator-set engines.

(w) Unconditionally certify that all the engines in the engine family comply with the requirements of this part, other referenced parts of the CFR, and the Clean Air Act.

(x) Include good-faith estimates of U.S.-directed production volumes. Include a justification for the estimated

production volumes if they are substantially different than actual production volumes in earlier years for similar models.

(y) Include the information required by other subparts of this part. For example, include the information required by § 1039.725 if you participate in the ABT program.

(z) Include other applicable information, such as information specified in this part or 40 CFR part 1068 related to requests for exemptions.

(aa) Name an agent for service located in the United States. Service on this agent constitutes service on you or any of your officers or employees for any action by EPA or otherwise by the United States related to the requirements of this part.

[69 FR 39213, June 29, 2004, as amended at 71 FR 39185, July 11, 2006; 72 FR 53131, Sept. 18, 2007; 74 FR 56508, Oct. 30, 2009]

§ 1039.210 May I get preliminary approval before I complete my application?

If you send us information before you finish the application, we will review it and make any appropriate determinations, especially for questions related to engine family definitions, auxiliary emission-control devices, deterioration factors, testing for service accumulation, maintenance, and NTE deficiencies and carve-outs. Decisions made under this section are considered to be preliminary approval, subject to final review and approval. We will generally not reverse a decision where we have given you preliminary approval, unless we find new information supporting a different decision. If you request preliminary approval related to the upcoming model year or the model year after that, we will make best-efforts to make the appropriate determinations as soon as practicable. We will generally not provide preliminary approval related to a future model year more than two years ahead of time.

[72 FR 53131, Sept. 18, 2007]

§ 1039.220 How do I amend the maintenance instructions in my application?

You may amend your emission-related maintenance instructions after you submit your application for certification as long as the amended instructions remain consistent with the provisions of § 1039.125. You must send the Designated Compliance Officer a written request to amend your application for certification for an engine family if you want to change the emission-related maintenance instructions in a way that could affect emissions. In your request, describe the proposed changes to the maintenance instructions. If operators follow the original maintenance instructions rather than the newly specified maintenance, this does not allow you to disqualify those engines from in-use testing or deny a warranty claim.

(a) If you are decreasing or eliminating any specified maintenance, you may distribute the new maintenance instructions to your customers 30 days after we receive your request, unless we disapprove your request. This would generally include replacing one maintenance step with another. We may approve a shorter time or waive this requirement.

(b) If your requested change would not decrease the specified maintenance, you may distribute the new maintenance instructions anytime after you send your request. For example, this paragraph (b) would cover adding instructions to increase the frequency of filter changes for engines in severe-duty applications.

(c) You need not request approval if you are making only minor corrections (such as correcting typographical mistakes), clarifying your maintenance instructions, or changing instructions for maintenance unrelated to emission control. We may ask you to send us copies of maintenance instructions revised under this paragraph (c).

[75 FR 22990, Apr. 30, 2010]

§ 1039.225 How do I amend my application for certification?

Before we issue you a certificate of conformity, you may amend your application to include new or modified engine configurations, subject to the provisions of this section. After we have issued your certificate of conformity, you may send us an amended application requesting that we include new or modified engine configurations

within the scope of the certificate, subject to the provisions of this section. You must amend your application if any changes occur with respect to any information that is included or should be included in your application.

(a) You must amend your application before you take any of the following actions:

(1) Add an engine configuration to an engine family. In this case, the engine configuration added must be consistent with other engine configurations in the engine family with respect to the criteria listed in § 1039.230.

(2) Change an engine configuration already included in an engine family in a way that may affect emissions, or change any of the components you described in your application for certification. This includes production and design changes that may affect emissions any time during the engine's lifetime.

(3) Modify an FEL for an engine family as described in paragraph (f) of this section.

(b) To amend your application for certification, send the relevant information to the Designated Compliance Officer.

(1) Describe in detail the addition or change in the engine model or configuration you intend to make.

(2) Include engineering evaluations or data showing that the amended engine family complies with all applicable requirements. You may do this by showing that the original emission-data engine is still appropriate for showing that the amended family complies with all applicable requirements.

(3) If the original emission-data engine for the engine family is not appropriate to show compliance for the new or modified engine configuration, include new test data showing that the new or modified engine configuration meets the requirements of this part.

(c) We may ask for more test data or engineering evaluations. You must give us these within 30 days after we request them.

(d) For engine families already covered by a certificate of conformity, we will determine whether the existing certificate of conformity covers your newly added or modified engine. You may ask for a hearing if we deny your request (see § 1039.820).

(e) For engine families already covered by a certificate of conformity, you may start producing the new or modified engine configuration anytime after you send us your amended application and before we make a decision under paragraph (d) of this section. However, if we determine that the affected engines do not meet applicable requirements, we will notify you to cease production of the engines and may require you to recall the engines at no expense to the owner. Choosing to produce engines under this paragraph (e) is deemed to be consent to recall all engines that we determine do not meet applicable emission standards or other requirements and to remedy the nonconformity at no expense to the owner. If you do not provide information required under paragraph (c) of this section within 30 days after we request it, you must stop producing the new or modified engines.

(f) You may ask us to approve a change to your FEL in certain cases after the start of production. The changed FEL may not apply to engines you have already introduced into U.S. commerce, except as described in this paragraph (f). If we approve a changed FEL after the start of production, you must include the new FEL on the emission control information label for all engines produced after the change. You may ask us to approve a change to your FEL in the following cases:

(1) You may ask to raise your FEL for your engine family at any time. In your request, you must show that you will still be able to meet the emission standards as specified in subparts B and H of this part. If you amend your application by submitting new test data to include a newly added or modified engine, as described in paragraph (b)(3) of this section, use the appropriate FELs with corresponding production volumes to calculate emission credits for the model year, as described in subpart H of this part. In all other circumstances, you must use the higher FEL for the entire engine family to calculate emission credits under subpart H of this part.

(2) You may ask to lower the FEL for your engine family only if you have

test data from production engines showing that emissions are below the proposed lower FEL. The lower FEL applies only to engines you produce after we approve the new FEL. Use the appropriate FELs with corresponding production volumes to calculate emission credits for the model year, as described in subpart H of this part.

[69 FR 39213, June 29, 2004, as amended at 70 FR 40463, July 13, 2005; 72 FR 53131, Sept. 18, 2007; 75 FR 22990, Apr. 30, 2010]

§ 1039.230 How do I select engine families?

(a) For purposes of certification, divide your product line into families of engines that are expected to have similar emission characteristics throughout the useful life as described in this section. Your engine family is limited to a single model year.

(b) Group engines in the same engine family if they are the same in all the following aspects:

(1) The combustion cycle and fuel.

(2) The cooling system (water-cooled vs. air-cooled).

(3) Method of air aspiration.

(4) Method of exhaust aftertreatment (for example, catalytic converter or particulate trap).

(5) Combustion chamber design.

(6) Bore and stroke.

(7) Cylinder arrangement (such as inline vs. vee configurations). This applies for engines with aftertreatment devices only.

(8) Method of control for engine operation other than governing (*i.e.*, mechanical or electronic).

(9) Power category.

(10) Numerical level of the emission standards that apply to the engine.

(c) You may subdivide a group of engines that is identical under paragraph (b) of this section into different engine families if you show the expected emission characteristics are different during the useful life.

(d) In unusual circumstances, you may group engines that are not identical with respect to the things listed in paragraph (b) of this section in the same engine family if you show that their emission characteristics during the useful life will be similar.

(e) If you combine engines from different power categories into a single engine family under paragraph (d) of this section, you must certify the engine family to the more stringent set of standards from the two power categories in that model year.

[69 FR 39213, June 29, 2004, as amended at 72 FR 53131, Sept. 18, 2007; 75 FR 22990, Apr. 30, 2010]

§ 1039.235 What testing requirements apply for certification?

This section describes the emission testing you must perform to show compliance with the emission standards in § 1039.101(a) and (b) or § 1039.102(a) and (b). See § 1039.205(p) regarding emission testing related to the NTE standards. See § 1039.240, § 1039.245, and 40 CFR part 1065, subpart E, regarding service accumulation before emission testing.

(a) Test your emission-data engines using the procedures and equipment specified in subpart F of this part.

(b) Select an emission-data engine from each engine family for testing. Select the engine configuration with the highest volume of fuel injected per cylinder per combustion cycle at the point of maximum torque—unless good engineering judgment indicates that a different engine configuration is more likely to exceed (or have emissions nearer to) an applicable emission standard or FEL. If two or more engines have the same fueling rate at maximum torque, select the one with the highest fueling rate at rated speed. In making this selection, consider all factors expected to affect emission-control performance and compliance with the standards, including emission levels of all exhaust constituents, especially NO_X and PM.

(c) We may measure emissions from any of your emission-data engines or other engines from the engine family, as follows:

(1) We may decide to do the testing at your plant or any other facility. If we do this, you must deliver the engine to a test facility we designate. The engine you provide must include appropriate manifolds, aftertreatment devices, electronic control units, and other emission-related components not normally attached directly to the engine block. If we do the testing at your plant, you must schedule it as soon as

possible and make available the instruments, personnel, and equipment we need.

(2) If we measure emissions on one of your engines, the results of that testing become the official emission results for the engine. Unless we later invalidate these data, we may decide not to consider your data in determining if your engine family meets applicable requirements.

(3) Before we test one of your engines, we may set its adjustable parameters to any point within the physically adjustable ranges (*see* §1039.115(e)).

(4) Before we test one of your engines, we may calibrate it within normal production tolerances for anything we do not consider an adjustable parameter. For example, this would apply for an engine parameter that is subject to production variability because it is adjustable during production, but is not considered an adjustable parameter (as defined in §1039.801) because it is permanently sealed.

(d) You may ask to use carryover emission data from a previous model year instead of doing new tests, but only if all the following are true:

(1) The engine family from the previous model year differs from the current engine family only with respect to model year or other characteristics unrelated to emissions.

(2) The emission-data engine from the previous model year remains the appropriate emission-data engine under paragraph (b) of this section.

(3) The data show that the emission-data engine would meet all the requirements that apply to the engine family covered by the application for certification.

(e) We may require you to test a second engine of the same or different configuration in addition to the engine tested under paragraph (b) of this section.

(f) If you use an alternate test procedure under 40 CFR 1065.10 and later testing shows that such testing does not produce results that are equivalent to the procedures specified in subpart F of this part, we may reject data you generated using the alternate procedure.

(g) Measure CO_2 and CH_4 with each low-hour certification test using the procedures specified in 40 CFR part 1065 in the 2011 and 2012 model years, respectively. Also measure N_2O with each low-hour certification test using the procedures specified in 40 CFR part 1065 starting in the 2013 model year for any engine family that depends on NOx aftertreatment to meet emission standards. Small-volume engine manufacturers may omit measurement of N_2O and CH_4. These measurements are not required for NTE testing. Use the same units and modal calculations as for your other results to report a single weighted value for each constituent. Round the final values as follows:

(1) Round CO_2 to the nearest 1 g/kW-hr.

(2) Round N_2O to the nearest 0.001 g/kW-hr.

(3) Round CH_4 to the nearest 0.001g/kW-hr.

[69 FR 39213, June 29, 2004, as amended at 72 FR 53131, Sept. 18, 2007; 74 FR 56509, Oct. 30, 2009; 75 FR 22991, Apr. 30, 2010]

§1039.240 How do I demonstrate that my engine family complies with exhaust emission standards?

(a) For purposes of certification, your engine family is considered in compliance with the emission standards in §1039.101(a) and (b), §1039.102(a) and (b), §1039.104, and §1039.105 if all emission-data engines representing that family have test results showing official emission results and deteriorated emission levels at or below these standards. This also applies for all test points for emission-data engines within the family used to establish deterioration factors. Note that your FELs are considered to be the applicable emission standards with which you must comply if you participate in the ABT program in subpart H of this part.

(b) Your engine family is deemed not to comply if any emission-data engine representing that family has test results showing an official emission result or a deteriorated emission level for any pollutant that is above an applicable emission standard. Similarly, your engine family is deemed not to comply if any emission-data engine representing that family has test results showing any emission level above

the applicable not-to-exceed emission standard for any pollutant. This also applies for all test points for emission-data engines within the family used to establish deterioration factors.

(c) To compare emission levels from the emission-data engine with the applicable emission standards, apply deterioration factors to the measured emission levels for each pollutant. Section 1039.245 specifies how to test your engine to develop deterioration factors that represent the deterioration expected in emissions over your engines' full useful life. Your deterioration factors must take into account any available data from in-use testing with similar engines. Small-volume engine manufacturers may use assigned deterioration factors that we establish. Apply deterioration factors as follows:

(1) *Additive deterioration factor for exhaust emissions.* Except as specified in paragraph (c)(2) of this section, use an additive deterioration factor for exhaust emissions. An additive deterioration factor is the difference between exhaust emissions at the end of the useful life and exhaust emissions at the low-hour test point. In these cases, adjust the official emission results for each tested engine at the selected test point by adding the factor to the measured emissions. If the factor is less than zero, use zero. Additive deterioration factors must be specified to one more decimal place than the applicable standard.

(2) *Multiplicative deterioration factor for exhaust emissions.* Use a multiplicative deterioration factor if good engineering judgment calls for the deterioration factor for a pollutant to be the ratio of exhaust emissions at the end of the useful life to exhaust emissions at the low-hour test point. For example, if you use aftertreatment technology that controls emissions of a pollutant proportionally to engine-out emissions, it is often appropriate to use a multiplicative deterioration factor. Adjust the official emission results for each tested engine at the selected test point by multiplying the measured emissions by the deterioration factor. If the factor is less than one, use one. A multiplicative deterioration factor may not be appropriate in cases where testing variability is significantly greater than engine-to-engine variability. Multiplicative deterioration factors must be specified to one more significant figure than the applicable standard.

(3) *Deterioration factor for smoke.* Deterioration factors for smoke are always additive, as described in paragraph (c)(1) of this section.

(4) *Deterioration factor for crankcase emissions.* If your engine vents crankcase emissions to the exhaust or to the atmosphere, you must account for crankcase emission deterioration, using good engineering judgment. You may use separate deterioration factors for crankcase emissions of each pollutant (either multiplicative or additive) or include the effects in combined deterioration factors that include exhaust and crankcase emissions together for each pollutant.

(d) Collect emission data using measurements to one more decimal place than the applicable standard. Apply the deterioration factor to the official emission result, as described in paragraph (c) of this section, then round the adjusted figure to the same number of decimal places as the emission standard. Compare the rounded emission levels to the emission standard for each emission-data engine. In the case of NO_X+NMHC standards, apply the deterioration factor to each pollutant and then add the results before rounding.

(e) For engines subject to NMHC standards, you may base compliance on total hydrocarbon (THC) emissions. Indicate in your application for certification if you are using this option. If you do, measure THC emissions and calculate NMHC emissions as 98 percent of THC emissions, as shown in the following equation:

$$NMHC = (0.98) \times (THC).$$

[69 FR 39213, June 29, 2004, as amended at 70 FR 40463, July 13, 2005; 75 FR 22991, Apr. 30, 2010]

§ 1039.245 How do I determine deterioration factors from exhaust durability testing?

This section describes how to determine deterioration factors, either with an engineering analysis, with pre-existing test data, or with new emission measurements. Apply these deterioration factors to determine whether your

engines will meet the duty-cycle emission standards throughout the useful life as described in § 1039.240.

(a) You may ask us to approve deterioration factors for an engine family with established technology based on engineering analysis instead of testing. Engines certified to a NO_X+NMHC standard or FEL greater than the Tier 3 NO_X+NMHC standard described in 40 CFR 89.112 are considered to rely on established technology for gaseous emission control, except that this does not include any engines that use exhaust-gas recirculation or aftertreatment. In most cases, technologies used to meet the Tier 1 and Tier 2 emission standards would be considered to be established technology.

(b) You may ask us to approve deterioration factors for an engine family based on emission measurements from similar highway or nonroad engines if you have already given us these data for certifying the other engines in the same or earlier model years. Use good engineering judgment to decide whether the two engines are similar. We will approve your request if you show us that the emission measurements from other engines reasonably represent in-use deterioration for the engine family for which you have not yet determined deterioration factors.

(c) If you are unable to determine deterioration factors for an engine family under paragraph (a) or (b) of this section, select engines, subsystems, or components for testing. Determine deterioration factors based on service accumulation and related testing to represent the deterioration expected from in-use engines over the full useful life. You must measure emissions from the emission-data engine at least three times with evenly spaced intervals of service accumulation. You may use extrapolation to determine deterioration factors once you have established a trend of changing emissions with age for each pollutant. You may use an engine installed in nonroad equipment to accumulate service hours instead of running the engine only in the laboratory. You may perform maintenance on emission-data engines as described in § 1039.125 and 40 CFR part 1065, subpart E. Use good engineering judgment for all aspects of the effort to establish deterioration factors under this paragraph (c).

(d) Include the following information in your application for certification:

(1) If you use test data from a different engine family, explain why this is appropriate and include all the emission measurements on which you base the deterioration factor.

(2) If you determine your deterioration factors based on engineering analysis, explain why this is appropriate and include a statement that all data, analyses, evaluations, and other information you used are available for our review upon request.

(3) If you do testing to determine deterioration factors, describe the form and extent of service accumulation, including a rationale for selecting the service-accumulation period and the method you use to accumulate hours.

[69 FR 39213, June 29, 2004, as amended at 72 FR 53131, Sept. 18, 2007; 75 FR 22991, Apr. 30, 2010]

§ 1039.250 What records must I keep and what reports must I send to EPA?

(a) Within 45 days after the end of the model year, send the Designated Compliance Officer a report describing the following information about engines you produced during the model year:

(1) Report the total number of engines you produced in each engine family by maximum engine power, total displacement, and the type of fuel system.

(2) If you produced exempted engines under the provisions of § 1039.625, report the number of exempted engines you produced for each engine model and identify the buyer or shipping destination for each exempted engine.

(b) Organize and maintain the following records:

(1) A copy of all applications and any summary information you send us.

(2) Any of the information we specify in § 1039.205 that you were not required to include in your application.

(3) A detailed history of each emission-data engine. For each engine, describe all of the following:

(i) The emission-data engine's construction, including its origin and buildup, steps you took to ensure that it represents production engines, any

components you built specially for it, and all the components you include in your application for certification.

(ii) How you accumulated engine operating hours (service accumulation), including the dates and the number of hours accumulated.

(iii) All maintenance, including modifications, parts changes, and other service, and the dates and reasons for the maintenance.

(iv) All your emission tests, including documentation on routine and standard tests, as specified in part 40 CFR part 1065, and the date and purpose of each test.

(v) All tests to diagnose engine or emission-control performance, giving the date and time of each and the reasons for the test.

(vi) Any other significant events.

(4) Production figures for each engine family divided by assembly plant.

(5) Keep a list of engine identification numbers for all the engines you produce under each certificate of conformity.

(c) Keep data from routine emission tests (such as test cell temperatures and relative humidity readings) for one year after we issue the associated certificate of conformity. Keep all other information specified in this section for eight years after we issue your certificate.

(d) Store these records in any format and on any media, as long as you can promptly send us organized, written records in English if we ask for them. You must keep these records readily available. We may review them at any time.

[69 FR 39213, June 29, 2004, as amended at 75 FR 22991, Apr. 30, 2010]

§ 1039.255 What decisions may EPA make regarding my certificate of conformity?

(a) If we determine your application is complete and shows that the engine family meets all the requirements of this part and the Act, we will issue a certificate of conformity for your engine family for that model year. We may make the approval subject to additional conditions.

(b) We may deny your application for certification if we determine that your engine family fails to comply with emission standards or other requirements of this part or the Clean Air Act. We will base our decision on all available information. If we deny your application, we will explain why in writing.

(c) In addition, we may deny your application or suspend or revoke your certificate if you do any of the following:

(1) Refuse to comply with any testing or reporting requirements.

(2) Submit false or incomplete information (paragraph (e) of this section applies if this is fraudulent).

(3) Render inaccurate any test data.

(4) Deny us from completing authorized activities despite our presenting a warrant or court order (see 40 CFR 1068.20). This includes a failure to provide reasonable assistance.

(5) Produce engines for importation into the United States at a location where local law prohibits us from carrying out authorized activities.

(6) Fail to supply requested information or amend your application to include all engines being produced.

(7) Take any action that otherwise circumvents the intent of the Act or this part.

(d) We may void your certificate if you do not keep the records we require or do not give us information as required under this part or the Act.

(e) We may void your certificate if we find that you intentionally submitted false or incomplete information.

(f) If we deny your application or suspend, revoke, or void your certificate, you may ask for a hearing (see § 1039.820).

[69 FR 39213, June 29, 2004, as amended at 72 FR 53132, Sept. 18, 2007; 75 FR 22991, Apr. 30, 2010]

Subpart D [Reserved]

Subpart E—In-Use Testing

§ 1039.401 General provisions.

We may perform in-use testing of any engine subject to the standards of this part. However, we will limit recall testing to the first 75 percent of each engine's useful life as specified in § 1039.101(g).

Subpart F—Test Procedures

§ 1039.501 How do I run a valid emission test?

(a) Use the equipment and procedures for compression-ignition engines in 40 CFR part 1065 to determine whether engines meet the duty-cycle emission standards in subpart B of this part. Measure the emissions of all the exhaust constituents subject to emissions standards as specified in 40 CFR part 1065. Measure CO_2, N_2O, and CH_4 as described in § 1039.235. Use the applicable duty cycles specified in §§ 1039.505 and 1039.510.

(b) Section 1039.515 describes the supplemental procedures for evaluating whether engines meet the not-to-exceed emission standards in subpart B of this part.

(c) Measure smoke using the procedures in 40 CFR part 86, subpart I, for evaluating whether engines meet the smoke standards in § 1039.105, except that you may test two-cylinder engines with an exhaust muffler like those installed on in-use engines.

(d) Use the fuels specified in § 1039.104(e) and 40 CFR part 1065 to perform valid tests.

(1) For service accumulation, use the test fuel or any commercially available fuel that is representative of the fuel that in-use engines will use.

(2) For diesel-fueled engines, use the appropriate diesel fuel specified in 40 CFR part 1065 for emission testing. Unless we specify otherwise, the appropriate diesel test fuel is the ultra low-sulfur diesel fuel. If we allow you to use a test fuel with higher sulfur levels, identify the test fuel in your application for certification and ensure that the emission control information label is consistent with your selection of the test fuel (see § 1039.135(c)(9)). For example, do not test with ultra low-sulfur diesel fuel if you intend to label your engines to allow use of diesel fuel with sulfur concentrations up to 500 ppm.

(e) You may use special or alternate procedures to the extent we allow them under 40 CFR 1065.10.

(f) This subpart is addressed to you as a manufacturer, but it applies equally to anyone who does testing for you, and to us when we perform testing to determine if your engines meet emission standards.

[69 FR 39213, June 29, 2004, as amended at 70 FR 40463, July 13, 2005; 72 FR 53132, Sept. 18, 2007; 74 FR 56509, Oct. 30, 2009]

§ 1039.505 How do I test engines using steady-state duty cycles, including ramped-modal testing?

This section describes how to test engines under steady-state conditions. In some cases, we allow you to choose the appropriate steady-state duty cycle for an engine. In these cases, you must use the duty cycle you select in your application for certification for all testing you perform for that engine family. If we test your engines to confirm that they meet emission standards, we will use the duty cycles you select for your own testing. We may also perform other testing as allowed by the Clean Air Act.

(a) You may perform steady-state testing with either discrete-mode or ramped-modal cycles, as follows:

(1) For discrete-mode testing, sample emissions separately for each mode, then calculate an average emission level for the whole cycle using the weighting factors specified for each mode. Calculate cycle statistics and compare with the established criteria as specified in 40 CFR 1065.514 to confirm that the test is valid. Operate the engine and sampling system as follows:

(i) *Engines with NO_X aftertreatment.* For engines that depend on aftertreatment to meet the NO_X emission standard, operate the engine for 5–6 minutes, then sample emissions for 1–3 minutes in each mode. You may extend the sampling time to improve measurement accuracy of PM emissions, using good engineering judgment. If you have a longer sampling time for PM emissions, calculate and validate cycle statistics separately for the gaseous and PM sampling periods.

(ii) Engines without NO_X aftertreatment. For other engines, operate the engine for at least 5 minutes, then sample emissions for at least 1 minute in each mode.

(2) For ramped-modal testing, start sampling at the beginning of the first mode and continue sampling until the

end of the last mode. Calculate emissions and cycle statistics the same as for transient testing.

(b) Measure emissions by testing the engine on a dynamometer with one of the following duty cycles to determine whether it meets the steady-state emission standards in § 1039.101(b):

(1) Use the 5-mode duty cycle or the corresponding ramped-modal cycle described in Appendix II of this part for constant-speed engines. Note that these cycles do not apply to all engines used in constant-speed applications, as described in § 1039.801.

(2) Use the 6-mode duty cycle or the corresponding ramped-modal cycle described in Appendix III of this part for variable-speed engines below 19 kW. You may instead use the 8-mode duty cycle or the corresponding ramped-modal cycle described in Appendix IV of this part if some engines from your engine family will be used in applications that do not involve governing to maintain engine operation around rated speed.

(3) Use the 8-mode duty cycle or the corresponding ramped-modal cycle described in Appendix IV of this part for variable-speed engines at or above 19 kW.

(c) During idle mode, operate the engine at its warm idle speed as described in 40 CFR part 1065.

(d) For constant-speed engines whose design prevents full-load operation for extended periods, you may ask for approval under 40 CFR 1065.10(c) to replace full-load operation with the maximum load for which the engine is designed to operate for extended periods.

(e) See 40 CFR part 1065 for detailed specifications of tolerances and calculations.

(f) For those cases where transient testing is not necessary, perform the steady-state test according to this section after an appropriate warm-up period, consistent with 40 CFR part 1065, subpart F.

(g) To allow non-motoring dynamometers on cycles with idle, you may omit additional points from the duty-cycle regression as follows:

(1) For variable-speed engines with low-speed governors, you may omit speed, torque, and power points from the duty-cycle regression statistics if the following are met:

(i) The engine operator demand is at its minimum.

(ii) The dynamometer demand is at its minimum.

(iii) It is an idle point $f_{nref} = 0$ % (idle) and $T_{ref} = 0$ % (idle).

(iv) $T_{ref} < T \leq 5\ \% \cdot T_{max}$ mapped.

(2) For variable-speed engines without low-speed governors, you may omit torque and power points from the duty-cycle regression statistics if the following are met:

(i) The dynamometer demand is at its minimum.

(ii) It is an idle point $f_{nref} = 0$ % (idle) and $T_{ref} = 0$ % (idle).

(iii) $f_{nref} - (2\ \% \cdot f_{ntest}) < f_n < f_{nref} + (2\ \% \cdot f_{ntest})$.

(iv) $T_{ref} < T \leq 5\ \% \cdot T_{max}$ mapped.

[69 FR 39213, June 29, 2004, as amended at 73 FR 37241, June 30, 2008]

§ 1039.510 Which duty cycles do I use for transient testing?

(a) Measure emissions by testing the engine on a dynamometer with one of the following transient duty cycles to determine whether it meets the transient emission standards in § 1039.101(a):

(1) For variable-speed engines, use the transient duty cycle described in Appendix VI of this part.

(2) [Reserved]

(b) The transient test sequence consists of an initial run through the transient duty cycle from a cold start, 20 minutes with no engine operation, then a final run through the same transient duty cycle. Start sampling emissions immediately after you start the engine. Calculate the official transient emission result from the following equation:

$$\text{Official transient emission result} = \frac{0.05 \cdot \text{cold-start emissions (g)} + 0.95 \cdot \text{hot-start emissions (g)}}{0.05 \cdot \text{cold-start work (kW} \cdot \text{hr)} + 0.95 \cdot \text{hot-start work (kW} \cdot \text{hr)}}$$

(c) Calculate cycle statistics and compare with the established criteria as specified in 40 CFR 1065.514 to confirm that the test is valid.

[69 FR 39213, June 29, 2004, as amended at 70 FR 40463, July 13, 2005; 75 FR 22991, Apr. 30, 2010]

§ 1039.515 What are the test procedures related to not-to-exceed standards?

(a) *General provisions.* The provisions in 40 CFR 86.1370–2007 apply for determining whether an engine meets the not-to-exceed emission standards in § 1039.101(e). Interpret references to vehicles and vehicle operation to mean equipment and equipment operation.

(b) *Special PM zone.* For engines certified to a PM standard or FEL above 0.07 g/kW-hr, a modified NTE control area applies for PM emissions only. The speeds and loads to be excluded are determined based on speeds B and C, determined according to the provisions of 40 CFR 86.1360–2007(c). One of the following provisions applies:

(1) If the C speed is below 2400 rpm, exclude the speed and load points to the right of or below the line formed by connecting the following two points on a plot of speed-vs.-power:

(i) 30% of maximum power at the B speed; however, use the power value corresponding to the engine operation at 30% of maximum torque at the B speed if this is greater than 30% of maximum power at the B speed.

(ii) 70% of maximum power at 100% speed.

(2) If the C speed is at or above 2400 rpm, exclude the speed and load points to the right of the line formed by connecting the two points in paragraphs (b)(2)(i) and (ii) of this section (the 30% and 50% torque/power points) and below the line formed by connecting the two points in paragraphs (b)(2)(ii) and (iii) of this section (the 50% and 70% torque/power points). The 30%, 50%, and 70% torque/power points are defined as follows:

(i) 30% of maximum power at the B speed; however, use the power value corresponding to the engine operation at 30% of maximum torque at the B speed if this is greater than 30% of maximum power at the B speed.

(ii) 50% of maximum power at 2400 rpm.

(iii) 70% of maximum power at 100% speed.

§ 1039.520 What testing must I perform to establish deterioration factors?

Sections 1039.240 and 1039.245 describe the method for testing that must be performed to establish deterioration factors for an engine family.

§ 1039.525 How do I adjust emission levels to account for infrequently regenerating aftertreatment devices?

This section describes how to adjust emission results from engines using aftertreatment technology with infrequent regeneration events. For this section, ''regeneration'' means an intended event during which emission levels change while the system restores aftertreatment performance. For example, exhaust gas temperatures may increase temporarily to remove sulfur from adsorbers or to oxidize accumulated particulate matter in a trap. For this section, ''infrequent'' refers to regeneration events that are expected to occur on average less than once over the applicable transient duty cycle or ramped-modal cycle, or on average less than once per typical mode in a discrete-mode test.

(a) *Developing adjustment factors.* Develop an upward adjustment factor and a downward adjustment factor for each pollutant based on measured emission data and observed regeneration frequency. Adjustment factors should generally apply to an entire engine family, but you may develop separate adjustment factors for different engine configurations within an engine family. If you use adjustment factors for certification, you must identify the frequency factor, F, from paragraph (b) of this section in your application for certification and use the adjustment factors in all testing for that engine family. You may use carryover or carry-across data to establish adjustment factors for an engine family, as described in § 1039.235(d), consistent with good engineering judgment. All adjustment factors for regeneration are additive. Determine adjustment factors separately for different test segments.

For example, determine separate adjustment factors for hot-start and cold-start test segments and for different modes of a discrete-mode steady-state test. You may use either of the following different approaches for engines that use aftertreatment with infrequent regeneration events:

(1) You may disregard this section if regeneration does not significantly affect emission levels for an engine family (or configuration) or if it is not practical to identify when regeneration occurs. If you do not use adjustment factors under this section, your engines must meet emission standards for all testing, without regard to regeneration.

(2) If your engines use aftertreatment technology with extremely infrequent regeneration and you are unable to apply the provisions of this section, you may ask us to approve an alternate methodology to account for regeneration events.

(b) *Calculating average adjustment factors.* Calculate the average adjustment factor (EF_A) based on the following equation:

$$EF_A = (F)(EF_H) + (1\text{-}F)(EF_L)$$

Where:

F = the frequency of the regeneration event in terms of the fraction of tests during which the regeneration occurs.

EF_H = measured emissions from a test segment in which the regeneration occurs.

EF_L = measured emissions from a test segment in which the regeneration does not occur.

(c) *Applying adjustment factors.* Apply adjustment factors based on whether regeneration occurs during the test run. You must be able to identify regeneration in a way that is readily apparent during all testing.

(1) If regeneration does not occur during a test segment, add an upward adjustment factor to the measured emission rate. Determine the upward adjustment factor (UAF) using the following equation:

$$UAF = EF_A - EF_L$$

(2) If regeneration occurs or starts to occur during a test segment, subtract a downward adjustment factor from the measured emission rate. Determine the downward adjustment factor (DAF) using the following equation:

$$DAF = EF_H - EF_A$$

(d) *Sample calculation.* If EF_L is 0.10 g/kW-hr, EF_H is 0.50 g/kW-hr, and F is 0.1 (the regeneration occurs once for each ten tests), then:

EF_A = (0.1)(0.5 g/kW-hr) + (1.0 − 0.1)(0.1 g/kW-hr) = 0.14 g/kW-hr.

UAF = 0.14 g/kW-hr − 0.10 g/kW-hr = 0.04 g/kW-hr.

DAF = 0.50 g/kW-hr − 0.14 g/kW-hr = 0.36 g/kW-hr.

Subpart G—Special Compliance Provisions

§ 1039.601 What compliance provisions apply to these engines?

Engine and equipment manufacturers, as well as owners, operators, and rebuilders of engines subject to the requirements of this part, and all other persons, must observe the provisions of this part, the requirements and prohibitions in 40 CFR part 1068, and the provisions of the Act.

§ 1039.605 What provisions apply to engines certified under the motor-vehicle program?

(a) *General provisions.* If you are an engine manufacturer, this section allows you to introduce new nonroad engines into commerce if they are already certified to the requirements that apply to compression-ignition engines under 40 CFR parts 85 and 86 for the appropriate model year. If you comply with all the provisions of this section, we consider the certificate issued under 40 CFR part 86 for each engine to also be a valid certificate of conformity under this part 1039 for its model year, without a separate application for certification under the requirements of this part 1039. See § 1039.610 for similar provisions that apply to engines certified to chassis-based standards for motor vehicles.

(b) *Equipment-manufacturer provisions.* If you are not an engine manufacturer, you may produce nonroad equipment using motor-vehicle engines under this section as long as you meet all the requirements and conditions specified in paragraph (d) of this section. You must also add the fuel-inlet label we specify in § 1039.135(e). If you modify the motor-vehicle engine in any of the

ways described in paragraph (d)(2) of this section, we will consider you a manufacturer of a new nonroad engine. Such engine modifications prevent you from using the provisions of this section.

(c) *Liability*. Engines for which you meet the requirements of this section are exempt from all the requirements and prohibitions of this part, except for those specified in this section. Engines exempted under this section must meet all the applicable requirements from 40 CFR parts 85 and 86. This applies to engine manufacturers, equipment manufacturers who use these engines, and all other persons as if these engines were used in a motor vehicle. The prohibited acts of 40 CFR 1068.101(a)(1) apply to these new engines and equipment; however, we consider the certificate issued under 40 CFR part 86 for each engine to also be a valid certificate of conformity under this part 1039 for its model year. If we make a determination that these engines do not conform to the regulations during their useful life, we may require you to recall them under 40 CFR part 86 or 40 CFR 1068.505.

(d) *Specific requirements*. If you are an engine manufacturer or equipment manufacturer and meet all the following criteria and requirements regarding your new nonroad engine, the engine is eligible for an exemption under this section:

(1) Your engine must be covered by a valid certificate of conformity issued under 40 CFR part 86.

(2) You must not make any changes to the certified engine that could reasonably be expected to increase its exhaust emissions for any pollutant, or its evaporative emissions if it is subject to evaporative-emission standards. For example, if you make any of the following changes to one of these engines, you do not qualify for this exemption:

(i) Change any fuel system parameters from the certified configuration.

(ii) Change, remove, or fail to properly install any other component, element of design, or calibration specified in the engine manufacturer's application for certification. This includes aftertreatment devices and all related components.

(iii) Modify or design the engine cooling system so that temperatures or heat rejection rates are outside the original engine manufacturer's specified ranges.

(3) You must show that fewer than 50 percent of the engine family's total sales in the United States are used in nonroad applications. This includes engines used in any application without regard to which company manufactures the vehicle or equipment. Show this as follows:

(i) If you are the original manufacturer of the engine, base this showing on your sales information.

(ii) In all other cases, you must get the original manufacturer of the engine to confirm this based on its sales information.

(4) You must ensure that the engine has the label we require under 40 CFR part 86.

(5) You must add a permanent supplemental label to the engine in a position where it will remain clearly visible after installation in the equipment. In the supplemental label, do the following:

(i) Include the heading: ''NONROAD ENGINE EMISSION CONTROL INFORMATION''.

(ii) Include your full corporate name and trademark. You may instead include the full corporate name and trademark of another company you choose to designate.

(iii) State: ''THIS ENGINE WAS ADAPTED FOR NONROAD USE WITHOUT AFFECTING ITS EMISSION CONTROLS. THE EMISSION-CONTROL SYSTEM DEPENDS ON THE USE OF FUEL MEETING SPECIFICATIONS THAT APPLY FOR MOTOR-VEHICLE APPLICATIONS. OPERATING THE ENGINE ON OTHER FUELS MAY BE A VIOLATION OF FEDERAL LAW.''.

(iv) State the date you finished modifying the engine (month and year), if applicable.

(6) The original and supplemental labels must be readily visible after the engine is installed in the equipment or, if the equipment obscures the engine's emission control information label, the equipment manufacturer must attach duplicate labels, as described in 40 CFR 1068.105.

(7) You must make sure that nonroad equipment produced under this section will have the fueling label we specify in § 1039.135(c)(9)(i).

(8) Send the Designated Compliance Officer a signed letter by the end of each calendar year (or less often if we tell you) with all the following information:

(i) Identify your full corporate name, address, and telephone number.

(ii) List the engine or equipment models you expect to produce under this exemption in the coming year and describe your basis for meeting the sales restrictions of paragraph (d)(3) of this section.

(iii) State: ''We produce each listed [engine or equipment] model for nonroad application without making any changes that could increase its certified emission levels, as described in 40 CFR 1039.605.''.

(e) *Failure to comply*. If your engines do not meet the criteria listed in paragraph (d) of this section, they will be subject to the standards, requirements, and prohibitions of this part 1039 and the certificate issued under 40 CFR part 86 will not be deemed to also be a certificate issued under this part 1039. Introducing these engines into commerce without a valid exemption or certificate of conformity under this part violates the prohibitions in 40 CFR 1068.101(a)(1).

(f) *Data submission*. We may require you to send us emission test data on any applicable nonroad duty cycles.

(g) *Participation in averaging, banking and trading*. Engines adapted for nonroad use under this section may not generate or use emission credits under this part 1039. These engines may generate credits under the ABT provisions in 40 CFR part 86. These engines must use emission credits under 40 CFR part 86 if they are certified to an FEL that exceeds an applicable standard under 40 CFR part 86.

[69 FR 39213, June 29, 2004, as amended at 70 FR 40463, July 13, 2005; 72 FR 53132, Sept. 18, 2007; 75 FR 22992, Apr. 30, 2010]

§ 1039.610 What provisions apply to vehicles certified under the motor-vehicle program?

(a) *General provisions*. If you are a motor-vehicle manufacturer, this section allows you to introduce new nonroad engines or equipment into commerce if the vehicle is already certified to the requirements that apply under 40 CFR parts 85 and 86 for the appropriate model year. If you comply with all of the provisions of this section, we consider the certificate issued under 40 CFR part 86 for each motor vehicle to also be a valid certificate of conformity for the engine under this part 1039 for its model year, without a separate application for certification under the requirements of this part 1039. See § 1039.605 for similar provisions that apply to motor-vehicle engines produced for nonroad equipment.

(b) *Equipment-manufacturer provisions*. If you are not a motor-vehicle manufacturer, you may produce nonroad equipment from motor vehicles under this section as long as you meet all the requirements and conditions specified in paragraph (d) of this section. You must also add the fuel-inlet label we specify in § 1039.135(e). If you modify the motor vehicle or its engine in any of the ways described in paragraph (d)(2) of this section, we will consider you a manufacturer of a new nonroad engine. Such modifications prevent you from using the provisions of this section.

(c) *Liability*. Engines, vehicles, and equipment for which you meet the requirements of this section are exempt from all the requirements and prohibitions of this part, except for those specified in this section. Engines exempted under this section must meet all the applicable requirements from 40 CFR parts 85 and 86. This applies to engine manufacturers, equipment manufacturers, and all other persons as if the nonroad equipment were motor vehicles. The prohibited acts of 40 CFR 1068.101(a)(1) apply to these new pieces of equipment; however, we consider the certificate issued under 40 CFR part 86 for each motor vehicle to also be a valid certificate of conformity for the engine under this part 1039 for its model year. If we make a determination that these engines, vehicles, or equipment do not conform to the regulations during their useful life, we may require you to recall them under 40 CFR part 86 or 40 CFR 1068.505.

(d) *Specific requirements*. If you are a motor-vehicle manufacturer and meet all the following criteria and requirements regarding your new nonroad equipment and its engine, the engine is eligible for an exemption under this section:

(1) Your equipment must be covered by a valid certificate of conformity as a motor vehicle issued under 40 CFR part 86.

(2) You must not make any changes to the certified vehicle that we could reasonably expect to increase its exhaust emissions for any pollutant, or its evaporative emissions if it is subject to evaporative-emission standards. For example, if you make any of the following changes, you do not qualify for this exemption:

(i) Change any fuel system parameters from the certified configuration.

(ii) Change, remove, or fail to properly install any other component, element of design, or calibration specified in the vehicle manufacturer's application for certification. This includes aftertreatment devices and all related components.

(iii) Modify or design the engine cooling system so that temperatures or heat rejection rates are outside the original vehicle manufacturer's specified ranges.

(iv) Add more than 500 pounds to the curb weight of the originally certified motor vehicle.

(3) You must show that fewer than 50 percent of the engine family's total sales in the United States are used in nonroad applications. This includes any type of vehicle, without regard to which company completes the manufacturing of the nonroad equipment. Show this as follows:

(i) If you are the original manufacturer of the vehicle, base this showing on your sales information.

(ii) In all other cases, you must get the original manufacturer of the vehicle to confirm this based on their sales information.

(4) The equipment must have the vehicle emission control information and fuel labels we require under 40 CFR 86.007–35.

(5) You must add a permanent supplemental label to the equipment in a position where it will remain clearly visible. In the supplemental label, do the following:

(i) Include the heading: ''NONROAD ENGINE EMISSION CONTROL INFORMATION''.

(ii) Include your full corporate name and trademark. You may instead include the full corporate name and trademark of another company you choose to designate.

(iii) State: ''THIS VEHICLE WAS ADAPTED FOR NONROAD USE WITHOUT AFFECTING ITS EMISSION CONTROLS. THE EMISSION-CONTROL SYSTEM DEPENDS ON THE USE OF FUEL MEETING SPECIFICATIONS THAT APPLY FOR MOTOR-VEHICLE APPLICATIONS. OPERATING THE ENGINE ON OTHER FUELS MAY BE A VIOLATION OF FEDERAL LAW.''.

(iv) State the date you finished modifying the vehicle (month and year), if applicable.

(6) The original and supplemental labels must be readily visible in the fully assembled equipment.

(7) Send the Designated Compliance Officer a signed letter by the end of each calendar year (or less often if we tell you) with all the following information:

(i) Identify your full corporate name, address, and telephone number.

(ii) List the equipment models you expect to produce under this exemption in the coming year and describe your basis for meeting the sales restrictions of paragraph (d)(3) of this section.

(iii) State: ''We produced each listed engine or equipment model for nonroad application without making any changes that could increase its certified emission levels, as described in 40 CFR 1039.610.''

(e) *Failure to comply*. If your engines, vehicles, or equipment do not meet the criteria listed in paragraph (d) of this section, the engines will be subject to the standards, requirements, and prohibitions of this part 1039, and the certificate issued under 40 CFR part 86 will not be deemed to also be a certificate issued under this part 1039. Introducing these engines into commerce without a valid exemption or certificate of conformity under this part violates the prohibitions in 40 CFR 1068.101(a)(1).

(f) *Data submission.* We may require you to send us emission test data on any applicable nonroad duty cycles.

(g) *Participation in averaging, banking and trading.* Vehicles adapted for nonroad use under this section may not generate or use emission credits under this part 1039. These vehicles may generate credits under the ABT provisions in 40 CFR part 86. These vehicles must be included in the calculation of the applicable fleet average in 40 CFR part 86.

[69 FR 39213, June 29, 2004, as amended at 70 FR 40463, July 13, 2005; 72 FR 53132, Sept. 18, 2007; 75 FR 22992, Apr. 30, 2010]

§ 1039.615 What special provisions apply to engines using noncommercial fuels?

In § 1039.115(e), we generally require that engines meet emission standards for any adjustment within the full range of any adjustable parameters. For engines that use noncommercial fuels significantly different than the specified test fuel of the same type, you may ask to use the parameter-adjustment provisions of this section instead of those in § 1039.115(e). Engines certified under this section must be in a separate engine family.

(a) If we approve your request, the following provisions apply:

(1) You must certify the engine using the test fuel specified in § 1039.501.

(2) You may produce the engine without limits or stops that keep the engine adjusted within the certified range.

(3) You must specify in-use adjustments different than the adjustable settings appropriate for the specified test fuel, consistent with the provisions of paragraph (b)(1) of this section.

(b) To produce engines under this section, you must do the following:

(1) Specify in-use adjustments needed so the engine's level of emission control for each regulated pollutant is equivalent to that from the certified configuration.

(2) Add the following information to the emission control information label specified in § 1039.135:

(i) Include instructions describing how to adjust the engine to operate in a way that maintains the effectiveness of the emission-control system.

(ii) State: ''THIS ENGINE IS CERTIFIED TO OPERATE IN APPLICATIONS USING NONCOMMERCIAL FUEL. MALADJUSTMENT OF THE ENGINE IS A VIOLATION OF FEDERAL LAW SUBJECT TO CIVIL PENALTY.''.

(3) Keep records to document the destinations and quantities of engines produced under this section.

§ 1039.620 What are the provisions for exempting engines used solely for competition?

The provisions of this section apply for new engines built on or after January 1, 2006.

(a) Equipment manufacturers may use uncertified engines if the vehicles or equipment in which they are installed will be used solely for competition.

(b) The definition of nonroad engine in 40 CFR 1068.30 excludes engines used solely for competition. These engines are not required to comply with this part 1039 or 40 CFR part 89, but 40 CFR 1068.101 prohibits the use of competition engines for noncompetition purposes.

(c) We consider a vehicle or piece of equipment to be one that will be used solely for competition if it has features that are not easily removed that would make its use other than in competition unsafe, impractical, or highly unlikely.

(d) As an engine manufacturer, your engine is exempt without our prior approval if you have a written request for an exempted engine from the equipment manufacturer showing the basis for believing that the equipment will be used solely for competition. You must permanently label engines exempted under this section to clearly indicate that they are to be used solely for competition. Failure to properly label an engine will void the exemption.

(e) We may discontinue an exemption under this section if we find that engines are not used solely for competition.

§ 1039.625 What requirements apply under the program for equipment-manufacturer flexibility?

The provisions of this section allow equipment manufacturers to produce

equipment with engines that are subject to less stringent emission standards after the Tier 4 emission standards begin to apply. To be eligible to use these provisions, you must follow all the instructions in this section. *See* 40 CFR 89.102(d) and (e) for provisions that apply to equipment produced while Tier 1, Tier 2, or Tier 3 standards apply. *See* § 1039.626 for requirements that apply specifically to companies that manufacture equipment outside the United States and to companies that import such equipment without manufacturing it. Engines and equipment you produce under this section are exempt from the prohibitions in 40 CFR 1068.101(a)(1), subject to the provisions of this section.

(a) *General*. If you are an equipment manufacturer, you may introduce into commerce in the United States limited numbers of nonroad equipment with engines exempted under this section. You may use the exemptions in this section only if you have primary responsibility for designing and manufacturing equipment and your manufacturing procedures include installing some engines in this equipment. Consider all U.S.-directed equipment sales in showing that you meet the requirements of this section, including those from any parent or subsidiary companies and those from any other companies you license to produce equipment for you. If you produce a type of equipment that has more than one engine, count each engine separately. These provisions are available over the following periods:

(1) These provisions are available for the years shown in the following table, except as provided in paragraph (a)(2) of this section:

TABLE 1 OF § 1039.625—GENERAL AVAILABILITY OF ALLOWANCES

Power category	Calendar years
kW < 19	2008–2014
19 ≤ kW < 56	2008–2014
56 ≤ kW < 130	2012–2018
130 ≤ kW ≤ 560	2011–2017
kW > 560	2011–2017

(2) If you do not use any allowances in a power category before the earliest dates shown in the following table, you may delay the start of the seven-year period for using allowances under this section as follows:

TABLE 2 OF § 1039.625—AVAILABILITY OF DELAYED ALLOWANCES

Power category	Calendar years
kW < 19	
19 ≤ kW < 56	2012–2018
56 ≤ kW < 130	2014–2020
130 ≤ kW ≤ 560	2014–2020
kW > 560	2015–2021

(b) *Allowances*. You may choose one of the following options for each power category to produce equipment with exempted engines under this section, except as allowed under § 1039.627:

(1) *Percent-of-production allowances*. You may produce a certain number of units with exempted engines calculated using a percentage of your total sales within a power category relative to your total U.S.-directed production volume. The sum of these percentages within a power category during the seven-year period specified in paragraph (a) of this section may not exceed 80 percent, except as allowed under paragraph (b)(2) or (m) of this section.

(2) *Small-volume allowances*. You may determine an alternate allowance for a specific number of exempted engines under this section using one of the following approaches for your U.S.-directed production volumes:

(i) You may produce up to 700 units with exempted engines within a power category during the seven-year period specified in paragraph (a) of this section, with no more than 200 units in any single year within a power category, except as provided in paragraph (m) of this section. Engines within a power category that are exempted under this section must be from a single engine family within a given year.

(ii) For engines below 130 kW, you may produce up to 525 units with exempted engines within a power category during the seven-year period specified in paragraph (a) of this section, with no more than 150 units in any single year within a power category, except as provided in paragraph (m) of this section. For engines at or above 130 kW, you may produce up to 350 units with exempted engines within a power category during the seven-year

period, with no more than 100 units in any single year within a power category. Exemptions under this paragraph (b)(2)(ii) may apply to engines from multiple engine families in a given year.

(iii) In each power category at or above 56 kW, you may apply the provisions of paragraph (b)(2)(i) of this section in the first two model years for which Tier 4 standards apply, regardless of the number of engine families you use in your equipment, provided you exceed the single engine family restriction of that paragraph primarily due to production of equipment intended specifically to travel on snow and to commonly operate at more than 9,000 feet above sea level. After the first two Tier 4 model years in a power category, you may continue to apply the provisions of paragraph (b)(2)(i) of this section, subject to the single engine family restriction.

(c) *Percentage calculation.* Calculate for each calendar year the percentage of equipment with exempted engines from your total U.S.-directed production within a power category if you need to show that you meet the percent-of-production allowances in paragraph (b)(1) of this section.

(d) *Inclusion of engines not subject to Tier 4 standards.* The following provisions apply to engines that are not subject to Tier 4 standards:

(1) If you use the provisions of 40 CFR 1068.105(a) to use up your inventories of engines not certified to new emission standards, do not include these units in your count of equipment with exempted engines under paragraph (b) of this section. However, you may include these units in your count of total equipment you produce for the given year for the percentage calculation in paragraph (b)(1) of this section.

(2) If you install engines that are exempted from the Tier 4 standards for any reason, other than for equipment-manufacturer allowances under this section, do not include these units in your count of exempted engines under paragraph (b) of this section. However, you may include these units in your count of total equipment you produce for the given year for the percentage calculation in paragraph (b)(1) of this section. For example, if we grant a hardship exemption for the engine manufacturer, you may count these as compliant engines under this section. This paragraph (d)(2) applies only if the engine has a permanent label describing why it is exempted from the Tier 4 standards.

(3) Do not include equipment using model year 2008 or 2009 engines certified under the provisions of §1039.101(c) in your count of equipment using exempted engines. However, you may include these units in your count of total equipment you produce for the given year for the percentage calculation in paragraph (b)(1) of this section.

(4) You may start using the allowances under this section for engines that are not yet subject to Tier 4 standards, as long as the seven-year period for using allowances under the Tier 2 or Tier 3 program has expired (see 40 CFR 89.102(d)). Table 3 of this section shows the years for which this applies. To use these early allowances, you must use engines that meet the emission standards described in paragraph (e) of this section. You must also count these units or calculate these percentages as described in paragraph (c) of this section and apply them toward the total number or percentage of equipment with exempted engines we allow for the Tier 4 standards as described in paragraph (b) of this section. The maximum number of cumulative early allowances under this paragraph (d)(4) is 10 percent under the percent-of-production allowance or 100 units under the small-volume allowance. For example, if you produce 5 percent of your equipment with engines between 130 and 560 kW that use allowances under this paragraph (d)(4) in 2009, you may use up to an additional 5 percent of your allowances in 2010. If you use allowances for 5 percent of your equipment in both 2009 and 2010, your 80 percent allowance for 2011–2017 in the 130–560 kW power category decreases to 70 percent. Manufacturers using allowances under this paragraph (d)(4) must comply with the notification and reporting requirements specified in paragraph (g) of this section.

TABLE 3 OF § 1039.625—YEARS FOR EARLY ALLOWANCES

Maximum engine power	Calendar years
kW < 19	2007
19 ≤ kW < 37	2006–2011
37 ≤ kW < 56	2011
56 ≤ kW < 75	2011
75 ≤ kW < 130	2010–2011
130 ≤ kW < 225	2010
225 ≤ kW < 450	2008–2010
450 ≤ kW ≤ 560	2009–2010
KW > 560	

(e) *Standards*. If you produce equipment with exempted engines under this section, the engines must meet emission standards specified in this paragraph (e). Note that we consider engines to be meeting emission standards even if they are certified with a family emission limit that is higher than the emission standard that would otherwise apply.

(1) If you are using the provisions of paragraph (d)(4) of this section, engines must meet the applicable Tier 1 or Tier 2 emission standards described in § 89.112.

(2) If you are using the provisions of paragraph (a)(2) of this section, engines must be certified under this part 1039 as follows:

Engines in the following power category . . .	Must meet all standards and requirements that applied in the following model year . . .
(i) 19 ≤ kW < 56	2008
(ii) 56 ≤ kW < 130	2012
(iii) 130 ≤ kW ≤ 560	2011
(iv) kW > 560	2011

(3) In all other cases, engines at or above 56 kW and at or below 560 kW must meet the appropriate Tier 3 standards described in 40 CFR 89.112. Engines below 56 kW and engines above 560 kW must meet the appropriate Tier 2 standards described in 40 CFR 89.112.

(f) *Equipment labeling*. You must add a permanent label, written legibly in English, to the engine or another readily visible part of each piece of equipment you produce with exempted engines under this section. This label, which supplements the engine manufacturer's emission control information label, must include at least the following items:

(1) The label heading ''EMISSION CONTROL INFORMATION''.

(2) Your corporate name and trademark.

(3) The calendar year in which the equipment is manufactured.

(4) An e-mail address and phone number to contact for further information, or a Web site that includes this contact information.

(5) The following statement:

THIS EQUIPMENT [or identify the type of equipment] HAS AN ENGINE THAT MEETS U.S. EPA EMISSION STANDARDS UNDER 40 CFR 1039.625.

(g) *Notification and reporting*. You must notify us of your intent to use the provisions of this section and send us an annual report to verify that you are not exceeding the allowances, as follows:

(1) Before you use the provisions of this section, send the Designated Compliance Officer a written notice of your intent, including:

(i) Your company's name and address, and your parent company's name and address, if applicable.

(ii) The name, phone number and e-mail address of a person to contact for more information.

(iii) The calendar years in which you expect to use the exemption provisions of this section.

(iv) The name and address of each company you expect to produce engines for the equipment you manufacture under this section.

(v) Your best estimate of the number of units in each power category you will produce under this section and whether you intend to comply under paragraph (b)(1) or (b)(2) of this section.

(vi) The number of units in each power category you have sold in previous calendar years under 40 CFR 89.102(d).

(2) For each year that you use the provisions of this section, send the Designated Compliance Officer a written report by March 31 of the following year. Identify the following things in your report:

(i) The total count of units you sold in the preceding year for each power category, based on actual U.S.-directed production information.

(ii) The percentages of U.S.-directed production that correspond to the number of units in each power category and the cumulative numbers and percentages of units for all the units you have sold under this section for each power category. You may omit the percentage figures if you include in the report a statement that you will not be using the percent-of-production allowances in paragraph (b)(1) of this section.

(iii) The manufacturer of the engine installed in the equipment you produce under this section if this is different than you specified under paragraph (g)(1)(iv) of this section.

(h) *Recordkeeping*. Keep the following records of all equipment with exempted engines you produce under this section for at least five full years after the final year in which allowances are available for each power category:

(1) The model number, serial number, and the date of manufacture for each engine and piece of equipment.

(2) The maximum power of each engine.

(3) The total number or percentage of equipment with exempted engines, as described in paragraph (b) of this section and all documentation supporting your calculation.

(4) The notifications and reports we require under paragraph (g) of this section.

(i) *Enforcement*. Producing more exempted engines or equipment than we allow under this section or installing engines that do not meet the emission standards of paragraph (e) of this section violates the prohibitions in 40 CFR 1068.101(a)(1). You must give us the records we require under this section if we ask for them (*see* 40 CFR 1068.101(a)(2)).

(j) *Provisions for engine manufacturers*. As an engine manufacturer, you may produce exempted engines as needed under this section. You do not have to request this exemption for your engines, but you must have written assurance from equipment manufacturers that they need a certain number of exempted engines under this section. Send us an annual report of the engines you produce under this section, as described in §1039.250(a). For engines produced under the provisions of paragraph (a)(2) of this section, you must certify the engines under this part 1039. For all other exempt engines, the engines must meet the emission standards in paragraph (e) of this section and you must meet all the requirements of 40 CFR 1068.265. If you show under 40 CFR 1068.265(c) that the engines are identical in all material respects to engines that you have previously certified to one or more FELs above the standards specified in paragraph (e) of this section, you must supply sufficient credits for these engines. Calculate these credits under subpart H of this part using the previously certified FELs and the alternate standards. You must meet the labeling requirements in 40 CFR 89.110 or §1039.135, as applicable, with the following exceptions:

(1) Add the following statement instead of the compliance statement in 40 CFR 89.110(b)(10) or §1039.135(c)(12), as applicable:

THIS ENGINE MEETS U.S. EPA EMISSION STANDARDS UNDER 40 CFR 1039.625. SELLING OR INSTALLING THIS ENGINE FOR ANY PURPOSE OTHER THAN FOR THE EQUIPMENT FLEXIBILITY PROVISIONS OF 40 CFR 1039.625 MAY BE A VIOLATION OF FEDERAL LAW SUBJECT TO CIVIL PENALTY.

(2) You may omit the family emission limits if they are below the emission standards.

(k) *Other exemptions*. *See* 40 CFR 1068.255 for exemptions based on hardship for equipment manufacturers and secondary engine manufacturers.

(l) [Reserved]

(m) *Additional exemptions for technical or engineering hardship*. You may request additional engine allowances under paragraph (b)(1) of this section for 19–560 kW power categories or, if you are a small equipment manufacturer, under paragraph (b)(2) of this section for engines at or above 19 and below 37 kW. However, you may use these extra allowances only for those equipment models for which you, or an affiliated company, do not also produce the engine. After considering the circumstances, we may permit you to introduce into commerce equipment with such engines that do not comply with Tier 4 emission standards, as follows:

(1) We may approve additional exemptions if extreme and unusual circumstances that are clearly outside your control and that could not have been avoided with reasonable discretion have resulted in technical or engineering problems that prevent you from meeting the requirements of this part. You must show that you exercised prudent planning and have taken all reasonable steps to minimize the scope of your request for additional allowances.

(2) To apply for exemptions under this paragraph (m), send the Designated Compliance Officer a written request as soon as possible before you are in violation. In your request, include the following information:

(i) Describe your process for designing equipment.

(ii) Describe how you normally work cooperatively or concurrently with your engine supplier to design products.

(iii) Describe the engineering or technical problems causing you to request the exemption and explain why you have not been able to solve them. Describe the extreme and unusual circumstances that led to these problems and explain how they were unavoidable.

(iv) Describe any information or products you received from your engine supplier related to equipment design—such as written specifications, performance data, or prototype engines—and when you received it.

(v) Compare the design processes of the equipment model for which you need additional exemptions and that for other models for which you do not need additional exemptions. Explain the technical differences that justify your request.

(vi) Describe your efforts to find and use other compliant engines, or otherwise explain why none is available.

(vii) Describe the steps you have taken to minimize the scope of your request.

(viii) Include other relevant information. You must give us other relevant information if we ask for it.

(ix) Estimate the increased percent of production you need for each equipment model covered by your request, as described in paragraph (m)(3) of this section. Estimate the increased number of allowances you need for each equipment model covered by your request, as described in paragraph (m)(4) of this section.

(3) We may approve your request to increase the allowances under paragraph (b)(1) of this section, subject to the following limitations:

(i) The additional allowances will not exceed 70 percent for each power category.

(ii) You must use up the allowances under paragraph (b)(1) of this section before using any additional allowance under this paragraph (m).

(iii) Any allowances we approve under this paragraph (m)(3) expire 24 months after the provisions of this section start for a given power category, as described in paragraph (a) of this section. You may use these allowances only for the specific equipment models covered by your request.

(4) We may approve your request to increase the allowances for the 19–56 kW power category under paragraph (b)(2) of this section, subject to the following limitations:

(i) You are eligible for additional allowances under this paragraph (m)(4) only if you are a small equipment manufacturer and you do not use the provisions of paragraph (m)(3) of this section to obtain additional allowances for the 19–56 kW power category.

(ii) You must use up all the available allowances for the 19–56 kW power category under paragraph (b)(2) of this section in a given year before using any additional allowances under this paragraph (m)(4).

(iii) Base your request only on equipment you produce with engines at or above 19 kW and below 37 kW. You may use any additional allowances only for equipment you produce with engines at or above 19 kW and below 37 kW.

(iv) The total allowances under either paragraph (b)(2)(i) or (ii) of this section for the 19–56 kW power category will not exceed 1,100 units.

(v) Any allowances we approve under this paragraph (m)(4) expire 36 months after the provisions of this section start for this power category, as described in paragraph (a) of this section. These additional allowances are not subject to the annual limits specified

in paragraph (b)(2) of this section. You may use these allowances only for the specific equipment models covered by your request.

(5) For purposes of this paragraph (m), *small equipment manufacturer* means a small-business equipment manufacturer that had annual U.S.-directed production volume of equipment using nonroad diesel engines between 19 and 56 kW of no more than 3,000 units in 2002 and all earlier calendar years, and has 750 or fewer employees (500 or fewer employees for nonroad equipment manufacturers that produce no construction equipment or industrial trucks). For manufacturers owned by a parent company, the production limit applies to the production of the parent company and all its subsidiaries and the employee limit applies to the total number of employees of the parent company and all its subsidiaries.

[69 FR 39213, June 29, 2004, as amended at 70 FR 40464, July 13, 2005; 72 FR 53133, Sept. 18, 2007; 73 FR 59191, Oct. 8, 2008; 75 FR 68461, Nov. 8, 2010]

§ 1039.626 What special provisions apply to equipment imported under the equipment-manufacturer flexibility program?

This section describes requirements that apply to equipment manufacturers using the provisions of § 1039.625 for equipment produced outside the United States. Note that § 1039.625 limits these provisions to equipment manufacturers that install some engines and have primary responsibility for designing and manufacturing equipment. Companies that import equipment into the United States without meeting these criteria are not eligible for these allowances. Such importers may import equipment with exempted engines only as described in paragraph (b) of this section.

(a) As a foreign equipment manufacturer, you or someone else may import equipment with exempted engines under this section if you comply with the provisions in § 1039.625 and commit to the following:

(1) Give any EPA inspector or auditor complete and immediate access to inspect and audit, as follows:

(i) Inspections and audits may be announced or unannounced.

(ii) Inspections and audits may be by EPA employees or EPA contractors.

(iii) You must provide access to any location where—

(A) Any nonroad engine, equipment, or vehicle is produced or stored.

(B) Documents related to manufacturer operations are kept.

(C) Equipment, engines, or vehicles are tested or stored for testing.

(iv) You must provide any documents requested by an EPA inspector or auditor that are related to matters covered by the inspections or audit.

(v) EPA inspections and audits may include review and copying of any documents related to demonstrating compliance with the exemptions in § 1039.625.

(vi) EPA inspections and audits may include inspection and evaluation of complete or incomplete equipment, engines, or vehicles, and interviewing employees.

(vii) You must make any of your employees available for interview by the EPA inspector or auditor, on request, within a reasonable time period.

(viii) You must provide English language translations of any documents to an EPA inspector or auditor, on request, within 10 working days.

(ix) You must provide English-language interpreters to accompany EPA inspectors and auditors, on request.

(2) Name an agent for service located in the United States. Service on this agent constitutes service on you or any of your officers or employees for any action by EPA or otherwise by the United States related to the requirements of this part.

(3) The forum for any civil or criminal enforcement action related to the provisions of this section for violations of the Clean Air Act or regulations promulgated thereunder shall be governed by the Clean Air Act.

(4) The substantive and procedural laws of the United States shall apply to any civil or criminal enforcement action against you or any of your officers or employees related to the provisions of this section.

(5) Provide the notification required by § 1039.625(g). Include in the notice of intent in § 1039.625(g)(1) a commitment to comply with the requirements and

obligations of § 1039.625 and this section. This commitment must be signed by the owner or president.

(6) You, your agents, officers, and employees must not seek to detain or to impose civil or criminal remedies against EPA inspectors or auditors, whether EPA employees or EPA contractors, for actions performed within the scope of EPA employment related to the provisions of this section.

(7) By submitting notification of your intent to use the provisions of § 1039.625, producing and exporting for resale to the United States nonroad equipment under this section, or taking other actions to comply with the requirements of this part, you, your agents, officers, and employees, without exception, become subject to the full operation of the administrative and judicial enforcement powers and provisions of the United States as described in 28 U.S.C. 1605(a)(2), without limitation based on sovereign immunity, for conduct that violates the requirements applicable to you under this part 1039—including such conduct that violates 18 U.S.C. 1001, 42 U.S.C. 7413(c)(2), or other applicable provisions of the Clean Air Act'with respect to actions instituted against you and your agents, officers, and employees in any court or other tribunal in the United States.

(8) Any report or other document you submit to us must be in the English language, or include a complete translation in English.

(9) You must post a bond to cover any potential enforcement actions under the Clean Air Act before you or anyone else imports your equipment under this section, as follows:

(i) The value of the bond is based on the per-engine bond values shown in Table 1 of this section and on the highest number of engines in each power category you produce in any single calendar year under the provisions of § 1039.625. For example, if you have projected U.S.-directed production volumes of 100 exempt engines in the 19–56 kW power category and 300 exempt engines in the 56–130 kW power category in 2013, the appropriate bond amount is $180,000. If your estimated or actual engine imports increase beyond the level appropriate for your current bond payment, you must post additional bond to reflect the increased sales within 90 days after you change your estimate or determine the actual sales. You may not decrease your bond.

(ii) You may meet the bond requirements of this section with any of the following methods:

(A) Get a bond from a third-party surety that is cited in the U.S. Department of Treasury Circular 570, ''Companies Holding Certificates of Authority as Acceptable Sureties on Federal Bonds and as Acceptable Reinsuring Companies.'' Maintain this bond for five years after the applicable allowance period expires, or five years after you use up all the available allowances under § 1039.625, whichever comes first.

(B) Get us to approve a waiver from the bonding requirement if you can show that you meet the asset thresholds described in 40 CFR 1054.690.

(iii) If you forfeit some or all of your bond in an enforcement action, you must post any appropriate bond for continuing importation within 90 days after you forfeit the bond amount.

TABLE 1 OF § 1039.626—PER-ENGINE BOND VALUES

For engines with maximum engine power falling in the following ranges . . .	The per-engine bond value is . . .
kW < 19	$150
19 ≤ kW < 56	300
56 ≤ kW < 130	500
130 ≤ kW < 225	1,000
225 ≤ kW < 450	3,000
kW ≥ 450	8,000

(iv) You will forfeit the proceeds of the bond posted under this section if you need to satisfy any U.S. administrative settlement agreement, administrative final order or judicial judgment against you arising from your violation of this chapter, or violation of 18 U.S.C. 1001, 42 U.S.C. 7413(c)(2), or other applicable provisions of the Clean Air Act.

(b) The provisions of this paragraph (b) apply to importers that do not install engines into equipment and do not have primary responsibility for designing and manufacturing equipment. Such importers may import equipment with engines exempted under § 1039.625 only if each engine is exempted under an allowance provided to an equipment

manufacturer meeting the requirements of § 1039.625 and this section. You must notify us of your intent to use the provisions of this section and send us an annual report, as follows:

(1) Before you use the provisions of this section, send the Designated Compliance Officer a written notice of your intent, including:

(i) Your company's name and address, and your parent company's name and address, if applicable.

(ii) The name and address of the companies that produce the equipment and engines you will be importing under this section.

(iii) Your best estimate of the number of units in each power category you will import under this section in the upcoming calendar year, broken down by equipment manufacturer and power category.

(iv) The number of units in each power category you have imported in previous calendar years under 40 CFR 89.102(d).

(2) For each year that you use the provisions of this section, send the Designated Compliance Officer a written report by March 31 of the following year. Include in your report the total number of engines you imported under this section in the preceding calendar year, broken down by engine manufacturer and by equipment manufacturer.

[69 FR 39213, June 29, 2004, as amended at 73 FR 59192, Oct. 8, 2008]

§ 1039.627 What are the incentives for equipment manufacturers to use cleaner engines?

This section allows equipment manufacturers to generate additional allowances under the provisions of § 1039.625 by producing equipment using engines at or above 19 kW certified to specified levels earlier than otherwise required.

(a) For early-compliant engines to generate offsets for use under this section, the following general provisions apply:

(1) The engine manufacturer must comply with the provisions of § 1039.104(a)(1) for the offset-generating engines.

(2) Engines you install in your equipment after December 31 of the years specified in § 1039.104(a)(1) do not generate allowances under this section, even if the engine manufacturer generated offsets for that engine under § 1039.104(a).

(3) Offset-generating engines must be certified to the following standards under this part 1039:

If the engine's maximum power is . . .	And you install . . .	Certified early to the . . .	You may reduce the number of engines in the same power category that are required to meet the . . .	In later model years by . . .
(i) kW ≥ 19	One engine	Emissions standards in § 1039.101	Standards in Tables 2 through 7 of § 1039.102 or in § 1039.101.	One engine.
(ii) 56 ≤ kW < 130	Two engines	NO_X standards in § 1039.102(e)(1), and NMHC standard of 0.19 g/kW-hr, a PM standard of 0.02 g/kW-hr, and a CO standard of 5.0 g/kW-hr.	Standards in Tables 2 through 7 of § 1039.102 or in § 1039.101.	One engine.
(iii) 130 ≤ kW < 560	Two engines	NO_X standards in § 1039.102(e)(2), an NMHC standard of 0.19 g/kW-hr, a PM standard of 0.02 g/kW-hr, and a CO standard of 3.5 g/kW-hr.	Standards in Tables 2 through 7 of § 1039.102 or in § 1039.101.	One engine.

(b) *Using engine offsets*. (1) You may use engine offsets generated under paragraph (a) of this section to generate additional allowances under § 1039.625, as follows:

(i) For each engine offset, you may increase the number of available allowances under § 1039.625(b) for that power category by one engine for the years indicated.

(ii) For engines in 56–560 kW power categories, you may transfer engine offsets across power categories within this power range. Calculate the number of additional allowances by scaling the number of generated engine offsets according to the ratio of engine power for

offset and allowance engines. Make this calculation for all your offset engines for which you will transfer offsets under this paragraph (b)(1)(ii), then round the result to determine the total number of available power-weighted allowances. For example, if you generate engine offsets for 75 500-kW engines, you may generate up to 37,500 kW-engines of power-weighted allowances. You may apply this to 375 100-kW engines or any other combination that totals 37,500 kW-engines.

(2) You may decline to use the offsets. If you decline, the engine manufacturer may use the provisions of § 1039.104(a)(1).

(c) *Limitation on offsets for engines above 560 kW.* For engines above 560 kW, you must track how many engines you install in generator sets and how many you install in other applications under the provisions of this section. Offsets from generator-set engines may be used only for generator-set engines. Offsets from engines for other applications may be used only for other applications besides generator sets.

(d) *Reporting.* When you submit your first annual report under § 1039.625(g), include the following additional information related to the engines you use to generate offsets under this section:

(1) The name of each engine family involved.

(2) The number of engines from each power category.

(3) The maximum engine power of each engine.

(4) For engines above 560 kW, whether you use engines certified to the standards for generator-set engines.

(e) *In-use fuel.* If the engine manufacturer certifies using ultra low-sulfur diesel fuel, you must take steps to ensure that the in-use engines in the family will use diesel fuel with a sulfur concentration no greater than 15 ppm. For example, selling equipment only into applications where the operator commits to a central-fueling facility with ultra low-sulfur diesel fuel throughout its lifetime would meet this requirement.

[69 FR 39213, June 29, 2004, as amended at 75 FR 22992, Apr. 30, 2010]

§ 1039.630 What are the economic hardship provisions for equipment manufacturers?

If you qualify for the economic hardship provisions specified in 40 CFR 1068.255, we may approve your hardship application subject to the following additional conditions:

(a) You must show that you have used up the allowances to produce equipment with exempted engines under § 1039.625.

(b) You may produce equipment under this section for up to 12 months total (or 24 months total for small-volume manufacturers).

§ 1039.635 What are the hardship provisions for engine manufacturers?

If you qualify for the hardship provisions specified in 40 CFR 1068.245, we may approve a period of delayed compliance for up to one model year total (or two model years total for small-volume manufacturers). If you qualify for the hardship provisions specified in 40 CFR 1068.250 for small-volume manufacturers, we may approve a period of delayed compliance for up to two model years total.

§ 1039.640 What special provisions apply to branded engines?

The following provisions apply if you identify the name and trademark of another company instead of your own on your emission control information label, as provided by § 1039.135(c)(2):

(a) You must have a contractual agreement with the other company that obligates that company to take the following steps:

(1) Meet the emission warranty requirements that apply under § 1039.120. This may involve a separate agreement involving reimbursement of warranty-related expenses.

(2) Report all warranty-related information to the certificate holder.

(b) In your application for certification, identify the company whose trademark you will use and describe the arrangements you have made to meet your requirements under this section.

(c) You remain responsible for meeting all the requirements of this chapter, including warranty and defect-reporting provisions.

§ 1039.645 What special provisions apply to engines used for transportation refrigeration units?

Manufacturers may choose to use the provisions of this section for engines used in transportation refrigeration units (TRUs). The operating restrictions and characteristics in paragraph (f) of this section define engines that are not used in TRUs. All provisions of this part apply for TRU engines, except as specified in this section.

(a) You may certify engines under this section with the following special provisions:

(1) The engines are not subject to the transient emission standards of subpart B of this part.

(2) The steady-state emission standards in subpart B of this part apply for emissions measured over the steady-state test cycle described in paragraph (b) of this section instead of the otherwise applicable duty cycle described in § 1039.505.

(b) Measure steady-state emissions using the procedures specified in § 1039.505, except for the duty cycles, as follows:

(1) The following duty cycle applies for discrete-mode testing:

TABLE 1 OF § 1039.645—DISCRETE-MODE CYCLE FOR TRU ENGINES

Mode number	Engine speed [1]	Torque (percent) [2]	Weighting factors
1	Maximum test speed	75	0.25
2	Maximum test speed	50	0.25
3	Intermediate test speed	75	0.25
4	Intermediate test speed	50	0.25

[1] Speed terms are defined in 40 CFR part 1065.
[2] The percent torque is relative to the maximum torque at the given engine speed.

(2) The following duty cycle applies for ramped-modal testing:

TABLE 2 OF § 1039.645—RAMPED-MODAL CYCLE FOR TRU ENGINES

RMC mode	Time in mode (seconds)	Engine speed [1]	Torque (percent) [2,3]
1a Steady-state	290	Intermediate Speed	75.
1b Transition	20	Intermediate Speed	Linear Transition.
2a Steady-state	280	Intermediate Speed	50.
2b Transition	20	Linear Transition	Linear Transition.
3a Steady-state	280	Maximum Test Speed	75.
3b Transition	20	Maximum Test Speed	Linear Transition.
4 Steady-state	290	Maximum Test Speed	50

[1] Speed terms are defined in 40 CFR part 1065.
[2] The percent torque is relative to the maximum torque at the commanded engine speed.
[3] Advance from one mode to the next within a 20-second transition phase. During the transition phase, command a linear progression from the torque setting of the current mode to the torque setting of the next mode, and simultaneously command a similar linear progression for engine speed if there is a change in speed setting.

(c) Engines certified under this section must be certified in a separate engine family that contains only TRU engines.

(d) You must do the following for each engine certified under this section:

(1) State on the emission control information label: ''THIS ENGINE IS CERTIFIED TO OPERATE ONLY IN TRANSPORTATION REFRIGERATION UNITS. INSTALLING OR USING THIS ENGINE IN ANY OTHER APPLICATION MAY BE A VIOLATION OF FEDERAL LAW SUBJECT TO CIVIL PENALTY.''.

(2) State in the emission-related installation instructions all steps necessary to ensure that the engine will operate only in the modes covered by the test cycle described in this section.

(3) Keep records to document the destinations and quantities of engines produced under this section.

(e) All engines certified under this section must comply with NTE standards, as described in § 1039.101 or

§ 1039.102 for the applicable model year, except that the NTE standards are not limited with respect to operating speeds and loads. In your application for certification, certify that all the engines in the engine family comply with the not-to-exceed emission standards for all normal operation and use. The deficiency provisions of § 1039.104(d) do not apply to these engines. This paragraph (e) applies whether or not the engine would otherwise be subject to NTE standards.

(f) An engine is not considered to be used in a TRU if any of the following is true:

(1) The engine is installed in any equipment other than refrigeration units for railcars, truck trailers, or other freight vehicles.

(2) The engine operates in any mode not covered by the test cycle described in this section, except as follows:

(i) The engine may operate briefly at idle. Note, however, that TRU engines must meet NTE emission standards under any type of operation, including idle, as described in paragraph (e) of this section.

(ii) The engine may have a minimal amount of transitional operation between two allowable modes. As an example, a thirty-second transition period would clearly not be considered minimal.

(iii) The engine as installed may experience up to a 2-percent decrease in load at a given setpoint over any 10-minute period, and up to a 15-percent decrease in load at a given setpoint over any 60-minute period.

(3) The engine is sold in a configuration that allows the engine to operate in any mode not covered by the test cycle described in this section. For example, this section does not apply to an engine sold without a governor limiting operation only to those modes covered by the test cycle described in this section.

(4) The engine is subject to Tier 3 or earlier standards, or phase-out Tier 4 standards.

[69 FR 39213, June 29, 2004, as amended at 73 FR 37241, June 30, 2008]

§ 1039.650 [Reserved]

§ 1039.655 What special provisions apply to engines sold in Guam, American Samoa, or the Commonwealth of the Northern Mariana Islands?

(a) The prohibitions in § 1068.101(a)(1) do not apply to an engine if the following conditions are met:

(1) The engine is intended for use and will be used in Guam, American Samoa, or the Commonwealth of the Northern Mariana Islands.

(2) The engine meets the latest applicable emission standards in 40 CFR 89.112.

(3) You meet all the requirements of 40 CFR 1068.265.

(b) If you introduce an engine into commerce in the United States under this section, you must meet the labeling requirements in 40 CFR 89.110, but add the following statement instead of the compliance statement in 40 CFR 89.110(b)(10):

THIS ENGINE DOES NOT COMPLY WITH U.S. EPA TIER 4 EMISSION REQUIREMENTS. IMPORTING THIS ENGINE INTO THE UNITED STATES OR ANY TERRITORY OF THE UNITED STATES EXCEPT GUAM, AMERICAN SAMOA, OR THE COMMONWEALTH OF THE NORTHERN MARIANA ISLANDS MAY BE A VIOLATION OF FEDERAL LAW SUBJECT TO CIVIL PENALTY.

(c) Introducing into commerce an engine exempted under this section in any state or territory of the United States other than Guam, American Samoa, or the Commonwealth of the Northern Mariana Islands, throughout its lifetime, violates the prohibitions in 40 CFR 1068.101(a)(1), unless it is exempt under a different provision.

[69 FR 39213, June 29, 2004, as amended at 70 FR 40464, July 13, 2005]

§ 1039.660 What special provisions apply to Independent Commercial Importers?

Under § 1039.801, certain engines are considered to be new engines when they are imported into the United States, even if they have previously been used outside the country. Independent Commercial Importers may use the provisions of 40 CFR part 89,

subpart G, and 40 CFR 89.906(b) to receive a certificate of conformity for engines meeting all the requirements of this part 1039.

Subpart H—Averaging, Banking, and Trading for Certification

§ 1039.701 General provisions.

(a) You may average, bank, and trade (ABT) emission credits for purposes of certification as described in this subpart to show compliance with the standards of this part. Participation in this program is voluntary.

(b) Section 1039.740 restricts the use of emission credits to certain averaging sets.

(c) The definitions of Subpart I of this part apply to this subpart. The following definitions also apply:

(1) *Actual emission credits* means emission credits you have generated that we have verified by reviewing your final report.

(2) *Averaging set* means a set of engines in which emission credits may be exchanged only with other engines in the same averaging set.

(3) *Broker* means any entity that facilitates a trade of emission credits between a buyer and seller.

(4) *Buyer* means the entity that receives emission credits as a result of a trade.

(5) *Reserved emission credits* means emission credits you have generated that we have not yet verified by reviewing your final report.

(6) *Seller* means the entity that provides emission credits during a trade.

(7) *Standard* means the emission standard that applies under subpart B of this part for engines not participating in the ABT program of this subpart.

(8) *Trade* means to exchange emission credits, either as a buyer or seller.

(d) You may not use emission credits generated under this subpart to offset any emissions that exceed an FEL or standard. This applies for all testing, including certification testing, in-use testing, selective enforcement audits, and other production-line testing. However, if emissions from an engine exceed an FEL or standard (for example, during a selective enforcement audit), you may use emission credits to recertify the engine family with a higher FEL that applies only to future production.

(e) Engine families that use emission credits for one or more pollutants may not generate positive emission credits for another pollutant.

(f) Emission credits may be used in the model year they are generated or in future model years. Emission credits may not be used for past model years.

(g) You may increase or decrease an FEL during the model year by amending your application for certification under § 1039.225. The new FEL may apply only to engines you have not already introduced into commerce. Each engine's emission control information label must include the applicable FELs.

§ 1039.705 How do I generate and calculate emission credits?

The provisions of this section apply separately for calculating emission credits for NO_X, NO_X+NMHC, or PM.

(a) [Reserved]

(b) For each participating family, calculate positive or negative emission credits relative to the otherwise applicable emission standard. Calculate positive emission credits for a family that has an FEL below the standard. Calculate negative emission credits for a family that has an FEL above the standard. Sum your positive and negative credits for the model year before rounding. Round the sum of emission credits to the nearest kilogram (kg), using consistent units throughout the following equation:

$$\text{Emission credits (kg)} = (\text{Std} - \text{FEL}) \times (\text{Volume}) \times (\text{AvgPR}) \times (\text{UL}) \times (10^{-3})$$

Where:

Std = the emission standard, in grams per kilowatt-hour, that applies under subpart B of this part for engines not participating in the ABT program of this subpart (the ''otherwise applicable standard'').

FEL = the family emission limit for the engine family, in grams per kilowatt-hour.

Volume = the number of engines eligible to participate in the averaging, banking, and trading program within the given engine family during the model year, as described in paragraph (c) of this section.

AvgPR = the average maximum engine power of all the engine configurations within an engine family, calculated on a sales-weighted basis, in kilowatts.

UL = the useful life for the given engine family, in hours.

(c) In your application for certification, base your showing of compliance on projected production volumes for engines whose point of first retail sale is in the United States. As described in § 1039.730, compliance with the requirements of this subpart is determined at the end of the model year based on actual production volumes for engines whose point of first retail sale is in the United States. Do not include any of the following engines to calculate emission credits:

(1) Engines exempted under subpart G of this part or under 40 CFR part 1068.

(2) Exported engines.

(3) Engines not subject to the requirements of this part, such as those excluded under § 1039.5.

(4) Engines in families that include only stationary engines, except for engines in families certified to standards that are identical to standards applicable under this part 1039 to nonroad engines of the same type for the same model year.

(5) Any other engines, where we indicate elsewhere in this part 1039 that they are not to be included in the calculations of this subpart.

[69 FR 39213, June 29, 2004, as amended at 71 FR 39185, July 11, 2006; 72 FR 53133, Sept. 18, 2007; 75 FR 22992, Apr. 30, 2010]

§ 1039.710 How do I average emission credits?

(a) Averaging is the exchange of emission credits among your engine families. You may average emission credits only within the same averaging set.

(b) You may certify one or more engine families to an FEL above the applicable standard, subject to the FEL caps and other provisions in subpart B of this part, if you show in your application for certification that your projected balance of all emission-credit transactions in that model year is greater than or equal to zero.

(c) If you certify an engine family to an FEL that exceeds the otherwise applicable standard, you must obtain enough emission credits to offset the engine family's deficit by the due date for the final report required in § 1039.730. The emission credits used to address the deficit may come from your other engine families that generate emission credits in the same model year, from emission credits you have banked, or from emission credits you obtain through trading.

§ 1039.715 How do I bank emission credits?

(a) Banking is the retention of emission credits by the manufacturer generating the emission credits for use in future model years for averaging or trading.

(b) You may designate any emission credits you plan to bank in the reports you submit under § 1039.730 as reserved credits. During the model year and before the due date for the final report, you may designate your reserved emission credits for averaging or trading.

(c) Reserved credits become actual emission credits when you submit your final report. However, we may revoke these emission credits if we are unable to verify them after reviewing your reports or auditing your records.

[75 FR 22992, Apr. 30, 2010]

§ 1039.720 How do I trade emission credits?

(a) Trading is the exchange of emission credits between manufacturers. You may use traded emission credits for averaging, banking, or further trading transactions. Traded emission credits may be used only within the averaging set in which they were generated.

(b) You may trade actual emission credits as described in this subpart. You may also trade reserved emission credits, but we may revoke these emission credits based on our review of your records or reports or those of the company with which you traded emission credits. You may trade banked credits within an averaging set to any certifying manufacturer.

(c) If a negative emission credit balance results from a transaction, both the buyer and seller are liable, except in cases we deem to involve fraud. See § 1039.255(e) for cases involving fraud. We may void the certificates of all engine families participating in a trade that results in a manufacturer having

a negative balance of emission credits. See § 1039.745.

[69 FR 39213, June 29, 2004, as amended at 75 FR 22992, Apr. 30, 2010]

§ 1039.725 What must I include in my application for certification?

(a) You must declare in your application for certification your intent to use the provisions of this subpart for each engine family that will be certified using the ABT program. You must also declare the FELs you select for the engine family for each pollutant for which you are using the ABT program. Your FELs must comply with the specifications of subpart B of this part, including the FEL caps. FELs must be expressed to the same number of decimal places as the applicable standards.

(b) Include the following in your application for certification:

(1) A statement that, to the best of your belief, you will not have a negative balance of emission credits for any averaging set when all emission credits are calculated at the end of the year.

(2) Detailed calculations of projected emission credits (positive or negative) based on projected production volumes. We may require you to include similar calculations from your other engine families to demonstrate that you will be able to avoid a negative credit balance for the model year. If you project negative emission credits for a family, state the source of positive emission credits you expect to use to offset the negative emission credits.

[69 FR 39213, June 29, 2004, as amended at 75 FR 22992, Apr. 30, 2010]

§ 1039.730 What ABT reports must I send to EPA?

(a) If any of your engine families are certified using the ABT provisions of this subpart, you must send an end-of-year report within 90 days after the end of the model year and a final report within 270 days after the end of the model year. We may waive the requirement to send the end-of year report, as long as you send the final report on time.

(b) Your end-of-year and final reports must include the following information for each engine family participating in the ABT program:

(1) Engine-family designation.

(2) The emission standards that would otherwise apply to the engine family.

(3) The FEL for each pollutant. If you change the FEL after the start of production, identify the date that you started using the new FEL and/or give the engine identification number for the first engine covered by the new FEL. In this case, identify each applicable FEL and calculate the positive or negative emission credits as specified in § 1039.225.

(4) The projected and actual U.S.-directed production volumes for the model year. If you changed an FEL during the model year, identify the actual production volume associated with each FEL.

(5) Maximum engine power for each engine configuration, and the average engine power weighted by U.S.-directed production volumes for the engine family.

(6) Useful life.

(7) Calculated positive or negative emission credits for the whole engine family. Identify any emission credits that you traded, as described in paragraph (d)(1) of this section.

(c) Your end-of-year and final reports must include the following additional information:

(1) Show that your net balance of emission credits from all your participating engine families in each averaging set in the applicable model year is not negative.

(2) State whether you will reserve any emission credits for banking.

(3) State that the report's contents are accurate.

(d) If you trade emission credits, you must send us a report within 90 days after the transaction, as follows:

(1) As the seller, you must include the following information in your report:

(i) The corporate names of the buyer and any brokers.

(ii) A copy of any contracts related to the trade.

(iii) The engine families that generated emission credits for the trade, including the number of emission credits from each family.

(2) As the buyer, you must include the following information in your report:

(i) The corporate names of the seller and any brokers.

(ii) A copy of any contracts related to the trade.

(iii) How you intend to use the emission credits, including the number of emission credits you intend to apply to each engine family (if known).

(e) Send your reports electronically to the Designated Compliance Officer using an approved information format. If you want to use a different format, send us a written request with justification for a waiver.

(f) Correct errors in your end-of-year report or final report as follows:

(1) You may correct any errors in your end-of-year report when you prepare the final report, as long as you send us the final report by the time it is due.

(2) If you or we determine within 270 days after the end of the model year that errors mistakenly decreased your balance of emission credits, you may correct the errors and recalculate the balance of emission credits. You may not make these corrections for errors that are determined more than 270 days after the end of the model year. If you report a negative balance of emission credits, we may disallow corrections under this paragraph (f)(2).

(3) If you or we determine anytime that errors mistakenly increased your balance of emission credits, you must correct the errors and recalculate the balance of emission credits.

[69 FR 39213, June 29, 2004, as amended at 72 FR 53133, Sept. 18, 2007; 75 FR 22992, Apr. 30, 2010]

§ 1039.735 What records must I keep?

(a) You must organize and maintain your records as described in this section. We may review your records at any time.

(b) Keep the records required by this section for at least eight years after the due date for the end-of-year report. You may not use emission credits for any engines if you do not keep all the records required under this section. You must therefore keep these records to continue to bank valid credits. Store these records in any format and on any media, as long as you can promptly send us organized, written records in English if we ask for them. You must keep these records readily available. We may review them at any time.

(c) Keep a copy of the reports we require in § 1039.725 and § 1039.730.

(d) Keep records of the engine identification number for each engine you produce that generates or uses emission credits under the ABT program. You may identify these numbers as a range. If you change the FEL after the start of production, identify the date you started using each FEL and the range of engine identification numbers associated with each FEL. You must also identify the purchaser and destination for each engine you produce to the extent this information is available.

(e) We may require you to keep additional records or to send us relevant information not required by this section in accordance with the Clean Air Act.

[69 FR 39213, June 29, 2004, as amended at 72 FR 53133, Sept. 18, 2007; 75 FR 22993, Apr. 30, 2010]

§ 1039.740 What restrictions apply for using emission credits?

The following restrictions apply for using emission credits:

(a) *Averaging sets.* Emission credits may be exchanged only within an averaging set. For Tier 4 engines, there are two averaging sets—one for engines at or below 560 kW and another for engines above 560 kW.

(b) *Emission credits from earlier tiers of standards.* (1) For purposes of ABT under this subpart, you may not use emission credits generated from engines subject to emission standards under 40 CFR part 89, except as specified in § 1039.102(d)(1) or the following table:

If the maximum power of the credit-generating engine is . . .	And it was certified to the following standards under 40 CFR part 89 . . .	Then you may use those banked credits for the following Tier 4 engines . . .
(i) kW < 19	Tier 2	kW < 19
(ii) 19 ≤ kW < 37	Tier 2	kW ≥ 19
(iii) 37 ≤ kW ≤ 560	Tier 3	kW ≥ 19
(iv) kW > 560	Tier 2	kW ≥ 19

(2) Emission credits generated from marine engines certified under the provisions of 40 CFR part 89 may not be used under this part.

(3) See 40 CFR part 89 for other restrictions that may apply for using emission credits generated under that part.

(4) If the maximum power of an engine generating credits under the Tier 2 standards in 40 CFR part 89 is at or above 37 kW and below 75 kW, you may use those credits for certifying engines under the Option #1 standards in § 1039.102.

(c) *NO_X and NO_X+NMHC emission credits.* You may use NO_X emission credits without adjustment to show compliance with NO_X+NMHC standards. You may use NO_X+NMHC emission credits to show compliance with NO_X standards, but you must adjust the NO_X+NMHC emission credits downward by twenty percent when you use them, as shown in the following equation:

$$NO_X \text{ emission credits} = (0.8) \times (NO_X\text{+NMHC emission credits}).$$

(d) *Other restrictions.* Other sections of this part specify additional restrictions for using emission credits under certain special provisions.

[69 FR 39213, June 29, 2004, as amended at 70 FR 40464, July 13, 2005]

§ 1039.745 What can happen if I do not comply with the provisions of this subpart?

(a) For each engine family participating in the ABT program, the certificate of conformity is conditional upon full compliance with the provisions of this subpart during and after the model year. You are responsible to establish to our satisfaction that you fully comply with applicable requirements. We may void the certificate of conformity for an engine family if you fail to comply with any provisions of this subpart.

(b) You may certify your engine family to an FEL above an applicable standard based on a projection that you will have enough emission credits to offset the deficit for the engine family. However, we may void the certificate of conformity if you cannot show in your final report that you have enough actual emission credits to offset a deficit for any pollutant in an engine family.

(c) We may void the certificate of conformity for an engine family if you fail to keep records, send reports, or give us information we request.

(d) You may ask for a hearing if we void your certificate under this section (see § 1039.820).

Subpart I—Definitions and Other Reference Information

§ 1039.801 What definitions apply to this part?

The following definitions apply to this part. The definitions apply to all subparts unless we note otherwise. All undefined terms have the meaning the Act gives to them. The definitions follow:

Act means the Clean Air Act, as amended, 42 U.S.C. 7401–7671q.

Adjustable parameter means any device, system, or element of design that someone can adjust (including those which are difficult to access) and that, if adjusted, may affect emissions or engine performance during emission testing or normal in-use operation. This includes, but is not limited to, parameters related to injection timing and fueling rate. You may ask us to exclude a parameter that is difficult to access if it cannot be adjusted to affect emissions without significantly degrading engine performance, or if you otherwise show us that it will not be adjusted in a way that affects emissions during in-use operation.

Aftertreatment means relating to a catalytic converter, particulate filter, or any other system, component, or technology mounted downstream of the exhaust valve (or exhaust port) whose design function is to decrease emissions in the engine exhaust before it is exhausted to the environment. Exhaust-gas recirculation (EGR) and turbochargers are not aftertreatment.

Aircraft means any vehicle capable of sustained air travel above treetop heights.

Alcohol-fueled engine means an engine that is designed to run using an alcohol fuel. For purposes of this definition, alcohol fuels do not include fuels with a nominal alcohol content below 25 percent by volume.

Amphibious vehicle means a vehicle with wheels or tracks that is designed primarily for operation on land and secondarily for operation in water.

Auxiliary emission-control device means any element of design that senses temperature, motive speed, engine RPM, transmission gear, or any other parameter for the purpose of activating, modulating, delaying, or deactivating the operation of any part of the emission-control system.

Brake power means the usable power output of the engine, not including power required to fuel, lubricate, or heat the engine, circulate coolant to the engine, or to operate aftertreatment devices.

Calibration means the set of specifications and tolerances specific to a particular design, version, or application of a component or assembly capable of functionally describing its operation over its working range.

Carryover means relating to certification based on emission data generated from an earlier model year as described in § 1039.235(d).

Certification means relating to the process of obtaining a certificate of conformity for an engine family that complies with the emission standards and requirements in this part.

Certified emission level means the highest deteriorated emission level in an engine family for a given pollutant from either transient or steady-state testing.

Compression-ignition means relating to a type of reciprocating, internal-combustion engine that is not a spark-ignition engine.

Constant-speed engine means an engine whose certification is limited to constant-speed operation. Engines whose constant-speed governor function is removed or disabled are no longer constant-speed engines.

Constant-speed operation has the meaning given in 40 CFR 1065.1001.

Crankcase emissions means airborne substances emitted to the atmosphere from any part of the engine crankcase's ventilation or lubrication systems. The crankcase is the housing for the crankshaft and other related internal parts.

Critical emission-related component means any of the following components:

(1) Electronic control units, aftertreatment devices, fuel-metering components, EGR-system components, crankcase-ventilation valves, all components related to charge-air compression and cooling, and all sensors and actuators associated with any of these components.

(2) Any other component whose primary purpose is to reduce emissions.

Date of manufacture has the meaning given in 40 CFR 1068.30.

Designated Compliance Officer means the Manager, Heavy-Duty and Nonroad Engine Group (6405–J), U.S. Environmental Protection Agency, 1200 Pennsylvania Ave., NW., Washington, DC 20460.

Designated Enforcement Officer means the Director, Air Enforcement Division (2242A), U.S. Environmental Protection Agency, 1200 Pennsylvania Ave., NW.,Washington, DC 20460.

Deteriorated emission level means the emission level that results from applying the appropriate deterioration factor to the official emission result of the emission-data engine.

Deterioration factor means the relationship between emissions at the end of useful life and emissions at the low-hour test point, expressed in one of the following ways:

(1) For multiplicative deterioration factors, the ratio of emissions at the end of useful life to emissions at the low-hour test point.

(2) For additive deterioration factors, the difference between emissions at the end of useful life and emissions at the low-hour test point.

Discrete-mode means relating to the discrete-mode type of steady-state test described in § 1039.505.

Emission-control system means any device, system, or element of design that controls or reduces the emissions of regulated pollutants from an engine.

Emission-data engine means an engine that is tested for certification. This includes engines tested to establish deterioration factors.

Emission-related maintenance means maintenance that substantially affects emissions or is likely to substantially affect emission deterioration.

Engine configuration means a unique combination of engine hardware and calibration within an engine family. Engines within a single engine configuration differ only with respect to normal production variability or factors unrelated to emissions.

Engine family has the meaning given in § 1039.230.

Engine manufacturer means the manufacturer of the engine. See the definition of ''manufacturer'' in this section.

Engine used in a locomotive means either an engine placed in the locomotive to move other equipment, freight, or passenger traffic; or an engine mounted on the locomotive to provide auxiliary power.

Equipment manufacturer means a manufacturer of nonroad equipment. All nonroad equipment manufacturing entities under the control of the same person are considered to be a single nonroad equipment manufacturer. (Note: In § 1039.626, the term ''equipment manufacturer'' has a narrower meaning, which applies only to that section.)

Excluded means relating to an engine that either:

(1) Has been determined not to be a nonroad engine, as specified in 40 CFR 1068.30; or

(2) Is a nonroad engine that, according to § 1039.5, is not subject to this part 1039.

Exempted has the meaning we give in 40 CFR 1068.30.

Exhaust-gas recirculation means a technology that reduces emissions by routing exhaust gases that had been exhausted from the combustion chamber(s) back into the engine to be mixed with incoming air before or during combustion. The use of valve timing to increase the amount of residual exhaust gas in the combustion chamber(s) that is mixed with incoming air before or during combustion is not considered exhaust-gas recirculation for the purposes of this part.

Family emission limit (FEL) means an emission level declared by the manufacturer to serve in place of an otherwise applicable emission standard under the ABT program in subpart H of this part. The family emission limit must be expressed to the same number of decimal places as the emission standard it replaces. The family emission limit serves as the emission standard for the engine family with respect to all required testing.

Fuel system means all components involved in transporting, metering, and mixing the fuel from the fuel tank to the combustion chamber(s), including the fuel tank, fuel tank cap, fuel pump, fuel filters, fuel lines, carburetor or fuel-injection components, and all fuel-system vents.

Fuel type means a general category of fuels such as diesel fuel or natural gas. There can be multiple grades within a single fuel type, such as high-sulfur or low-sulfur diesel fuel.

Generator-set engine means an engine used primarily to operate an electrical generator or alternator to produce electric power for other applications.

Good engineering judgment has the meaning we give in 40 CFR 1068.30. See 40 CFR 1068.5 for the administrative process we use to evaluate good engineering judgment.

High-sulfur diesel fuel means one of the following:

(1) For in-use fuels, *high-sulfur diesel fuel* means a diesel fuel with a maximum sulfur concentration greater than 500 parts per million.

(2) For testing, *high-sulfur diesel fuel* has the meaning we give in 40 CFR part 1065.

Hydrocarbon (HC) means the hydrocarbon group on which the emission standards are based for each fuel type. For alcohol-fueled engines, HC means total hydrocarbon equivalent (THCE). For all other engines, HC means nonmethane hydrocarbon (NMHC).

Identification number means a unique specification (for example, a model number/serial number combination) that allows someone to distinguish a particular engine from other similar engines.

Intermediate test speed has the meaning given in 40 CFR 1065.1001.

Low-hour means relating to an engine with stabilized emissions and represents the undeteriorated emission level. This would generally involve less than 300 hours of operation.

Low-sulfur diesel fuel means one of the following:

(1) For in-use fuels, *low-sulfur diesel* fuel means a diesel fuel with a maximum sulfur concentration of 500 parts per million.

(2) For testing, *low-sulfur diesel fuel* has the meaning we give in 40 CFR part 1065.

Manufacture means the physical and engineering process of designing, constructing, and assembling a nonroad engine or a piece of nonroad equipment.

Manufacturer has the meaning given in section 216(1) of the Act. In general, this term includes any person who manufactures an engine, vehicle, or piece of equipment for sale in the United States or otherwise introduces a new nonroad engine into commerce in the United States. This includes importers who import engines, equipment, or vehicles for resale. (Note: In § 1039.626, the term ''equipment manufacturer'' has a narrower meaning, which applies only to that section.)

Marine engine means a nonroad engine that is installed or intended to be installed on a marine vessel. This includes a portable auxiliary marine engine only if its fueling, cooling, or exhaust system is an integral part of the vessel. There are two kinds of marine engines:

(1) Propulsion marine engine means a marine engine that moves a vessel through the water or directs the vessel's movement.

(2) Auxiliary marine engine means a marine engine not used for propulsion.

Marine vessel has the meaning given in 1 U.S.C. 3, except that it does not include amphibious vehicles. The definition in 1 U.S.C. 3 very broadly includes every craft capable of being used as a means of transportation on water.

Maximum engine power has the meaning given in § 1039.140. Note that § 1039.230 generally disallows grouping engines from different power categories in the same engine family.

Maximum test speed has the meaning we give in 40 CFR 1065.1001.

Maximum test torque has the meaning we give in 40 CFR 1065.1001.

Model year means one of the following things:

(1) For freshly manufactured equipment and engines (*see* definition of ''new nonroad engine,'' paragraph (1)), model year means one of the following:

(i) Calendar year.

(ii) Your annual new model production period if it is different than the calendar year. This must include January 1 of the calendar year for which the model year is named. It may not begin before January 2 of the previous calendar year and it must end by December 31 of the named calendar year.

(2) For an engine that is converted to a nonroad engine after being placed into service as a stationary engine, or being certified and placed into service as a motor vehicle engine, model year means the calendar year in which the engine was originally produced. For a motor vehicle engine that is converted to be a nonroad engine without having been certified, model year means the calendar year in which the engine becomes a new nonroad engine. (*See* definition of ''new nonroad engine,'' paragraph (2).)

(3) For a nonroad engine excluded under § 1039.5 that is later converted to operate in an application that is not excluded, model year means the calendar year in which the engine was originally produced (*see* definition of ''new nonroad engine,'' paragraph (3)).

(4) For engines that are not freshly manufactured but are installed in new nonroad equipment, model year means the calendar year in which the engine is installed in the new nonroad equipment (*see* definition of ''new nonroad engine,'' paragraph (4)).

(5) For imported engines:

(i) For imported engines described in paragraph (5)(i) of the definition of ''new nonroad engine,'' *model year* has the meaning given in paragraphs (1) through (4) of this definition.

(ii) For imported engines described in paragraph (5)(ii) of the definition of ''new nonroad engine,'' *model year* has the meaning given in 40 CFR 89.602 for independent commercial importers.

(iii) For imported engines described in paragraph (5)(iii) of the definition of ''new nonroad engine,'' *model year* means the calendar year in which the engine is first assembled in its imported configuration, unless specified otherwise in this part or in 40 CFR part 1068.

Motor vehicle has the meaning we give in 40 CFR 85.1703(a).

New nonroad engine means any of the following things:

(1) A freshly manufactured nonroad engine for which the ultimate purchaser has never received the equitable or legal title. This kind of engine might commonly be thought of as ''brand new.'' In the case of this paragraph (1), the engine is new from the time it is produced until the ultimate purchaser receives the title or the product is placed into service, whichever comes first.

(2) An engine originally manufactured as a motor vehicle engine or a stationary engine that is later used or intended to be used in a piece of nonroad equipment. In this case, the engine is no longer a motor vehicle or stationary engine and becomes a ''new nonroad engine.'' The engine is no longer new when it is placed into nonroad service. This paragraph (2) applies if a motor vehicle engine or a stationary engine is installed in nonroad equipment, or if a motor vehicle or a piece of stationary equipment is modified (or moved) to become nonroad equipment.

(3) A nonroad engine that has been previously placed into service in an application we exclude under §1039.5, when that engine is installed in a piece of equipment that is covered by this part 1039. The engine is no longer new when it is placed into nonroad service covered by this part 1039. For example, this would apply to marine diesel engine that is no longer used in a marine vessel but is instead installed in a piece of nonroad equipment subject to the provisions of this part.

(4) An engine not covered by paragraphs (1) through (3) of this definition that is intended to be installed in new nonroad equipment. This generally includes installation of used engines in new equipment. The engine is no longer new when the ultimate purchaser receives a title for the equipment or the product is placed into service, whichever comes first.

(5) An imported nonroad engine, subject to the following provisions:

(i) An imported nonroad engine covered by a certificate of conformity issued under this part that meets the criteria of one or more of paragraphs (1) through (4) of this definition, where the original engine manufacturer holds the certificate, is new as defined by those applicable paragraphs.

(ii) An imported engine covered by a certificate of conformity issued under this part, where someone other than the original engine manufacturer holds the certificate (such as when the engine is modified after its initial assembly), is a new nonroad engine when it is imported. It is no longer new when the ultimate purchaser receives a title for the engine or it is placed into service, whichever comes first.

(iii) An imported nonroad engine that is not covered by a certificate of conformity issued under this part at the time of importation is new, but only if it was produced on or after the dates shown in the following table. This addresses uncertified engines and equipment initially placed into service that someone seeks to import into the United States. Importation of this kind of engine (or equipment containing such an engine) is generally prohibited by 40 CFR part 1068. However, the importation of such an engine is not prohibited if the engine has an earlier model year than that identified in the following table:

APPLICABILITY OF EMISSION STANDARDS FOR NONROAD DIESEL ENGINES

Maximum engine power	Initial date of emission standards
kW < 19	January 1, 2000.
19 ≤ kW < 37	January 1, 1999.
37 ≤ kW < 75	January 1, 1998.
75 ≤ kW < 130	January 1, 1997.
130 ≤ kW ≤ 560	January 1, 1996.
kW > 560	January 1, 2000.

New nonroad equipment means either of the following things:

(1) A nonroad piece of equipment for which the ultimate purchaser has never received the equitable or legal title. The product is no longer new when the ultimate purchaser receives this title or the product is placed into service, whichever comes first.

(2) An imported nonroad piece of equipment with an engine not covered by a certificate of conformity issued

under this part at the time of importation and manufactured after the requirements of this part start to apply (see § 1039.1).

Noncommercial fuel means a combustible product that is not marketed as a commercial fuel, but is used as a fuel for nonroad engines. For example, this includes methane that is produced and released from landfills or oil wells, or similar unprocessed fuels that are not intended to meet any otherwise applicable fuel specifications. See § 1039.615 for provisions related to engines designed to burn noncommercial fuels.

Noncompliant engine means an engine that was originally covered by a certificate of conformity, but is not in the certified configuration or otherwise does not comply with the conditions of the certificate.

Nonconforming engine means an engine not covered by a certificate of conformity that would otherwise be subject to emission standards.

Nonmethane hydrocarbons (NMHC) means the sum of all hydrocarbon species except methane. Refer to 40 CFR 1065.660 for NMHC determination.

Nonroad means relating to nonroad engines or equipment that includes nonroad engines.

Nonroad engine has the meaning we give in 40 CFR 1068.30. In general this means all internal-combustion engines except motor vehicle engines, stationary engines, engines used solely for competition, or engines used in aircraft. This part does not apply to all nonroad engines (see § 1039.5).

Nonroad equipment means a piece of equipment that is powered by one or more nonroad engines.

Official emission result means the measured emission rate for an emission-data engine on a given duty cycle before the application of any deterioration factor, but after the applicability of regeneration adjustment factors.

Opacity means the fraction of a beam of light, expressed in percent, which fails to penetrate a plume of smoke, as measured by the procedure specified in § 1039.501.

Owners manual means a document or collection of documents prepared by the engine manufacturer for the owner or operator to describe appropriate engine maintenance, applicable warranties, and any other information related to operating or keeping the engine. The owners manual is typically provided to the ultimate purchaser at the time of sale.

Oxides of nitrogen has the meaning given in 40 CFR 1065.1001.

Particulate trap means a filtering device that is designed to physically trap all particulate matter above a certain size.

Piece of equipment means any vehicle, vessel, or other type of equipment using engines to which this part applies.

Placed into service means put into initial use for its intended purpose.

Point of first retail sale means the location at which the initial retail sale occurs. This generally means an equipment dealership, but may also include an engine seller or distributor in cases where loose engines are sold to the general public for uses such as replacement engines.

Power category means a specific range of maximum engine power that defines the applicability of standards. For example, references to the 56–130 kW power category and $56 \leq kW < 130$ include all engines with maximum engine power at or above 56 kW but below 130 kW. Also references to 56–560 kW power categories or $56 \leq kW \leq 560$ include all engines with maximum engine power at or above 56 kW but at or below 560 kW, even though these engines span multiple power categories. Note that in some cases, FEL caps are based on a subset of a power category. The power categories are defined as follows:

(1) Engines with maximum power below 19 kW.

(2) Engines with maximum power at or above 19 kW but below 56 kW.

(3) Engines with maximum power at or above 56 kW but below 130 kW.

(4) Engines with maximum power at or above 130 kW but at or below 560 kW.

(5) Engines with maximum power above 560 kW.

Ramped-modal means relating to the ramped-modal type of steady-state test described in § 1039.505.

Rated speed means the maximum full-load governed speed for governed engines and the speed of maximum power for ungoverned engines.

Revoke has the meaning we give in 40 CFR 1068.30.

Round has the meaning given in 40 CFR 1065.1001.

Scheduled maintenance means adjusting, repairing, removing, disassembling, cleaning, or replacing components or systems periodically to keep a part or system from failing, malfunctioning, or wearing prematurely. It also may mean actions you expect are necessary to correct an overt indication of failure or malfunction for which periodic maintenance is not appropriate.

Small-volume engine manufacturer means a small business engine manufacturer that had engine families certified to meet the requirements of 40 CFR part 89 before 2003 (40 CFR part 89, revised as of July 1, 2002), had annual U.S.-directed production of no more than 2,500 units in 2002 and all earlier calendar years, and has 1000 or fewer employees. For manufacturers owned by a parent company, the production limit applies to the production of the parent company and all its subsidiaries and the employee limit applies to the total number of employees of the parent company and all its subsidiaries.

Spark-ignition means relating to a gasoline-fueled engine or any other type of engine with a spark plug (or other sparking device) and with operating characteristics significantly similar to the theoretical Otto combustion cycle. Spark-ignition engines usually use a throttle to regulate intake air flow to control power during normal operation.

Steady-state has the meaning given in 40 CFR 1065.1001.

Sulfur-sensitive technology means an emission-control technology that experiences a significant drop in emission-control performance or emission-system durability when an engine is operated on low-sulfur fuel (*i.e.*, fuel with a sulfur concentration of 300 to 500 ppm) as compared to when it is operated on ultra low-sulfur fuel (*i.e.*, fuel with a sulfur concentration less than 15 ppm). Exhaust-gas recirculation is not a sulfur-sensitive technology.

Suspend has the meaning we give in 40 CFR 1068.30.

Test engine means an engine in a test sample.

Test sample means the collection of engines selected from the population of an engine family for emission testing. This may include testing for certification, production-line testing, or in-use testing.

Tier 1 means relating to the Tier 1 emission standards, as shown in 40 CFR 89.112.

Tier 2 means relating to the Tier 2 emission standards, as shown in 40 CFR 89.112.

Tier 3 means relating to the Tier 3 emission standards, as shown in 40 CFR 89.112.

Tier 4 means relating to the Tier 4 emission standards, as shown in §1039.101 and §1039.102. This includes the emission standards that are shown in §1039.101 and §1039.102 that are unchanged from Tier 2 or Tier 3 emission standards.

Total hydrocarbon has the meaning given in 40 CFR 1065.1001. This generally means the combined mass of organic compounds measured by the specified procedure for measuring total hydrocarbon, expressed as a hydrocarbon with an atomic hydrogen-to-carbon ratio of 1.85:1.

Total hydrocarbon equivalent has the meaning given in 40 CFR 1065.1001. This generally means the sum of the carbon mass contributions of non-oxygenated hydrocarbons, alcohols and aldehydes, or other organic compounds that are measured separately as contained in a gas sample, expressed as exhaust hydrocarbon from petroleum-fueled engines. The atomic hydrogen-to-carbon ratio of the equivalent hydrocarbon is 1.85:1.

Ultimate purchaser means, with respect to any new nonroad equipment or new nonroad engine, the first person who in good faith purchases such new nonroad equipment or new nonroad engine for purposes other than resale.

Ultra low-sulfur diesel fuel means one of the following:

(1) For in-use fuels, *ultra low-sulfur diesel fuel* means a diesel fuel with a maximum sulfur concentration of 15 parts per million.

(2) For testing, *ultra low-sulfur diesel fuel* has the meaning we give in 40 CFR part 1065.

United States has the meaning we give in 40 CFR 1068.30.

Upcoming model year means for an engine family the model year after the one currently in production.

U.S.-directed production volume means the number of engine units, subject to the requirements of this part, produced by a manufacturer for which the manufacturer has a reasonable assurance that sale was or will be made to ultimate purchasers in the United States.

Useful life means the period during which the engine is designed to properly function in terms of reliability and fuel consumption, without being remanufactured, specified as a number of hours of operation or calendar years, whichever comes first. It is the period during which a nonroad engine is required to comply with all applicable emission standards. *See* § 1039.101(g).

Variable-speed engine means an engine that is not a constant-speed engine.

Void has the meaning we give in 40 CFR 1068.30.

Volatile liquid fuel means any fuel other than diesel or biodiesel that is a liquid at atmospheric pressure and has a Reid Vapor Pressure higher than 2.0 pounds per square inch.

We (us, our) means the Administrator of the Environmental Protection Agency and any authorized representatives.

[69 FR 39213, June 29, 2004, as amended at 70 FR 40464, July 13, 2005; 72 FR 53133, Sept. 18, 2007; 73 FR 59192, Oct. 8, 2008; 75 FR 22993, Apr. 30, 2010]

§ 1039.805 What symbols, acronyms, and abbreviations does this part use?

The following symbols, acronyms, and abbreviations apply to this part:

CFR Code of Federal Regulations.
CH_4 methane.
CO carbon monoxide.
CO2 carbon dioxide.
EPA Environmental Protection Agency.
FEL Family Emission Limit.
g/kW-hr grams per kilowatt-hour.
HC hydrocarbon.
kW kilowatts.
N_2O nitrous oxide.
NIST National Institute of Standards and Technology.
NMHC nonmethane hydrocarbons.
NO_X oxides of nitrogen (NO and NO_2).
NTE not-to-exceed
PM particulate matter.
rpm revolutions per minute.
SAE Society of Automotive Engineers.
SEA Selective enforcement audit.
THC total hydrocarbon.
THCE total hydrocarbon equivalent.
TRU transportation refrigeration unit.
U.S.C. United States Code.

[69 FR 39213, June 29, 2004, as amended at 74 FR 56509, Oct. 30, 2009]

§ 1039.815 What provisions apply to confidential information?

(a) Clearly show what you consider confidential by marking, circling, bracketing, stamping, or some other method.

(b) We will store your confidential information as described in 40 CFR part 2. Also, we will disclose it only as specified in 40 CFR part 2. This applies both to any information you send us and to any information we collect from inspections, audits, or other site visits.

(c) If you send us a second copy without the confidential information, we will assume it contains nothing confidential whenever we need to release information from it.

(d) If you send us information without claiming it is confidential, we may make it available to the public without further notice to you, as described in 40 CFR 2.204.

§ 1039.820 How do I request a hearing?

(a) You may request a hearing under certain circumstances, as described elsewhere in this part. To do this, you must file a written request, including a description of your objection and any supporting data, within 30 days after we make a decision.

(b) For a hearing you request under the provisions of this part, we will approve your request if we find that your request raises a substantial factual issue.

(c) If we agree to hold a hearing, we will use the procedures specified in 40 CFR part 1068, subpart G.

§ 1039.825 What reporting and recordkeeping requirements apply under this part?

Under the Paperwork Reduction Act (44 U.S.C. 3501 et seq.), the Office of Management and Budget approves the reporting and recordkeeping specified in the applicable regulations. The following items illustrate the kind of reporting and recordkeeping we require for engines and equipment regulated under this part:

(a) We specify the following requirements related to engine certification in this part 1039:

(1) In §1039.20 we require engine manufacturers to label stationary engines that do not meet the standards in this part.

(2) In §1039.135 we require engine manufacturers to keep certain records related to duplicate labels sent to equipment manufacturers.

(3) [Reserved]

(4) In subpart C of this part we identify a wide range of information required to certify engines.

(5) [Reserved]

(6) [Reserved]

(7) In subpart G of this part we identify several reporting and recordkeeping items for making demonstrations and getting approval related to various special compliance provisions. For example, equipment manufacturers must submit reports and keep records related to the flexibility provisions in §1039.625.

(8) In §1039.725, 1039.730, and 1039.735 we specify certain records related to averaging, banking, and trading.

(b) We specify the following requirements related to testing in 40 CFR part 1065:

(1) In 40 CFR 1065.2 we give an overview of principles for reporting information.

(2) In 40 CFR 1065.10 and 1065.12 we specify information needs for establishing various changes to published test procedures.

(3) In 40 CFR 1065.25 we establish basic guidelines for storing test information.

(4) In 40 CFR 1065.695 we identify data that may be appropriate for collecting during testing of in-use engines using portable analyzers.

(c) We specify the following requirements related to the general compliance provisions in 40 CFR part 1068:

(1) In 40 CFR 1068.5 we establish a process for evaluating good engineering judgment related to testing and certification.

(2) In 40 CFR 1068.25 we describe general provisions related to sending and keeping information.

(3) In 40 CFR 1068.27 we require manufacturers to make engines available for our testing or inspection if we make such a request.

(4) In 40 CFR 1068.105 we require equipment manufacturers to keep certain records related to duplicate labels from engine manufacturers.

(5) In 40 CFR 1068.120 we specify recordkeeping related to rebuilding engines.

(6) In 40 CFR part 1068, subpart C, we identify several reporting and recordkeeping items for making demonstrations and getting approval related to various exemptions.

(7) In 40 CFR part 1068, subpart D, we identify several reporting and recordkeeping items for making demonstrations and getting approval related to importing engines.

(8) In 40 CFR 1068.450 and 1068.455 we specify certain records related to testing production-line engines in a selective enforcement audit.

(9) In 40 CFR 1068.501 we specify certain records related to investigating and reporting emission-related defects.

(10) In 40 CFR 1068.525 and 1068.530 we specify certain records related to recalling nonconforming engines.

[72 FR 53134, Sept. 18, 2007]

APPENDIX I TO PART 1039 [RESERVED]

APPENDIX II TO PART 1039—STEADY-STATE DUTY CYCLES

(a) The following duty cycles apply for constant-speed engines:

(1) The following duty cycle applies for discrete-mode testing:

D2 mode number	Engine speed	Torque (percent) [1]	Weighting factors
1	Engine governed	100	0.05
2	Engine governed	75	0.25
3	Engine governed	50	0.30
4	Engine governed	25	0.30
5	Engine governed	10	0.10

[1] The percent torque is relative to maximum test torque.

(2) The following duty cycle applies for ramped-modal testing:

RMC mode	Time in mode (seconds)	Engine speed	Torque (percent) [1, 2]
1a Steady-state	53	Engine governed	100.
1b Transition	20	Engine governed	Linear transition.
2a Steady-state	101	Engine governed	10.
2b Transition	20	Engine governed	Linear transition.
3a Steady-state	277	Engine governed	75.
3b Transition	20	Engine governed	Linear transition.
4a Steady-state	339	Engine governed	25.
4b Transition	20	Engine governed	Linear transition.
5 Steady-state	350	Engine governed	50.

[1] The percent torque is relative to maximum test torque.
[2] Advance from one mode to the next within a 20-second transition phase. During the transition phase, command a linear progression from the torque setting of the current mode to the torque setting of the next mode.

(b) The following duty cycles apply for variable-speed engines with maximum engine power below 19 kW:

(1) The following duty cycle applies for discrete-mode testing:

G2 mode number	Engine speed [1]	Torque (percent) [2]	Weighting factors
1	Maximum test speed	100	0.09
2	Maximum test speed	75	0.20
3	Maximum test speed	50	0.29
4	Maximum test speed	25	0.30
5	Maximum test speed	10	0.07
6	Warm idle	0	0.05

[1] Speed terms are defined in 40 CFR part 1065.
[2] The percent torque is relative to the maximum torque at the commanded test speed.

(2) The following duty cycle applies for ramped-modal testing:

RMC mode	Time in mode (seconds)	Engine speed [1, 3]	Torque (percent) [2, 3]
1a Steady-state	41	Warm idle	0.
1b Transition	20	Linear transition	Linear transition.
2a Steady-state	135	Maximum test speed	100.
2b Transition	20	Maximum test speed	Linear transition.
3a Steady-state	112	Maximum test speed	10.
3b Transition	20	Maximum test speed	Linear transition.
4a Steady-state	337	Maximum test speed	75.
4b Transition	20	Maximum test speed	Linear transition.
5a Steady-state	518	Maximum test speed	25.
5b Transition	20	Maximum test speed	Linear transition.
6a Steady-state	494	Maximum test speed	50.
6b Transition	20	Linear transition	Linear transition.
7 Steady-state	43	Warm idle	0.

[1] Speed terms are defined in 40 CFR part 1065.
[2] The percent torque is relative to the maximum torque at the commanded engine speed.
[3] Advance from one mode to the next within a 20-second transition phase. During the transition phase, command a linear progression from the torque setting of the current mode to the torque setting of the next mode, and simultaneously command a similar linear progression for engine speed if there is a change in speed setting.

(c) The following duty cycles apply for variable-speed engines with maximum engine power at or above 19 kW:

(1) The following duty cycle applies for discrete-mode testing:

C1 mode number	Engine speed [1]	Torque (percent) [2]	Weighting factors
1	Maximum test speed	100	0.15
2	Maximum test speed	75	0.15
3	Maximum test speed	50	0.15

C1 mode number	Engine speed [1]	Torque (percent) [2]	Weighting factors
4	Maximum test speed	10	0.10
5	Intermediate test speed	100	0.10
6	Intermediate test speed	75	0.10
7	Intermediate test speed	50	0.10
8	Warm idle	0	0.15

[1] Speed terms are defined in 40 CFR part 1065.
[2] The percent torque is relative to the maximum torque at the commanded test speed.

(2) The following duty cycle applies for ramped-modal testing:

RMC mode	Time in mode (seconds)	Engine speed [1, 3]	Torque (percent) [2, 3]
1a Steady-state	126	Warm Idle	0.
1b Transition	20	Linear Transition	Linear Transition.
2a Steady-state	159	Intermediate Speed	100.
2b Transition	20	Intermediate Speed	Linear Transition.
3a Steady-state	160	Intermediate Speed	50.
3b Transition	20	Intermediate Speed	Linear Transition.
4a Steady-state	162	Intermediate Speed	75.
4b Transition	20	Linear Transition	Linear Transition.
5a Steady-state	246	Maximum Test Speed	100.
5b Transition	20	Maximum Test Speed	Linear Transition.
6a Steady-state	164	Maximum Test Speed	10.
6b Transition	20	Maximum Test Speed	Linear Transition.
7a Steady-state	248	Maximum Test Speed	75.
7b Transition	20	Maximum Test Speed	Linear Transition.
8a Steady-state	247	Maximum Test Speed	50.
8b Transition	20	Linear Transition	Linear Transition.
9 Steady-state	128	Warm Idle	0.

[1] Speed terms are defined in 40 CFR part 1065.
[2] The percent torque is relative to the maximum torque at the commanded engine speed.
[3] Advance from one mode to the next within a 20-second transition phase. During the transition phase, command a linear progression from the torque setting of the current mode to the torque setting of the next mode, and simultaneously command a similar linear progression for engine speed if there is a change in speed setting.

[69 FR 39213, June 29, 2004, as amended at 73 FR 37241, June 30, 2008]

Appendix V to Part 1039 [Reserved]

Appendix VI to Part 1039—Nonroad Compression-ignition Composite Transient Cycle

Time(s)	Normalized speed (percent)	Normalized torque (percent) [1]
1	0	0
2	0	0
3	0	0
4	0	0
5	0	0
6	0	0
7	0	0
8	0	0
9	0	0
10	0	0
11	0	0
12	0	0
13	0	0
14	0	0
15	0	0
16	0	0
17	0	0
18	0	0
19	0	0
20	0	0
21	0	0
22	0	0
23	0	0
24	1	3
25	1	3
26	1	3
27	1	3
28	1	3
29	1	3
30	1	6
31	1	6
32	2	1
33	4	13
34	7	18
35	9	21
36	17	20
37	33	42
38	57	46
39	44	33
40	31	0
41	22	27
42	33	43
43	80	49
44	105	47
45	98	70
46	104	36
47	104	65

Time(s)	Normalized speed (percent)	Normalized torque (percent) [1]
48	96	71
49	101	62
50	102	51
51	102	50
52	102	46
53	102	41
54	102	31
55	89	2
56	82	0
57	47	1
58	23	1
59	1	3
60	1	8
61	1	3
62	1	5
63	1	6
64	1	4
65	1	4
66	0	6
67	1	4
68	9	21
69	25	56
70	64	26
71	60	31
72	63	20
73	62	24
74	64	8
75	58	44
76	65	10
77	65	12
78	68	23
79	69	30
80	71	30
81	74	15
82	71	23
83	73	20
84	73	21
85	73	19
86	70	33
87	70	34
88	65	47
89	66	47
90	64	53
91	65	45
92	66	38
93	67	49
94	69	39
95	69	39
96	66	42
97	71	29
98	75	29
99	72	23
100	74	22
101	75	24
102	73	30
103	74	24
104	77	6
105	76	12
106	74	39
107	72	30
108	75	22
109	78	64
110	102	34
111	103	28
112	103	28
113	103	19
114	103	32
115	104	25
116	103	38
117	103	39
118	103	34
119	102	44
120	103	38
121	102	43
122	103	34
123	102	41
124	103	44
125	103	37
126	103	27
127	104	13
128	104	30
129	104	19
130	103	28
131	104	40
132	104	32
133	101	63
134	102	54
135	102	52
136	102	51
137	103	40
138	104	34
139	102	36
140	104	44
141	103	44
142	104	33
143	102	27
144	103	26
145	79	53
146	51	37
147	24	23
148	13	33
149	19	55
150	45	30
151	34	7
152	14	4
153	8	16
154	15	6
155	39	47
156	39	4
157	35	26
158	27	38
159	43	40
160	14	23
161	10	10
162	15	33
163	35	72
164	60	39
165	55	31
166	47	30
167	16	7
168	0	6
169	0	8
170	0	8
171	0	2
172	2	17
173	10	28
174	28	31
175	33	30
176	36	0
177	19	10
178	1	18
179	0	16
180	1	3
181	1	4
182	1	5
183	1	6
184	1	5
185	1	3
186	1	4
187	1	4
188	1	6
189	8	18
190	20	51
191	49	19

Time(s)	Normalized speed (percent)	Normalized torque (percent) [1]
192	41	13
193	31	16
194	28	21
195	21	17
196	31	21
197	21	8
198	0	14
199	0	12
200	3	8
201	3	22
202	12	20
203	14	20
204	16	17
205	20	18
206	27	34
207	32	33
208	41	31
209	43	31
210	37	33
211	26	18
212	18	29
213	14	51
214	13	11
215	12	9
216	15	33
217	20	25
218	25	17
219	31	29
220	36	66
221	66	40
222	50	13
223	16	24
224	26	50
225	64	23
226	81	20
227	83	11
228	79	23
229	76	31
230	68	24
231	59	33
232	59	3
233	25	7
234	21	10
235	20	19
236	4	10
237	5	7
238	4	5
239	4	6
240	4	6
241	4	5
242	7	5
243	16	28
244	28	25
245	52	53
246	50	8
247	26	40
248	48	29
249	54	39
250	60	42
251	48	18
252	54	51
253	88	90
254	103	84
255	103	85
256	102	84
257	58	66
258	64	97
259	56	80
260	51	67
261	52	96
262	63	62
263	71	6
264	33	16
265	47	45
266	43	56
267	42	27
268	42	64
269	75	74
270	68	96
271	86	61
272	66	0
273	37	0
274	45	37
275	68	96
276	80	97
277	92	96
278	90	97
279	82	96
280	94	81
281	90	85
282	96	65
283	70	96
284	55	95
285	70	96
286	79	96
287	81	71
288	71	60
289	92	65
290	82	63
291	61	47
292	52	37
293	24	0
294	20	7
295	39	48
296	39	54
297	63	58
298	53	31
299	51	24
300	48	40
301	39	0
302	35	18
303	36	16
304	29	17
305	28	21
306	31	15
307	31	10
308	43	19
309	49	63
310	78	61
311	78	46
312	66	65
313	78	97
314	84	63
315	57	26
316	36	22
317	20	34
318	19	8
319	9	10
320	5	5
321	7	11
322	15	15
323	12	9
324	13	27
325	15	28
326	16	28
327	16	31
328	15	20
329	17	0
330	20	34
331	21	25
332	20	0
333	23	25
334	30	58
335	63	96

Time(s)	Normalized speed (percent)	Normalized torque (percent) [1]
336	83	60
337	61	0
338	26	0
339	29	44
340	68	97
341	80	97
342	88	97
343	99	88
344	102	86
345	100	82
346	74	79
347	57	79
348	76	97
349	84	97
350	86	97
351	81	98
352	83	83
353	65	96
354	93	72
355	63	60
356	72	49
357	56	27
358	29	0
359	18	13
360	25	11
361	28	24
362	34	53
363	65	83
364	80	44
365	77	46
366	76	50
367	45	52
368	61	98
369	61	69
370	63	49
371	32	0
372	10	8
373	17	7
374	16	13
375	11	6
376	9	5
377	9	12
378	12	46
379	15	30
380	26	28
381	13	9
382	16	21
383	24	4
384	36	43
385	65	85
386	78	66
387	63	39
388	32	34
389	46	55
390	47	42
391	42	39
392	27	0
393	14	5
394	14	14
395	24	54
396	60	90
397	53	66
398	70	48
399	77	93
400	79	67
401	46	65
402	69	98
403	80	97
404	74	97
405	75	98
406	56	61
407	42	0
408	36	32
409	34	43
410	68	83
411	102	48
412	62	0
413	41	39
414	71	86
415	91	52
416	89	55
417	89	56
418	88	58
419	78	69
420	98	39
421	64	61
422	90	34
423	88	38
424	97	62
425	100	53
426	81	58
427	74	51
428	76	57
429	76	72
430	85	72
431	84	60
432	83	72
433	83	72
434	86	72
435	89	72
436	86	72
437	87	72
438	88	72
439	88	71
440	87	72
441	85	71
442	88	72
443	88	72
444	84	72
445	83	73
446	77	73
447	74	73
448	76	72
449	46	77
450	78	62
451	79	35
452	82	38
453	81	41
454	79	37
455	78	35
456	78	38
457	78	46
458	75	49
459	73	50
460	79	58
461	79	71
462	83	44
463	53	48
464	40	48
465	51	75
466	75	72
467	89	67
468	93	60
469	89	73
470	86	73
471	81	73
472	78	73
473	78	73
474	76	73
475	79	73
476	82	73
477	86	73
478	88	72
479	92	71

Time(s)	Normalized speed (percent)	Normalized torque (percent) [1]
480	97	54
481	73	43
482	36	64
483	63	31
484	78	1
485	69	27
486	67	28
487	72	9
488	71	9
489	78	36
490	81	56
491	75	53
492	60	45
493	50	37
494	66	41
495	51	61
496	68	47
497	29	42
498	24	73
499	64	71
500	90	71
501	100	61
502	94	73
503	84	73
504	79	73
505	75	72
506	78	73
507	80	73
508	81	73
509	81	73
510	83	73
511	85	73
512	84	73
513	85	73
514	86	73
515	85	73
516	85	73
517	85	72
518	85	73
519	83	73
520	79	73
521	78	73
522	81	73
523	82	72
524	94	56
525	66	48
526	35	71
527	51	44
528	60	23
529	64	10
530	63	14
531	70	37
532	76	45
533	78	18
534	76	51
535	75	33
536	81	17
537	76	45
538	76	30
539	80	14
540	71	18
541	71	14
542	71	11
543	65	2
544	31	26
545	24	72
546	64	70
547	77	62
548	80	68
549	83	53
550	83	50
551	83	50
552	85	43
553	86	45
554	89	35
555	82	61
556	87	50
557	85	55
558	89	49
559	87	70
560	91	39
561	72	3
562	43	25
563	30	60
564	40	45
565	37	32
566	37	32
567	43	70
568	70	54
569	77	47
570	79	66
571	85	53
572	83	57
573	86	52
574	85	51
575	70	39
576	50	5
577	38	36
578	30	71
579	75	53
580	84	40
581	85	42
582	86	49
583	86	57
584	89	68
585	99	61
586	77	29
587	81	72
588	89	69
589	49	56
590	79	70
591	104	59
592	103	54
593	102	56
594	102	56
595	103	61
596	102	64
597	103	60
598	93	72
599	86	73
600	76	73
601	59	49
602	46	22
603	40	65
604	72	31
605	72	27
606	67	44
607	68	37
608	67	42
609	68	50
610	77	43
611	58	4
612	22	37
613	57	69
614	68	38
615	73	2
616	40	14
617	42	38
618	64	69
619	64	74
620	67	73
621	65	73
622	68	73
623	65	49

Time(s)	Normalized speed (percent)	Normalized torque (percent) [1]
624	81	0
625	37	25
626	24	69
627	68	71
628	70	71
629	76	70
630	71	72
631	73	69
632	76	70
633	77	72
634	77	72
635	77	72
636	77	70
637	76	71
638	76	71
639	77	71
640	77	71
641	78	70
642	77	70
643	77	71
644	79	72
645	78	70
646	80	70
647	82	71
648	84	71
649	83	71
650	83	73
651	81	70
652	80	71
653	78	71
654	76	70
655	76	70
656	76	71
657	79	71
658	78	71
659	81	70
660	83	72
661	84	71
662	86	71
663	87	71
664	92	72
665	91	72
666	90	71
667	90	71
668	91	71
669	90	70
670	90	72
671	91	71
672	90	71
673	90	71
674	92	72
675	93	69
676	90	70
677	93	72
678	91	70
679	89	71
680	91	71
681	90	71
682	90	71
683	92	71
684	91	71
685	93	71
686	93	68
687	98	68
688	98	67
689	100	69
690	99	68
691	100	71
692	99	68
693	100	69
694	102	72
695	101	69
696	100	69
697	102	71
698	102	71
699	102	69
700	102	71
701	102	68
702	100	69
703	102	70
704	102	68
705	102	70
706	102	72
707	102	68
708	102	69
709	100	68
710	102	71
711	101	64
712	102	69
713	102	69
714	101	69
715	102	64
716	102	69
717	102	68
718	102	70
719	102	69
720	102	70
721	102	70
722	102	62
723	104	38
724	104	15
725	102	24
726	102	45
727	102	47
728	104	40
729	101	52
730	103	32
731	102	50
732	103	30
733	103	44
734	102	40
735	103	43
736	103	41
737	102	46
738	103	39
739	102	41
740	103	41
741	102	38
742	103	39
743	102	46
744	104	46
745	103	49
746	102	45
747	103	42
748	103	46
749	103	38
750	102	48
751	103	35
752	102	48
753	103	49
754	102	48
755	102	46
756	103	47
757	102	49
758	102	42
759	102	52
760	102	57
761	102	55
762	102	61
763	102	61
764	102	58
765	103	58
766	102	59
767	102	54

Time(s)	Normalized speed (percent)	Normalized torque (percent) [1]
768	102	63
769	102	61
770	103	55
771	102	60
772	102	72
773	103	56
774	102	55
775	102	67
776	103	56
777	84	42
778	48	7
779	48	6
780	48	6
781	48	7
782	48	6
783	48	7
784	67	21
785	105	59
786	105	96
787	105	74
788	105	66
789	105	62
790	105	66
791	89	41
792	52	5
793	48	5
794	48	7
795	48	5
796	48	6
797	48	4
798	52	6
799	51	5
800	51	6
801	51	6
802	52	5
803	52	5
804	57	44
805	98	90
806	105	94
807	105	100
808	105	98
809	105	95
810	105	96
811	105	92
812	104	97
813	100	85
814	94	74
815	87	62
816	81	50
817	81	46
818	80	39
819	80	32
820	81	28
821	80	26
822	80	23
823	80	23
824	80	20
825	81	19
826	80	18
827	81	17
828	80	20
829	81	24
830	81	21
831	80	26
832	80	24
833	80	23
834	80	22
835	81	21
836	81	24
837	81	24
838	81	22
839	81	22
840	81	21
841	81	31
842	81	27
843	80	26
844	80	26
845	81	25
846	80	21
847	81	20
848	83	21
849	83	15
850	83	12
851	83	9
852	83	8
853	83	7
854	83	6
855	83	6
856	83	6
857	83	6
858	83	6
859	76	5
860	49	8
861	51	7
862	51	20
863	78	52
864	80	38
865	81	33
866	83	29
867	83	22
868	83	16
869	83	12
870	83	9
871	83	8
872	83	7
873	83	6
874	83	6
875	83	6
876	83	6
877	83	6
878	59	4
879	50	5
880	51	5
881	51	5
882	51	5
883	50	5
884	50	5
885	50	5
886	50	5
887	50	5
888	51	5
889	51	5
890	51	5
891	63	50
892	81	34
893	81	25
894	81	29
895	81	23
896	80	24
897	81	24
898	81	28
899	81	27
900	81	22
901	81	19
902	81	17
903	81	17
904	81	17
905	81	15
906	80	15
907	80	28
908	81	22
909	81	24
910	81	19
911	81	21

Time(s)	Normalized speed (percent)	Normalized torque (percent) [1]
912	81	20
913	83	26
914	80	63
915	80	59
916	83	100
917	81	73
918	83	53
919	80	76
920	81	61
921	80	50
922	81	37
923	82	49
924	83	37
925	83	25
926	83	17
927	83	13
928	83	10
929	83	8
930	83	7
931	83	7
932	83	6
933	83	6
934	83	6
935	71	5
936	49	24
937	69	64
938	81	50
939	81	43
940	81	42
941	81	31
942	81	30
943	81	35
944	81	28
945	81	27
946	80	27
947	81	31
948	81	41
949	81	41
950	81	37
951	81	43
952	81	34
953	81	31
954	81	26
955	81	23
956	81	27
957	81	38
958	81	40
959	81	39
960	81	27
961	81	33
962	80	28
963	81	34
964	83	72
965	81	49
966	81	51
967	80	55
968	81	48
969	81	36
970	81	39
971	81	38
972	80	41
973	81	30
974	81	23
975	81	19
976	81	25
977	81	29
978	83	47
979	81	90
980	81	75
981	80	60
982	81	48
983	81	41
984	81	30
985	80	24
986	81	20
987	81	21
988	81	29
989	81	29
990	81	27
991	81	23
992	81	25
993	81	26
994	81	22
995	81	20
996	81	17
997	81	23
998	83	65
999	81	54
1000	81	50
1001	81	41
1002	81	35
1003	81	37
1004	81	29
1005	81	28
1006	81	24
1007	81	19
1008	81	16
1009	80	16
1010	83	23
1011	83	17
1012	83	13
1013	83	27
1014	81	58
1015	81	60
1016	81	46
1017	80	41
1018	80	36
1019	81	26
1020	86	18
1021	82	35
1022	79	53
1023	82	30
1024	83	29
1025	83	32
1026	83	28
1027	76	60
1028	79	51
1029	86	26
1030	82	34
1031	84	25
1032	86	23
1033	85	22
1034	83	26
1035	83	25
1036	83	37
1037	84	14
1038	83	39
1039	76	70
1040	78	81
1041	75	71
1042	86	47
1043	83	35
1044	81	43
1045	81	41
1046	79	46
1047	80	44
1048	84	20
1049	79	31
1050	87	29
1051	82	49
1052	84	21
1053	82	56
1054	81	30
1055	85	21

Time(s)	Normalized speed (percent)	Normalized torque (percent) [1]
1056	86	16
1057	79	52
1058	78	60
1059	74	55
1060	78	84
1061	80	54
1062	80	35
1063	82	24
1064	83	43
1065	79	49
1066	83	50
1067	86	12
1068	64	14
1069	24	14
1070	49	21
1071	77	48
1072	103	11
1073	98	48
1074	101	34
1075	99	39
1076	103	11
1077	103	19
1078	103	7
1079	103	13
1080	103	10
1081	102	13
1082	101	29
1083	102	25
1084	102	20
1085	96	60
1086	99	38
1087	102	24
1088	100	31
1089	100	28
1090	98	3
1091	102	26
1092	95	64
1093	102	23
1094	102	25
1095	98	42
1096	93	68
1097	101	25
1098	95	64
1099	101	35
1100	94	59
1101	97	37
1102	97	60
1103	93	98
1104	98	53
1105	103	13
1106	103	11
1107	103	11
1108	103	13
1109	103	10
1110	103	10
1111	103	11
1112	103	10
1113	103	10
1114	102	18
1115	102	31
1116	101	24
1117	102	19
1118	103	10
1119	102	12
1120	99	56
1121	96	59
1122	74	28
1123	66	62
1124	74	29
1125	64	74
1126	69	40
1127	76	2
1128	72	29
1129	66	65
1130	54	69
1131	69	56
1132	69	40
1133	73	54
1134	63	92
1135	61	67
1136	72	42
1137	78	2
1138	76	34
1139	67	80
1140	70	67
1141	53	70
1142	72	65
1143	60	57
1144	74	29
1145	69	31
1146	76	1
1147	74	22
1148	72	52
1149	62	96
1150	54	72
1151	72	28
1152	72	35
1153	64	68
1154	74	27
1155	76	14
1156	69	38
1157	66	59
1158	64	99
1159	51	86
1160	70	53
1161	72	36
1162	71	47
1163	70	42
1164	67	34
1165	74	2
1166	75	21
1167	74	15
1168	75	13
1169	76	10
1170	75	13
1171	75	10
1172	75	7
1173	75	13
1174	76	8
1175	76	7
1176	67	45
1177	75	13
1178	75	12
1179	73	21
1180	68	46
1181	74	8
1182	76	11
1183	76	14
1184	74	11
1185	74	18
1186	73	22
1187	74	20
1188	74	19
1189	70	22
1190	71	23
1191	73	19
1192	73	19
1193	72	20
1194	64	60
1195	70	39
1196	66	56
1197	68	64
1198	30	68
1199	70	38

Time(s)	Normalized speed (percent)	Normalized torque (percent) [1]
1200	66	47
1201	76	14
1202	74	18
1203	69	46
1204	68	62
1205	68	62
1206	68	62
1207	68	62
1208	68	62
1209	68	62
1210	54	50
1211	41	37
1212	27	25
1213	14	12
1214	0	0
1215	0	0
1216	0	0
1217	0	0
1218	0	0
1219	0	0
1220	0	0
1221	0	0
1222	0	0
1223	0	0
1224	0	0
1225	0	0
1226	0	0
1227	0	0
1228	0	0
1229	0	0
1230	0	0
1231	0	0
1232	0	0
1233	0	0
1234	0	0
1235	0	0
1236	0	0
1237	0	0
1238	0	0

[1] The percent torque is relative to maximum torque at the commanded engine speed.

[69 FR 39213, June 29, 2004, as amended at 70 FR 40465, July 13, 2005]

PART 1042—CONTROL OF EMISSIONS FROM NEW AND IN-USE MARINE COMPRESSION-IGNITION ENGINES AND VESSELS

Subpart A—Overview and Applicability

Sec.
1042.1 Applicability.
1042.2 Who is responsible for compliance?
1042.5 Exclusions.
1042.10 Organization of this part.
1042.15 Do any other regulation parts apply to me?
1042.30 Submission of information.

Subpart B—Emission Standards and Related Requirements

1042.101 Exhaust emission standards for Category 1 engines and Category 2 engines.
1042.104 Exhaust emission standards for Category 3 engines.
1042.107 Evaporative emission standards.
1042.110 Recording reductant use and other diagnostic functions.
1042.115 Other requirements.
1042.120 Emission-related warranty requirements.
1042.125 Maintenance instructions.
1042.130 Installation instructions for vessel manufacturers.
1042.135 Labeling.
1042.140 Maximum engine power, displacement, power density, and maximum in-use engine speed.
1042.145 Interim provisions.

Subpart C—Certifying Engine Families

1042.201 General requirements for obtaining a certificate of conformity.
1042.205 Application requirements.
1042.210 Preliminary approval.
1042.220 Amending maintenance instructions.
1042.225 Amending applications for certification.
1042.230 Engine families.
1042.235 Emission testing related to certification.
1042.240 Demonstrating compliance with exhaust emission standards.
1042.245 Deterioration factors.
1042.250 Recordkeeping and reporting.
1042.255 EPA decisions.

Subpart D—Testing Production-Line Engines

1042.301 General provisions.
1042.302 Applicability of this subpart for Category 3 engines.
1042.305 Preparing and testing production-line engines.
1042.310 Engine selection for Category 1 and Category 2 engines.
1042.315 Determining compliance.
1042.320 What happens if one of my production-line engines fails to meet emission standards?
1042.325 What happens if an engine family fails the production-line testing requirements?
1042.330 Selling engines from an engine family with a suspended certificate of conformity.
1042.335 Reinstating suspended certificates.
1042.340 When may EPA revoke my certificate under this subpart and how may I sell these engines again?
1042.345 Reporting.
1042.350 Recordkeeping.

Subpart E—In-Use Testing

1042.401 General Provisions.

Subpart F—Test Procedures

1042.501 How do I run a valid emission test?
1042.505 Testing engines using discrete-mode or ramped-modal duty cycles.
1042.515 Test procedures related to not-to-exceed standards.
1042.520 What testing must I perform to establish deterioration factors?
1042.525 How do I adjust emission levels to account for infrequently regenerating aftertreatment devices?

Subpart G—Special Compliance Provisions

1042.601. General compliance provisions for marine engines and vessels.
1042.605 Dressing engines already certified to other standards for nonroad or heavy-duty highway engines for marine use.
1042.610 Certifying auxiliary marine engines to land-based standards.
1042.615 Replacement engine exemption.
1042.620 Engines used solely for competition.
1042.625 Special provisions for engines used in emergency applications.
1042.630 Personal-use exemption.
1042.635 National security exemption.
1042.640 Special provisions for branded engines.
1042.650 Exemptions for migratory vessels and auxiliary engines on Category 3 vessels.
1042.655 Special certification provisions for—Category 3 engines with aftertreatment.
1042.660 Requirements for vessel manufacturers, owners, and operators.
1042.670 Special provisions for gas turbine engines.

Subpart H—Averaging, Banking, and Trading for Certification

1042.701 General provisions.
1042.705 Generating and calculating emission credits.
1042.710 Averaging emission credits.
1042.715 Banking emission credits.
1042.720 Trading emission credits.
1042.725 Information required for the application for certification.
1042.730 ABT reports.
1042.735 Recordkeeping.
1042.745 Noncompliance.

Subpart I—Special Provisions for Remanufactured Marine Engines

1042.801 General provisions.
1042.810 Requirements for owner/operators and installers during remanufacture.
1042.815 Demonstrating availability.
1042.820 Emission standards and required emission reductions for remanufactured engines.
1042.825 Baseline determination.
1042.830 Labeling.
1042.835 Certification of remanufactured engines.
1042.836 Marine certification of locomotive remanufacturing systems.
1042.840 Application requirements for remanufactured engines.
1042.845 Remanufactured engine families.
1042.850 Exemptions and hardship relief.

Subpart J—Definitions and Other Reference Information

1042.901 Definitions.
1042.905 Symbols, acronyms, and abbreviations.
1042.910 Reference materials.
1042.915 Confidential information.
1042.920 Hearings.
1042.925 Reporting and recordkeeping requirements.
APPENDIX I TO PART 1042—SUMMARY OF PREVIOUS EMISSION STANDARDS
APPENDIX II TO PART 1042—STEADY-STATE DUTY CYCLES
APPENDIX III TO PART 1042—NOT-TO-EXCEED ZONES

AUTHORITY: 42 U.S.C. 7401–7671q.

SOURCE: 73 FR 37243, June 30, 2008, unless otherwise noted.

Subpart A—Overview and Applicability

§ 1042.1 Applicability.

Except as provided in this section and § 1042.5, the regulations in this part 1042 apply for all new compression-ignition marine engines (including new engines deemed to be compression-ignition engines under this section) and vessels containing such engines. *See* § 1042.901 for the definitions of engines and vessels considered to be new.

(a) The emission standards of this part 1042 for freshly manufactured engines apply for new marine engines starting with the model years noted in the following tables:

TABLE 1 TO § 1042.1—PART 1042 APPLICABILITY BY MODEL YEAR

Engine category	Maximum engine power [a]	Displacement (L/cyl) or application	Model year
Category 1	kW < 75	disp. < 0.9	[b] 2009

TABLE 1 TO § 1042.1—PART 1042 APPLICABILITY BY MODEL YEAR—Continued

Engine category	Maximum engine power [a]	Displacement (L/cyl) or application	Model year
	75 ≤ kW ≤ 3700	disp. < 0.9	2012
		0.9 ≤ disp. < 1.2	2013
		1.2 ≤ disp. < 2.5	2014
		2.5 ≤ disp. < 3.5	2013
		3.5 ≤ disp. < 7.0	2012
	kW > 3700	disp. < 7.0	2014
Category 2	kW ≤ 3700	7.0 < disp. < 15.0	2013
	kW > 3700	7.0 ≤ disp. < 15.0	2014
	All	15 ≤ disp. < 30	2014
Category 3	All	disp. ≥ *30*	*2011*

[a] *See* § 1042.140, which describes how to determine maximum engine power.
[b] *See* Table 1 of § 1042.101 for the first model year in which this part 1042 applies for engines with maximum engine power below 75 kW and displacement at or above 0.9 L/cyl.

(b) New engines with maximum engine power below 37 kW and originally manufactured and certified before the model years identified in Table 1 to this section are subject to emission standards and requirements of 40 CFR part 89. The provisions of this part 1042 do not apply for such engines certified under 40 CFR part 89, except as follows beginning June 29, 2010:

(1) The allowances of this part apply.

(2) The definitions of ''new marine engine'' and ''model year'' apply.

(c) Freshly manufactured engines with maximum engine power at or above 37 kW and originally manufactured and certified before the model years identified in Table 1 to this section are subject to emission standards and requirements of 40 CFR part 94. The provisions of this part 1042 do not apply for such engines certified under 40 CFR part 89, except as follows beginning June 29, 2010:

(1) The allowances of this part apply.

(2) The definitions of ''new marine engine'' and ''model year'' apply.

(3) The remanufacturing provisions in subpart I of this part may apply for remanufactured engines originally manufactured in model years before the model years identified in Table 1 to this section.

(4) 40 CFR part 94 specifies other provisions from this part 1042 that apply.

(d) Engines with model years before those specified in Table 1 to this section are generally subject to the Tier 1 or Tier 2 standards of 40 CFR part 94. Such engines may be certified to those standards under this part 1042. All the provisions of this part except the emission standards apply to such engines if they are certified under this part. Note that engines subject to, but not certified to, the standards of 40 CFR part 94 are subject to the requirements and prohibitions of this part and 40 CFR part 1068.

(e) The requirements of subpart I of this part apply to remanufactured Category 1 and Category 2 engines beginning July 7, 2008.

(f) The marine engines listed in this paragraph (f) are subject to all the requirements of this part even if they do not meet the definition of ''compression-ignition'' in § 1042.901. The following engines are deemed to be compression-ignition engines for purposes of this part:

(1) Marine engines powered by natural gas or other gaseous fuels with maximum engine power at or above 250 kW. Note that gaseous-fueled engines with maximum engine power below 250 kW may or may not meet the definition of ''compression-ignition'' in § 1042.901.

(2) Marine gas turbine engines.

(3) Other marine internal combustion engines that do not meet the definition of ''spark-ignition'' in § 1042.901.

(g) Some of the provisions of this part may apply for other engines as specified in 40 CFR part 1043.

[75 FR 22994, Apr. 30, 2010]

EFFECTIVE DATE NOTE: At 76 FR 37977, June 28, 2011, § 1042.1 was amended by adding paragraph (h), effective August 29, 2011. For the convenience of the user, the added text is set forth as follows:

§ 1042.1 Applicability

* * * * *

(h) Starting with the model years noted in Table 1 of this section, all of the subparts of this part, except subpart I, apply as specified in 40 CFR part 60, subpart IIII, to freshly manufactured stationary compression-ignition engines subject to the standards of 40 CFR part 60, subpart IIII, that have a per-cylinder displacement at or above 10 liters and below 30 liters per cylinder. Such engines are considered Category 2 engines for purposes of this part 1042.

§ 1042.2 Who is responsible for compliance?

The regulations in this part 1042 contain provisions that affect both engine manufacturers and others. However, the requirements of this part, other than those of subpart I of this part, are generally addressed to the engine manufacturer for freshly manufactured marine engines or other certificate holders. The term ''you'' generally means the engine manufacturer, as defined in § 1042.901, especially for issues related to certification (including production-line testing, reporting, *etc.*).

[75 FR 22995, Apr. 30, 2010]

§ 1042.5 Exclusions.

This part does not apply to the following marine engines:

(a) *Foreign vessels.* The requirements and prohibitions of this part do not apply to engines installed on foreign vessels, as defined in § 1042.901. Note however, that the requirements and prohibitions of this part do apply to engines installed on any formerly foreign vessels that are reflagged as U.S.-flagged vessels.

(b) *Hobby engines.* Engines installed in reduced-scale models of vessels that are not capable of transporting a person are not subject to the provisions of this part 1042.

(c) *Recreational gas turbine engines.* The requirements and prohibitions of this part do not apply to gas turbine engines installed on recreational vessels, as defined in § 1042.901.

[73 37243, June 30, 2008, as amended at 73 FR 59192, Oct. 8, 2008; 75 FR 22995, Apr. 30, 2010]

§ 1042.10 Organization of this part.

This part 1042 is divided into the following subparts:

(a) Subpart A of this part defines the applicability of this part 1042 and gives an overview of regulatory requirements.

(b) Subpart B of this part describes the emission standards and other requirements that must be met to certify engines under this part. Note that § 1042.145 discusses certain interim requirements and compliance provisions that apply only for a limited time.

(c) Subpart C of this part describes how to apply for a certificate of conformity.

(d) Subpart D of this part describes general provisions for testing production-line engines.

(e) Subpart E of this part describes general provisions for testing in-use engines.

(f) Subpart F of this part and 40 CFR 1065 describe how to test your engines.

(g) Subpart G of this part and 40 CFR part 1068 describe requirements, prohibitions, and other provisions that apply to engine manufacturers, vessel manufacturers, owners, operators, rebuilders, and all others.

(h) Subpart H of this part describes how you may generate and use emission credits to certify your engines.

(i) Subpart I of this part describes how these regulations apply for remanufactured engines.

(j) Subpart J of this part contains definitions and other reference information.

§ 1042.15 Do any other regulation parts apply to me?

(a) Part 1043 of this chapter describes requirements related to international pollution prevention that apply for some of the engines subject to this part.

(b) The evaporative emission requirements of part 1060 of this chapter apply

to vessels that include installed engines fueled with a volatile liquid fuel as specified in § 1042.107. (Note: Conventional diesel fuel is not considered to be a volatile liquid fuel.)

(c) Part 1065 of this chapter describes procedures and equipment specifications for testing engines to measure exhaust emissions. Subpart F of this part 1042 describes how to apply the provisions of part 1065 of this chapter to determine whether engines meet the exhaust emission standards in this part.

(d) The requirements and prohibitions of part 1068 of this chapter apply to everyone, including anyone who manufactures, imports, installs, owns, operates, or rebuilds any of the engines subject to this part 1042, or vessels containing these engines. Part 1068 of this chapter describes general provisions, including these seven areas:

(1) Prohibited acts and penalties for engine manufacturers, vessel manufacturers, and others.

(2) Rebuilding and other aftermarket changes.

(3) Exclusions and exemptions for certain engines.

(4) Importing engines.

(5) Selective enforcement audits of your production.

(6) Defect reporting and recall.

(7) Procedures for hearings.

(e) Other parts of this chapter apply if referenced in this part.

[75 FR 22995, Apr. 30, 2010]

§ 1042.30 Submission of information.

(a) This part includes various requirements to record data or other information. Refer to § 1042.925 and 40 CFR 1068.25 regarding recordkeeping requirements. Unless we specify otherwise, store these records in any format and on any media and keep them readily available for one year after you send an associated application for certification, or one year after you generate the data if they do not support an application for certification. You must promptly send us organized, written records in English if we ask for them. We may review them at any time.

(b) The regulations in § 1042.255 and 40 CFR 1068.101 describe your obligation to report truthful and complete information and the consequences of failing to meet this obligation. This includes information not related to certification.

(c) Send all reports and requests for approval to the Designated Compliance Officer (*see* § 1042.901).

(d) Any written information we require you to send to or receive from another company is deemed to be a required record under this section. Such records are also deemed to be submissions to EPA. We may require you to send us these records whether or not you are a certificate holder.

[75 FR 22996, Apr. 30, 2010]

Subpart B—Emission Standards and Related Requirements

§ 1042.101 Exhaust emission standards for Category 1 engines and Category 2 engines.

(a) *Duty-cycle standards.* Exhaust emissions from your engines may not exceed emission standards, as follows:

(1) Measure emissions using the test procedures described in subpart F of this part.

(2) The following CO emission standards in this paragraph (a)(2) apply starting with the applicable model year identified in § 1042.1:

(i) 8.0 g/kW-hr for engines below 8 kW.

(ii) 6.6 g/kW-hr for engines at or above 8 kW and below 19 kW.

(iii) 5.5 g/kW-hr for engines at or above 19 kW and below 37 kW.

(iv) 5.0 g/kW-hr for engines at or above 37 kW.

(3) Except as described in paragraphs (a)(4) and (5) of this section, the Tier 3 standards for PM and NO_X+HC emissions are described in the following tables:

Table 1 to §1042.101— Tier 3 Standards for Category 1 Engines Below 3700 kW [a]

Power Density and Application	Displacement (L/cyl)	Maximum Engine Power	Model Year	PM (g/kW-hr)	NOx+HC (g/kW-hr) [b]
All	disp.< 0.9	kW <19	2009+	0.40	7.5
		19 ≤ kW < 75	2009-2013	0.30	7.5
			2014+	0.30	4.7
Commercial engines with kW/L ≤ 35[b]	disp.< 0.9	kW ≥ 75	2012+	0.14	5.4
	0.9 ≤ disp. < 1.2	all	2013+	0.12	5.4
	1.2 ≤ disp. < 2.5	kW < 600	2014-2017	0.11	5.6
			2018+	0.10	5.6
		kW ≥ 600	2014+	0.11	5.6
	2.5 ≤ disp. < 3.5	kW < 600	2013-2017	0.11	5.6
			2018+	0.10	5.6
		kW ≥ 600	2013+	0.11	5.6
	3.5 ≤ disp.< 7.0	kW < 600	2012-2017	0.11	5.8
			2018+	0.10	5.8
		kW ≥ 600	2012+	0.11	5.8
Commercial engines with kW/L > 35 and all recreational engines[b]	disp. < 0.9	kW ≥ 75	2012+	0.15	5.8
	0.9 ≤ disp. < 1.2	all	2013+	0.14	5.8
	1.2 ≤ disp. < 2.5		2014+	0.12	5.8
	2.5 ≤ disp. < 3.5		2013+	0.12	5.8
	3.5 ≤ disp. < 7.0		2012+	0.11	5.8

[a] No Tier 3 standards apply for commercial Category 1 engines at or above 3700 kW. See §1042.1(c) and paragraph (a)(7) of this section for the standards that apply for these engines.
[b] The applicable NOx+HC standards specified for Tier 2 engines in Appendix I of this part continue to apply instead of the values noted in the table for commercial engines at or above 2000 kW. FELs for these engines may not be higher than the Tier 1 NOx standard specified in Appendix I of this part.

TABLE 2 TO § 1042.101—TIER 3 STANDARDS FOR CATEGORY 2 ENGINES BELOW 3700 KW [A]

Displacement (L/cyl)	Maximum engine power	Model year	PM (g/kW-hr)	NO_X+HC (g/kW-hr)
7.0 ≤ disp. < 15.0	kW < 2000	2013+	0.14	6.2
	2000 ≤ kW < 3700	2013+	0.14	[b] 7.8
15.0 ≤ disp. < 20.0 [c]	kW < 2000	2014+	0.34	7.0
20.0 ≤ disp. < 25.0 [c]	kW < 2000	2014+	0.27	9.8
25.0 ≤ disp. < 30.0 [c]	kW < 2000	2014+	0.27	11.0

[a] No Tier 3 standards apply for Category 2 engines at or above 3700 kW. See § 1042.1(c) and paragraph (a)(7) of this section for the standards that apply for these engines.
[b] For engines subject to the 7.8 g/kW-hr NO_X+HC standard, FELs may not be higher than the Tier 1 NO_X standard specified in Appendix I of this part.

[c] No Tier 3 standards apply for Category 2 engines with per-cylinder displacement above 15.0 liters if maximum engine power is at or above 2000 kW. See § 1042.1(c) and paragraph (a)(7) of this section for the standards that apply for these engines.

(4) For Tier 3 engines at or above 19 kW and below 75 kW with displacement below 0.9 L/cyl, you may alternatively certify some or all of your engine families to a PM emission standard of 0.20 g/kW-hr and a NO_X+HC emission standard of 5.8 g/kW-hr for 2014 and later model years.

(5) Starting with the 2014 model year, recreational marine engines at or above 3700 kW (with any displacement) must be certified under this part 1042 to the Tier 3 standards specified in this section for 3.5 to 7.0 L/cyl recreational marine engines.

(6) Interim Tier 4 PM standards apply for 2014 and 2015 model year engines between 2000 and 3700 kW as specified in this paragraph (a)(6). These engines are considered to be Tier 4 engines.

(i) For Category 1 engines, the Tier 3 PM standards from Table 1 to this section continue to apply. PM FELs for these engines may not be higher than the applicable Tier 2 PM standards specified in Appendix I of this part.

(ii) For Category 2 engines with per-cylinder displacement below 15.0 liters, the Tier 3 PM standards from Table 2 to this section continue to apply. PM FELs for these engines may not be higher than 0.27 g/kW-hr.

(iii) For Category 2 engines with per-cylinder displacement at or above 15.0 liters, the PM standard is 0.34 g/kW-hr for engines at or above 2000 kW and below 3300 kW, and 0.27 g/kW-hr for engines at or above 3300 kW and below 3700 kW. PM FELs for these engines may not be higher than 0.50 g/kW-hr.

(7) Except as described in paragraph (a)(8) of this section, the Tier 4 standards for PM, NO_X, and HC emissions are described in the following table:

TABLE 3 TO § 1042.101—TIER 4 STANDARDS FOR CATEGORY 2 AND COMMERCIAL CATEGORY 1 ENGINES ABOVE 600 KW

Maximum engine power	Displacement (L/cyl)	Model year	PM (g/kW-hr)	NO_X (g/kW-hr)	HC (g/kW-hr)
600 ≤ kW < 1400	all	2017+	0.04	1.8	0.19
1400 ≤ kW < 2000	all	2016+	0.04	1.8	0.19
2000 ≤ kW < 3700 [a]	all	2014+	0.04	1.8	0.19
kW ≥ 3700	disp. <15.0	2014–2015	0.12	1.8	0.19
	15.0 ≤ disp.< 30.0	2014–2015	0.25	1.8	0.19
	all	2016+	0.06	1.8	0.19

[a] See paragraph (a)(6) of this section for interim PM standards that apply for model years 2014 and 2015 for engines between 2000 and 3700 kW. The Tier 4 NO_X FEL cap for engines at or above 2000 kW and below 3700 kW is 7.0 g/kW-hr. Starting in the 2016 model year, the Tier 4 PM FEL cap for engines at or above 2000 kW and below 3700 kW is 0.34 g/kW-hr.

(8) The following optional provisions apply for complying with the Tier 3 and Tier 4 standards specified in paragraphs (a)(3) and (6) of this section:

(i) You may use NO_X credits accumulated through the ABT program to certify Tier 4 engines to a NO_X+HC emission standard of 1.9 g/kW-hr instead of the NO_X and HC standards that would otherwise apply by certifying your family to a NO_X+HC FEL. Calculate the NO_X credits needed as specified in subpart H of this part using the NO_X+HC emission standard and FEL in the calculation instead of the otherwise applicable NO_X standard and FEL. You may not generate credits relative to the alternate standard or certify to the standard without using credits.

(ii) For engines below 1000 kW, you may delay complying with the Tier 4 standards in the 2017 model year for up to nine months, but you must comply no later than October 1, 2017.

(iii) For engines at or above 3700 kW, you may delay complying with the Tier 4 standards in the 2016 model year for up to twelve months, but you must comply no later than December 31, 2016.

(iv) For Category 2 engines at or above 1400 kW, you may alternatively comply with the Tier 3 and Tier 4 standards specified in Table 4 of this section instead of the NO_X, HC, NO_X+HC, and PM standards specified in paragraphs (a)(3) and (6) of this section.

The CO standards specified in paragraph (a)(2) of this section apply without regard to whether you choose this option. If you choose this option, you must do so for all engines at or above 1400 kW in the same displacement category (that is, 7–15, 15–20, 20–25, or 25–30 liters per cylinder) in model years 2012 through 2015.

TABLE 4 TO § 1042.101—OPTIONAL TIER 3 AND TIER 4 STANDARDS FOR CATEGORY 2 ENGINES AT OR ABOVE 1400 kW

Tier	Maximum engine power	Model year	PM (g/kW-hr)	NO_X (g/kW-hr)	HC (g/kW-hr)
Tier 3	kW ≥ 1400	2012–2014	0.14	7.8 NO_X+HC	
Tier 4	1400 ≤ kW < 3700	2015	0.04	1.8	0.19
	kW ≥ 3700	2015	0.06	1.8	0.19

(b) *Averaging, banking, and trading.* You may generate or use emission credits under the averaging, banking, and trading (ABT) program as described in subpart H of this part for demonstrating compliance with NO_X, NO_X+HC, and PM emission standards for Category 1 and Category 2 engines. You may also use NO_X or NO_X+HC emission credits to comply with the alternate NO_X+HC standard in paragraph (a)(8)(i) of this section. Generating or using emission credits requires that you specify a family emission limit (FEL) for each pollutant you include in the ABT program for each engine family. These FELs serve as the emission standards for the engine family with respect to all required testing instead of the standards specified in paragraph (a) of this section. The FELs determine the not-to-exceed standards for your engine family, as specified in paragraph (c) of this section. Unless otherwise specified, the following FEL caps apply:

(1) FELs for Tier 3 engines may not be higher than the applicable Tier 2 standards specified in Appendix I of this part.

(2) FELs for Tier 4 engines may not be higher than the applicable Tier 3 standards specified in paragraph (a)(3) of this section.

(c) *Not-to-exceed standards.* Except as noted in § 1042.145(e), exhaust emissions from all engines subject to the requirements of this part may not exceed the not-to-exceed (NTE) standards as follows:

(1) Use the following equation to determine the NTE standards:

(i) NTE standard for each pollutant = STD × M.

Where:

STD = The standard specified for that pollutant in this section if you certify without using ABT for that pollutant; or the FEL for that pollutant if you certify using ABT.

M = The NTE multiplier for that pollutant.

(ii) Round each NTE standard to the same number of decimal places as the emission standard.

(2) Determine the applicable NTE zone and subzones as described in § 1042.515. Determine NTE multipliers for specific zones and subzones and pollutants as follows:

(i) For commercial marine engines certified using the duty cycle specified in § 1042.505(b)(1), except for variable-speed propulsion marine engines used with controllable-pitch propellers or with electrically coupled propellers, apply the following NTE multipliers:

(A) Subzone 1: 1.2 for Tier 3 NO_X+HC standards.

(B) Subzone 1: 1.5 for Tier 4 standards and Tier 3 PM and CO standards.

(C) Subzone 2: 1.5 for NO_X+HC standards.

(D) Subzone 2: 1.9 for PM and CO standards.

(ii) For recreational marine engines certified using the duty cycle specified in § 1042.505(b)(2), except for variable-speed marine engines used with controllable-pitch propellers or with electrically coupled propellers, apply the following NTE multipliers:

(A) Subzone 1: 1.2 for Tier 3 NO_X+HC standards.

(B) Subzone 1: 1.5 for Tier 4 standards and Tier 3 PM and CO standards.

(C) Subzones 2 and 3: 1.5 for NO_X+HC standards.

(D) Subzones 2 and 3: 1.9 for PM and CO standards.

(iii) For variable-speed marine engines used with controllable-pitch propellers or with electrically coupled propellers that are certified using the duty cycle specified in § 1042.505(b)(1), (2), or (3), apply the following NTE multipliers:

(A) Subzone 1: 1.2 for Tier 3 NO_X+HC standards.

(B) Subzone 1: 1.5 for Tier 4 standards and Tier 3 PM and CO standards.

(C) Subzone 2: 1.5 for NO_X+HC standards.

(D) Subzone 2: 1.9 for PM and CO standards. However, there is no NTE standard in Subzone 2b for PM emissions if the engine family's applicable standard for PM is at or above 0.07 g/kW-hr.

(iv) For constant-speed engines certified using a duty cycle specified in § 1042.505(b)(3) or (4), apply the following NTE multipliers:

(A) Subzone 1: 1.2 for Tier 3 NO_X+HC standards.

(B) Subzone 1: 1.5 for Tier 4 standards and Tier 3 PM and CO standards.

(C) Subzone 2: 1.5 for NO_X+HC standards.

(D) Subzone 2: 1.9 for PM and CO standards. However, there is no NTE standard for PM emissions if the engine family's applicable standard for PM is at or above 0.07 g/kW-hr.

(v) For variable-speed auxiliary marine engines certified using the duty cycle specified in § 1042.505(b)(5)(ii) or (iii):

(A) Subzone 1: 1.2 for Tier 3 NO_X+HC standards.

(B) Subzone 1: 1.5 for Tier 4 standards and Tier 3 PM and CO standards.

(C) Subzone 2: 1.2 for Tier 3 NO_X+HC standards.

(D) Subzone 2: 1.5 for Tier 4 standards and Tier 3 PM and CO standards. However, there is no NTE standard for PM emissions if the engine family's applicable standard for PM is at or above 0.07 g/kW-hr.

(3) The NTE standards apply to your engines whenever they operate within the NTE zone for an NTE sampling period of at least thirty seconds, during which only a single operator demand set point may be selected. Engine operation during a change in operator demand is excluded from any NTE sampling period. There is no maximum NTE sampling period.

(4) Collect emission data for determining compliance with the NTE standards using the procedures described in subpart F of this part.

(5) You may ask us to accept as compliant an engine that does not fully meet specific requirements under the applicable NTE standards where such deficiencies are necessary for safety.

(d) *Fuel types*. The exhaust emission standards in this section apply for engines using the fuel type on which the engines in the engine family are designed to operate.

(1) You must meet the numerical emission standards for hydrocarbons in this section based on the following types of hydrocarbon emissions for engines powered by the following fuels:

(i) Alcohol-fueled engines must comply with Tier 3 HC standards based on THCE emissions and with Tier 4 standards based on NMHCE emissions.

(ii) Natural gas-fueled engines must comply with HC standards based on NMHC emissions.

(iii) Diesel-fueled and all other engines not described in paragraph (d)(1)(i) or (ii) of this section must comply with Tier 3 HC standards based on THC emissions and with Tier 4 standards based on NMHC emissions.

(2) Tier 3 and later engines must comply with the exhaust emission standards when tested using test fuels containing 15 ppm or less sulfur (ultra low-sulfur diesel fuel). Manufacturers may use low-sulfur diesel fuel (without request) to certify an engine otherwise requiring an ultra low-sulfur test fuel; however, emissions may not be corrected to account for the effects of using higher sulfur fuel.

(3) Engines designed to operate using residual fuel must comply with the standards and requirements of this part when operated using residual fuel in addition to complying with the requirements of this part when operated using diesel fuel.

(e) *Useful life*. Your engines must meet the exhaust emission standards of this section over their full useful life, expressed as a period in years or hours of engine operation, whichever comes first.

(1) The minimum useful life values are as follows, except as specified by paragraph (e)(2) or (3) of this section:

(i) 10 years or 1,000 hours of operation for recreational Category 1 engines

(ii) 5 years or 3,000 hours of operation for commercial engines below 19 kW.

(iii) 7 years or 5,000 hours of operation for commercial engines at or above 19 kW and below 37kW.

(iv) 10 years or 10,000 hours of operation for commercial Category 1 engines at or above 37 kW.

(v) 10 years or 20,000 hours of operation for Category 2 engines.

(2) Specify a longer useful life in hours for an engine family under either of two conditions:

(i) If you design, advertise, or market your engine to operate longer than the minimum useful life (your recommended hours until rebuild indicates a longer design life).

(ii) If your basic mechanical warranty is longer than the minimum useful life.

(3) You may request in your application for certification that we approve a shorter useful life for an engine family. We may approve a shorter useful life, in hours of engine operation but not in years, if we determine that these engines will rarely operate longer than the shorter useful life. If engines identical to those in the engine family have already been produced and are in use, your demonstration must include documentation from such in-use engines. In other cases, your demonstration must include an engineering analysis of information equivalent to such in-use data, such as data from research engines or similar engine models that are already in production. Your demonstration must also include any overhaul interval that you recommend, any mechanical warranty that you offer for the engine or its components, and any relevant customer design specifications. Your demonstration may include any other relevant information. The useful life value may not be shorter than any of the following:

(i) 1,000 hours of operation.

(ii) Your recommended overhaul interval.

(iii) Your mechanical warranty for the engine.

(f) *Applicability for testing*. The duty-cycle emission standards in this subpart apply to all testing performed according to the procedures in § 1042.505, including certification, production-line, and in-use testing. The not-to-exceed standards apply for all testing performed according to the procedures of subpart F of this part.

[73 37243, June 30, 2008, as amended at 73 FR 59192, Oct. 8, 2008; 74 FR 8425, Feb. 24, 2009; 75 FR 22996, Apr. 30, 2010]

§ 1042.104 Exhaust emission standards for Category 3 engines.

(a) *Duty-cycle standards*. Exhaust emissions from your engines may not exceed emission standards, as follows:

(1) Measure emissions using the test procedures described in subpart F of this part. Note that while no PM standards apply for Category 3 engines, PM emissions must be measured for certification testing and reported under § 1042.205. Note also that you are not required to measure PM emissions for other testing.

(2) NO_X standards apply based on the engine's model year and maximum in-use engine speed as shown in the following table:

TABLE 1 TO § 1042.104—NO_X EMISSION STANDARDS FOR CATEGORY 3 ENGINES (G/KW-HR)

Emission standards	Model year	Maximum in-use engine speed		
		Less than 130 RPM	130–2000 RPM [a]	Over 2000 RPM
Tier 1	2004–2010 [b]	17.0	$45.0 \cdot n^{(-0.20)}$	9.8
Tier 2	2011–2015	14.4	$44.0 \cdot n^{(-0.23)}$	7.7
Tier 3	2016 and later	3.4	$9.0 \cdot n^{(-0.20)}$	2.0

[a] Applicable standards are calculated from n (maximum in-use engine speed, in RPM, as specified in § 1042.140). Round the standards to one decimal place.

[b] Tier 1 NO_X standards apply as specified in 40 CFR part 94 for engines originally manufactured in model years 2004 through 2010. They are shown here only for reference.

(3) The HC standard for Tier 2 and later engines is 2.0 g/kW-hr. This standard applies as follows:

(i) Alcohol-fueled engines must comply with HC standards based on THCE emissions.

(ii) Natural gas-fueled engines must comply with HC standards based on NMHC emissions.

(iii) Diesel-fueled and all other engines not described in paragraph (a)(3)(i) or (ii) of this section must comply with HC standards based on THC emissions.

(4) The CO standard for Tier 2 and later engines is 5.0 g/kW-hr.

(b) *Averaging, banking, and trading.* Category 3 engines are not eligible for participation in the averaging, banking, and trading (ABT) program as described in subpart H of this part.

(c) *Mode caps.* Measured NO_X emissions may not exceed the cap specified in this paragraph (c) for any applicable duty-cycle test modes with power greater than 10 percent maximum engine power. Calculate the mode cap by multiplying the applicable NO_X standard by 1.5 and rounding to the nearest 0.1 g/kW-hr. Note that mode caps do not apply for pollutants other than NO_X and do not apply for any modes of operation outside of the applicable duty cycles in §1042.505. Category 3 engines are not subject to not-to-exceed standards.

(d) *Useful life.* Your engines must meet the exhaust emission standards of this section over their full useful life, expressed as a period in years or hours of engine operation, whichever comes first.

(1) The minimum useful life value is 3 years or 10,000 hours of operation.

(2) Specify a longer useful life in hours for an engine family under either of two conditions:

(i) If you design, advertise, or market your engine to operate longer than the minimum useful life (your recommended hours until rebuild indicates a longer design life).

(ii) If your basic mechanical warranty is longer than the minimum useful life.

(e) *Applicability for testing.* The duty-cycle emission standards in this section apply to all testing performed according to the procedures in §1042.505, including certification, production-line, and in-use testing. *See* paragraph (g) of this section for standards that apply for certain other test procedures, such as some production-line testing.

(f) *Domestic engines.* Engines installed on vessels excluded from 40 CFR part 1043 because they operate only domestically may not be certified for use with residual fuels.

(g) *Alternate installed-engine standards.* NO_X emissions may not exceed the standard specified in this paragraph (g) for test of engines installed on vessels when you are unable to operate the engine at the test points for the specified duty cycle, and you approximate these points consistent with the specifications of section 6 of Appendix 8 to the NO_X Technical Code (incorporated by reference in §1042.910). Calculate the alternate installed-engine standard by multiplying the applicable NO_X standard by 1.1 and rounding to the nearest 0.1 g/kW-hr.

[75 FR 22997, Apr. 30, 2010]

§1042.107 Evaporative emission standards.

(a) There are no evaporative emission standards for diesel-fueled engines, or engines using other nonvolatile or nonliquid fuels (for example, natural gas).

(b) If an engine uses a volatile liquid fuel, such as methanol, the engine's fuel system and the vessel in which the engine is installed must meet the evaporative emission requirements of 40 CFR part 1045 that apply with respect to spark-ignition engines. Manufacturers subject to evaporative emission standards must meet the requirements of 40 CFR 1045.112 as described in 40 CFR part 1060 and do all the following things in the application for certification:

(1) Describe how evaporative emissions are controlled.

(2) Present test data to show that fuel systems and vessels meet the evaporative emission standards we specify in this section if you do not use design-based certification under 40 CFR 1060.240. Show these figures before and after applying deterioration factors, where applicable.

[73 FR 59193, Oct. 8, 2008]

§ 1042.110 Recording reductant use and other diagnostic functions.

(a) Engines equipped with SCR systems using a reductant other than the engine's fuel must meet the following requirements:

(1) The diagnostic system must monitor reductant quality and tank levels and alert operators to the need to refill the reductant tank before it is empty, or to replace the reductant if it does not meet your concentration specifications. Unless we approve other alerts, use a malfunction-indicator light (MIL) and an audible alarm. You do not need to separately monitor reductant quality if you include an exhaust NO_X sensor (or other sensor) that allows you to determine inadequate reductant quality. However, tank level must be monitored in all cases.

(2) The onboard computer log must record in nonvolatile computer memory all incidents of engine operation with inadequate reductant injection or reductant quality. Use good engineering judgment to ensure that the operator can readily access the information to submit the report required by § 1042.660. For example, you may meet this requirement by documenting the incident in a text file that can be downloaded or printed by the operator.

(3) SCR systems must also conform to the provisions of paragraph (d) of this section if they are equipped with on-off controls as allowed under § 1042.115(g).

(b) If you determine your emission controls have failure modes that may reasonably be expected to affect safety, equip the engines with diagnostic features that will alert the operator to such failures. Use good engineering judgment to alert the operator before the failure occurs.

(c) You may equip your engine with other diagnostic features. If you do, they must be designed to allow us to read and interpret the codes. Note that §§ 1042.115 and 1042.205 require that you provide us any information needed to read, record, and interpret all the information broadcast by an engine's onboard computers and electronic control units.

(d) For Category 3 engines equipped with on-off NO_X controls (as allowed by § 1042.115(g)), you must also equip your engine to continuously monitor NO_X concentrations in the exhaust. *See* § 1042.650 to determine if this requirement applies for a given Category 1 or Category 2 engine. Use good engineering judgment to alert operators if measured NO_X concentrations indicate malfunctioning emission controls. Record any such operation in nonvolatile computer memory. You are not required to monitor NO_X concentrations during operation for which the emission controls may be disabled under § 1042.115(g). For the purpose of this paragraph (d), ''malfunctioning emission controls'' means any condition in which the measured NO_X concentration exceeds the highest value expected when the engine is in compliance with the installed engine standard of § 1042.104(g). Use good engineering judgment to determine these expected values during production-line testing of the engine using linear interpolation between test points and accounting for the degree to which the cycle-weighted emissions of the engine are below the standard. You may also use additional intermediate test points measured during the production-line test. Note that the provisions of paragraph (a) of this section also apply for SCR systems covered by this paragraph (d). For engines subject to both the provisions of paragraph (a) of this section and this paragraph (d), use good engineering judgment to integrate diagnostic features to comply with both paragraphs.

[73 FR 37243, June 30, 2008, as amended at 75 FR 22998, Apr. 30, 2010]

§ 1042.115 Other requirements.

Engines that are required to comply with the emission standards of this part must meet the following requirements:

(a) *Crankcase emissions.* Crankcase emissions may not be discharged directly into the ambient atmosphere from any engine throughout its useful life, except as follows:

(1) Engines may discharge crankcase emissions to the ambient atmosphere if the emissions are added to the exhaust emissions (either physically or mathematically) during all emission testing. If you take advantage of this exception, you must do both of the following things:

(i) Manufacture the engines so that all crankcase emissions can be routed into the applicable sampling systems specified in 40 CFR part 1065.

(ii) Account for deterioration in crankcase emissions when determining exhaust deterioration factors.

(2) For purposes of this paragraph (a), crankcase emissions that are routed to the exhaust upstream of exhaust aftertreatment during all operation are not considered to be discharged directly into the ambient atmosphere.

(b) *Torque broadcasting.* Electronically controlled engines must broadcast their speed and output shaft torque (in newton-meters). Engines may alternatively broadcast a surrogate value for determining torque. Engines must broadcast engine parameters such that they can be read with a remote device, or broadcast them directly to their controller area networks. This information is necessary for testing engines in the field (see § 1042.515).

(c) *EPA access to broadcast information.* If we request it, you must provide us any hardware or tools we would need to readily read, interpret, and record all information broadcast by an engine's on-board computers and electronic control modules. If you broadcast a surrogate parameter for torque values, you must provide us what we need to convert these into torque units. We will not ask for hardware or tools if they are readily available commercially.

(d) *Adjustable parameters.* An operating parameter is not considered adjustable if you permanently seal it or if it is not normally accessible using ordinary tools. The following provisions apply for adjustable parameters:

(1) Category 1 engines that have adjustable parameters must meet all the requirements of this part for any adjustment in the physically adjustable range. We may require that you set adjustable parameters to any specification within the adjustable range during any testing, including certification testing, selective enforcement auditing, or in-use testing.

(2) Category 2 and Category 3 engines that have adjustable parameters must meet all the requirements of this part for any adjustment in the specified adjustable range. You must specify in your application for certification the adjustable range of each adjustable parameter on a new engine to—

(i) Ensure that safe engine operating characteristics are available within that range, as required by section 202(a)(4) of the Clean Air Act (42 U.S.C. 7521(a)(4)), taking into consideration the production tolerances.

(ii) Limit the physical range of adjustability to the maximum extent practicable to the range that is necessary for proper operation of the engine.

(e) *Prohibited controls.* You may not design your engines with emission-control devices, systems, or elements of design that cause or contribute to an unreasonable risk to public health, welfare, or safety while operating. For example, this would apply if the engine emits a noxious or toxic substance it would otherwise not emit, that contributes to such an unreasonable risk.

(f) *Defeat devices.* You may not equip your engines with a defeat device. A defeat device is an auxiliary emission control device that reduces the effectiveness of emission controls under conditions that the engine may reasonably be expected to encounter during normal operation and use. (Note that this means emission control for operation outside of and between the official test modes is generally expected to be similar to emission control demonstrated at the test modes.) This does not apply to auxiliary emission control devices you identify in your application for certification if any of the following is true:

(1) The conditions of concern were substantially included in the applicable duty-cycle test procedures described in subpart F of this part (the portion during which emissions are measured).

(2) You show your design is necessary to prevent engine (or vessel) damage or accidents.

(3) The reduced effectiveness applies only to starting the engine.

(4) The engine is a Category 3 engine and the AECD conforms to the requirements of paragraph (g) of this section. *See* § 1042.650 to determine if this allowance applies for a given Category 1 or Category 2 engine.

(g) *On-off controls for Category 3 engines.* Manufacturers may equip Category 3 engines with features that disable Tier 3 NO_X emission controls subject to the provisions of this paragraph (g). *See* § 1042.650 to determine if this allowance applies for a given Category 1 or Category 2 engine. Where this paragraph (g) applies for a Category 1 or Category 2 engine, read ''Tier 2'' to mean ''Tier 3'' and read ''Tier 3'' to mean ''Tier 4''.

(1) Features that disable Tier 3 emission controls are considered to be AECDs whether or not they meet the definition of an AECD. For example, manually operated on-off features are AECDs under this paragraph (g). The features must be identified in your application for certification as AECDs. For purposes of this paragraph (g), the term ''features that disable Tier 3 emission controls'' includes (but is not limited to) any combination of the following that cause the engine's emissions to exceed any Tier 3 emission standard:

(i) Bypassing of exhaust aftertreatment.

(ii) Reducing or eliminating flow of reductant to an SCR system.

(iii) Modulating engine calibration in a manner that increases engine-out emissions of a regulated pollutant.

(2) You must demonstrate that the AECD will not disable emission controls while operating in areas where emissions could reasonably be expected to adversely affect U.S. air quality. If an ECA has been established for U.S. waters, this means you must demonstrate that the AECD will not disable emission control while operating in waters within the ECA or any ECA associated area. (Note: *See* the regulations in 40 CFR part 1043 for requirements related to operation in ECAs, including foreign ECAs.) Compliance with this paragraph will generally require that the AECD operation be based on Global Positioning System (GPS) inputs. We may consider any relevant information to determine whether your AECD conforms to this paragraph (g).

(3) The onboard computer log must record in nonvolatile computer memory all incidents of engine operation with the Tier 3 emission controls disabled.

(4) The engine must comply fully with the Tier 2 standards when the Tier 3 emission controls are disabled.

[73 37243, June 30, 2008, as amended at 73 FR 59193, Oct. 8, 2008; 75 FR 22998, Apr. 30, 2010]

§ 1042.120 Emission-related warranty requirements.

(a) *General requirements.* You must warrant to the ultimate purchaser and each subsequent purchaser that the new engine, including all parts of its emission control system, meets two conditions:

(1) It is designed, built, and equipped so it conforms at the time of sale to the ultimate purchaser with the requirements of this part.

(2) It is free from defects in materials and workmanship that may keep it from meeting these requirements.

(b) *Warranty period.* Your emission-related warranty must be valid for at least as long as the minimum warranty periods listed in this paragraph (b) in hours of operation and years, whichever comes first. You may offer an emission-related warranty more generous than we require. The emission-related warranty for the engine may not be shorter than any published warranty you offer without charge for the engine. Similarly, the emission-related warranty for any component may not be shorter than any published warranty you offer without charge for that component. If an engine has no hour meter, we base the warranty periods in this paragraph (b) only on the engine's age (in years).

The warranty period begins when the engine is placed into service. The following minimum warranty periods apply:

(1) For Category 1 and Category 2 engines, your emission-related warranty must be valid for at least 50 percent of the engine's useful life in hours of operation or a number of years equal to at least 50 percent of the useful life in years, whichever comes first.

(2) For Category 3 engines, your emission-related warranty must be valid throughout the engine's full useful life as specified in § 1042.104(d).

(c) *Components covered.* The emission-related warranty covers all components whose failure would increase an engine's emissions of any regulated pollutant, including components listed in 40 CFR part 1068, Appendix I, and components from any other system you develop to control emissions. The emission-related warranty for freshly manufactured marine engines covers these components even if another company produces the component. Your emission-related warranty does not need to cover components whose failure would not increase an engine's emissions of any regulated pollutant. For remanufactured engines, your emission-related warranty is required to cover only those parts that you supply or those parts for which you specify allowable part manufacturers. It does not need to cover used parts that are not replaced during the remanufacture.

(d) *Limited applicability.* You may deny warranty claims under this section if the operator caused the problem through improper maintenance or use, as described in 40 CFR 1068.115.

(e) *Owners manual.* Describe in the owners manual the emission-related warranty provisions from this section that apply to the engine.

[73 FR 37243, June 30, 2008, as amended at 75 FR 22999, Apr. 30, 2010]

§ 1042.125 Maintenance instructions.

Give the ultimate purchaser of each new engine written instructions for properly maintaining and using the engine, including the emission control system, as described in this section. The maintenance instructions also apply to service accumulation on your emission-data engines as described in § 1042.245 and in 40 CFR part 1065. The restrictions specified in paragraphs (a) through (e) of this section related to allowable maintenance apply only to Category 1 and Category 2 engines. Manufacturers may specify any maintenance for Category 3 engines.

(a) *Critical emission-related maintenance.* Critical emission-related maintenance includes any adjustment, cleaning, repair, or replacement of critical emission-related components. This may also include additional emission-related maintenance that you determine is critical if we approve it in advance. You may schedule critical emission-related maintenance on these components if you meet the following conditions:

(1) You demonstrate that the maintenance is reasonably likely to be done at the recommended intervals on in-use engines. We will accept scheduled maintenance as reasonably likely to occur if you satisfy any of the following conditions:

(i) You present data showing that any lack of maintenance that increases emissions also unacceptably degrades the engine's performance.

(ii) You present survey data showing that at least 80 percent of engines in the field get the maintenance you specify at the recommended intervals.

(iii) You provide the maintenance free of charge and clearly say so in your maintenance instructions.

(iv) You otherwise show us that the maintenance is reasonably likely to be done at the recommended intervals.

(2) For engines below 130 kW, you may not schedule critical emission-related maintenance more frequently than the following minimum intervals, except as specified in paragraphs (a)(4), (b), and (c) of this section:

(i) For EGR-related filters and coolers, PCV valves, and fuel injector tips (cleaning only), the minimum interval is 1,500 hours.

(ii) For the following components, including associated sensors and actuators, the minimum interval is 3,000 hours: Fuel injectors, turbochargers, catalytic converters, electronic control units, particulate traps, trap oxidizers, components related to particulate traps and trap oxidizers, EGR systems (including related components, but excluding filters and coolers), and other add-on components. For particulate traps, trap oxidizers, and components related to either of these, maintenance is limited to cleaning and repair only.

(3) For Category 1 and Category 2 engines at or above 130 kW, you may not schedule critical emission-related maintenance more frequently than the following minimum intervals, except as specified in paragraphs (a)(4), (b), and (c) of this section:

(i) For EGR-related filters and coolers, PCV valves, and fuel injector tips

(cleaning only), the minimum interval is 1,500 hours.

(ii) For the following components, including associated sensors and actuators, the minimum interval is 4500 hours: Fuel injectors, turbochargers, catalytic converters, electronic control units, particulate traps, trap oxidizers, components related to particulate traps and trap oxidizers, EGR systems (including related components, but excluding filters and coolers), and other add-on components. For particulate traps, trap oxidizers, and components related to either of these, maintenance is limited to cleaning and repair only.

(4) We may approve shorter maintenance intervals than those listed in paragraph (a)(3) of this section where technologically necessary.

(5) If your engine family has an alternate useful life under § 1042.101(e) that is shorter than the period specified in paragraph (a)(2) or (a)(3) of this section, you may not schedule critical emission-related maintenance more frequently than the alternate useful life, except as specified in paragraph (c) of this section.

(b) *Recommended additional maintenance.* You may recommend any additional amount of maintenance on the components listed in paragraph (a) of this section, as long as you state clearly that these maintenance steps are not necessary to keep the emission-related warranty valid. If operators do the maintenance specified in paragraph (a) of this section, but not the recommended additional maintenance, this does not allow you to disqualify those engines from in-use testing or deny a warranty claim. Do not take these maintenance steps during service accumulation on your emission-data engines.

(c) *Special maintenance.* You may specify more frequent maintenance to address problems related to special situations, such as atypical engine operation. You must clearly state that this additional maintenance is associated with the special situation you are addressing.

(d) *Noncritical emission-related maintenance.* Subject to the provisions of this paragraph (d), you may schedule any amount of emission-related inspection or maintenance that is not covered by paragraph (a) of this section (that is, maintenance that is neither explicitly identified as critical emission-related maintenance, nor that we approve as critical emission-related maintenance). Noncritical emission-related maintenance generally includes maintenance on the components we specify in 40 CFR part 1068, Appendix I that is not covered in paragraph (a) of this section. You must state in the owners manual that these steps are not necessary to keep the emission-related warranty valid. If operators fail to do this maintenance, this does not allow you to disqualify those engines from in-use testing or deny a warranty claim. Do not take these inspection or maintenance steps during service accumulation on your emission-data engines.

(e) *Maintenance that is not emission-related.* For maintenance unrelated to emission controls, you may schedule any amount of inspection or maintenance. You may also take these inspection or maintenance steps during service accumulation on your emission-data engines, as long as they are reasonable and technologically necessary. This might include adding engine oil, changing air, fuel, or oil filters, servicing engine-cooling systems, and adjusting idle speed, governor, engine bolt torque, valve lash, or injector lash. You may perform this nonemission-related maintenance on emission-data engines at the least frequent intervals that you recommend to the ultimate purchaser (but not intervals recommended for severe service).

(f) *Source of parts and repairs.* State clearly on the first page of your written maintenance instructions that a repair shop or person of the owner's choosing may maintain, replace, or repair emission control devices and systems. Your instructions may not require components or service identified by brand, trade, or corporate name. Also, do not directly or indirectly condition your warranty on a requirement that the engine be serviced by your franchised dealers or any other service establishments with which you have a commercial relationship. You may disregard the requirements in this paragraph (f) if you do one of two things:

(1) Provide a component or service without charge under the purchase agreement.

(2) Get us to waive this prohibition in the public's interest by convincing us the engine will work properly only with the identified component or service.

(g) *Payment for scheduled maintenance.* Owners are responsible for properly maintaining their engines. This generally includes paying for scheduled maintenance. However, manufacturers must pay for scheduled maintenance during the useful life if it meets all the following criteria:

(1) Each affected component was not in general use on similar engines before the applicable dates shown in paragraph (6) of the definition of ''new marine engine'' in § 1042.901.

(2) The primary function of each affected component is to reduce emissions.

(3) The cost of the scheduled maintenance is more than 2 percent of the price of the engine.

(4) Failure to perform the maintenance would not cause clear problems that would significantly degrade the engine's performance.

(h) *Owners manual.* Explain the owner's responsibility for proper maintenance in the owners manual.

[73 37243, June 30, 2008, as amended at 75 FR 22999, Apr. 30, 2010]

§ 1042.130 Installation instructions for vessel manufacturers.

(a) If you sell an engine for someone else to install in a vessel, give the engine installer instructions for installing it consistent with the requirements of this part. Include all information necessary to ensure that an engine will be installed in its certified configuration.

(b) Make sure these instructions have the following information:

(1) Include the heading: ''Emission-related installation instructions''.

(2) State: ''Failing to follow these instructions when installing a certified engine in a vessel violates federal law (40 CFR 1068.105(b)), subject to fines or other penalties as described in the Clean Air Act.''.

(3) Describe the instructions needed to properly install the exhaust system and any other components. Include instructions consistent with the requirements of § 1042.205(u).

(4) Describe any necessary steps for installing the diagnostic system described in § 1042.110.

(5) Describe any limits on the range of applications needed to ensure that the engine operates consistently with your application for certification. For example, if your engines are certified only for constant-speed operation, tell vessel manufacturers not to install the engines in variable-speed applications or modify the governor.

(6) Describe any other instructions to make sure the installed engine will operate according to design specifications in your application for certification. This may include, for example, instructions for installing aftertreatment devices when installing the engines.

(7) State: ''If you install the engine in a way that makes the engine's emission control information label hard to read during normal engine maintenance, you must place a duplicate label on the vessel, as described in 40 CFR 1068.105.''.

(8) Describe any vessel labeling requirements specified in § 1042.135.

(c) You do not need installation instructions for engines you install in your own vessels.

(d) Provide instructions in writing or in an equivalent format. For example, you may post instructions on a publicly available Web site for downloading or printing. If you do not provide the instructions in writing, explain in your application for certification how you will ensure that each installer is informed of the installation requirements.

§ 1042.135 Labeling.

(a) Assign each engine a unique identification number and permanently affix, engrave, or stamp it on the engine in a legible way.

(b) At the time of manufacture, affix a permanent and legible label identifying each engine. The label must be—

(1) Attached in one piece so it is not removable without being destroyed or defaced.

(2) Secured to a part of the engine needed for normal operation and not normally requiring replacement.

(3) Durable and readable for the engine's entire life.

(4) Written in English.

(c) The label must—

(1) Include the heading ''EMISSION CONTROL INFORMATION''.

(2) Include your full corporate name and trademark. You may identify another company and use its trademark instead of yours if you comply with the provisions of § 1042.640.

(3) Include EPA's standardized designation for the engine family (and subfamily, where applicable).

(4) Identify all the emission standards that apply to the engine (or FELs, if applicable). If you do not declare an FEL under subpart H of this part, you may alternatively state the engine's category, displacement (in liters or L/cyl), maximum engine power (in kW), and power density (in kW/L) as needed to determine the emission standards for the engine family. You may specify displacement, maximum engine power, or power density as a range consistent with the ranges listed in § 1042.101. See § 1042.140 for descriptions of how to specify per-cylinder displacement, maximum engine power, and power density.

(5) State the date of manufacture [DAY (optional), MONTH, and YEAR]; however, you may omit this from the label if you stamp, engrave, or otherwise permanently identify it elsewhere on the engine, in which case you must also describe in your application for certification where you will identify the date on the engine.

(6) Identify the application(s) for which the engine family is certified (such as constant-speed auxiliary, variable-speed propulsion engines used with fixed-pitch propellers, etc.). If the engine is certified as a recreational engine, state: ''INSTALLING THIS RECREATIONAL ENGINE IN A COMMERCIAL VESSEL OR USING THE VESSEL FOR COMMERCIAL PURPOSES MAY VIOLATE FEDERAL LAW SUBJECT TO CIVIL PENALTY (40 CFR 1042.601).''.

(7) For engines requiring ULSD, state: ''ULTRA LOW SULFUR DIESEL FUEL ONLY''.

(8) State the useful life for your engine family if the applicable useful life is based on the provisions of § 1042.101(e)(2) or (3), or § 1042.104(d)(2).

(9) Identify the emission control system. Use terms and abbreviations as described in 40 CFR 1068.45. You may omit this information from the label if there is not enough room for it and you put it in the owners manual instead.

(10) State: ''THIS MARINE ENGINE COMPLIES WITH U.S. EPA REGULATIONS FOR [MODEL YEAR].''.

(11) For a Category 1 or Category 2 engine that can be modified to operate on residual fuel, but has not been certified to meet the standards on such a fuel, include the statement: ''THIS ENGINE IS CERTIFIED FOR OPERATION ONLY WITH DIESEL FUEL. MODIFYING THE ENGINE TO OPERATE ON RESIDUAL OR INTERMEDIATE FUEL MAY BE A VIOLATION OF FEDERAL LAW SUBJECT TO CIVIL PENALTIES.''

(12) For an engine equipped with on-off emissions controls as allowed by § 1042.115, include the statement: ''THIS ENGINE IS CERTIFIED WITH ON-OFF EMISSION CONTROLS. OPERATION OF THE ENGINE CONTRARY TO 40 CFR 1042.115(g) IS A VIOLATION OF FEDERAL LAW SUBJECT TO CIVIL PENALTIES.''

(13) For engines intended for installation on domestic or public vessels, include the following statement: ''THIS ENGINE DOES NOT COMPLY WITH INTERNATIONAL MARINE REGULATIONS FOR COMMERCIAL VESSELS UNLESS IT IS ALSO COVERED BY AN EIAPP CERTIFICATE.''

(d) You may add information to the emission control information label as follows:

(1) You may identify other emission standards that the engine meets or does not meet (such as international standards). You may include this information by adding it to the statement we specify or by including a separate statement.

(2) You may add other information to ensure that the engine will be properly maintained and used.

(3) You may add appropriate features to prevent counterfeit labels. For example, you may include the engine's unique identification number on the label.

(e) For engines requiring ULSD, create a separate label with the statement: ''ULTRA LOW SULFUR DIESEL FUEL ONLY''. Permanently attach this label to the vessel near the fuel inlet or, if you do not manufacture the vessel, take one of the following steps to ensure that the vessel will be properly labeled:

(1) Provide the label to each vessel manufacturer and include in the emission-related installation instructions the requirement to place this label near the fuel inlet.

(2) Confirm that the vessel manufacturers install their own complying labels.

(f) You may ask us to approve modified labeling requirements in this part 1042 if you show that it is necessary or appropriate. We will approve your request if your alternate label is consistent with the intent of the labeling requirements of this part.

(g) If you obscure the engine label while installing the engine in the vessel such that the label will be hard to read during normal maintenance, you must place a duplicate label on the vessel. If others install your engine in their vessels in a way that obscures the engine label, we require them to add a duplicate label on the vessel (see 40 CFR 1068.105); in that case, give them the number of duplicate labels they request and keep the following records for at least five years:

(1) Written documentation of the request from the vessel manufacturer.

(2) The number of duplicate labels you send for each family and the date you sent them.

[73 37243, June 30, 2008, as amended at 75 FR 22999, Apr. 30, 2010]

§ 1042.140 Maximum engine power, displacement, power density, and maximum in-use engine speed.

This section describes how to determine the maximum engine power, displacement, and power density of an engine for the purposes of this part. Note that maximum engine power may differ from the definition of ''maximum test power'' in § 1042.901. This section also specifies how to determine maximum in-use engine speed for Category 3 engines.

(a) An engine configuration's maximum engine power is the maximum brake power point on the nominal power curve for the engine configuration, as defined in this section. Round the power value to the nearest whole kilowatt.

(b) The nominal power curve of an engine configuration is the relationship between maximum available engine brake power and engine speed for an engine, using the mapping procedures of 40 CFR part 1065, based on the manufacturer's design and production specifications for the engine. This information may also be expressed by a torque curve that relates maximum available engine torque with engine speed.

(c) An engine configuration's per-cylinder displacement is the intended swept volume of each cylinder. The swept volume of the engine is the product of the internal cross-section area of the cylinders, the stroke length, and the number of cylinders. Calculate the engine's intended swept volume from the design specifications for the cylinders using enough significant figures to allow determination of the displacement to the nearest 0.02 liters. Determine the final value by truncating digits to establish the per-cylinder displacement to the nearest 0.1 liters. For example, for an engine with circular cylinders having an internal diameter of 13.0 cm and a 15.5 cm stroke length, the rounded displacement would be: $(13.0/2)^2 \times (\pi) \times (15.5) \div 1000 = 2.0$ liters.

(d) The nominal power curve and intended swept volume must be within the range of the actual power curves and swept volumes of production engines considering normal production variability. If after production begins, it is determined that either your nominal power curve or your intended swept volume does not represent production engines, we may require you to amend your application for certification under § 1042.225.

(e) Throughout this part, references to a specific power value for an engine are based on maximum engine power. For example, the group of engines with maximum engine power above 600 kW may be referred to as engines above 600 kW.

(f) Calculate an engine family's power density in kW/L by dividing the unrounded maximum engine power by the engine's unrounded per-cylinder displacement, then dividing by the number of cylinders. Round the calculated value to the nearest whole number.

(g) Calculate a maximum test speed for the nominal power curve as specified in 40 CFR 1065.610. This is the maximum in-use engine speed used for calculating the NO_X standard in § 1042.104 for Category 3 engines. Alternatively, you may use a lower value if engine speed will be limited in actual use to that lower value.

[73 37243, June 30, 2008, as amended at 75 FR 23000, Apr. 30, 2010]

§ 1042.145 Interim provisions.

(a) *General*. The provisions in this section apply instead of other provisions in this part. This section describes when these interim provisions expire. Only the provisions of paragraph (h) of this section apply for Category 3 engines.

(b) *Delayed standards*. Post-manufacturer marinizers that are small-volume engine manufacturers may delay compliance with the Tier 3 standards for engines below 600 kW as follows:

(1) You may delay compliance with the Tier 3 standards for one model year, as long as the engines meet all the requirements that apply to Tier 2 engines.

(2) You may delay compliance with the NTE standards for Tier 3 engines for three model years in addition to the one-year delay specified in paragraph (b)(1) of this section, as long as the engines meet all other Tier 3 requirements for the appropriate model year.

(c) *Part 1065 test procedures for Category 1 and Category 2 engines*. You must generally use the test procedures specified in subpart F of this part, including the applicable test procedures in 40 CFR part 1065. As specified in this paragraph (c), you may use a combination of the test procedures specified in this part and the test procedures specified for Tier 2 engines before January 1, 2015. After this date, you must use test procedures only as specified in subpart F of this part.

(1) You may determine maximum test speed for engines below 37 kW as specified in 40 CFR part 89 without request through the 2009 model year.

(2) Before January 1, 2015, you may ask to use some or all of the procedures specified in 40 CFR part 94 (or 40 CFR part 89 for engines below 37 kW) for engines certified under this part 1042. If you ask to rely on a combination of procedures under this paragraph (c)(2), we will approve your request only if you show us that it does not affect your ability to demonstrate compliance with the applicable emission standards. This generally requires that the combined procedures would result in emission measurements at least as high as those that would be measured using the procedures specified in this part. Alternatively, you may demonstrate that the combined effects of the different procedures is small relative to your compliance margin (the degree to which your emissions are below the applicable standards).

(d) [Reserved]

(e) *Delayed compliance with NTE standards*. Engines below 56 kW may delay complying with the NTE standards specified in § 1042.101(c) until the 2013 model year. Engines at or above 56 kW and below 75 kW may delay complying with the NTE standards specified in § 1042.101(c) until the 2012 model year.

(f) *In-use compliance limits*. The provisions of this paragraph (f) apply for the first three model years of the Tier 4 standards. For purposes of determining compliance based on testing other than certification or production-line testing, calculate the applicable in-use compliance limits by adjusting the applicable standards/FELs. The PM adjustment does not apply for engines with a PM standard or FEL above 0.04 g/kW-hr. The NO_X adjustment does not apply for engines with a NO_X FEL above 2.7 g/kW-hr. Add the applicable adjustments in one of the following tables to the otherwise applicable standards and NTE limits. You must specify during certification which add-ons, if any, will apply for your engines.

TABLE 1 TO § 1042.145—IN-USE ADJUSTMENTS FOR THE FIRST THREE MODEL YEARS OF THE TIER 4 STANDARDS

Fraction of useful life already used	In-use adjustments (g/kW-hr)	
	For Tier 4 NO_X standards	For Tier 4 PM standards
0 < hours ≤ 50% of useful life	0.9	0.02
50 < hours ≤ 75% of useful life	1.3	0.02
hours > 75% of useful life	1.7	0.02

TABLE 2 TO § 1042.145—OPTIONAL IN-USE ADJUSTMENTS FOR THE FIRST THREE MODEL YEARS OF THE TIER 4 STANDARDS

Fraction of useful life already used	In-use adjustments (g/kW-hr)	
	For model year 2017 and earlier Tier 4 NO_X standards	For model year 2017 and earlier Tier 4 PM standards
0 < hours ≤ 50% of useful life	0.3	0.05
50 < hours ≤ 75% of useful life	0.4	0.05
hours > 75% of useful life	0.5	0.05

(g) *Deficiencies for NTE standards*. You may ask us to accept as compliant an engine that does not fully meet specific requirements under the applicable NTE standards. Such deficiencies are intended to allow for minor deviations from the NTE standards under limited conditions. We expect your engines to have functioning emission control hardware that allows you to comply with the NTE standards.

(1) Request our approval for specific deficiencies in your application for certification, or before you submit your application. We will not approve deficiencies retroactively to cover engines already certified. In your request, identify the scope of each deficiency and describe any auxiliary emission control devices you will use to control emissions to the lowest practical level, considering the deficiency you are requesting.

(2) We will approve a deficiency only if compliance would be infeasible or unreasonable considering such factors as the technical feasibility of the given hardware and the applicable lead time and production cycles. We may consider other relevant factors.

(3) Our approval applies only for a single model year and may be limited to specific engine configurations. We may approve your request for the same deficiency in the following model year if correcting the deficiency would require unreasonable hardware or software modifications and we determine that you have demonstrated an acceptable level of effort toward complying.

(4) You may ask for any number of deficiencies in the first three model years during which NTE standards apply for your engines. For the next four model years, we may approve up to three deficiencies per engine family. Deficiencies of the same type that apply similarly to different power ratings within a family count as one deficiency per family. We may condition approval of any such additional deficiencies during these four years on any additional conditions we determine to be appropriate. We will not approve deficiencies after the seven-year period specified in this paragraph (g)(4), unless they are related to safety.

(h) The following interim provisions apply for Category 3 engines:

(1) *Applicability of Tier 3 standards to Category 3 engines operating in Alaska, Hawaii, and U.S. territories*. (i) Category 3 engines are not required to comply with the Tier 3 NO_X standard when operating in areas of Guam, American Samoa, the Commonwealth of the Northern Mariana Islands, Puerto Rico, or U.S. Virgin Islands. Category 3 engines are also not required to comply with the Tier 3 NO_X standards when operating in the waters of the smallest Hawaiian islands or in the waters of

Alaska west of Kodiak. For the purpose of this paragraph (h)(1), ''the smallest Hawaiian islands'' includes all Hawaiian islands other than Hawaii, Kahoolawe, Kauai, Lanai, Maui, Molokai, Niihau, and Oahu. Engines must comply fully with the appropriate Tier 2 NO_x standard and all other applicable requirements when operating in the areas identified in this paragraph (h)(1).

(ii) The provisions of paragraph (h)(1)(i) of this section do not apply to ships operating in an ECA or an ECA associated area. The Tier 3 standards apply in full for any area included in an ECA or an ECA associated area.

(2) *Part 1065 test procedures*. You must generally use the test procedures specified in subpart F of this part for Category 3 engines, including the applicable test procedures in 40 CFR part 1065. You may use a combination of the test procedures specified in this part and the test procedures specified in 40 CFR part 94 before January 1, 2016 without request. After this date, you must use test procedures only as specified in subpart F of this part.

(i) *Limitation of 40 CFR 1068.101 before July 1, 2010*. Notwithstanding other provisions of this part or 40 CFR part 94, for the period June 29, 2010 through July 1, 2010, it is not a violation of 40 CFR 1068.101 to operate in U.S. waters uncertified engines installed on vessels manufactured outside of the United States before June 29, 2010. Operation of such vessels in U.S. waters on or after July 1, 2010 is deemed to be introduction into U.S. commerce of a new marine engine.

[73 37243, June 30, 2008, as amended at 73 FR 59194, Oct. 8, 2008; 75 FR 23000, Apr. 30, 2010]

Subpart C—Certifying Engine Families

§ 1042.201 General requirements for obtaining a certificate of conformity.

(a) You must send us a separate application for a certificate of conformity for each engine family. A certificate of conformity is valid starting with the indicated effective date, but it is not valid for any production after December 31 of the model year for which it is issued. No certificate will be issued after December 31 of the model year.

(b) The application must contain all the information required by this part and must not include false or incomplete statements or information (see § 1042.255).

(c) We may ask you to include less information than we specify in this subpart, as long as you maintain all the information required by § 1042.250.

(d) You must use good engineering judgment for all decisions related to your application (see 40 CFR 1068.5).

(e) An authorized representative of your company must approve and sign the application.

(f) See § 1042.255 for provisions describing how we will process your application.

(g) We may require you to deliver your test engines to a facility we designate for our testing (see § 1042.235(c)).

(h) For engines that become new after being placed into service, such as engines installed on imported vessels, we may specify alternate certification provisions consistent with the intent of this part. *See* the definition of ''new marine engine'' in § 1042.901.

[73 37243, June 30, 2008, as amended at 75 FR 23000, Apr. 30, 2010]

§ 1042.205 Application requirements.

This section specifies the information that must be in your application, unless we ask you to include less information under § 1042.201(c). We may require you to provide additional information to evaluate your application.

(a) Describe the engine family's specifications and other basic parameters of the engine's design and emission controls. List the fuel type on which your engines are designed to operate (for example, ultra low-sulfur diesel fuel). List each distinguishable engine configuration in the engine family. For each engine configuration, list the maximum engine power and the range of values for maximum engine power resulting from production tolerances, as described in § 1042.140.

(b) Explain how the emission control system operates. Describe in detail all system components for controlling exhaust emissions, including all auxiliary emission control devices (AECDs) and

all fuel-system components you will install on any production or test engine. Identify the part number of each component you describe. For this paragraph (b), treat as separate AECDs any devices that modulate or activate differently from each other. Include all the following:

(1) Give a general overview of the engine, the emission control strategies, and all AECDs.

(2) Describe each AECD's general purpose and function.

(3) Identify the parameters that each AECD senses (including measuring, estimating, calculating, or empirically deriving the values). Include vessel-based parameters and state whether you simulate them during testing with the applicable procedures.

(4) Describe the purpose for sensing each parameter.

(5) Identify the location of each sensor the AECD uses.

(6) Identify the threshold values for the sensed parameters that activate the AECD.

(7) Describe the parameters that the AECD modulates (controls) in response to any sensed parameters, including the range of modulation for each parameter, the relationship between the sensed parameters and the controlled parameters and how the modulation achieves the AECD's stated purpose. Use graphs and tables, as necessary.

(8) Describe each AECD's specific calibration details. This may be in the form of data tables, graphical representations, or some other description.

(9) Describe the hierarchy among the AECDs when multiple AECDs sense or modulate the same parameter. Describe whether the strategies interact in a comparative or additive manner and identify which AECD takes precedence in responding, if applicable.

(10) Explain the extent to which the AECD is included in the applicable test procedures specified in subpart F of this part.

(11) Do the following additional things for AECDs designed to protect engines or vessels:

(i) Identify the engine and/or vessel design limits that make protection necessary and describe any damage that would occur without the AECD.

(ii) Describe how each sensed parameter relates to the protected components' design limits or those operating conditions that cause the need for protection.

(iii) Describe the relationship between the design limits/parameters being protected and the parameters sensed or calculated as surrogates for those design limits/parameters, if applicable.

(iv) Describe how the modulation by the AECD prevents engines and/or vessels from exceeding design limits.

(v) Explain why it is necessary to estimate any parameters instead of measuring them directly and describe how the AECD calculates the estimated value, if applicable.

(vi) Describe how you calibrate the AECD modulation to activate only during conditions related to the stated need to protect components and only as needed to sufficiently protect those components in a way that minimizes the emission impact.

(12) Include any other information required by this part with respect to AECDs. For example, *see* §1042.115 for requirements related to on-off technologies.

(c) If your engines are equipped with an engine diagnostic system, explain how it works, describing especially the engine conditions (with the corresponding diagnostic trouble codes) that cause the malfunction-indicator light to go on.

(d) Describe the engines you selected for testing and the reasons for selecting them.

(e) Describe the test equipment and procedures that you used, including the duty cycle(s) and the corresponding engine applications. Also describe any special or alternate test procedures you used.

(f) Describe how you operated the emission-data engine before testing, including the duty cycle and the number of engine operating hours used to stabilize emission levels. Explain why you selected the method of service accumulation. Describe any scheduled maintenance you did.

(g) List the specifications of the test fuel to show that it falls within the required ranges we specify in 40 CFR part 1065.

(h) Identify the engine family's useful life.

(i) Include the maintenance and warranty instructions you will give to the ultimate purchaser of each new engine (*see* §§ 1042.120 and 1042.125). Describe your plan for meeting warranty obligations under § 1042.120.

(j) Include the emission-related installation instructions you will provide if someone else installs your engines in a vessel (see § 1042.130).

(k) Describe your emission control information label (see § 1042.135).

(l) Identify the emission standards and/or FELs to which you are certifying engines in the engine family.

(m) Identify the engine family's deterioration factors and describe how you developed them (see § 1042.245). Present any emission test data you used for this.

(n) State that you operated your emission-data engines as described in the application (including the test procedures, test parameters, and test fuels) to show you meet the requirements of this part.

(o) Present emission data for HC, NO_X, PM, and CO on an emission-data engine to show your engines meet emission standards as specified in §§ 1042.101 or 1042.104. Note that you must submit PM data for all engines, whether or not a PM standard applies. Show emission figures before and after applying adjustment factors for regeneration and deterioration factors for each pollutant and for each engine. If we specify more than one grade of any fuel type (for example, high-sulfur and low-sulfur diesel fuel), you need to submit test data only for one grade, unless the regulations of this part specify otherwise for your engine. Include emission results for each mode for Category 3 engines or for other engines if you do discrete-mode testing under § 1042.505. Note that §§ 1042.235 and 1042.245 allows you to submit an application in certain cases without new emission data.

(p) For Category 1 and Category 2 engines, state that all the engines in the engine family comply with the applicable not-to-exceed emission standards in § 1042.101 for all normal operation and use when tested as specified in § 1042.515. Describe any relevant testing, engineering analysis, or other information in sufficient detail to support your statement.

(q) [Reserved]

(r) Report test results as follows:

(1) Report all test results involving measurement of pollutants for which emission standards apply. Include test results from invalid tests or from any other tests, whether or not they were conducted according to the test procedures of subpart F of this part. We may ask you to send other information to confirm that your tests were valid under the requirements of this part and 40 CFR part 1065.

(2) Report measured CO_2, N_2O, and CH_4 as described in § 1042.235. Small-volume engine manufacturers may omit reporting N_2O and CH_4.

(s) Describe all adjustable operating parameters (see § 1042.115(d)), including production tolerances. Include the following in your description of each parameter:

(1) The nominal or recommended setting.

(2) The intended physically adjustable range.

(3) The limits or stops used to establish adjustable ranges.

(4) For Category 1 engines, information showing why the limits, stops, or other means of inhibiting adjustment are effective in preventing adjustment of parameters on in-use engines to settings outside your intended physically adjustable ranges.

(5) For Category 2 and Category 3 engines, propose a range of adjustment for each adjustable parameter, as described in § 1042.115(d). Include information showing why the limits, stops, or other means of inhibiting adjustment are effective in preventing adjustment of parameters on in-use engines to settings outside your proposed adjustable ranges.

(t) Provide the information to read, record, and interpret all the information broadcast by an engine's onboard computers and electronic control units. State that, upon request, you will give us any hardware, software, or tools we would need to do this. If you broadcast a surrogate parameter for torque values, you must provide us what we need to convert these into torque units. You may reference any appropriate publicly

released standards that define conventions for these messages and parameters. Format your information consistent with publicly released standards.

(u) Confirm that your emission-related installation instructions specify how to ensure that sampling of exhaust emissions will be possible after engines are installed in vessels and placed in service. Show how to sample exhaust emissions in a way that prevents diluting the exhaust sample with ambient air.

(v) State whether your certification is limited for certain engines. If this is the case, describe how you will prevent use of these engines in applications for which they are not certified. This applies for engines such as the following:

(1) Constant-speed engines.

(2) Engines used with controllable-pitch propellers.

(3) Recreational engines.

(w) Unconditionally certify that all the engines in the engine family comply with the requirements of this part, other referenced parts of the CFR, and the Clean Air Act.

(x) Include good-faith estimates of U.S.-directed production volumes. Include a justification for the estimated production volumes if they are substantially different than actual production volumes in earlier years for similar models.

(y) Include the information required by other subparts of this part. For example, include the information required by § 1042.725 if you participate in the ABT program.

(z) Include other applicable information, such as information specified in this part or 40 CFR part 1068 related to requests for exemptions.

(aa) Name an agent for service located in the United States. Service on this agent constitutes service on you or any of your officers or employees for any action by EPA or otherwise by the United States related to the requirements of this part.

(bb) The following provisions apply for imported engines:

(1) Describe your normal practice for importing engines. For example, this may include identifying the names and addresses of any agents you have authorized to import your engines. Engines imported by nonauthorized agents are not covered by your certificate.

(2) For engines below 560 kW, identify a test facility in the United States where you can test your engines if we select them for testing under a selective enforcement audit, as specified in 40 CFR part 1068.

[73 37243, June 30, 2008, as amended at 74 FR 56509, Oct. 30, 2009; 75 FR 23000, Apr. 30, 2010]

§ 1042.210 Preliminary approval.

If you send us information before you finish the application, we will review it and make any appropriate determinations, especially for questions related to engine family definitions, auxiliary emission control devices, deterioration factors, useful life, testing for service accumulation, maintenance, and compliance with not-to-exceed standards. See § 1042.245 for specific provisions that apply for deterioration factors. Decisions made under this section are considered to be preliminary approval, subject to final review and approval. We will generally not reverse a decision where we have given you preliminary approval, unless we find new information supporting a different decision. If you request preliminary approval related to the upcoming model year or the model year after that, we will make best-efforts to make the appropriate determinations as soon as practicable. We will generally not provide preliminary approval related to a future model year more than two years ahead of time.

§ 1042.220 Amending maintenance instructions.

You may amend your emission-related maintenance instructions after you submit your application for certification as long as the amended instructions remain consistent with the provisions of § 1042.125. You must send the Designated Compliance Officer a written request to amend your application for certification for an engine family if you want to change the emission-related maintenance instructions in a way that could affect emissions. In your request, describe the proposed changes to the maintenance instructions. If operators follow the original maintenance instructions rather than

the newly specified maintenance, this does not allow you to disqualify those engines from in-use testing or deny a warranty claim.

(a) If you are decreasing or eliminating any specified maintenance, you may distribute the new maintenance instructions to your customers 30 days after we receive your request, unless we disapprove your request. This would generally include replacing one maintenance step with another. We may approve a shorter time or waive this requirement.

(b) If your requested change would not decrease the specified maintenance, you may distribute the new maintenance instructions anytime after you send your request. For example, this paragraph (b) would cover adding instructions to increase the frequency of filter changes for engines in severe-duty applications.

(c) You need not request approval if you are making only minor corrections (such as correcting typographical mistakes), clarifying your maintenance instructions, or changing instructions for maintenance unrelated to emission control. We may ask you to send us copies of maintenance instructions revised under this paragraph (c).

[75 FR 23001, Apr. 30, 2010]

§ 1042.225 Amending applications for certification.

Before we issue you a certificate of conformity, you may amend your application to include new or modified engine configurations, subject to the provisions of this section. After we have issued your certificate of conformity, you may send us an amended application requesting that we include new or modified engine configurations within the scope of the certificate, subject to the provisions of this section. You must amend your application if any changes occur with respect to any information that is included or should be included in your application.

(a) You must amend your application before you take any of the following actions:

(1) Add an engine configuration to an engine family. In this case, the engine configuration added must be consistent with other engine configurations in the engine family with respect to the criteria listed in § 1042.230.

(2) Change an engine configuration already included in an engine family in a way that may affect emissions, or change any of the components you described in your application for certification. This includes production and design changes that may affect emissions any time during the engine's lifetime.

(3) Modify an FEL for an engine family as described in paragraph (f) of this section.

(b) To amend your application for certification as specified in paragraph (a) of this section, send the relevant information to the Designated Compliance Officer.

(1) Describe in detail the addition or change in the engine model or configuration you intend to make.

(2) Include engineering evaluations or data showing that the amended engine family complies with all applicable requirements. You may do this by showing that the original emission-data engine is still appropriate for showing that the amended family complies with all applicable requirements.

(3) If the original emission-data engine for the engine family is not appropriate to show compliance for the new or modified engine configuration, include new test data showing that the new or modified engine configuration meets the requirements of this part.

(c) We may ask for more test data or engineering evaluations. You must give us these within 30 days after we request them.

(d) For engine families already covered by a certificate of conformity, we will determine whether the existing certificate of conformity covers your newly added or modified engine. You may ask for a hearing if we deny your request (see § 1042.920).

(e) For engine families already covered by a certificate of conformity, you may start producing the new or modified engine configuration anytime after you send us your amended application and before we make a decision under paragraph (d) of this section. However, if we determine that the affected engines do not meet applicable requirements, we will notify you to cease production of the engines and may require

you to recall the engines at no expense to the owner. Choosing to produce engines under this paragraph (e) is deemed to be consent to recall all engines that we determine do not meet applicable emission standards or other requirements and to remedy the nonconformity at no expense to the owner. If you do not provide information required under paragraph (c) of this section within 30 days after we request it, you must stop producing the new or modified engines.

(f) You may ask us to approve a change to your FEL in certain cases after the start of production. The changed FEL may not apply to engines you have already introduced into U.S. commerce, except as described in this paragraph (f). If we approve a changed FEL after the start of production, you must include the new FEL on the emission control information label for all engines produced after the change. You may ask us to approve a change to your FEL in the following cases:

(1) You may ask to raise your FEL for your engine family at any time. In your request, you must show that you will still be able to meet the emission standards as specified in subparts B and H of this part. If you amend your application by submitting new test data to include a newly added or modified engine, as described in paragraph (b)(3) of this section, use the appropriate FELs with corresponding production volumes to calculate emission credits for the model year, as described in subpart H of this part. In all other circumstances, you must use the higher FEL for the entire family to calculate emission credits under subpart H of this part.

(2) You may ask to lower the FEL for your engine family only if you have test data from production engines showing that emissions are below the proposed lower FEL. The lower FEL applies only to engines you produce after we approve the new FEL. Use the appropriate FELs with corresponding production volumes to calculate emission credits for the model year, as described in subpart H of this part.

[73 37243, June 30, 2008, as amended at 75 FR 23001, Apr. 30, 2010]

§ 1042.230 Engine families.

(a) For purposes of certification, divide your product line into families of engines that are expected to have similar emission characteristics throughout the useful life as described in this section. You may not group engines in different engine categories in the same family. Your engine family is limited to a single model year.

(b) For Category 1 engines, group engines in the same engine family if they are the same in all the following aspects:

(1) The combustion cycle and the fuel with which the engine is intended or designed to be operated.

(2) The cooling system (for example, raw-water vs. separate-circuit cooling).

(3) Method of air aspiration.

(4) Method of exhaust aftertreatment (for example, catalytic converter or particulate trap).

(5) Combustion chamber design.

(6) Nominal bore and stroke.

(7) Cylinder arrangement (such as inline vs. vee configurations). This applies for engines with aftertreatment devices only.

(8) Method of control for engine operation other than governing (*i.e.*, mechanical or electronic).

(9) Application (commercial or recreational).

(10) Numerical level of the emission standards that apply to the engine, except as allowed under paragraphs (f) and (g) of this section.

(c) For Category 2 engines, group engines in the same engine family if they are the same in all the following aspects:

(1) The combustion cycle (e.g., diesel cycle).

(2) The fuel with which the engine is intended or designed to be operated and the fuel system configuration.

(3) The cooling system (for example, air-cooled or water-cooled), and procedure(s) employed to maintain engine temperature within desired limits (thermostat, on-off radiator fans, radiator shutters, etc.).

(4) The method of air aspiration (turbocharged, supercharged, naturally aspirated, Roots blown).

(5) The turbocharger or supercharger general performance characteristics

(e.g., approximate boost pressure, approximate response time, approximate size relative to engine displacement).

(6) The type of air inlet cooler (air-to-air, air-to-liquid, approximate degree to which inlet air is cooled).

(7) The type of exhaust aftertreatment system (oxidation catalyst, particulate trap), and characteristics of the aftertreatment system (catalyst loading, converter size vs. engine size).

(8) The combustion chamber configuration and the surface-to-volume ratio of the combustion chamber when the piston is at top dead center position, using nominal combustion chamber dimensions.

(9) Nominal bore and stroke dimensions.

(10) The location of the piston rings on the piston.

(11) The intake manifold induction port size and configuration.

(12) The exhaust manifold port size and configuration.

(13) The location of the intake and exhaust valves (or ports).

(14) The size of the intake and exhaust valves (or ports).

(15) The approximate intake and exhaust event timing and duration (valve or port).

(16) The configuration of the fuel injectors and approximate injection pressure.

(17) The type of fuel injection system controls (i.e., mechanical or electronic).

(18) The overall injection timing characteristics, or as appropriate ignition timing characteristics (i.e., the deviation of the timing curves from the optimal fuel economy timing curve must be similar in degree).

(19) The type of smoke control system.

(d) For Category 3 engines, group engines into engine families based on the criteria specified in Section 4.3 of the NO_X Technical Code (incorporated by reference in §1042.910), except as allowed in paragraphs (e) and (f) of this section.

(e) You may subdivide a group of engines that is identical under paragraph (b) or (c) of this section into different engine families if you show the expected emission characteristics are different during the useful life. However, for the purpose of applying small-volume family provisions of this part, we will consider the otherwise applicable engine family criteria of this section.

(f) You may group engines that are not identical with respect to the things listed in paragraph (b), (c), or (d) of this section in the same engine family, as follows:

(1) In unusual circumstances, you may group such engines in the same engine family if you show that their emission characteristics during the useful life will be similar.

(2) If you are a small-volume engine manufacturer, you may group any Category 1 engines into a single engine family or you may group any Category 2 engines into a single engine family. This also applies if you are a post-manufacture marinizer modifying a base engine that has a valid certificate of conformity for any kind of nonroad or heavy-duty highway engine under this chapter.

(3) The provisions of this paragraph (f) do not exempt any engines from meeting the standards and requirements in subpart B of this part.

(g) If you combine engines that are subject to different emission standards into a single engine family under paragraph (f) of this section, you must certify the engine family to the more stringent set of standards for that model year. For Category 3 engine families that include a range of maximum in-use engine speeds, use the highest value of maximum in-use engine speed to establish the applicable NO_X emission standard.

[73 37243, June 30, 2008, as amended at 75 FR 23001, Apr. 30, 2010]

§1042.235 Emission testing related to certification.

This section describes the emission testing you must perform to show compliance with the emission standards in §1042.101(a) or §1042.104. *See* §1042.205(p) regarding emission testing related to the NTE standards. *See* §§1042.240 and 1042.245 and 40 CFR part 1065, subpart E, regarding service accumulation before emission testing. *See* §1042.655 for special testing provisions available for Category 3 engines subject to Tier 3 standards.

(a) Select an emission-data engine from each engine family for testing. For engines at or above 560 kW, you may use a development engine that is equivalent in design to the engine being certified. For Category 3 engines, you may use a single-cylinder version of the engine. Using good engineering judgment, select the engine configuration most likely to exceed an applicable emission standard over the useful life, considering all exhaust emission constituents and the range of installation options available to vessel manufacturers.

(b) Test your emission-data engines using the procedures and equipment specified in subpart F of this part.

(c) We may measure emissions from any of your emission-data engines or other engines from the engine family, as follows:

(1) We may decide to do the testing at your plant or any other facility. If we do this, you must deliver the engine to a test facility we designate. The engine you provide must include appropriate manifolds, aftertreatment devices, electronic control units, and other emission-related components not normally attached directly to the engine block. If we do the testing at your plant, you must schedule it as soon as possible and make available the instruments, personnel, and equipment we need.

(2) If we measure emissions from one of your engines, the results of that testing become the official emission results for the engine. Unless we later invalidate these data, we may decide not to consider your data in determining if your engine family meets applicable requirements.

(3) Before we test one of your engines, we may set its adjustable parameters to any point within the specified adjustable ranges (*see* § 1042.115(d)).

(4) Before we test one of your engines, we may calibrate it within normal production tolerances for anything we do not consider an adjustable parameter. For example, this would apply for an engine parameter that is subject to production variability because it is adjustable during production, but is not considered an adjustable parameter (as defined in § 1042.901) because it is permanently sealed.

(d) You may ask to use carryover emission data from a previous model year instead of doing new tests, but only if all the following are true:

(1) The engine family from the previous model year differs from the current engine family only with respect to model year or other characteristics unrelated to emissions. You may also ask to add a configuration subject to § 1042.225.

(2) The emission-data engine from the previous model year remains the appropriate emission-data engine under paragraph (b) of this section.

(3) The data show that the emission-data engine would meet all the requirements that apply to the engine family covered by the application for certification. For engines originally tested under the provisions of 40 CFR part 94, you may consider those test procedures to be equivalent to the procedures we specify in subpart F of this part.

(e) We may require you to test a second engine of the same or different configuration in addition to the engine tested under paragraph (b) of this section.

(f) If you use an alternate test procedure under 40 CFR 1065.10 and later testing shows that such testing does not produce results that are equivalent to the procedures specified in subpart F of this part, we may reject data you generated using the alternate procedure.

(g) Measure CO_2 with each low-hour certification test using the procedures specified in 40 CFR part 1065 starting in the 2011 model year. Also measure CH_4 from Category 1 and Category 2 engines with each low-hour certification test using the procedures specified in 40 CFR part 1065 starting in the 2012 model year. Measure N_2O from Category 1 and Category 2 engines with each low-hour certification test using the procedures specified in 40 CFR part 1065 for any engine family that depends on NOx aftertreatment to meet emission standards. Small-volume engine manufacturers may omit measurement of N_2O and CH_4. These measurements are not required for NTE testing. Use the same units and modal calculations as for your other results to report a

single weighted value for each constituent. Round the final values as follows:

(1) Round CO_2 to the nearest 1 g/kW-hr.

(2) Round N_2O to the nearest 0.001 g/kW-hr.

(3) Round CH_4 to the nearest 0.001 g/kW-hr.

[73 37243, June 30, 2008, as amended at 74 FR 56509, Oct. 30, 2009; 75 FR 23002, Apr. 30, 2010]

§ 1042.240 Demonstrating compliance with exhaust emission standards.

(a) For purposes of certification, your engine family is considered in compliance with the emission standards in § 1042.101(a) or § 1042.104 if all emission-data engines representing that family have test results showing official emission results and deteriorated emission levels at or below these standards. This also applies for all test points for emission-data engines within the family used to establish deterioration factors. *See* paragraph (f) of this section for provisions related to demonstrating compliance with non-duty-cycle standards, such as NTE standards. Note that your FELs are considered to be the applicable emission standards with which you must comply if you participate in the ABT program in subpart H of this part.

(b) Your engine family is deemed not to comply if any emission-data engine representing that family has test results showing an official emission result or a deteriorated emission level for any pollutant that is above an applicable emission standard. Similarly, your engine family is deemed not to comply if any emission-data engine representing that family has test results showing any emission level above the applicable not-to-exceed emission standard for any pollutant. This also applies for all test points for emission-data engines within the family used to establish deterioration factors.

(c) To compare emission levels from the emission-data engine with the applicable emission standards, apply deterioration factors to the measured emission levels for each pollutant. Section 1042.245 specifies how to test your Category 1 or Category 2 engine to develop deterioration factors that represent the deterioration expected in emissions over your engines' full useful life. *See* paragraph (e) of this section for determining deterioration factors for Category 3 engines. Your deterioration factors must take into account any available data from in-use testing with similar engines. Small-volume engine manufacturers and post-manufacture marinizers may use assigned deterioration factors that we establish. Apply deterioration factors as follows:

(1) *Additive deterioration factor for exhaust emissions.* Except as specified in paragraph (c)(2) of this section, use an additive deterioration factor for exhaust emissions. An additive deterioration factor is the difference between exhaust emissions at the end of the useful life and exhaust emissions at the low-hour test point. In these cases, adjust the official emission results for each tested engine at the selected test point by adding the factor to the measured emissions. If the deterioration factor is less than zero, use zero. Additive deterioration factors must be specified to one more decimal place than the applicable standard.

(2) *Multiplicative deterioration factor for exhaust emissions.* Use a multiplicative deterioration factor if good engineering judgment calls for the deterioration factor for a pollutant to be the ratio of exhaust emissions at the end of the useful life to exhaust emissions at the low-hour test point. For example, if you use aftertreatment technology that controls emissions of a pollutant proportionally to engine-out emissions, it is often appropriate to use a multiplicative deterioration factor. Adjust the official emission results for each tested engine at the selected test point by multiplying the measured emissions by the deterioration factor. If the deterioration factor is less than one, use one. A multiplicative deterioration factor may not be appropriate in cases where testing variability is significantly greater than engine-to-engine variability. Multiplicative deterioration factors must be specified to one more significant figure than the applicable standard.

(3) *Deterioration factor for crankcase emissions.* If your engine vents crankcase emissions to the exhaust or to the atmosphere, you must account for crankcase emission deterioration, using good engineering judgment. You

may use separate deterioration factors for crankcase emissions of each pollutant (either multiplicative or additive) or include the effects in combined deterioration factors that include exhaust and crankcase emissions together for each pollutant.

(d) Collect emission data using measurements to one more decimal place than the applicable standard. Apply the deterioration factor to the official emission result, as described in paragraph (c) of this section, then round the adjusted figure to the same number of decimal places as the emission standard. Compare the rounded emission levels to the emission standard for each emission-data engine. In the case of NO_X+HC standards, apply the deterioration factor to each pollutant and then add the results before rounding.

(e) For Category 3 engines, determine a deterioration factor based on an engineering analysis. The engineering analysis must describe how the measured emission levels from the emission-data engine show that engines comply with applicable emission standards throughout the useful life. Include this analysis in your application for certification and add a statement that all data, analyses, evaluations, and other information you used are available for our review upon request.

(f) For NTE standards and mode caps, use good engineering judgment to demonstrate compliance throughout the useful life. You may, but are not required to, apply the same deterioration factors used to show compliance with the applicable duty-cycle standards. We will deny your application for certification if we determine that your test data show that your engines would exceed one or more NTE standard or mode cap during their useful lives.

[73 37243, June 30, 2008, as amended at 75 FR 23002, Apr. 30, 2010]

§ 1042.245 Deterioration factors.

This section describes how to determine deterioration factors for Category 1 and Category 2 engines, either with an engineering analysis, with pre-existing test data, or with new emission measurements. Apply these deterioration factors to determine whether your engines will meet the duty-cycle emission standards throughout the useful life as described in § 1042.240. This section does not apply for Category 3 engines.

(a) You may ask us to approve deterioration factors for an engine family with established technology based on engineering analysis instead of testing. Engines certified to a NO_X+HC standard or FEL greater than the Tier 3 NO_X+HC standard are considered to rely on established technology for control of gaseous emissions, except that this does not include any engines that use exhaust-gas recirculation or aftertreatment. In most cases, technologies used to meet the Tier 1 and Tier 2 emission standards would qualify as established technology. We must approve your plan to establish a deterioration factor under this paragraph (a) before you submit your application for certification.

(b) You may ask us to approve deterioration factors for an engine family based on emission measurements from similar highway, stationary, or nonroad engines (including locomotive engines or other marine engines) if you have already given us these data for certifying the other engines in the same or earlier model years. Use good engineering judgment to decide whether the two engines are similar. We must approve your plan to establish a deterioration factor under this paragraph (b) before you submit your application for certification. We will approve your request if you show us that the emission measurements from other engines reasonably represent in-use deterioration for the engine family for which you have not yet determined deterioration factors.

(c) If you are unable to determine deterioration factors for an engine family under paragraph (a) or (b) of this section, first get us to approve a plan for determining deterioration factors based on service accumulation and related testing. We will respond to your proposed plan within 45 days of receiving your request. Your plan must involve measuring emissions from an emission-data engine at least three times, which are evenly spaced over the service-accumulation period unless we specify otherwise, such that the resulting measurements and calculations

will represent the deterioration expected from in-use engines over the full useful life. You may use extrapolation to determine deterioration factors once you have established a trend of changing emissions with age for each pollutant. You may use an engine installed in a vessel to accumulate service hours instead of running the engine only in the laboratory. You may perform maintenance on emission-data engines as described in § 1042.125 and 40 CFR part 1065, subpart E.

(d) Include the following information in your application for certification:

(1) If you determine your deterioration factors based on test data from a different engine family, explain why this is appropriate and include all the emission measurements on which you base the deterioration factor.

(2) If you determine your deterioration factors based on engineering analysis, explain why this is appropriate and include a statement that all data, analyses, evaluations, and other information you used are available for our review upon request.

(3) If you do testing to determine deterioration factors, describe the form and extent of service accumulation, including a rationale for selecting the service-accumulation period and the method you use to accumulate hours.

[73 37243, June 30, 2008, as amended at 75 FR 23003, Apr. 30, 2010]

§ 1042.250 Recordkeeping and reporting.

(a) Send the Designated Compliance Officer information related to your U.S.-directed production volumes as described in § 1042.345. In addition, within 45 days after the end of the model year, you must send us a report describing information about engines you produced during the model year as follows:

(1) State the total production volume for each engine family that is not subject to reporting under § 1042.345.

(2) State the total production volume for any engine family for which you produce engines after completing the reports required in § 1042.345.

(b) Organize and maintain the following records:

(1) A copy of all applications and any summary information you send us.

(2) Any of the information we specify in § 1042.205 that you were not required to include in your application.

(3) A detailed history of each emission-data engine. For each engine, describe all of the following:

(i) The emission-data engine's construction, including its origin and buildup, steps you took to ensure that it represents production engines, any components you built specially for it, and all the components you include in your application for certification.

(ii) How you accumulated engine operating hours (service accumulation), including the dates and the number of hours accumulated.

(iii) All maintenance, including modifications, parts changes, and other service, and the dates and reasons for the maintenance.

(iv) All your emission tests (valid and invalid), including documentation on routine and standard tests, as specified in part 40 CFR part 1065, and the date and purpose of each test.

(v) All tests to diagnose engine or emission control performance, giving the date and time of each and the reasons for the test.

(vi) Any other significant events.

(4) Production figures for each engine family divided by assembly plant.

(5) Keep a list of engine identification numbers for all the engines you produce under each certificate of conformity.

(c) Keep data from routine emission tests (such as test cell temperatures and relative humidity readings) for one year after we issue the associated certificate of conformity. Keep all other information specified in this section for eight years after we issue your certificate.

(d) Store these records in any format and on any media, as long as you can promptly send us organized, written records in English if we ask for them. You must keep these records readily available. We may review them at any time.

[73 37243, June 30, 2008, as amended at 75 FR 23003, Apr. 30, 2010]

§ 1042.255 EPA decisions.

(a) If we determine your application is complete and shows that the engine family meets all the requirements of

this part and the Clean Air Act, we will issue a certificate of conformity for your engine family for that model year. We may make the approval subject to additional conditions.

(b) We may deny your application for certification if we determine that your engine family fails to comply with emission standards or other requirements of this part or the Clean Air Act. We will base our decision on all available information. If we deny your application, we will explain why in writing.

(c) In addition, we may deny your application or suspend or revoke your certificate if you do any of the following:

(1) Refuse to comply with any testing or reporting requirements.

(2) Submit false or incomplete information (paragraph (e) of this section applies if this is fraudulent).

(3) Render inaccurate any test data.

(4) Deny us from completing authorized activities (see 40 CFR 1068.20). This includes a failure to provide reasonable assistance.

(5) Produce engines for importation into the United States at a location where local law prohibits us from carrying out authorized activities.

(6) Fail to supply requested information or amend your application to include all engines being produced.

(7) Take any action that otherwise circumvents the intent of the Clean Air Act or this part.

(d) We may void your certificate if you do not keep the records we require or do not give us information as required under this part or the Clean Air Act.

(e) We may void your certificate if we find that you intentionally submitted false or incomplete information.

(f) If we deny your application or suspend, revoke, or void your certificate, you may ask for a hearing (see § 1042.920).

[73 37243, June 30, 2008, as amended at 75 FR 23003, Apr. 30, 2010]

Subpart D—Testing Production-line Engines

§ 1042.301 General provisions.

(a) If you produce engines that are subject to the requirements of this part, you must test them as described in this subpart, except as follows:

(1) Small-volume engine manufacturers may omit testing under this subpart.

(2) We may exempt Category 1 engine families with a projected U.S.-directed production volume below 100 engines from routine testing under this subpart. Request this exemption in your application for certification and include your basis for projecting a production volume below 100 units. We will approve your request if we agree that you have made good-faith estimates of your production volumes. Your exemption is approved when we grant your certificate. You must promptly notify us if your actual production exceeds 100 units during the model year. If you exceed the production limit or if there is evidence of a nonconformity, we may require you to test production-line engines under this subpart, or under 40 CFR part 1068, subpart E, even if we have approved an exemption under this paragraph (a)(2).

(3) [Reserved]

(b) We may suspend or revoke your certificate of conformity for certain engine families if your production-line engines do not meet the requirements of this part or you do not fulfill your obligations under this subpart (see §§ 1042.325 and 1042.340).

(c) Other regulatory provisions authorize us to suspend, revoke, or void your certificate of conformity, or order recalls for engine families, without regard to whether they have passed these production-line testing requirements. The requirements of this subpart do not affect our ability to do selective enforcement audits, as described in 40 CFR part 1068. Individual engines in families that pass these production-line testing requirements must also conform to all applicable regulations of this part and 40 CFR part 1068.

(d) You may use alternate programs or measurement methods for testing production-line engines in the following circumstances:

(1) [Reserved]

(2) You may test your engines using the CumSum procedures specified in 40 CFR part 1045 or 1051 instead of the procedures specified in this subpart, except that the threshold for establishing

quarterly or annual test periods is based on U.S.-directed production volumes of 800 instead of 1600. This alternate program does not require prior approval.

(3) You may ask to use another alternate program or measurement method for testing production-line engines. In your request, you must show us that the alternate program gives equal assurance that your engines meet the requirements of this part. We may waive some or all of this subpart's requirements if we approve your alternate program.

(e) If you certify a Category 1 or Category 2 engine family with carryover emission data, as described in § 1042.235(d), and these equivalent engine families consistently pass the production-line testing requirements over the preceding two-year period, you may ask for a reduced testing rate for further production-line testing for that family. The minimum testing rate is one engine per engine family. If we reduce your testing rate, we may limit our approval to any number of model years. In determining whether to approve your request, we may consider the number of engines that have failed the emission tests.

(f) We may ask you to make a reasonable number of production-line engines available for a reasonable time so we can test or inspect them for compliance with the requirements of this part. For Category 3 engines, you are not required to deliver engines to us, but we may inspect and test your engines at any facility at which they are assembled or installed in vessels.

[73 37243, June 30, 2008, as amended at 75 FR 23003, Apr. 30, 2010]

§ 1042.302 Applicability of this subpart for Category 3 engines.

If you produce Tier 3 or later Category 3 engines that are certified under this part, you must test them as described in this subpart, except as specified in this section.

(a) You must test each engine at the sea trial of the vessel in which it is installed or within the first 300 hours of operation, whichever occurs first. Since you must test each engine, the provisions of §§ 1042.310 and 1042.315(b) do not apply for Category 3 engines. If we determine that an engine failure under this subpart is caused by defective components or design deficiencies, we may revoke or suspend your certificate for the engine family as described in § 1042.340. If we determine that an engine failure under this subpart is caused only by incorrect assembly, we may suspend your certificate for the engine family as described in § 1042.325. If the engine fails, you may continue operating only to complete the sea trial and return to port. It is a violation of 40 CFR 1068.101(b)(1) to operate the vessel further until you remedy the cause of failure. Each two-hour period of such operation constitutes a separate offense. A violation lasting less than two hours constitutes a single offense.

(b) You are only required to measure NO_X emissions. You do not need to measure HC, CO or PM emissions under this subpart.

(c) If you are unable to operate the engine at the test points for the specified duty cycle, you may approximate these points consistent with the specifications of section 6 of Appendix 8 to the NO_X Technical Code (incorporated by reference in § 1042.910) and show compliance with the alternate installed-engine standard of § 1042.104(g). You must obtain EPA approval of your test procedure prior to testing the engine. Include in your request a description of your basis for concluding that the engine cannot be tested at the actual test points of the specified duty cycle.

(d) You may measure NO_X emissions at additional test points for the purposes of the continuous NO_X monitoring requirements of § 1042.110(d). If you do, you must report these values along with your other test results. Describe in your application for certification how you plan to use these values for continuous NO_X monitoring.

(e) You may ask to measure emissions according to the Direct Measurement and Monitoring method specified in section 6.4 of the NO_X Technical Code (incorporated by reference in § 1042.910).

[75 FR 23003, Apr. 30, 2010]

§ 1042.305 Preparing and testing production-line engines.

This section describes how to prepare and test production-line engines. You must assemble the test engine in a way that represents the assembly procedures for other engines in the engine family. You must ask us to approve any deviations from your normal assembly procedures for other production engines in the engine family.

(a) *Test procedures.* Test your production-line engines using the applicable testing procedures in subpart F of this part to show you meet the duty-cycle emission standards in subpart B of this part. For Category 1 and Category 2 engines, the not-to-exceed standards apply for this testing of Category 1 and Category 2 engines, but you need not do additional testing to show that production-line engines meet the not-to-exceed standards. The mode cap standards apply for the testing of Category 3 engines.

(b) *Modifying a test engine.* Once an engine is selected for testing (see § 1042.310), you may adjust, repair, prepare, or modify it or check its emissions only if one of the following is true:

(1) You document the need for doing so in your procedures for assembling and inspecting all your production engines and make the action routine for all the engines in the engine family.

(2) This subpart otherwise specifically allows your action.

(3) We approve your action in advance.

(c) *Engine malfunction.* If an engine malfunction prevents further emission testing, ask us to approve your decision to either repair the engine or delete it from the test sequence.

(d) *Setting adjustable parameters.* Before any test, we may require you to adjust any adjustable parameter on a Category 1 engine to any setting within its physically adjustable range. We may adjust or require you to adjust any adjustable parameter on a Category 2 or Category 3 engine to any setting within its specified adjustable range.

(1) We may require you to adjust idle speed outside the physically adjustable range as needed, but only until the engine has stabilized emission levels (see paragraph (e) of this section). We may ask you for information needed to establish an alternate minimum idle speed.

(2) We may specify adjustments within the physically adjustable range or the specified adjustable range by considering their effect on emission levels. We may also consider how likely it is that someone will make such an adjustment with in-use engines.

(e) *Stabilizing emission levels.* You may stabilize emission levels (or establish a Green Engine Factor for Category 2 engines) before you test production-line engines, as follows:

(1) You may stabilize emission levels by operating the engine in a way that represents the way production engines will be used, using good engineering judgment, for no more than the greater of two periods:

(i) 300 hours.

(ii) The number of hours you operated your emission-data engine for certifying the engine family (see 40 CFR part 1065, subpart E, or the applicable regulations governing how you should prepare your test engine).

(2) For Category 2 or Category 3 engines, you may ask us to approve a Green Engine Factor for each regulated pollutant for each engine family. Use the Green Engine Factor to adjust measured emission levels to establish a stabilized low-hour emission level.

(f) *Damage during shipment.* If shipping an engine to a remote facility for production-line testing makes necessary an adjustment or repair, you must wait until after the initial emission test to do this work. We may waive this requirement if the test would be impossible or unsafe, or if it would permanently damage the engine. Report to us in your written report under § 1042.345 all adjustments or repairs you make on test engines before each test.

(g) *Retesting after invalid tests.* You may retest an engine if you determine an emission test is invalid under subpart F of this part. Explain in your written report reasons for invalidating any test and the emission results from all tests. If we determine that you improperly invalidated a test, we may require you to ask for our approval for

future testing before substituting results of the new tests for invalid ones.

[73 37243, June 30, 2008, as amended at 75 FR 23004, Apr. 30, 2010]

§ 1042.310 Engine selection for Category 1 and Category 2 engines.

(a) Determine minimum sample sizes as follows:

(1) For Category 1 engines, the minimum sample size is one engine or one percent of the projected U.S.-directed production volume for all your Category 1 engine families, whichever is greater.

(2) For Category 2 engines, the minimum sample size is one engine or one percent of the projected U.S.-directed production volume for all your Category 2 engine families, whichever is greater.

(b) Randomly select one engine from each engine family early in the model year. For further testing to reach the minimum sample size, randomly select a proportional sample from each engine family, with testing distributed evenly over the course of the model year, unless we specify a different schedule for your tests. For example, we may require you to disproportionately select engines from the early part of a model year for a new engine model that has not previously been subject to production-line testing.

(c) For each engine that fails to meet emission standards, test two engines from the same engine family from the next fifteen engines produced or within seven days, whichever is later. If an engine fails to meet emission standards for any pollutant, count it as a failing engine under this paragraph (c).

(d) Continue testing until one of the following things happens:

(1) You test the number of engines specified in paragraphs (a) and (c) of this section.

(2) The engine family does not comply according to § 1042.315 or you choose to declare that the engine family does not comply with the requirements of this subpart.

(3) You test 30 engines from the engine family.

(e) You may elect to test more randomly chosen engines than we require under this section.

§ 1042.315 Determining compliance.

This section describes the pass-fail criteria for the production-line testing requirements. We apply these criteria on an engine-family basis. See § 1042.320 for the requirements that apply to individual engines that fail a production-line test.

(a) Calculate your test results as follows:

(1) *Initial and final test results.* Calculate and round the test results for each engine. If you do several tests on an engine, calculate the initial results for each test, then add all the test results together and divide by the number of tests. Round this final calculated value for the final test results on that engine. Include the Green Engine Factor to determine low-hour emission results, if applicable.

(2) *Final deteriorated test results.* Apply the deterioration factor for the engine family to the final test results (*see* § 1042.240(c)).

(3) *Round deteriorated test results.* Round the results to the number of decimal places in the emission standard expressed to one more decimal place.

(b) For Category 1 and Category 2 engines, if a production-line engine fails to meet emission standards and you test two additional engines as described in § 1042.310, calculate the average emission level for each pollutant for the three engines. If the calculated average emission level for any pollutant exceeds the applicable emission standard, the engine family fails the production-line testing requirements of this subpart. Tell us within ten working days if this happens. You may request to amend the application for certification to raise the FEL of the engine family as described in § 1042.225(f).

[73 37243, June 30, 2008, as amended at 75 FR 23004, Apr. 30, 2010]

§ 1042.320 What happens if one of my production-line engines fails to meet emission standards?

(a) If you have a production-line engine with final deteriorated test results exceeding one or more emission standards (see § 1042.315(a)), the certificate of conformity is automatically suspended for that failing engine. You must take

the following actions before your certificate of conformity can cover that engine:

(1) Correct the problem and retest the engine to show it complies with all emission standards.

(2) Include the test results and describe the remedy for each engine in the written report required under § 1042.345.

(b) You may request to amend the application for certification to raise the FEL of the entire engine family at this point (see § 1042.225).

(c) For catalyst-equipped engines, you may ask us to allow you to exclude an initial failed test if all of the following are true:

(1) The catalyst was in a green condition when tested initially.

(2) The engine met all emission standards when retested after degreening the catalyst.

(3) No additional emission-related maintenance or repair was performed between the initial failed test and the subsequent passing test.

[73 37243, June 30, 2008, as amended at 75 FR 23004, Apr. 30, 2010]

§ 1042.325 What happens if an engine family fails the production-line testing requirements?

(a) We may suspend your certificate of conformity for an engine family if it fails under § 1042.315. The suspension may apply to all facilities producing engines from an engine family, even if you find noncompliant engines only at one facility.

(b) We will tell you in writing if we suspend your certificate in whole or in part. We will not suspend a certificate until at least 15 days after the engine family fails. The suspension is effective when you receive our notice.

(c) Up to 15 days after we suspend the certificate for an engine family, you may ask for a hearing (see § 1042.920). If we agree before a hearing occurs that we used erroneous information in deciding to suspend the certificate, we will reinstate the certificate.

(d) Section 1042.335 specifies steps you must take to remedy the cause of the engine family's production-line failure. All the engines you have produced since the end of the last test period are presumed noncompliant and should be addressed in your proposed remedy. We may require you to apply the remedy to engines produced earlier if we determine that the cause of the failure is likely to have affected the earlier engines.

(e) You may request to amend the application for certification to raise the FEL of the entire engine family before or after we suspend your certificate as described in § 1042.225(f). We will approve your request if the failure is not caused by a defect and it is clear that you used good engineering judgment in establishing the original FEL.

[73 37243, June 30, 2008, as amended at 75 FR 23004, Apr. 30, 2010]

§ 1042.330 Selling engines from an engine family with a suspended certificate of conformity.

You may sell engines that you produce after we suspend the engine family's certificate of conformity under § 1042.315 only if one of the following occurs:

(a) You test each engine you produce and show it complies with emission standards that apply.

(b) We conditionally reinstate the certificate for the engine family. We may do so if you agree to recall all the affected engines and remedy any noncompliance at no expense to the owner if later testing shows that the engine family still does not comply.

§ 1042.335 Reinstating suspended certificates.

(a) Send us a written report asking us to reinstate your suspended certificate. In your report, identify the reason for noncompliance, propose a remedy for the engine family, and commit to a date for carrying it out. In your proposed remedy include any quality control measures you propose to keep the problem from happening again.

(b) Give us data from production-line testing that shows the remedied engine family complies with all the emission standards that apply.

§ 1042.340 When may EPA revoke my certificate under this subpart and how may I sell these engines again?

(a) We may revoke your certificate for an engine family in the following cases:

(1) You do not meet the reporting requirements.

(2) Your engine family fails to comply with the requirements of this subpart and your proposed remedy to address a suspended certificate under § 1042.325 is inadequate to solve the problem or requires you to change the engine's design or emission control system.

(b) To sell engines from an engine family with a revoked certificate of conformity, you must modify the engine family and then show it complies with the requirements of this part.

(1) If we determine your proposed design change may not control emissions for the engine's full useful life, we will tell you within five working days after receiving your report. In this case we will decide whether production-line testing will be enough for us to evaluate the change or whether you need to do more testing.

(2) Unless we require more testing, you may show compliance by testing production-line engines as described in this subpart.

(3) We will issue a new or updated certificate of conformity when you have met these requirements.

§ 1042.345 Reporting.

(a) Within 45 days of the end of each quarter in which production-line testing occurs, send us a report with the following information:

(1) Describe any facility used to test production-line engines and state its location.

(2) State the total U.S.-directed production volume and number of tests for each engine family.

(3) Describe how you randomly selected engines.

(4) Describe each test engine, including the engine family's identification and the engine's model year, build date, model number, identification number, and number of hours of operation before testing. Also describe how you developed and applied the Green Engine Factor, if applicable.

(5) Identify how you accumulated hours of operation on the engines and describe the procedure and schedule you used.

(6) Provide the test number; the date, time and duration of testing; test procedure; all initial test results; final test results; and final deteriorated test results for all tests. Provide the emission results for all measured pollutants. Include information for both valid and invalid tests and the reason for any invalidation.

(7) Describe completely and justify any nonroutine adjustment, modification, repair, preparation, maintenance, or test for the test engine if you did not report it separately under this subpart. Include the results of any emission measurements, regardless of the procedure or type of engine.

(8) Report on each failed engine as described in § 1042.320.

(9) Identify when the model year ends for each engine family.

(b) We may ask you to add information to your written report so we can determine whether your new engines conform with the requirements of this subpart. We may also ask you to send less information.

(c) An authorized representative of your company must sign the following statement:

> We submit this report under sections 208 and 213 of the Clean Air Act. Our production-line testing conformed completely with the requirements of 40 CFR part 1042. We have not changed production processes or quality-control procedures for test engines in a way that might affect emission controls. All the information in this report is true and accurate to the best of my knowledge. I know of the penalties for violating the Clean Air Act and the regulations. (Authorized Company Representative)

(d) Send electronic reports of production-line testing to the Designated Compliance Officer using an approved information format. If you want to use a different format, send us a written request with justification for a waiver.

(e) We will send copies of your reports to anyone from the public who asks for them. See § 1042.915 for information on how we treat information you consider confidential.

[73 37243, June 30, 2008, as amended at 75 FR 23004, Apr. 30, 2010]

§ 1042.350 Recordkeeping.

(a) Organize and maintain your records as described in this section. We may review your records at any time.

(b) Keep paper or electronic records of your production-line testing for eight years after you complete all the testing required for an engine family in a model year.

(c) Keep a copy of the written reports described in § 1042.345.

(d) Keep the following additional records:

(1) A description of all test equipment for each test cell that you can use to test production-line engines.

(2) The names of supervisors involved in each test.

(3) The name of anyone who authorizes adjusting, repairing, preparing, or modifying a test engine and the names of all supervisors who oversee this work.

(4) If you shipped the engine for testing, the date you shipped it, the associated storage or port facility, and the date the engine arrived at the testing facility.

(5) Any records related to your production-line tests that are not in the written report.

(6) A brief description of any significant events during testing not otherwise described in the written report or in this section.

(7) Any information specified in § 1042.345 that you do not include in your written reports.

(e) If we ask, you must give us a more detailed description of projected or actual production figures for an engine family. We may ask you to divide your production figures by maximum engine power, displacement, fuel type, or assembly plant (if you produce engines at more than one plant).

(f) Keep records of the engine identification number for each engine you produce under each certificate of conformity. You may identify these numbers as a range. Give us these records within 30 days if we ask for them.

(g) We may ask you to keep or send other information necessary to implement this subpart.

[73 37243, June 30, 2008, as amended at 75 FR 23004, Apr. 30, 2010]

Subpart E—In-use Testing

§ 1042.401 General Provisions.

We may perform in-use testing of any engine subject to the standards of this part.

Subpart F—Test Procedures

§ 1042.501 How do I run a valid emission test?

(a) Use the equipment and procedures for compression-ignition engines in 40 CFR part 1065 to determine whether engines meet the duty-cycle emission standards in §§ 1042.101 or 1042.104. Measure the emissions of all regulated pollutants as specified in 40 CFR part 1065. Use the applicable duty cycles specified in § 1042.505.

(b) Section 1042.515 describes the supplemental test procedures for evaluating whether engines meet the not-to-exceed emission standards in § 1042.101(c).

(c) Use the fuels and lubricants specified in 40 CFR part 1065, subpart H, for all the testing we require in this part, except as specified in this section and § 1042.515.

(1) For service accumulation, use the test fuel or any commercially available fuel that is representative of the fuel that in-use engines will use.

(2) For diesel-fueled engines, use the appropriate diesel fuel specified in 40 CFR part 1065, subpart H, for emission testing. Unless we specify otherwise, the appropriate diesel test fuel for Category 1 and Category 2 engines is the ultra low-sulfur diesel fuel. If we allow you to use a test fuel with higher sulfur levels, identify the test fuel in your application for certification. Unless we specify otherwise, the appropriate diesel test fuel for Category 3 engines is the high-sulfur diesel fuel. For Category 2 and Category 3 engines, you may ask to use commercially available diesel fuel similar but not necessarily identical to the applicable fuel specified in 40 CFR part 1065, subpart H; we will approve your request if you show us that it does not affect your ability to demonstrate compliance with the applicable emission standards.

(3) For Category 1 and Category 2 engines that are expected to use a type of fuel (or mixed fuel) other than diesel

fuel (such as natural gas, methanol, or residual fuel), use a commercially available fuel of that type for emission testing. If a given engine is designed to operate on different fuels, we may (at our discretion) require testing on each fuel. Propose test fuel specifications that take into account the engine design and the properties of commercially available fuels. Describe these test fuel specifications in the application for certification.

(d) You may use special or alternate procedures to the extent we allow them under 40 CFR 1065.10.

(e) This subpart is addressed to you as a manufacturer, but it applies equally to anyone who does testing for you, and to us when we perform testing to determine if your engines meet emission standards.

(f) Duty-cycle testing is limited to ambient temperatures of 20 to 30 °C. Atmospheric pressure must be between 91.000 and 103.325 kPa, and must be within ±5 percent of the value recorded at the time of the last engine map. Testing may be performed with any ambient humidity level. Correct duty-cycle NO_X emissions for humidity as specified in 40 CFR part 1065.

(g) For Category 3 engines, instead of test data collected as specified in 40 CFR part 1065, you may submit test data for NO_X, HC, and CO emissions that were collected as specified in the NO_X Technical Code (incorporated by reference in § 1042.910). For example, this allowance includes the allowance to perform the testing using test fuels allowed under the NO_X Technical Code that do not meet the sulfur specifications of this section. We may require you to include a brief engineering analysis showing how these data demonstrate that your engines would meet the applicable emission standards if you had used the test procedures specified in 40 CFR part 1065.

[73 37243, June 30, 2008, as amended at 74 FR 56509, Oct. 30, 2009; 75 FR 23005, Apr. 30, 2010]

§ 1042.505 Testing engines using discrete-mode or ramped-modal duty cycles.

This section describes how to test engines under steady-state conditions. In some cases, we allow you to choose the appropriate steady-state duty cycle for an engine. In these cases, you must use the duty cycle you select in your application for certification for all testing you perform for that engine family. If we test your engines to confirm that they meet emission standards, we will use the duty cycles you select for your own testing. We may also perform other testing as allowed by the Clean Air Act.

(a) You may perform steady-state testing with either discrete-mode or ramped-modal cycles, as follows:

(1) For discrete-mode testing, sample emissions separately for each mode, then calculate an average emission level for the whole cycle using the weighting factors specified for each mode. Calculate cycle statistics and compare with the established criteria as specified in 40 CFR 1065.514 to confirm that the test is valid. Operate the engine and sampling system as follows:

(i) *Engines with NO_X aftertreatment.* For engines that depend on aftertreatment to meet the NO_X emission standard, operate the engine for 5–6 minutes, then sample emissions for 1–3 minutes in each mode. You may extend the sampling time to improve measurement accuracy of PM emissions, using good engineering judgment. If you have a longer sampling time for PM emissions, calculate and validate cycle statistics separately for the gaseous and PM sampling periods.

(ii) *Engines without NO_X aftertreatment.* For other engines, operate the engine for at least 5 minutes, then sample emissions for at least 1 minute in each mode.

(2) For ramped-modal testing, start sampling at the beginning of the first mode and continue sampling until the end of the last mode. Calculate emissions and cycle statistics the same as for transient testing as specified in 40 CFR part 1065, subpart G.

(b) Measure emissions by testing the engine on a dynamometer with one of the following duty cycles (as specified) to determine whether it meets the emission standards in §§ 1042.101 or 1042.104:

(1) *General cycle.* Use the 4-mode duty cycle or the corresponding ramped-modal cycle described in paragraph (a) of Appendix II of this part for commercial propulsion marine engines that are

used with (or intended to be used with) fixed-pitch propellers, propeller-law auxiliary engines, and any other engines for which the other duty cycles of this section do not apply. Use this duty cycle also for commercial variable-speed propulsion marine engines that are used with (or intended to be used with) controllable-pitch propellers or with electrically coupled propellers, unless these engines are not intended for sustained operation (e.g., for at least 30 minutes) at all four modes when installed in the vessel.

(2) *Recreational marine engines.* Except as specified in paragraph (b)(3) of this section, use the 5-mode duty cycle or the corresponding ramped-modal cycle described in paragraph (b) of Appendix II of this part for recreational marine engines with maximum engine power at or above 37 kW.

(3) *Controllable-pitch and electrically coupled propellers.* Use the 4-mode duty cycle or the corresponding ramped-modal cycle described in paragraph (c) of Appendix II of this part for constant-speed propulsion marine engines that are used with (or intended to be used with) controllable-pitch propellers or with electrically coupled propellers. Use this duty cycle also for variable-speed propulsion marine engines that are used with (or intended to be used with) controllable-pitch propellers or with electrically coupled propellers if the duty cycles in paragraph (b)(1) and (b)(2) of this section do not apply.

(4) *Constant-speed auxiliary engines.* Use the 5-mode duty cycle or the corresponding ramped-modal cycle described in 40 CFR part 1039, Appendix II, paragraph (a) for constant-speed auxiliary engines.

(5) *Variable-speed auxiliary engines.* (i) Use the duty cycle specified in paragraph (b)(1) of this section for propeller-law auxiliary engines.

(ii) Use the 6-mode duty cycle or the corresponding ramped-modal cycle described in 40 CFR part 1039, Appendix II, paragraph (b) for variable-speed auxiliary engines with maximum engine power below 19 kW that are not propeller-law engines.

(iii) Use the 8-mode duty cycle or the corresponding ramped-modal cycle described in 40 CFR part 1039, Appendix III, paragraph (c) for variable-speed auxiliary engines with maximum engine power at or above 19 kW that are not propeller-law engines.

(c) During idle mode, operate the engine at its warm idle speed as described in 40 CFR part 1065.

(d) For constant-speed engines whose design prevents full-load operation for extended periods, you may ask for approval under 40 CFR 1065.10(c) to replace full-load operation with the maximum load for which the engine is designed to operate for extended periods.

(e) See 40 CFR part 1065 for detailed specifications of tolerances and calculations.

[73 37243, June 30, 2008, as amended at 75 FR 23005, Apr. 30, 2010]

§ 1042.515 Test procedures related to not-to-exceed standards.

(a) This section describes the procedures to determine whether your engines meet the not-to-exceed emission standards in § 1042.101(c). These procedures may include any normal engine operation and ambient conditions that the engines may experience in use. Paragraphs (c) through (e) of this section define the limits of what we will consider normal engine operation and ambient conditions.

(b) Measure emissions with one of the following procedures:

(1) Remove the selected engines for testing in a laboratory. You may use an engine dynamometer to simulate normal operation, as described in this section. Use the equipment and procedures specified in 40 CFR part 1065 to conduct laboratory testing.

(2) Test the selected engines while they remain installed in a vessel. Use the equipment and procedures specified in 40 CFR part 1065 subpart J, to conduct field testing. Use fuel meeting the specifications of 40 CFR part 1065, subpart H, or a fuel typical of what you would expect the engine to use in service.

(c) Engine testing may occur under the following ranges of ambient conditions without correcting measured emission levels:

(1) Atmospheric pressure must be between 96.000 and 103.325 kPa, except that manufacturers may test at lower atmospheric pressures if their test facility is located at an altitude that

makes it impractical to stay within this range. This pressure range is intended to allow testing under most weather conditions at all altitudes up to 1,100 feet above sea level.

(2) Ambient air temperature must be between 13 and 35 °C (or between 13 °C and 30 °C for engines not drawing intake air directly from a space that could be heated by the engine).

(3) Ambient water temperature must be between 5 and 27 °C.

(4) Ambient humidity must be between 7.1 and 10.7 grams of moisture per kilogram of dry air.

(d) Engine testing may occur at any conditions expected during normal operation but that are outside the conditions described in paragraph (b) of this section, as long as measured values are corrected to be equivalent to the nearest end of the specified range, using good engineering judgment. Correct NO_X emissions for humidity as specified in 40 CFR part 1065, subpart G.

(e) The sampling period may not begin until the engine has reached stable operating temperatures. For example, this would include only engine operation after starting and after the engine thermostat starts modulating the engine's coolant temperature. The sampling period may not include engine starting.

(f) Apply the NTE standards specified in §1042.101(c) to an engine family based on the zones and subzones corresponding to specific duty cycles and engine types as defined in Appendix III of this part. For an engine family certified to multiple duty cycles, the broadest applicable NTE zone applies for that family at the time of certification. Whenever an engine family is certified to multiple duty cycles and a specific engine from that family is tested for NTE compliance in use, determine the applicable NTE zone for that engine according to its in-use application. An engine family's NTE zone may be modified as follows:

(1) You may ask us to approve a narrower NTE zone for an engine family at the time of certification, based on information such as how that engine family is expected to normally operate in use. For example, if an engine family is always coupled to a pump or jet drive, the engine might be able to operate only within a narrow range of engine speed and power.

(2) You may ask us to approve a Limited Testing Region (LTR). An LTR is a region of engine operation, within the applicable NTE zone, where you have demonstrated that your engine family operates for no more than 5.0 percent of its normal in-use operation, on a time-weighted basis. You must specify an LTR using boundaries based on engine speed and power (or torque), where the LTR boundaries must coincide with some portion of the boundary defining the overall NTE zone. Any emission data collected within an LTR for a time duration that exceeds 5.0 percent of the duration of its respective NTE sampling period (as defined in paragraph (c)(3) of this section) will be excluded when determining compliance with the applicable NTE standards. Any emission data collected within an LTR for a time duration of 5.0 percent or less of the duration of the respective NTE sampling period will be included when determining compliance with the NTE standards.

(3) You must notify us if you design your engines for normal in-use operation outside the applicable NTE zone. If we learn that normal in-use operation for your engines includes other speeds and loads, we may specify a broader NTE zone, as long as the modified zone is limited to normal in-use operation for speeds greater than 70 percent of maximum test speed and loads greater than 30 percent of maximum power at maximum test speed (or 30 percent of maximum test torque for constant-speed engines).

(4) You may exclude emission data based on ambient or engine parameter limit values as follows:

(i) *NO_X catalytic aftertreatment minimum temperature.* For an engine equipped with a catalytic NO_X aftertreatment system, exclude NO_X emission data that is collected when the exhaust temperature is less than 250 °C, as measured within 30 cm downstream of the last NO_X aftertreatment device. Where there are parallel paths, measure the temperature 30 cm downstream of the last NO_X aftertreatment device in the path with the greatest exhaust flow.

(ii) *Oxidizing aftertreatment minimum temperature.* For an engine equipped with an oxidizing catalytic aftertreatment system, exclude HC, CO, and PM emission data that is collected when the exhaust temperature is less than 250 °C, as measured within 30 cm downstream of the last oxidizing aftertreatment device. Where there are parallel paths, measure the temperature 30 cm downstream of the last oxidizing aftertreatment device in the path with the greatest exhaust flow.

(iii) *Other parameters.* You may request our approval for other minimum or maximum ambient or engine parameter limit values at the time of certification.

(g) For engines equipped with emission controls that include discrete regeneration events, if a regeneration event occurs during the NTE test, the averaging period must be at least as long as the time between the events multiplied by the number of full regeneration events within the sampling period. This requirement applies only for engines that send an electronic signal indicating the start of the regeneration event.

§ 1042.520 What testing must I perform to establish deterioration factors?

Sections 1042.240 and 1042.245 describe the required methods for testing to establish deterioration factors for an engine family.

§ 1042.525 How do I adjust emission levels to account for infrequently regenerating aftertreatment devices?

This section describes how to adjust emission results from engines using aftertreatment technology with infrequent regeneration events. See paragraph (e) of this section for how to adjust ramped-modal testing. See paragraph (f) of this section for how to adjust discrete-mode testing. For this section, ''regeneration'' means an intended event during which emission levels change while the system restores aftertreatment performance. For example, exhaust gas temperatures may increase temporarily to remove sulfur from adsorbers or to oxidize accumulated particulate matter in a trap. For this section, ''infrequent'' refers to regeneration events that are expected to occur on average less than once over the applicable transient duty cycle or ramped-modal cycle, or on average less than once per typical mode in a discrete-mode test.

(a) *Developing adjustment factors.* Develop an upward adjustment factor and a downward adjustment factor for each pollutant based on measured emission data and observed regeneration frequency. Adjustment factors should generally apply to an entire engine family, but you may develop separate adjustment factors for different engine configurations within an engine family. If you use adjustment factors for certification, you must identify the frequency factor, F, from paragraph (b) of this section in your application for certification and use the adjustment factors in all testing for that engine family. You may use carryover or carry-across data to establish adjustment factors for an engine family, as described in § 1042.235(d), consistent with good engineering judgment. All adjustment factors for regeneration are additive. Determine adjustment factors separately for different test segments. For example, determine separate adjustment factors for different modes of a discrete-mode steady-state test. You may use either of the following different approaches for engines that use aftertreatment with infrequent regeneration events:

(1) You may disregard this section if regeneration does not significantly affect emission levels for an engine family (or configuration) or if it is not practical to identify when regeneration occurs. If you do not use adjustment factors under this section, your engines must meet emission standards for all testing, without regard to regeneration.

(2) If your engines use aftertreatment technology with extremely infrequent regeneration and you are unable to apply the provisions of this section, you may ask us to approve an alternate methodology to account for regeneration events.

(b) *Calculating average adjustment factors.* Calculate the average adjustment factor (EF_A) based on the following equation:

$$EF_A = (F)(EF_H) + (1 - F)(EF_L)$$

Where:

F = The frequency of the regeneration event during normal in-use operation, expressed in terms of the fraction of equivalent tests during which the regeneration occurs. You may determine F from in-use operating data or running replicate tests. For example, if you observe that the regeneration occurs 125 times during 1,000 MW-hrs of operation, and your engine typically accumulates 1 MW-hr per test, F would be (125) ÷ (1,000) ÷ (1) = 0.125. No further adjustments, including weighting factors, may be applied to F.

EF_H = Measured emissions from a test segment in which the regeneration occurs.

EF_L = Measured emissions from a test segment in which the regeneration does not occur.

(c) *Applying adjustment factors.* Apply adjustment factors based on whether regeneration occurs during the test run. You must be able to identify regeneration in a way that is readily apparent during all testing.

(1) If regeneration does not occur during a test segment, add an upward adjustment factor to the measured emission rate. Determine the upward adjustment factor (UAF) using the following equation:

$$UAF = EF_A - EF_L$$

(2) If regeneration occurs or starts to occur during a test segment, subtract a downward adjustment factor from the measured emission rate. Determine the downward adjustment factor (DAF) using the following equation:

$$DAF = EF_H - EF_A$$

(d) *Sample calculation.* If EF_L is 0.10 g/kW-hr, EF_H is 0.50 g/kW-hr, and F is 0.1 (the regeneration occurs once for each ten tests), then:

EF_A = (0.1)(0.5 g/kW-hr) + (1.0 − 0.1)(0.1 g/kW-hr) = 0.14 g/kW-hr.

UAF = 0.14 g/kW-hr − 0.10 g/kW-hr = 0.04 g/kW-hr.

DAF = 0.50 g/kW-hr − 0.14 g/kW-hr = 0.36 g/kW-hr.

(e) *Ramped-modal testing.* Develop a single sets of adjustment factors for the entire test. If a regeneration has started but has not been completed when you reach the end of a test, use good engineering judgment to reduce your downward adjustments to be proportional to the emission impact that occurred in the test.

(f) *Discrete-mode testing.* Develop separate adjustment factors for each test mode. If a regeneration has started but has not been completed when you reach the end of the sampling time for a test mode extend the sampling period for that mode until the regeneration is completed.

(g) *Category 3 engines.* We may specify an alternate methodology to account for regeneration events from Category 3 engines. If we do not, the provisions of this section apply as specified.

[73 37243, June 30, 2008, as amended at 75 FR 23005, Apr. 30, 2010]

Subpart G—Special Compliance Provisions

§ 1042.601 General compliance provisions for marine engines and vessels.

Engine and vessel manufacturers, as well as owners, operators, and rebuilders of engines and vessels subject to the requirements of this part, and all other persons, must observe the provisions of this part, the requirements and prohibitions in 40 CFR part 1068, and the provisions of the Clean Air Act. The provisions of 40 CFR part 1068 apply for compression-ignition marine engines as specified in that part, subject to the following provisions:

(a) The following prohibitions apply with respect to recreational marine engines and recreational vessels:

(1) Installing a recreational marine engine in a vessel that is not a recreational vessel is a violation of 40 CFR 1068.101(a)(1).

(2) For a vessel with an engine that is certified and labeled as a recreational marine engine, using it in a manner inconsistent with its intended use as a recreational vessel violates 40 CFR 1068.101(a)(1), except as allowed by this chapter.

(b) Subpart I of this part describes how the prohibitions of 40 CFR 1068.101(a)(1) apply for certain remanufactured engines. The provisions of 40 CFR 1068.105 do not allow the installation of a new remanufactured engine in a vessel that is defined as a new vessel unless the remanufactured engine is subject to the same standards as the

standards applicable to freshly manufactured engines of the required model year.

(c) The provisions of 40 CFR 1068.120 apply when rebuilding marine engines, except as specified in subpart I of this part. The following additional requirements also apply when rebuilding marine engines equipped with exhaust aftertreatment:

(1) Follow all instructions from the engine manufacturer and aftertreatment manufacturer for checking, repairing, and replacing aftertreatment components. For example, you must replace the catalyst if the catalyst assembly is stamped with a build date more than ten years ago and the manufacturer's instructions state that catalysts over ten years old must be replaced when the engine is rebuilt.

(2) Measure pressure drop across the catalyst assembly to ensure that it is neither higher nor lower than the manufacturer's specifications and repair or replace exhaust-system components as needed to bring the pressure drop within the manufacturer's specifications.

(3) For engines equipped with exhaust sensors, verify that sensor outputs are within the manufacturer's recommended range and repair or replace any malfunctioning components (sensors, catalysts, or other components).

(d) The provisions of § 1042.635 for the national security exemption apply instead of 40 CFR 1068.225.

(e) For replacement engines, apply the provisions of 40 CFR 1068.240 as described in § 1042.615.

(f) For the purpose of meeting the defect-reporting requirements in 40 CFR 1068.501, if you manufacture other nonroad engines that are substantially similar to your marine engines, you may consider defects using combined marine and non-marine families.

(g) The selective enforcement audit provisions of 40 CFR part 1068 do not apply for Category 3 engines.

(h) The defect reporting requirements of 40 CFR 1068.501 apply for Category 3 engines, except the threshold for filing a defect report is two engines.

(i) You may not circumvent the requirements of this part or the Clean Air Act by manufacturing a vessel outside the United States or initially flagging a vessel in another country. The definition of ''new marine engine'' in § 1042.901 includes provisions for U.S.-flagged vessels that are manufactured or reflagged outside of U.S. waters. These provisions have the effect of applying the prohibitions of 40 CFR 1068.101(a)(1) to such vessels no later than when they first enter U.S. waters. The inclusion of these provisions does not affect requirements or prohibitions of the Clean Air Act or other statutes that may apply to the vessel before it first enters U.S. waters.

[73 37243, June 30, 2008, as amended at 73 FR 59194, Oct. 8, 2008; 75 FR 23005, Apr. 30, 2010]

§ 1042.605 Dressing engines already certified to other standards for nonroad or heavy-duty highway engines for marine use.

(a) *General provisions.* If you are an engine manufacturer (including someone who marinizes a land-based engine), this section allows you to introduce new marine engines into U.S. commerce if they are already certified to the requirements that apply to compression-ignition engines under 40 CFR parts 85 and 86 or 40 CFR part 89, 92, 1033, or 1039 for the appropriate model year. If you comply with all the provisions of this section, we consider the certificate issued under 40 CFR part 86, 89, 92, 1033, or 1039 for each engine to also be a valid certificate of conformity under this part 1042 for its model year, without a separate application for certification under the requirements of this part 1042. This section does not apply for Category 3 engines.

(b) *Vessel-manufacturer provisions.* If you are not an engine manufacturer, you may install an engine certified for the appropriate model year under 40 CFR part 86, 89, 92, 1033, or 1039 in a marine vessel as long as you do not make any of the changes described in paragraph (d)(3) of this section and you meet the requirements of paragraph (e) of this section. If you modify the nonmarine engine in any of the ways described in paragraph (d)(3) of this section, we will consider you a manufacturer of a new marine engine. Such engine modifications prevent you from using the provisions of this section.

(c) *Liability.* Engines for which you meet the requirements of this section

are exempt from all the requirements and prohibitions of this part, except for those specified in this section. Engines exempted under this section must meet all the applicable requirements from 40 CFR parts 85 and 86 or 40 CFR part 89, 92, 1033, or 1039. This paragraph (c) applies to engine manufacturers, vessel manufacturers that use such an engine, and all other persons as if the engine were used in its originally intended application. The prohibited acts of 40 CFR 1068.101(a)(1) apply to these new engines and vessels; however, we consider the certificate issued under 40 CFR part 86, 89, 92, 1033, or 1039 for each engine to also be a valid certificate of conformity under this part 1042 for its model year. If we make a determination that these engines do not conform to the regulations during their useful life, we may require you to recall them under 40 CFR part 85, 89, 92, or 1068.

(d) *Specific criteria and requirements*. If you are an engine manufacturer and meet all the following criteria and requirements regarding your new marine engine, the engine is eligible for an exemption under this section:

(1) You must produce it by marinizing an engine covered by a valid certificate of conformity from one of the following programs:

(i) Heavy-duty highway engines (40 CFR part 86).

(ii) Land-based compression-ignition nonroad engines (40 CFR part 89 or 1039).

(iii) Locomotives (40 CFR part 92 or 1033). To be eligible for dressing under this section, the engine must be from a locomotive certified to standards that are at least as stringent as either the standards applicable to new marine engines or freshly manufactured locomotives in the model year that the engine is being dressed.

(2) The engine must have the label required under 40 CFR part 86, 89, 92, 1033, or 1039.

(3) You must not make any changes to the certified engine that could reasonably be expected to increase its emissions. For example, if you make any of the following changes to one of these engines, you do not qualify for the engine dressing exemption:

(i) Change any fuel system parameters from the certified configuration, or change, remove, or fail to properly install any other component, element of design, or calibration specified in the engine manufacturer's application for certification. This includes aftertreatment devices and all related components.

(ii) Replacing an original turbocharger, except that small-volume engine manufacturers may replace an original turbocharger on a recreational engine with one that matches the performance of the original turbocharger.

(iii) Modify or design the marine engine cooling or aftercooling system so that temperatures or heat rejection rates are outside the original engine manufacturer's specified ranges.

(4) You must show that fewer than 10 percent of the engine family's total sales in the United States are used in marine applications. This includes engines used in any application, without regard to which company manufactures the vessel or equipment. Show this as follows:

(i) If you are the original manufacturer of the engine, base this showing on your sales information.

(ii) In all other cases, you must confirm this based on your best estimate of the original manufacturer's sales information.

(e) *Labeling and documentation*. If you are an engine manufacturer or vessel manufacturer using this exemption, you must do all of the following:

(1) Make sure the original engine label will remain clearly visible after installation in the vessel.

(2) Add a permanent supplemental label to the engine in a position where it will remain clearly visible after installation in the vessel. In your engine label, do the following:

(i) Include the heading: ''Marine Engine Emission Control Information''.

(ii) Include your full corporate name and trademark.

(iii) State: ''This engine was marinized without affecting its emission controls.''.

(iv) State the date you finished marinizing the engine (month and year).

(3) Send the Designated Compliance Officer a signed letter by the end of each calendar year (or less often if we

tell you) with all the following information:

(i) Identify your full corporate name, address, and telephone number.

(ii) List the engine models for which you expect to use this exemption in the coming year and describe your basis for meeting the sales restrictions of paragraph (d)(4) of this section.

(iii) State: ''We prepare each listed engine model for marine application without making any changes that could increase its certified emission levels, as described in 40 CFR 1042.605.''.

(f) *Failure to comply*. If your engines do not meet the criteria listed in paragraph (d) of this section, they will be subject to the standards, requirements, and prohibitions of this part 1042 and the certificate issued under 40 CFR part(s) 86, 89, 92, 1033, or 1039 will not be deemed to also be a certificate issued under this part 1042. Introducing these engines into U.S. commerce as marine engines without a valid exemption or certificate of conformity under this part violates the prohibitions in 40 CFR 1068.101(a)(1).

(g) *Data submission*. (1) If you are both the original manufacturer and marinizer of an exempted engine, you must send us emission test data on the appropriate marine duty cycles. You can include the data in your application for certification or in the letter described in paragraph (e)(3) of this section.

(2) If you are the original manufacturer of an exempted engine that is marinized by a post-manufacture marinizer, you may be required to send us emission test data on the appropriate marine duty cycles. If such data are requested you will be allowed a reasonable amount of time to collect the data.

(h) *Participation in averaging, banking and trading*. Engines adapted for marine use under this section may not generate or use emission credits under this part 1042. These engines may generate credits under the ABT provisions in 40 CFR part(s) 86, 89, 92, 1033, or 1039, as applicable. These engines must use emission credits under 40 CFR part(s) 86, 89, 92, 1033, or 1039 as applicable if they are certified to an FEL that exceeds an emission standard.

(i) *Operator requirements*. The requirements specified for vessel manufacturers, owners, and operators in this subpart (including requirements in 40 CFR part 1068) apply to these engines whether they are certified under this part 1042 or another part as allowed by this section.

[73 37243, June 30, 2008, as amended at 75 FR 23005, Apr. 30, 2010]

§ 1042.610 Certifying auxiliary marine engines to land-based standards.

This section applies to auxiliary marine engines that are identical to certified land-based engines. *See* § 1042.605 for provisions that apply to propulsion marine engines or auxiliary marine engines that are modified for marine applications. This section does not apply for Category 3 engines.

(a) *General provisions*. If you are an engine manufacturer, this section allows you to introduce new marine engines into U.S. commerce if they are already certified to the requirements that apply to compression-ignition engines under 40 CFR part 89 or 1039 for the appropriate model year. If you comply with all the provisions of this section, we consider the certificate issued under 40 CFR part 89 or 1039 for each engine to also be a valid certificate of conformity under this part 1042 for its model year, without a separate application for certification under the requirements of this part 1042.

(b) *Vessel-manufacturer provisions*. If you are not an engine manufacturer, you may install an engine certified for land-based applications in a marine vessel as long as you meet all the qualifying criteria and requirements specified in paragraphs (d) and (e) of this section. If you modify the non-marine engine, we will consider you a manufacturer of a new marine engine. Such engine modifications prevent you from using the provisions of this section.

(c) *Liability*. Engines for which you meet the requirements of this section are exempt from all the requirements and prohibitions of this part, except for those specified in this section. Engines exempted under this section must meet all the applicable requirements from 40 CFR part 89 or 1039. This paragraph (c) applies to engine manufacturers, vessel

manufacturers that use such an engine, and all other persons as if the engine were used in its originally intended application. The prohibited acts of 40 CFR 1068.101(a)(1) apply to these new engines and vessels; however, we consider the certificate issued under 40 CFR part 89 or 1039 for each engine to also be a valid certificate of conformity under this part 1042 for its model year. If we make a determination that these engines do not conform to the regulations during their useful life, we may require you to recall them under 40 CFR part 89 or 1068.

(d) *Qualifying criteria.* If you are an engine manufacturer and meet all the following criteria and requirements regarding your new marine engine, the engine is eligible for an exemption under this section:

(1) The marine engine must be identical in all material respects to a land-based engine covered by a valid certificate of conformity for the appropriate model year showing that it meets emission standards for engines of that power rating under 40 CFR part 89 or 1039.

(2) The engines may not be used as propulsion marine engines.

(3) You must show that the number of auxiliary marine engines from the engine family must be smaller than the number of land-based engines from the engine family sold in the United States, as follows:

(i) If you are the original manufacturer of the engine, base this showing on your sales information.

(ii) In all other cases, you must get the original manufacturer of the engine to confirm this based on its sales information.

(e) *Specific requirements.* If you are an engine manufacturer or vessel manufacturer using this exemption, you must do all of the following:

(1) Make sure the original engine label will remain clearly visible after installation in the vessel. This label or a supplemental label must identify that the original certification is valid for auxiliary marine applications.

(2) Send a signed letter to the Designated Compliance Officer by the end of each calendar year (or less often if we tell you) with all the following information:

(i) Identify your full corporate name, address, and telephone number.

(ii) List the engine models you expect to produce under this exemption in the coming year and describe your basis for meeting the sales restrictions of paragraph (d)(3) of this section.

(iii) State: ''We produce each listed engine model for marine application without making any changes that could increase its certified emission levels, as described in 40 CFR 1042.610.''.

(3) If you are the certificate holder, you must describe in your application for certification how you plan to produce engines for both land-based and auxiliary marine applications, including projected sales of auxiliary marine engines to the extent this can be determined. If the projected marine sales are substantial, we may ask for the year-end report of production volumes to include actual auxiliary marine engine sales.

(f) *Failure to comply.* If your engines do not meet the criteria listed in paragraph (d) of this section, they will be subject to the standards, requirements, and prohibitions of this part 1042 and the certificate issued under 40 CFR part 89 or 1039 will not be deemed to also be a certificate issued under this part 1042. Introducing these engines into U.S. commerce as marine engines without a valid exemption or certificate of conformity under this part 1042 violates the prohibitions in 40 CFR 1068.101(a)(1).

(g) *Participation in averaging, banking and trading.* Engines using this exemption may not generate or use emission credits under this part 1042. These engines may generate credits under the ABT provisions in 40 CFR part 89 or 1039, as applicable. These engines must use emission credits under 40 CFR part 89 or 1039 as applicable if they are certified to an FEL that exceeds an emission standard.

(h) *Operator requirements.* The requirements specified for vessel manufacturers, owners, and operators in this subpart (including requirements in 40 CFR part 1068) apply to these engines whether they are certified under this part 1042 or another part as allowed by this section.

[73 37243, June 30, 2008, as amended at 75 FR 23006, Apr. 30, 2010]

§ 1042.615 Replacement engine exemption.

For Category 1 and Category 2 replacement engines, apply the provisions of 40 CFR 1068.240 as described in this section. In unusual circumstances, you may ask us to allow you to apply these provisions for a new Category 3 engine.

(a) This paragraph (a) applies instead of the provisions of 40 CFR 1068.240(b)(3). The prohibitions in 40 CFR 1068.101(a)(1) do not apply to a new replacement engine if all the following conditions are met:

(1) You use good engineering judgment to determine that no engine certified to the current requirements of this part is produced by any manufacturer with the appropriate physical or performance characteristics to repower the vessel.

(2) You make a record of your determination for each replacement engine with the following information and keep these records for eight years:

(i) If you determine that no engine certified to the current requirements of this part is available with the appropriate performance characteristics, explain why certified engines produced by you and other manufacturers cannot be used as a replacement because they are not similar to the engine being replaced in terms of power or speed.

(ii) You may determine that all engines certified to the current requirements of this part that have appropriate performance characteristics are not available because they do not have the appropriate physical characteristics. If this is the case, explain why these certified engines produced by you and other manufacturers cannot be used as a replacement because their weight or dimensions are substantially different than those of the engine being replaced, or because they will not fit within the vessel's engine compartment or engine room.

(iii) In evaluating appropriate physical or performance characteristics, you may account for compatibility with vessel components you would not otherwise replace when installing a new engine, including transmissions or reduction gears, drive shafts or propeller shafts, propellers, cooling systems, operator controls, or electrical systems for generators or indirect-drive configurations. If you make your determination on this basis, you must identify the vessel components that are incompatible with engines certified to current standards and explain how they are incompatible and why it would be unreasonable to replace them.

(iv) In evaluating appropriate physical or performance characteristics, you may account for compatibility in a set of two or more propulsion engines on a vessel where only one of the engines needs replacement, but only if each engine not needing replacement has operated for less than 75 percent of its applicable useful life in hours or years (see § 1042.101). If any engine not otherwise needing replacement exceeds this 75 percent threshold, your determination must consider replacement of all the propulsion engines.

(v) In addition to the determination specified in paragraph (a)(1) of this section, you must make a separate determination for your own product line addressing every tier of emission standards that is more stringent than the emission standards for the engine being replaced. For example, if the engine being replaced was built before the Tier 1 standards started to apply and engines of that size are currently subject to Tier 3 standards, you must consider whether any Tier 1 or Tier 2 engines that you produce have the appropriate physical and performance characteristics for replacing the old engine; if you can produce a Tier 2 engine with the appropriate physical and performance characteristics, you must use it as the replacement engine.

(3) You must notify us within 30 days after you ship each replacement engine under this section. Your notification must include all the following things and be signed by an authorized representative of your company:

(i) A copy of your records describing how you made the determination described in paragraph (a)(2) of this section for this particular engine.

(ii) The total number of replacement engines you have shipped in the applicable calendar year, from all your marine engine models.

(iii) The following statement:

I certify that the statements and information in the enclosed document are true, accurate, and complete to the best of my knowledge. I am aware that there are significant civil and criminal penalties for submitting false statements and information, or omitting required statements and information.

(4) The replacement engine must conform to the applicable requirements of 40 CFR part 1043. Note that 40 CFR 1043.10 specifies allowances for vessels that operate only domestically.

(b) Modifying a vessel to significantly increase its value within six months after installing a replacement engine produced under this section is a violation of 40 CFR 1068.101(a)(1).

(c) We may void an exemption for an engine if we determine that any of the conditions described in paragraph (a) of this section are not met.

(d) We may reduce the reporting and recordkeeping requirements in this section.

[73 37243, June 30, 2008, as amended at 73 FR 59194, Oct. 8, 2008; 75 FR 23006, Apr. 30, 2010]

§ 1042.620 Engines used solely for competition.

The provisions of this section apply for new Category 1 engines and vessels built on or after January 1, 2009.

(a) We may grant you an exemption from the standards and requirements of this part for a new engine on the grounds that it is to be used solely for competition. The requirements of this part, other than those in this section, do not apply to engines that we exempt for use solely for competition.

(b) We will exempt engines that we determine will be used solely for competition. The basis of our determination is described in paragraphs (c) and (d) of this section. Exemptions granted under this section are good for only one model year and you must request renewal for each subsequent model year. We will not approve your renewal request if we determine the engine will not be used solely for competition.

(c) Engines meeting all the following criteria are considered to be used solely for competition:

(1) Neither the engine nor any vessels containing the engine may be displayed for sale in any public dealership or otherwise offered for sale to the general public. Note that this does not preclude display of these engines as long as they are not available for sale to the general public.

(2) Sale of the vessel in which the engine is installed must be limited to professional racing teams, professional racers, or other qualified racers. For replacement engines, the sale of the engine itself must be limited to professional racing teams, professional racers, other qualified racers, or to the original vessel manufacturer.

(3) The engine and the vessel in which it is installed must have performance characteristics that are substantially superior to noncompetitive models.

(4) The engines are intended for use only as specified in paragraph (e) of this section.

(d) You may ask us to approve an exemption for engines not meeting the criteria listed in paragraph (c) of this section as long as you have clear and convincing evidence that the engines will be used solely for competition.

(e) Engines are considered to be used solely for competition only if their use is limited to competition events sanctioned by the U.S. Coast Guard or another public organization with authorizing permits for participating competitors. Operation of such engines may include only racing events, trials to qualify for racing events, and practice associated with racing events. Authorized attempts to set speed records are also considered racing events. Engines will not be considered to be used solely for competition if they are ever used for any recreational or other noncompetitive purpose. Use of exempt engines in any recreational events, such as poker runs and lobsterboat races, is a violation of 40 CFR 1068.101(b)(4).

(f) You must permanently label engines exempted under this section to clearly indicate that they are to be used only for competition. Failure to properly label an engine will void the exemption for that engine.

(g) If we request it, you must provide us any information we need to determine whether the engines are used solely for competition. This would include documentation regarding the number of engines and the ultimate purchaser of each engine as well as any

documentation showing a vessel manufacturer's request for an exempted engine. Keep these records for five years.

[75 FR 23006, Apr. 30, 2010]

§ 1042.625 Special provisions for engines used in emergency applications.

This section describes an exemption that is available for certain Category 1 and Category 2 engines. This exemption is not available for Category 3 engines.

(a) Except as specified in paragraph (d) of this section, the prohibitions in § 1068.101(a)(1) do not apply to a new engine that is subject to Tier 4 standards if the following conditions are met:

(1) The engine is intended for installation in one of the following vessels or applications:

(i) A lifeboat approved by the U.S. Coast Guard under approval series 160.135 (see for example 46 CFR 199.201(a)(1)), as long as such a vessel is not also used as a launch or tender.

(ii) A rescue boat approved by the U.S. Coast Guard under approval series 160.156 (see for example 46 CFR 199.202(a)).

(iii) Generator sets or other auxiliary equipment that qualify as final emergency power sources under 46 CFR part 112.

(2) The engine meets the Tier 3 emission standards specified in § 1042.101 as specified in 40 CFR 1068.265.

(3) The engine is used only for its intended purpose, as specified on the emission control information label.

(b) Except as specified in paragraph (d) of this section, the prohibitions in § 1068.101(a)(1) do not apply to a new engine that is subject to Tier 3 standards according to the following provisions:

(1) The engine must be intended for installation in a lifeboat or a rescue boat as specified in paragraph (a)(1)(i) or (ii) of this section.

(2) This exemption is available from the initial effective date for the Tier 3 standards until the engine model (or one of comparable size, weight, and performance) has been certified as complying with the Tier 3 standards and Coast Guard requirements.

(3) The engine must meet the Tier 2 emission standards specified in Appendix I of this part as specified in 40 CFR 1068.265.

(c) If you introduce an engine into U.S. commerce under this section, you must meet the labeling requirements in § 1042.135, but add one of the following statements instead of the compliance statement in § 1042.135(c)(10):

(1) For lifeboats and rescue boats, add the following statement:

THIS ENGINE DOES NOT COMPLY WITH CURRENT U.S. EPA EMISSION STANDARDS UNDER 40 CFR 1042.625 AND IS FOR USE SOLELY IN LIFEBOATS OR RESCUE BOATS (COAST GUARD APPROVAL SERIES 160.135 OR 160.156). INSTALLATION OR USE OF THIS ENGINE IN ANY OTHER APPLICATION MAY BE A VIOLATION OF FEDERAL LAW SUBJECT TO CIVIL PENALTY.

(2) For engines serving as final emergency power sources, add the following statement:

THIS ENGINE DOES NOT COMPLY WITH CURRENT U.S. EPA EMISSION STANDARDS UNDER 40 CFR 1042.625 AND IS FOR USE SOLELY IN EMERGENCY EQUIPMENT REGULATED BY 46 CFR 112. INSTALLATION OR USE OF THIS ENGINE IN ANY OTHER APPLICATION MAY BE A VIOLATION OF FEDERAL LAW SUBJECT TO CIVIL PENALTY.

(d) Introducing into commerce a vessel containing an engine exempted under this section violates the prohibitions in 40 CFR 1068.101(a)(1) where the vessel is not covered by paragraph (a) or (b) of this section, unless it is exempt under a different provision. Similarly, using such an engine or vessel as something other than a lifeboat, rescue boat, or emergency engine as specified in paragraph (a)(1) of this section violates the prohibitions in 40 CFR 1068.101(a)(1), unless it is exempt under a different provision.

[73 37243, June 30, 2008, as amended at 75 FR 23006, Apr. 30, 2010]

§ 1042.630 Personal-use exemption.

This section applies to individuals who manufacture vessels for personal use with used Category 1 engines. If you and your vessel meet all the conditions of this section, the vessel and its engine are considered to be exempt from the standards and requirements of this part that apply to new engines and new vessels. The prohibitions in

§ 1068.101(a)(1) do not apply to engines exempted under this section. For example, you may install an engine that was not certified as a marine engine.

(a) The vessel may not be manufactured from a previously certified vessel, nor may it be manufactured from a partially complete vessel that is equivalent to a certified vessel. The vessel must be manufactured primarily from unassembled components, but may incorporate some preassembled components. For example, fully preassembled steering assemblies may be used. You may also power the vessel with an engine that was previously used in a highway or land-based nonroad application.

(b) The vessel may not be sold within five years after the date of final assembly.

(c) No individual may manufacture more than one vessel in any ten-year period under this exemption.

(d) You may not use the vessel in any revenue-generating service or for any other commercial purpose, except that you may use a vessel exempt under this section for commercial fishing that you personally do.

(e) This exemption may not be used to circumvent the requirements of this part or the requirements of the Clean Air Act. For example, this exemption would not cover a case in which a person sells an almost completely assembled vessel to another person, who would then complete the assembly. This would be considered equivalent to the sale of the complete new vessel. This section also does not allow engine manufacturers to produce new engines that are exempt from emission standards and it does not provide an exemption from the prohibition against tampering with certified engines.

(f) The vessel must be a vessel that is not classed or subject to Coast Guard inspections or surveys.

[73 37243, June 30, 2008, as amended at 75 FR 23006, Apr. 30, 2010]

§ 1042.635 National security exemption.

The standards and requirements of this part and prohibitions in § 1068.101(a)(1) do not apply to engines exempted under this section.

(a) An engine is exempt without a request if it will be used or owned by an agency of the Federal government responsible for national defense, where the vessel in which it is installed has armor, permanently attached weaponry, specialized electronic warfare systems, unique stealth performance requirements, and/or unique combat maneuverability requirements. This applies to both remanufactured and freshly manufactured marine engines. Gas turbine engines are also exempt without a request if they will be owned by an agency of the Federal government responsible for national defense.

(b) Manufacturers may request a national security exemption for engines not meeting the conditions of paragraph (a) of this section, as long as the request is endorsed by an agency of the federal government responsible for national defense. Agencies of the federal government responsible for national defense may request exemptions for remanufactured engines. In your request, explain why you need the exemption.

(c) [Reserved]

(d) Add a legible label, written in English, to all engines exempted under this section. The label must be permanently secured to a readily visible part of the engine needed for normal operation and not normally requiring replacement, such as the engine block. This label must include at least the following items:

(1) The label heading ''EMISSION CONTROL INFORMATION''.

(2) Your corporate name and trademark.

(3) Engine displacement, family identification, and model year of the engine (as applicable), or whom to contact for further information.

(4) The statement ''THIS ENGINE HAS AN EXEMPTION FOR NATIONAL SECURITY UNDER 40 CFR 1042.635.''.

[73 37243, June 30, 2008, as amended at 74 FR 8426, Feb. 24, 2009; 75 FR 23006, Apr. 30, 2010]

§ 1042.640 Special provisions for branded engines.

The following provisions apply if you identify the name and trademark of another company instead of your own on your emission control information label, as provided by § 1042.135(c)(2):

(a) You must have a contractual agreement with the other company that obligates that company to take the following steps:

(1) Meet the emission warranty requirements that apply under § 1042.120. This may involve a separate agreement involving reimbursement of warranty-related expenses.

(2) Report all warranty-related information to the certificate holder.

(b) In your application for certification, identify the company whose trademark you will use.

(c) You remain responsible for meeting all the requirements of this chapter, including warranty and defect-reporting provisions.

§ 1042.650 Exemptions for migratory vessels and auxiliary engines on Category 3 vessels.

The provisions of this section apply for Category 1 and Category 2 engines, including auxiliary engines installed on vessels with Category 3 propulsion engines. These provisions do not apply for any Category 3 engines. All engines exempted under this section must comply with the applicable requirements of 40 CFR part 1043.

(a) *Temporary exemption.* A vessel owner may ask us for a temporary exemption from the tampering prohibition in 40 CFR 1068.101(b)(1) for a vessel if it will operate only in areas outside the United States where ULSD is not available. In your request, describe where the vessel will operate, how long it will operate there, why ULSD will be unavailable, and how you will modify the engine, including its emission controls. If we approve your request, you may modify the engine, but only as needed to disable or remove the emission controls needed for meeting the Tier 4 standards. You must return the engine to its original certified configuration before the vessel returns to the United States to avoid violating the tampering prohibition in 40 CFR 1068.101(b)(1). We may set additional conditions to prevent circumvention of the provisions of this part.

(b) *SOLAS exemption.* We may approve a permanent exemption from the prohibitions in 40 CFR 1068.101(a)(1) for an engine that is subject to Tier 4 standards as described in this paragraph (b).

(1) Vessel owners may ask for a permanent exemption from the Tier 4 standards for an engine that will be installed on vessels that will operate for extended periods outside the United States, provided they demonstrate all of the following are true:

(i) Prior to introduction into service, the vessel will comply with applicable certification requirements for international safety pursuant to the U.S. Coast Guard and the International Convention for the Protection of Life at Sea (SOLAS). The vessel owner must maintain compliance with these requirements for the life of the exempted engine.

(ii) The vessel will be used in areas outside of the United States where ULSD will not be available.

(iii) The mix of vessels with engines certified to Tier 3 or earlier standards in the owner's current fleet and the owner's current business operation of those vessels makes the exemption necessary. Note that because of the large fraction of pre-Tier 4 engines in the fleet prior to 2021, a request for a Tier 4 exemption prior to that year must clearly demonstrate that unusual circumstances apply.

(2) An engine exempted under this paragraph (b) must meet the Tier 3 emission standards described in § 1402.101, subject to the procedural requirements of 40 CFR 1068.265.

(3) If you introduce an engine into U.S. commerce under this section, you must meet the labeling requirements in § 1042.135, but add the following statement instead of the compliance statement in § 1042.135(c)(10):

THIS ENGINE DOES NOT COMPLY WITH CURRENT U.S. EPA EMISSION STANDARDS UNDER 40 CFR 1042.650 AND IS FOR USE SOLELY IN SOLAS VESSELS. INSTALLATION OR USE OF THIS ENGINE IN ANY OTHER APPLICATION MAY BE A VIOLATION OF FEDERAL LAW SUBJECT TO CIVIL PENALTY.

(4) Operating a vessel containing an engine exempted under this paragraph (b) violates the prohibitions in 40 CFR 1068.101(a)(1) if the vessel in not in full compliance with applicable requirements for international safety specified in paragraph (b)(1)(i) of this section.

(c) *Vessels less than 500 gross tons*. In unusual circumstances for vessels less than 500 gross tons, we may approve a vessel owner's request for a permanent exemption from the prohibitions in 40 CFR 1068.101(a)(1) for an engine that is subject to Tier 4 standards that will operate for extended periods outside the United States without it being in compliance with applicable certification requirements for international safety. We may set appropriate additional conditions on such exemptions, and may void the exemption if those conditions are not met.

(d) *Auxiliary engines on Category 3 vessels*. As specified in this paragraph (d), auxiliary engines on vessels with Category 3 propulsion engines are exempt from the standards of this part.

(1) To be eligible for this exemption, the engine must meet all of the following criteria.

(i) The engine must conform fully to the applicable NO_X standards of Annex VI and meet all other applicable requirements of 40 CFR part 1043. Engines installed on vessels constructed on or after January 1, 2016 must conform fully to the Annex VI Tier III NO_X standards under 40 CFR part 1043 and meet all other applicable requirements in 40 CFR part 1043. Engines that would otherwise be subject to the Tier 4 standards of this part must also conform fully to the Annex VI Tier III NO_X standards under 40 CFR part 1043.

(ii) The engine may not be used for propulsion (except for emergency engines).

(iii) The engine may be equipped with on-off NO_X controls, provided it conforms to the requirements of § 1042.115(g).

(2) You must notify the Designated Compliance Officer of your intent to use this exemption when applying for the EIAPP certificate for the engine under 40 CFR part 1043.

(3) The remanufactured engine requirements of subpart I of this part do not apply.

(4) If you introduce an engine into U.S. commerce under this paragraph (d), you must meet the labeling requirements in § 1042.135, but add the following statement instead of the compliance statement in § 1042.135(c)(10):

THIS ENGINE DOES NOT COMPLY WITH CURRENT U.S. EPA EMISSION STANDARDS UNDER 40 CFR 1042.650 AND IS FOR USE SOLELY IN VESSELS WITH CATEGORY 3 PROPULSION ENGINES. INSTALLATION OR USE OF THIS ENGINE IN ANY OTHER APPLICATION MAY BE A VIOLATION OF FEDERAL LAW SUBJECT TO CIVIL PENALTY.

[73 37243, June 30, 2008, as amended at 75 FR 23007, Apr. 30, 2010]

§ 1042.655 Special certification provisions for—Category 3 engines with aftertreatment.

This section describes an optional approach for demonstrating for certification that catalyst-equipped engines (or engines equipped with other aftertreatment devices) comply with applicable emission standards. You must use good engineering judgment for all aspects of this allowance.

(a) *Eligibility*. You may use the provisions of this section without our prior approval to demonstrate that aftertreatment-equipped Category 3 engines meet the Tier 3 standards. In unusual circumstances, we may also allow you to use this approach to demonstrate that aftertreatment-equipped Category 2 engines meet the Tier 4 standards. We will generally approve this for Category 2 engines only if the engines are too large to be practically tested in a laboratory with a fully assembled aftertreatment system. If we approve this approach for a Category 2 engine, interpret references to Tier 3 in this section to mean Tier 4, and interpret references to Tier 2 in this section to mean Tier 3.

(b) *Required testing*. The emission-data engine must be tested as specified in Subpart F to verify that the engine-out emissions comply with the Tier 2 standards. The catalyst material or other aftertreatment device must be tested under conditions that accurately represent actual engine conditions for the test points. This catalyst or aftertreatment testing may be performed on a benchscale.

(c) *Engineering analysis*. Include with your application a detailed engineering analysis describing how the test data collected for the engine and aftertreatment demonstrate that all

engines in the family will meet all applicable emission standards. We may require that you submit this analysis separately from your application, or that you obtain preliminary approval under § 1042.210.

(d) *Verification*. You must verify your design by testing a complete production engine with installed aftertreatment in the final assembled configuration. Unless we specify otherwise, do this by complying with production-line testing requirements of subpart D of this part.

(e) *Other requirements*. All other requirements of this part, including the non-testing requirements for certification, apply for these engines. Nothing in this section affects requirements in other regulatory parts, such as Coast Guard safety requirements.

[75 FR 23007, Apr. 30, 2010]

§ 1042.660 Requirements for vessel manufacturers, owners, and operators.

(a) For vessels equipped with emission controls requiring the use of specific fuels, lubricants, or other fluids, owners and operators must comply with the manufacturer/remanufacturer's specifications for such fluids when operating the vessels. Failure to comply with the requirements of this paragraph is a violation of 40 CFR 1068.101(b)(1). For marine vessels that are excluded from the requirements of 40 CFR part 1043 because they operate only domestically, it is also a violation of 40 CFR 1068.101(b)(1) to operate the vessel using residual fuel on or after January 1, 2015. Note that 40 CFR part 80 also includes provisions that restrict the use of certain fuels by certain marine engines.

(b) For vessels equipped with SCR systems requiring the use of urea or other reductants, owners and operators must report to us within 30 days any operation of such vessels without the appropriate reductant. Failure to comply with the requirements of this paragraph is a violation of 40 CFR 1068.101(a)(2). Note that such operation is a violation of 40 CFR 1068.101(b)(1).

(c) The provisions of this paragraph (c) apply for marine vessels containing Category 3 engines.

(1) The requirements of this paragraph (c)(1) apply only for Category 3 engines. All maintenance, repair, adjustment, and alteration of Category 3 engines subject to the provisions of this part performed by any owner, operator or other maintenance provider must be perform using good engineering judgment, in such a manner that the engine continues (after the maintenance, repair, adjustment or alteration) to meet the emission standards it was certified as meeting prior to the need for service. This includes but is not limited to complying with the maintenance instructions described in § 1042.125. Adjustments are limited to the range specified by the engine manufacturer in the approved application for certification. Note that where a repair (or other maintenance) cannot be completed while at sea, it is not a violation to continue operating the engine to reach your destination.

(2) It is a violation of 40 CFR 1068.101(b)(1) to operate the vessel with the engine adjusted outside of the specified adjustable range. Each two-hour period of such operation constitutes a separate offense. A violation lasting less than two hours constitutes a single offense.

(3) The owner and operator of the engine must maintain on board the vessel records of all maintenance, repair, and adjustment that could reasonably affect the emission performance of any engine subject to the provision of this part. Owners and operators must also maintain, on board the vessel, records regarding certification, parameter adjustment, and fuels used. For engines that are automatically adjusted electronically, all adjustments must be logged automatically. Owners and operators must make these records available to EPA upon request. These records must include the following:

(i) The Technical File, Record Book of Engine Parameters, and bunker delivery notes as specified in 40 CFR 1043.70. The Technical File must be transferred to subsequent purchasers in the event of a sale of the engine or vessel. (ii) Specific descriptions of engine maintenance, repair, adjustment, and alteration (including rebuilding). The descriptions must include at least the

date, time, and nature of the maintenance, repair, adjustment, or alteration and the position of the vessel when the maintenance, repair, adjustment, or alteration was made.

(iii) Emission-related maintenance instructions provided by the manufacturer. These instructions must be transferred to subsequent purchasers in the event of a sale of the engine or vessel.

(4) Owners and operators of engines equipped with on-off emission controls must comply with the requirements of this paragraph (c)(4) whenever a malfunction of the emission controls is indicated as specified in § 1042.110(d). You must determine the cause of the malfunction and remedy it consistent with paragraph (c)(1) of this section. *See* paragraph (b) of this section if the malfunction is due to either a lack of reductant or inadequate reductant quality. If the malfunction occurs during the useful life, report the malfunction to the certificate holder for investigation and compliance with defect reporting requirements of 40 CFR 1068.501 (unless the malfunction is due to operation without adequate urea or other malmaintenance).

(d) For each marine vessel containing a Category 3 engine, the owner must annually review the vessel's records and submit to EPA a signed statement certifying compliance during the preceding year with the requirements of this part that are applicable to owners and operators of such vessels. Alternately, if review of the vessel's records indicates that there has been one or more violations of the requirements of this part, the owner must submit to EPA a signed statement specifying the noncompliance, including the nature of the noncompliance, the time of the noncompliance, and any efforts made to remedy the noncompliance. The statement of compliance (or noncompliance) required by this paragraph must be signed by the executive with responsibility for marine activities of the owner. If the vessel is operated by a different business entity than the vessel owner, the reporting requirements of this paragraph (e) apply to both the owner and the operator. Compliance with these review and certification requirements by either the vessel owner or the vessel operator with respect to a compliance statement will be considered compliance with these requirements by both of these parties for that compliance statement. The executive(s) may authorize a captain or other primary operator to conduct this review and submit the certification, provided that the certification statement is accompanied by written authorization for that individual to submit such statements. The Administrator may waive the requirements of this paragraph when equivalent assurance of compliance is otherwise available.

(e) Manufacturers, owners and operators must allow emission tests and inspections required by this part to be conducted and must provide reasonable assistance to perform such tests or inspections.

[75 FR 23007, Apr. 30, 2010]

§ 1042.670 Special provisions for gas turbine engines.

The provisions of this section apply for gas turbine engines.

(a) *Implementation schedule.* The requirements of this part do not apply for gas turbine engines below 600 kW before the 2014 model year. The requirements of this part do not apply for Tier 3 or earlier gas turbine engines at or above 600 kW. The provisions of 40 CFR part 1068 also do not apply for gas turbine engines produced in these earlier model years.

(b) *Special test procedures.* Manufacturers seeking certification of gas turbine engines must obtain preliminary approval of the test procedures to be used, consistent with § 1042.210 and 40 CFR 1065.10.

(c) *Remanufacturing.* The requirements of subpart I of this part do not apply for gas turbine engines.

(d) *Equivalent displacement.* Apply displacement-based provisions of this part by calculating an equivalent displacement from the maximum engine power. The equivalent per-cylinder displacement (in liters) equals the maximum engine power in kW multiplied by 0.00311, except that all gas turbines with maximum engine power above 9,300 kW are considered to have an equivalent per-cylinder displacement of 29.0 liters.

(e) *Emission-related components.* All components meeting the criteria of 40 CFR 1068.501(a)(1) are considered to be emission-related components with respect to maintenance, warranty, and defect reporting for gas turbine engines.

(f) *Engines used for national defense. See* § 1042.635 for provisions related to exempting gas turbine engines used for national defense.

[75 FR 23008, Apr. 30, 2010]

Subpart H—Averaging, Banking, and Trading for Certification

§ 1042.701 General provisions.

This subpart describes how you may use emission credits to demonstrate that Category 1 and Category 2 engines comply with emission standards under this part. The provisions of this subpart do not apply for Category 3 engines.

(a) You may average, bank, and trade (ABT) emission credits for purposes of certification as described in this subpart to show compliance with the standards of this part. Participation in this program is voluntary.

(b) The definitions of subpart J of this part apply to this subpart. The following definitions also apply:

(1) *Actual emission credits* means emission credits you have generated that we have verified by reviewing your final report.

(2) *Applicable emission standard* means an emission standard that is specified in subpart B of this part. Note that for other subparts, ''applicable emission standard'' is defined to also include FELs.

(3) *Averaging set* means a set of engines in which emission credits may be exchanged only with other engines in the same averaging set.

(4) *Broker* means any entity that facilitates a trade of emission credits between a buyer and seller.

(5) *Buyer* means the entity that receives emission credits as a result of a trade.

(6) *Reserved emission credits* means emission credits you have generated that we have not yet verified by reviewing your final report.

(7) *Seller* means the entity that provides emission credits during a trade.

(8) *Standard* means the emission standard that applies under subpart B of this part for engines not participating in the ABT program of this subpart.

(9) *Trade* means to exchange emission credits, either as a buyer or seller.

(c) Emission credits may be exchanged only within an averaging set. Except as specified in paragraph (d) of this section, the following criteria define the applicable averaging sets:

(1) Recreational engines.

(2) Commercial Category 1 engines.

(3) Category 2 engines.

(d) Emission credits generated by commercial Category 1 engine families may be used for compliance by Category 2 engine families. Such credits must be discounted by 25 percent.

(e) You may not use emission credits generated under this subpart to offset any emissions that exceed an FEL or standard. This applies for all testing, including certification testing, in-use testing, selective enforcement audits, and other production-line testing. However, if emissions from an engine exceed an FEL or standard (for example, during a selective enforcement audit), you may use emission credits to recertify the engine family with a higher FEL that applies only to future production.

(f) Engine families that use emission credits for one or more pollutants may not generate positive emission credits for another pollutant.

(g) Emission credits may be used in the model year they are generated or in future model years. Emission credits may not be used for past model years.

(h) You may increase or decrease an FEL during the model year by amending your application for certification under § 1042.225.

(i) You may use NO_X+HC credits to show compliance with a NO_X emission standard or use NO_X credits to show compliance with a NO_X+HC emission standard.

[73 FR 37243, June 30, 2008, as amended at 75 FR 23008, Apr. 30, 2010]

§ 1042.705 Generating and calculating emission credits.

The provisions of this section apply separately for calculating emission credits for NO_X, NO_X+HC, or PM.

(a) For each participating family, calculate positive or negative emission credits relative to the otherwise applicable emission standard. Calculate positive emission credits for a family that has an FEL below the standard. Calculate negative emission credits for a family that has an FEL above the standard. Sum your positive and negative credits for the model year before rounding. Round the sum of emission credits to the nearest kilogram (kg) using consistent units throughout the following equation:

$$\text{Emission credits (kg)} = (\text{Std} - \text{FEL}) \times (\text{Volume}) \times (\text{Power}) \times (\text{LF}) \times (\text{UL}) \times (10^{-3})$$

Where:

Std = The emission standard, in g/kW-hr.

FEL = The family emission limit for the engine family, in g/kW-hr.

Volume = The number of engines eligible to participate in the averaging, banking, and trading program within the given engine family during the model year, as described in paragraph (c) of this section.

Power = The average value of maximum engine power of all the engine configurations within an engine family, calculated on a production-weighted basis, in kilowatts.

LF = Load factor. Use 0.69 for propulsion marine engines and 0.51 for auxiliary marine engines. We may specify a different load factor if we approve the use of special test procedures for an engine family under 40 CFR 1065.10(c)(2), consistent with good engineering judgment.

UL = The useful life for the given engine family, in hours.

(b) [Reserved]

(c) In your application for certification, base your showing of compliance on projected production volumes for engines whose point of first retail sale is in the United States. As described in § 1042.730, compliance with the requirements of this subpart is determined at the end of the model year based on actual production volumes for engines whose point of first retail sale is in the United States. Do not include any of the following engines to calculate emission credits:

(1) Engines permanently exempted under subpart G of this part or under 40 CFR part 1068.

(2) Exported engines.

(3) Engines not subject to the requirements of this part, such as those excluded under § 1042.5.

(4) [Reserved]

(5) Any other engines, where we indicate elsewhere in this part 1042 that they are not to be included in the calculations of this subpart.

[73 FR 37243, June 30, 2008, as amended at 75 FR 23008, Apr. 30, 2010]

§ 1042.710 Averaging emission credits.

(a) Averaging is the exchange of emission credits among your engine families.

(b) You may certify one or more engine families to an FEL above the emission standard, subject to the FEL caps and other provisions in subpart B of this part, if you show in your application for certification that your projected balance of all emission-credit transactions in that model year is greater than or equal to zero.

(c) If you certify an engine family to an FEL that exceeds the otherwise applicable emission standard, you must obtain enough emission credits to offset the engine family's deficit by the due date for the final report required in § 1042.730. The emission credits used to address the deficit may come from your other engine families that generate emission credits in the same model year, from emission credits you have banked, or from emission credits you obtain through trading.

§ 1042.715 Banking emission credits.

(a) Banking is the retention of emission credits by the manufacturer generating the emission credits for use in future model years for averaging or trading.

(b) You may designate any emission credits you plan to bank in the reports you submit under § 1042.730 as reserved credits. During the model year and before the due date for the final report, you may designate your reserved emission credits for averaging or trading.

(c) Reserved credits become actual emission credits when you submit your final report. However, we may revoke these emission credits if we are unable

to verify them after reviewing your reports or auditing your records.

[75 FR 23009, Apr. 30, 2010]

§ 1042.720 Trading emission credits.

(a) Trading is the exchange of emission credits between manufacturers. You may use traded emission credits for averaging, banking, or further trading transactions.

(b) You may trade actual emission credits as described in this subpart. You may also trade reserved emission credits, but we may revoke these emission credits based on our review of your records or reports or those of the company with which you traded emission credits. You may trade banked credits within an averaging set to any certifying manufacturer.

(c) If a negative emission credit balance results from a transaction, both the buyer and seller are liable, except in cases we deem to involve fraud. See § 1042.255(e) for cases involving fraud. We may void the certificates of all engine families participating in a trade that results in a manufacturer having a negative balance of emission credits. See § 1042.745.

[73 FR 37243, June 30, 2008, as amended at 75 FR 23009, Apr. 30, 2010]

§ 1042.725 Information required for the application for certification.

(a) You must declare in your application for certification your intent to use the provisions of this subpart for each engine family that will be certified using the ABT program. You must also declare the FELs you select for the engine family for each pollutant for which you are using the ABT program. Your FELs must comply with the specifications of subpart B of this part, including the FEL caps. FELs must be expressed to the same number of decimal places as the emission standards.

(b) Include the following in your application for certification:

(1) A statement that, to the best of your belief, you will not have a negative balance of emission credits for any averaging set when all emission credits are calculated at the end of the year.

(2) Detailed calculations of projected emission credits (positive or negative) based on projected production volumes. We may require you to include similar calculations from your other engine families to demonstrate that you will be able to avoid a negative credit balance for the model year. If you project negative emission credits for a family, state the source of positive emission credits you expect to use to offset the negative emission credits.

[73 FR 37243, June 30, 2008, as amended at 75 FR 23009, Apr. 30, 2010]

§ 1042.730 ABT reports.

(a) If any of your engine families are certified using the ABT provisions of this subpart, you must send an end-of-year report within 90 days after the end of the model year and a final report within 270 days after the end of the model year. We may waive the requirement to send the end-of-year report, as long as you send the final report on time.

(b) Your end-of-year and final reports must include the following information for each engine family participating in the ABT program:

(1) Engine-family designation.

(2) The emission standards that would otherwise apply to the engine family.

(3) The FEL for each pollutant. If you change the FEL after the start of production, identify the date that you started using the new FEL and/or give the engine identification number for the first engine covered by the new FEL. In this case, identify each applicable FEL and calculate the positive or negative emission credits under each FEL.

(4) The projected and actual U.S.-directed production volumes for the model year, as described in § 1042.705(c). If you changed an FEL during the model year, identify the actual production volume associated with each FEL.

(5) Maximum engine power for each engine configuration, and the average engine power weighted by U.S.-directed production volumes for the engine family.

(6) Useful life.

(7) Calculated positive or negative emission credits for the whole engine family. Identify any emission credits that you traded, as described in paragraph (d)(1) of this section.

(c) Your end-of-year and final reports must include the following additional information:

(1) Show that your net balance of emission credits from all your participating engine families in each averaging set in the applicable model year is not negative.

(2) State whether you will retain any emission credits for banking.

(3) State that the report's contents are accurate.

(d) If you trade emission credits, you must send us a report within 90 days after the transaction, as follows:

(1) Sellers must include the following information in their report:

(i) The corporate names of the buyer and any brokers.

(ii) A copy of any contracts related to the trade.

(iii) The engine families that generated emission credits for the trade, including the number of emission credits from each family.

(2) Buyers must include the following information in their report:

(i) The corporate names of the seller and any brokers.

(ii) A copy of any contracts related to the trade.

(iii) How you intend to use the emission credits, including the number of emission credits you intend to apply to each engine family (if known).

(e) Send your reports electronically to the Designated Compliance Officer using an approved information format. If you want to use a different format, send us a written request with justification for a waiver.

(f) Correct errors in your end-of-year report or final report as follows:

(1) You may correct any errors in your end-of-year report when you prepare the final report, as long as you send us the final report by the time it is due.

(2) If you or we determine within 270 days after the end of the model year that errors mistakenly decreased your balance of emission credits, you may correct the errors and recalculate the balance of emission credits. You may not make these corrections for errors that are determined more than 270 days after the end of the model year. If you report a negative balance of emission credits, we may disallow corrections under this paragraph (f)(2).

(3) If you or we determine anytime that errors mistakenly increased your balance of emission credits, you must correct the errors and recalculate the balance of emission credits.

[73 37243, June 30, 2008, as amended at 75 FR 23009, Apr. 30, 2010]

§ 1042.735 Recordkeeping.

(a) You must organize and maintain your records as described in this section. We may review your records at any time.

(b) Keep the records required by this section for at least eight years after the due date for the end-of-year report. You may not use emission credits for any engines if you do not keep all the records required under this section. You must therefore keep these records to continue to bank valid credits. Store these records in any format and on any media as long as you can promptly send us organized, written records in English if we ask for them. You must keep these records readily available. We may review them at any time.

(c) Keep a copy of the reports we require in § 1042.730.

(d) Keep records of the engine identification number for each engine you produce that generates or uses emission credits under the ABT program. You may identify these numbers as a range. If you change the FEL after the start of production, identify the date you started using each FEL and the range of engine identification numbers associated with each FEL. You must also identify the purchaser and destination for each engine you produce to the extent this information is available.

(e) We may require you to keep additional records or to send us relevant information not required by this section in accordance with the Clean Air Act.

[73 37243, June 30, 2008, as amended at 75 FR 23009, Apr. 30, 2010]

§ 1042.745 Noncompliance.

(a) For each engine family participating in the ABT program, the certificate of conformity is conditional upon full compliance with the provisions of this subpart during and after the model

year. You are responsible to establish to our satisfaction that you fully comply with applicable requirements. We may void the certificate of conformity for an engine family if you fail to comply with any provisions of this subpart.

(b) You may certify your engine family to an FEL above an emission standard based on a projection that you will have enough emission credits to offset the deficit for the engine family. However, we may void the certificate of conformity if you cannot show in your final report that you have enough actual emission credits to offset a deficit for any pollutant in an engine family.

(c) We may void the certificate of conformity for an engine family if you fail to keep records, send reports, or give us information we request.

(d) You may ask for a hearing if we void your certificate under this section (see § 1042.920).

Subpart I—Special Provisions for Remanufactured Marine Engines

§ 1042.801 General provisions.

This subpart describes how the provisions of this part 1042 apply for certain remanufactured marine engines.

(a) The requirements of this subpart apply for remanufactured Tier 2 and earlier commercial Category 1 and Category 2 marine engines at or above 600 kW, excluding those engines originally manufactured before 1973. Note that the requirements of this subpart do not apply for engines below 600 kW, Category 3 engines, engines installed on recreational vessels, or Tier 3 and later engines.

(b) Any person meeting the definition of ''remanufacturer'' in § 1042.901 may apply for a certificate of conformity for a remanufactured engine family.

(c) The rebuilding requirements of 40 CFR 1068.120 do not apply to remanufacturing of engines using a certified remanufacturing system under this subpart. However, the requirements of 40 CFR 1068.120 do apply to all other remanufacturing of engines.

(d) Unless specified otherwise, engines certified under this subpart are also subject to the other requirements of this part.

(e) For remanufactured engines required to have a valid certificate of conformity, placing a new marine engine back into service following remanufacturing is a violation of 40 CFR 1068.101(a)(1), unless it has a valid certificate of conformity for its model year and the required label.

(f) Remanufacturing systems that require a fuel change or use of a fuel additive may be certified under this part. However, they are not considered to be ''available'' with respect to triggering the requirement for an engine to be covered by a certificate of conformity under § 1042.815. The following provisions apply:

(1) Only fuels and additives registered under 40 CFR part 79 may be used under this paragraph (f).

(2) You must demonstrate in your application that the fuel or additive will actually be used by operators, including a description of how the vessels and dispensing tanks will be labeled. We may require you to provide the labels to the operators.

(3) You must also describe analytical methods that can be used by EPA or others to verify that fuel meets your specifications.

(4) You must provide clear instructions to the operators specifying that they may only use the specified fuel/additive, label their vessels and fuel dispensing tanks, and keep records of their use of the fuel/additive in order for their engine to be covered by your certificate. Use of the incorrect fuel (or fuel without the specified additive) or any other failure to comply with the requirements of this paragraph is a violation of 40 CFR 1068.101(b)(1).

(g) Vessels equipped with emission controls as part of a state or local retrofit program prior to January 1, 2017 are exempt from the requirements of this subpart, as specified in this paragraph (g).

(1) This exemption only applies for retrofit programs sponsored by a state government (or one of its political subdivisions) for the purpose of reducing emissions. The exemption does not apply where the sponsoring government specifies that inclusion in the retrofit program is not intended to provide an exemption from the requirements of this subpart.

(2) The prohibitions against tampering and defeat devices in 40 CFR

1068.101(b) and the rebuilding requirements in 40 CFR 1068.120 apply for the exempt engines in the same manner as if they were covered by a certificate.

(3) Vessel owners must request an exemption prior to remanufacturing the engine. Your request must include documentation that your vessel has been retrofitted consistent with the specifications of paragraph (g)(1) of this section, and a signed statement declaring that to be true. Except for the initial request for a specific vessel and a specific retrofit, you may consider your request to be approved unless we notify you otherwise within 30 days of the date that we receive your request.

[73 37243, June 30, 2008, as amended at 73 FR 59194, Oct. 8, 2008; 75 FR 23009, Apr. 30, 2010]

§ 1042.810 Requirements for owner/operators and installers during remanufacture.

This section describes how the remanufacturing regulations affect owner/operators and installers for engines subject to this subpart.

(a) See the definition of ''remanufacture'' in § 1042.901 to determine if you are remanufacturing your engine. (NOTE: Replacing cylinders one at a time may qualify as remanufacturing, depending on the interval between replacement.)

(b) See the definition of ''new marine engine'' in § 1042.901 to determine if remanufacturing your engine makes it subject to the requirements of this part. If the engine is considered to be new, it is subject to the certification requirements of this subpart, unless it is exempt under subpart G of this part.

(c) Your engine is not subject to the standards of this part if we determine that no certified remanufacturing system is available for your engine as described in § 1042.815. For engines that are remanufactured during multiple events within a five-year period, you are not required to use a certified system until all of your engine's cylinders have been replaced after the system became available. For example, if you remanufacture your 16-cylinder engine by replacing four cylinders each January and a system becomes available for your engine June 1, 2010, your engine must be in a certified configuration when you replace four cylinders in January of 2014. At that point, all 16 cylinders would have been replaced after June 1, 2010.

(d) You may comply with the certification requirements of this part for your remanufactured engine by either obtaining your own certificate of conformity as specified in subpart C of this part or by having a certifying remanufacturer include your engine under its certificate of conformity. In either case, your remanufactured engine must be covered by a certificate before it is reintroduced into service.

(e) Contact a certifying remanufacturer to have your engine included under its certificate of conformity. You must comply with the certificate holder's emission-related installation instructions.

§ 1042.815 Demonstrating availability.

(a) A certified remanufacturing system is considered to be available for a specific engine only if EPA has certified the remanufacturing system as being in compliance with the provisions of this part and the certificate holder has demonstrated during certification that the system meets the criteria of this paragraph (a). We may issue a certificate for a remanufacturing system that does not meet these criteria, but such systems would not be considered available.

(1) The engine configuration must be included in the engine family for the remanufacturing system.

(2) The total marginal cost of the remanufacturing system, as calculated under paragraph (c) of this section, must be less than $45,000 per ton of PM reduction.

(3) It must be possible to obtain and install the remanufacturing system in a timely manner consistent with normal remanufacturing procedures. For example, a remanufacturing system would generally not be considered to be available if it required that the engine be removed from the vessel and shipped to a factory to be remanufactured.

(4) The remanufacturing system may result in increased maintenance costs, provided the incremental maintenance costs are included in the total costs. The remanufacturing system may not adversely affect engine reliability or power. Note that owner/operators may

ask us to determine that a remanufacturing system is not considered available for their vessels because of excessive costs under § 1042.850.

(b) We will maintain a list of available remanufacturing systems. A new remanufacturing system is considered to be available 120 days after we first issue a certificate of conformity for it. Where we issue a certificate of conformity based on carryover data for a system that is already considered to be available for the configuration, the 120-day delay does not apply and the new system is considered to be available when we issue the certificate.

(c) For the purpose of paragraph (a)(2) of this section, marginal cost means the difference in costs between remanufacturing the engine using the remanufacturing system and remanufacturing the engine conventionally, divided by the projected amount that PM emissions will be reduced over the engine's useful life.

(1) Total costs include:

(i) Incremental hardware costs.

(ii) Incremental labor costs.

(iii) Incremental operating costs over one useful life period.

(iv) Other costs (such as shipping).

(2) Calculate the projected amount that PM emissions will be reduced over the engine's useful life using the following equation:

$$\text{PM tons} = (EF_{base} - EF_{cont}) \times (PR) \times (UL) \times (LF) \times (10^{-6})$$

Where:

EF_{base} = deteriorated baseline PM emission rate (g/kW-hr).

EF_{cont} = deteriorated controlled PM emission rate (g/kW-hr).

PR = maximum engine power for the engine (kW).

UL = useful life (hr).

LF = the load factor that would apply for your engine under § 1042.705.

§ 1042.820 Emission standards and required emission reductions for remanufactured engines.

(a) The requirements of this section apply with respect to emissions as measured according to subpart F of this part. See paragraph (g) of this section for special provisions related to remanufacturing systems certified for both locomotive and marine engines. Remanufactured Tier 2 and earlier engines may be certified under this subpart only if they have NO_X emissions equivalent to or less than baseline NO_X levels and PM emissions at least 25.0 percent less than baseline PM emission levels. See § 1042.825 for provisions for determining baseline NO_X and PM emissions. See § 1042.835 for provisions related to demonstrating compliance with these requirements.

(b) The NTE and ABT provisions of this part do not apply for remanufactured engines.

(c) The exhaust emission standards in this section apply for engines using the fuel type on which the engines in the engine family are designed to operate. Engines designed to operate using residual fuel must comply with the standards and requirements of this part when operated using residual fuel.

(d) Your engines must meet the exhaust emission standards of this section over their full useful life, as defined in § 1042.101(e).

(e) The duty-cycle emission standards in this subpart apply to all testing performed according to the procedures in § 1042.505, including certification, production-line, and in-use testing.

(f) Sections 1042.120, 1042.125, 1042.130, 1042.140 apply for remanufactured engines as written. Section 1042.115 applies for remanufactured engines as written, except for the requirement that electronically controlled engines broadcast their speed and output shaft torque.

(g) A remanufacturing system certified for locomotive engines under 40 CFR part 1033 may be deemed to also meet the requirements of this section, as specified in § 1042.836.

§ 1042.825 Baseline determination.

(a) For the purpose of this subpart, the term ''baseline emissions'' means the average measured emission rate specified by this section. Baseline emissions are specific to a given certificate holder and a given engine configuration.

(b) Select a used engine to be the emission-data engine for the engine family for testing. Using good engineering judgment, select the engine configuration expected to represent the most common configuration in the family.

(c) Remanufacture the engine according to OEM specifications (or equivalent). The engine is considered ''the baseline engine'' at this point. If the OEM specifications include a range of adjustment for any parameter, set the parameter to the midpoint of the range. You may ask us to allow you to adjust it differently, consistent with good engineering judgment.

(d) Test the baseline engine four times according to the test procedures in subpart F of this part. The baseline emissions are the average of those four tests.

(e) We may require you to test a second engine of the same or different configuration in addition to the engine tested under this section. If we require you to test the same configuration, average the results of the testing with previous results, unless we determine that your previous results are not valid.

(f) Use good engineering judgment for all aspects of the baseline determination. We may reject your baseline if we determine that you did not use good engineering judgment, consistent with the provisions of 40 CFR 1068.5.

§ 1042.830 Labeling.

(a) At the time of remanufacture, affix a permanent and legible label identifying each engine. The label must be—

(1) Attached in one piece so it is not removable without being destroyed or defaced.

(2) Secured to a part of the engine needed for normal operation and not normally requiring replacement.

(3) Durable and readable for the engine's entire useful life.

(4) Written in English.

(b) The label must—

(1) Include the heading ''EMISSION CONTROL INFORMATION''.

(2) Include your full corporate name and trademark.

(3) Include EPA's standardized designation for the engine family.

(4) State the engine's category, displacement (in liters or L/cyl), maximum engine power (in kW), and power density (in kW/L) as needed to determine the emission standards for the engine family. You may specify displacement, maximum engine power, and power density as ranges consistent with the ranges listed in § 1042.101. See § 1042.140 for descriptions of how to specify per-cylinder displacement, maximum engine power, and power density.

(5) State: ''THIS MARINE ENGINE COMPLIES WITH 40 CFR 1042, SUBPART I, FOR [CALENDAR YEAR OF REMANUFACTURE].''.

(c) You may add information to the emission control information label to identify other emission standards that the engine meets or does not meet (such as international standards). You may also add other information to ensure that the engine will be properly maintained and used.

(d) You may ask us to approve modified labeling requirements in this section if you show that it is necessary or appropriate. We will approve your request if your alternate label is consistent with the intent of the labeling requirements of this section.

§ 1042.835 Certification of remanufactured engines.

(a) *General requirements.* See §§ 1042.201, 1042.210, 1042.220, 1042.225, 1042.250, and 1042.255 for the general requirements related to obtaining a certificate of conformity. See § 1042.836 for special certification provisions for remanufacturing systems certified for locomotive engines under 40 CFR 1033.936.

(b) *Applications.* See § 1042.840 for a description of what you must include in your application.

(c) *Engine families.* See § 1042.845 for instruction about dividing your engines into engine families.

(d) *Test data.* (1) Measure baseline emissions for the test configuration as specified in § 1042.825.

(2) Measure emissions from the test engine for your remanufacturing system according to the procedures of subpart F of this part.

(3) We may measure emissions from any of your test engines or other engines from the engine family, as follows:

(i) We may decide to do the testing at your plant or any other facility. If we do this, you must deliver the test engine to a test facility we designate.

The test engine you provide must include appropriate manifolds, aftertreatment devices, electronic control units, and other emission-related components not normally attached directly to the engine block. If we do the testing at your plant, you must schedule it as soon as possible and make available the instruments, personnel, and equipment we need.

(ii) If we measure emissions from one of your test engines, the results of that testing become the official emission results for the engine. Unless we later invalidate these data, we may decide not to consider your data in determining if your engine family meets applicable requirements.

(iii) Before we test one of your engines, we may set its adjustable parameters to any point within the specified adjustable ranges (see § 1042.115(d)).

(iv) Before we test one of your engines, we may calibrate it within normal production tolerances for anything we do not consider an adjustable parameter.

(4) You may ask to use emission data from a previous model year instead of doing new tests, but only if all the following are true:

(i) The engine family from the previous model year differs from the current engine family only with respect to model year or other characteristics unrelated to emissions. You may also ask to add a configuration subject to § 1042.225.

(ii) The emission-data engine from the previous model year remains the appropriate emission-data engine.

(iii) The data show that the emission-data engine would meet all the requirements that apply to the engine family covered by the application for certification.

(5) We may require you to test a second engine of the same or different configuration in addition to the engine tested under this section.

(6) If you use an alternate test procedure under 40 CFR 1065.10 and later testing shows that such testing does not produce results that are equivalent to the procedures specified in subpart F of this part, we may reject data you generated using the alternate procedure.

(e) *Demonstrating compliance.* (1) For purposes of certification, your engine family is considered in compliance with the emission standards in § 1042.820 if all emission-data engines representing that family have test results showing compliance with the standards and percent reductions required by that section. To compare emission levels from the emission-data engine with the applicable emission standards, apply an additive deterioration factor of 0.015 g/kW-hr to the measured emission levels for PM. Alternatively, you may test your engine as specified in § 1042.245 to develop deterioration factors that represent the deterioration expected in emissions over your engines' full useful life.

(2) Collect emission data using measurements to one more decimal place than the applicable standard. Apply the deterioration factor to the official emission result, then round the adjusted figure to the same number of decimal places as the emission standard. Compare the rounded emission levels to the emission standard for each emission-data engine.

(3) Your applicable NO_X standard for each configuration is the baseline NO_X emission rate for that configuration plus 5.0 percent (to account for test-to-test and engine-to-engine variability). Your applicable PM standard for each configuration is the baseline PM emission rate for that configuration multiplied by 0.750 plus the deterioration factor. If you choose to include configurations in your engine family for which you do not measure baseline emissions, you must demonstrate through engineering analysis that your remanufacturing system will reduce PM emissions by at least 25.0 percent for those configurations and not increase NO_X emissions.

(4) Your engine family is deemed not to comply if any emission-data engine representing that family for certification has test results showing a deteriorated emission level above an applicable emission standard for any pollutant.

(f) *Safety Evaluation.* You must exercise due diligence in ensuring that your system will not adversely affect safety or otherwise violate the prohibition of § 1042.115(e).

(g) *Compatibility Evaluation*. If you are not the original manufacturer of the engine, you must contact the original manufacturer of the engine to verify that your system is compatible with the engine. Keep records of your contact with the original manufacturer.

§ 1042.836 Marine certification of locomotive remanufacturing systems.

If you certify a Tier 0, Tier 1, or Tier 2 remanufacturing system for locomotives under 40 CFR part 1033, you may also certify the system under this part 1042, according to the provisions of this section. Note that in certain cases before 2013, locomotives may be certified under 40 CFR part 1033 to the standards of 40 CFR part 92.

(a) Include the following with your application for certification under 40 CFR part 1033 (or as an amendment to your application):

(1) A statement of your intent to use your remanufacturing system for marine engines. Include a list of marine engine models for which your system may be used.

(2) If there are significant differences in how your remanufacture system will be applied to marine engines relative to locomotives, in an engineering analysis demonstrating that your system will achieve emission reductions from marine engines similar to those from locomotives.

(3) A description of modifications needed for marine applications.

(4) A demonstration of availability as described in § 1042.815, except that the total marginal cost threshold does not apply.

(5) An unconditional statement that all the engines in the engine family comply with the requirements of this part, other referenced parts of the CFR, and the Clean Air Act.

(b) Sections 1042.835 and 1042.840 do not apply for engines certified under this section.

(c) Systems certified to the standards of 40 CFR part 92 are subject to the following restrictions:

(1) Tier 0 locomotives systems may not be used for any Category 1 engines or Tier 1 or later Category 2 engines.

(2) Where systems certified to the standards of 40 CFR part 1033 are also available for an engine, you may not use a system certified to the standards of 40 CFR part 92.

[73 37243, June 30, 2008, as amended at 73 FR 59194, Oct. 8, 2008; 75 FR 23009, Apr. 30, 2010]

§ 1042.840 Application requirements for remanufactured engines.

This section specifies the information that must be in your application, unless we ask you to include less information under § 1042.201(c). We may require you to provide additional information to evaluate your application.

(a) Describe the engine family's specifications and other basic parameters of the engine's design and emission controls. List the fuel type on which your engines are designed to operate (for example, ultra low-sulfur diesel fuel). List each distinguishable engine configuration in the engine family. For each engine configuration, list the maximum engine power and the range of values for maximum engine power resulting from production tolerances, as described in § 1042.140.

(b) Explain how the emission control system operates. Describe in detail all system components for controlling exhaust emissions, including any auxiliary emission control devices (AECDs) you add to the engine. Identify the part number of each component you describe.

(c) Summarize your cost effectiveness analysis used to demonstrate your system will meet the availability criteria of § 1042.815. Identify the maximum allowable costs for vessel modifications to meet the these criteria.

(d) Describe the engines you selected for testing and the reasons for selecting them.

(e) Describe the test equipment and procedures that you used, including the duty cycle(s) and the corresponding engine applications. Also describe any special or alternate test procedures you used.

(f) Describe how you operated the emission-data engine before testing, including the duty cycle and the number of engine operating hours used to stabilize emission levels. Explain why you selected the method of service accumulation. Describe any scheduled maintenance you did.

(g) List the specifications of the test fuel to show that it falls within the required ranges we specify in 40 CFR part 1065. See § 1042.801 if your certification is based on the use of special fuels or additives.

(h) Identify the engine family's useful life.

(i) Include the maintenance and warranty instructions you will give to the owner/operator (see §§ 1042.120 and 1042.125).

(j) Include the emission-related installation instructions you will provide if someone else installs your engines in a vessel (see § 1042.130).

(k) Describe your emission control information label (see § 1042.830).

(l) Identify the engine family's deterioration factors and describe how you developed them (see § 1042.245). Present any emission test data you used for this.

(m) State that you operated your emission-data engines as described in the application (including the test procedures, test parameters, and test fuels) to show you meet the requirements of this part.

(n) Present emission data for HC, NO_X, PM, and CO as required by § 1042.820. Show emission figures before and after applying adjustment factors for regeneration and deterioration factors for each pollutant and for each engine.

(o) Report all test results, including those from invalid tests, whether or not they were conducted according to the test procedures of subpart F of this part. If you measure CO_2, report those emission levels. We may ask you to send other information to confirm that your tests were valid under the requirements of this part and 40 CFR part 1065.

(p) Describe all adjustable operating parameters (see § 1042.115(d)), including production tolerances. Include the following in your description of each parameter:

(1) The nominal or recommended setting.

(2) The intended physically adjustable range.

(3) The limits or stops used to establish adjustable ranges.

(4) For Category 1 engines, information showing why the limits, stops, or other means of inhibiting adjustment are effective in preventing adjustment of parameters on in-use engines to settings outside your intended physically adjustable ranges.

(5) For Category 2 engines, propose a range of adjustment for each adjustable parameter, as described in § 1042.115(d). Include information showing why the limits, stops, or other means of inhibiting adjustment are effective in preventing adjustment of parameters on in-use engines to settings outside your proposed adjustable ranges.

(q) Unconditionally certify that all the engines in the engine family comply with the requirements of this part, other referenced parts of the CFR, and the Clean Air Act.

(r) Include the information required by other subparts of this part.

(s) Include other applicable information, such as information specified in this part or 40 CFR part 1068 related to requests for exemptions.

(t) Name an agent for service located in the United States. Service on this agent constitutes service on you or any of your officers or employees for any action by EPA or otherwise by the United States related to the requirements of this part.

(u) If you are not the original manufacturer of the engine, include a summary of your contact with the original manufacturer of the engine and provide to us any documentation provided to you by the original manufacturer.

§ 1042.845 Remanufactured engine families.

(a) For purposes of certification, divide your product line into families of engines that are expected to have similar emission characteristics throughout the useful life as described in this section. You may not group Category 1 and Category 2 engines in the same family.

(b) In general, group engines in the same engine family if they are the same in all the following aspects:

(1) The combustion cycle and fuel (the fuels with which the engine is intended or designed to be operated).

(2) The cooling system (for example, raw-water vs. separate-circuit cooling).

(3) Method of air aspiration.

(4) Method of exhaust aftertreatment (for example, catalytic converter or particulate trap).

(5) Combustion chamber design.

(6) Nominal bore and stroke.

(7) Method of control for engine operation other than governing (i.e., mechanical or electronic).

(8) Original engine manufacturer.

(c) Alternatively, you may ask us to allow you to include other engine configurations in your engine family, consistent with good engineering judgment.

(d) Do not include in your family any configurations for which good engineering judgment indicates that your emission controls are unlikely to provide PM emission reductions similar to the configuration(s) tested.

§ 1042.850 Exemptions and hardship relief.

This section describes exemption and hardship provisions that are available for owner/operators of engine subject to the provisions of this subpart.

(a) Vessels owned and operated by entities that meet the size criterion of this paragraph (a) are exempt from the requirements of this subpart I. To be exempt, your gross annual revenue for the calendar year before the remanufacture must be less than $5,000,000 in 2008 dollars or the equivalent value for future years based on the Bureau of Labor Statistics' Producer Price Index (see *www.bls.gov*). Include all revenues from any parent company and its subsidiaries. The exemption applies only for years in which you meet this criterion.

(b) In unusual circumstances, we may exempt you from an otherwise applicable requirement that you apply a certified remanufacturing system when remanufacturing your marine engine.

(1) To be eligible, you must demonstrate that all of the following are true:

(i) Unusual circumstances prevent you from meeting requirements from this chapter.

(ii) You have taken all reasonable steps to minimize the extent of the nonconformity.

(iii) Not having the exemption will jeopardize the solvency of your company.

(iv) No other allowances are available under the regulations in this chapter to avoid the impending violation.

(2) Send the Designated Compliance Officer a written request for an exemption before you are in violation.

(3) We may impose other conditions, including provisions to use an engine meeting less stringent emission standards or to recover the lost environmental benefit.

(4) In determining whether to grant the exemptions, we will consider all relevant factors, including the following:

(i) The number of engines to be exempted.

(ii) The size of your company and your ability to endure the hardship.

(iii) The length of time a vessel is expected to remain in service.

(c) If you believe that a remanufacturing system that we identified as being available cannot be installed without significant modification of your vessel, you may ask us to determine that a remanufacturing system is not considered available for your vessel because the cost would exceed the total marginal cost threshold in § 1042.815(a)(2).

(d) Other exemptions specified in subpart G of this part and 40 CFR part 1068, subparts C and D also apply to remanufactured engines. For example, the national security exemption applies to remanufactured engines as described in § 1042.635.

[73 37243, June 30, 2008, as amended at 74 FR 8426, Feb. 24, 2009; 75 FR 23009, Apr. 30, 2010]

Subpart J—Definitions and Other Reference Information

§ 1042.901 Definitions.

The following definitions apply to this part. The definitions apply to all subparts unless we note otherwise. All undefined terms have the meaning the Clean Air Act gives to them. The definitions follow:

Adjustable parameter means any device, system, or element of design that someone can adjust (including those which are difficult to access) and that,

if adjusted, may affect emissions or engine performance during emission testing or normal in-use operation. This includes, but is not limited to, parameters related to injection timing and fueling rate. You may ask us to exclude a parameter that is difficult to access if it cannot be adjusted to affect emissions without significantly degrading engine performance, or if you otherwise show us that it will not be adjusted in a way that affects emissions during in-use operation.

Aftertreatment means relating to a catalytic converter, particulate filter, or any other system, component, or technology mounted downstream of the exhaust valve (or exhaust port) whose design function is to decrease emissions in the engine exhaust before it is exhausted to the environment. Exhaust-gas recirculation and turbochargers are not aftertreatment.

Alcohol-fueled engine means an engine that is designed to run using an alcohol fuel. For purposes of this definition, alcohol fuels do not include fuels with a nominal alcohol content below 25 percent by volume.

Amphibious vehicle means a vehicle with wheels or tracks that is designed primarily for operation on land and secondarily for operation in water.

2008 Annex VI means MARPOL Annex VI, which is an annex to the International Convention on the Prevention of Pollution from Ships, 1973, as modified by the protocol of 1978 relating thereto (incorporated by reference in § 1042.910).

Applicable emission standard or *applicable standard* means an emission standard to which an engine is subject; or, where an engine has been or is being certified to another standard or FEL, applicable emission standards means the FEL and other standards to which the engine has been or is being certified. This definition does not apply to subpart H of this part.

Auxiliary emission control device means any element of design that senses temperature, vessel speed, engine RPM, transmission gear, or any other parameter for the purpose of activating, modulating, delaying, or deactivating the operation of any part of the emission control system.

Base engine means a land-based engine to be marinized, as configured prior to marinization.

Baseline emissions has the meaning given in § 1042.825.

Brake power means the usable power output of the engine, not including power required to fuel, lubricate, or heat the engine, circulate coolant to the engine, or to operate aftertreatment devices.

Calibration means the set of specifications and tolerances specific to a particular design, version, or application of a component or assembly capable of functionally describing its operation over its working range.

Carryover means relating to certification based on emission data generated from an earlier model year as described in § 1042.235(d).

Category 1 means relating to a marine engine with specific engine displacement below 7.0 liters per cylinder. *See* § 1042.670 to determine equivalent per-cylinder displacement for nonreciprocating marine engines (such as gas turbine engines).

Category 2 means relating to a marine engine with a specific engine displacement at or above 7.0 liters per cylinder but less than 30.0 liters per cylinder. *See* § 1042.670 to determine equivalent per-cylinder displacement for nonreciprocating marine engines (such as gas turbine engines).

Category 3 means relating to a reciprocating marine engine with a specific engine displacement at or above 30.0 liters per cylinder.

Certification means relating to the process of obtaining a certificate of conformity for an engine family that complies with the emission standards and requirements in this part.

Certified emission level means the highest deteriorated emission level in an engine family for a given pollutant from either transient or steady-state testing.

Clean Air Act means the Clean Air Act, as amended, 42 U.S.C. 7401–7671q.

Commercial means relating to an engine or vessel that is not a recreational marine engine or a recreational vessel.

Compression-ignition means relating to a type of reciprocating, internal-combustion engine that is not a spark-ignition engine. Note that certain

other marine engines (such as those powered by natural gas with maximum engine power at or above 250 kW) are deemed to be compression-ignition engines in § 1042.1.

Constant-speed engine means an engine whose certification is limited to constant-speed operation. Engines whose constant-speed governor function is removed or disabled are no longer constant-speed engines.

Constant-speed operation has the meaning given in 40 CFR 1065.1001.

Crankcase emissions means airborne substances emitted to the atmosphere from any part of the engine crankcase's ventilation or lubrication systems. The crankcase is the housing for the crankshaft and other related internal parts.

Critical emission-related component means any of the following components:

(1) Electronic control units, aftertreatment devices, fuel-metering components, EGR-system components, crankcase-ventilation valves, all components related to charge-air compression and cooling, and all sensors and actuators associated with any of these components.

(2) Any other component whose primary purpose is to reduce emissions.

Date of manufacture has the meaning given in 40 CFR 1068.30.

Days means calendar days, unless otherwise specified. For example, where we specify working days, we mean calendar days excluding weekends and U.S. national holidays.

Designated Compliance Officer means the Manager, Heavy-Duty and Nonroad Engine Group (6403-J), U.S. Environmental Protection Agency, 1200 Pennsylvania Ave., NW., Washington, DC 20460.

Deteriorated emission level means the emission level that results from applying the appropriate deterioration factor to the official emission result of the emission-data engine.

Deterioration factor means the relationship between emissions at the end of useful life and emissions at the low-hour test point (*see* §§ 1042.240 and 1042.245), expressed in one of the following ways:

(1) For multiplicative deterioration factors, the ratio of emissions at the end of useful life to emissions at the low-hour test point.

(2) For additive deterioration factors, the difference between emissions at the end of useful life and emissions at the low-hour test point.

Diesel fuel has the meaning given in 40 CFR 80.2. This generally includes No. 1 and No. 2 petroleum diesel fuels and biodiesel fuels.

Discrete-mode means relating to the discrete-mode type of steady-state test described in § 1042.505.

ECA associated area has the meaning given in 40 CFR 1043.20.

Emission control area (ECA) has the meaning given in 40 CFR 1043.20.

Emission control system means any device, system, or element of design that controls or reduces the emissions of regulated pollutants from an engine.

Emission-data engine means an engine that is tested for certification. This includes engines tested to establish deterioration factors.

Emission-related maintenance means maintenance that substantially affects emissions or is likely to substantially affect emission deterioration.

Engine has the meaning given in 40 CFR 1068.30. This includes complete and partially complete engines.

Engine configuration means a unique combination of engine hardware and calibration within an engine family. Engines within a single engine configuration differ only with respect to normal production variability or factors unrelated to emissions.

Engine family has the meaning given in § 1042.230.

Engine manufacturer means a manufacturer of an engine. See the definition of ''manufacturer'' in this section.

Engineering analysis means a summary of scientific and/or engineering principles and facts that support a conclusion made by a manufacturer, with respect to compliance with the provisions of this part.

Excluded means relating to an engine that either:

(1) Has been determined not to be a nonroad engine, as specified in 40 CFR 1068.30; or

(2) Is a nonroad engine that, according to § 1042.5, is not subject to this part 1042.

Exempted has the meaning given in 40 CFR 1068.30.

Exhaust-gas recirculation means a technology that reduces emissions by routing exhaust gases that had been exhausted from the combustion chamber(s) back into the engine to be mixed with incoming air before or during combustion. The use of valve timing to increase the amount of residual exhaust gas in the combustion chamber(s) that is mixed with incoming air before or during combustion is not considered exhaust-gas recirculation for the purposes of this part.

Family emission limit (FEL) means an emission level declared by the manufacturer to serve in place of an otherwise applicable emission standard under the ABT program in subpart H of this part. The family emission limit must be expressed to the same number of decimal places as the emission standard it replaces. The family emission limit serves as the emission standard for the engine family with respect to all required testing.

Freshly manufactured marine engine means a marine engine that has not been placed into service. An engine becomes freshly manufactured when it is originally manufactured. *See* the definition of ''New marine engine'' for provisions that specify that certain other types of new engines are treated as freshly manufactured engines.

Foreign vessel means a vessel of foreign registry or a vessel operated under the authority of a country other than the United States.

Fuel system means all components involved in transporting, metering, and mixing the fuel from the fuel tank to the combustion chamber(s), including the fuel tank, fuel tank cap, fuel pump, fuel filters, fuel lines, carburetor or fuel-injection components, and all fuel-system vents.

Fuel type means a general category of fuels such as gasoline, diesel fuel, residual fuel, or natural gas. There can be multiple grades within a single fuel type, such as high-sulfur or low-sulfur diesel fuel.

Gas turbine engine has the meaning given in 40 CFR 1068.30. In general, this means anything commercially known as a gas turbine engine. It does not include external combustion steam engines.

Good engineering judgment has the meaning given in 40 CFR 1068.30. See 40 CFR 1068.5 for the administrative process we use to evaluate good engineering judgment.

Green Engine Factor means a factor that is applied to emission measurements from a Category 2 engine that has had little or no service accumulation. The Green Engine Factor adjusts emission measurements to be equivalent to emission measurements from an engine that has had approximately 300 hours of use.

High-sulfur diesel fuel means one of the following:

(1) For in-use fuels, *high-sulfur diesel fuel* means a diesel fuel with a maximum sulfur concentration above 500 parts per million.

(2) For testing, *high-sulfur diesel fuel* has the meaning given in 40 CFR part 1065.

Hydrocarbon (HC) means the hydrocarbon group on which the emission standards are based for each fuel type, as described in §1042.101(d) and §1042.104(a).

Identification number means a unique specification (for example, a model number/serial number combination) that allows someone to distinguish a particular engine from other similar engines.

Low-hour means relating to an engine that has stabilized emissions and represents the undeteriorated emission level. This would generally involve less than 125 hours of operation for engines below 560 kW and less than 300 hours for engines at or above 560 kW.

Low-sulfur diesel fuel means one of the following:

(1) For in-use fuels, *low-sulfur diesel fuel* means a diesel fuel market as low-sulfur diesel fuel having a maximum sulfur concentration of 500 parts per million.

(2) For testing, *low-sulfur diesel fuel* has the meaning given in 40 CFR part 1065.

Manufacture means the physical and engineering process of designing, constructing, and assembling an engine or a vessel, or modifying or operating an engine or vessel in a way that makes it

a new marine engine or new marine vessel.

Manufacturer means any person who manufactures (*see* definition of ''manufacture'' in this section) a new engine or vessel or imports such engines or vessels for resale. All manufacturing entities under the control of the same person are considered to be a single manufacturer.

(1) This term includes, but is not limited to:

(i) Any person who manufactures an engine or vessel for sale in the United States or otherwise introduces a new marine engine into U.S. commerce.

(ii) Importers who import engines or vessels for resale.

(iii) Post-manufacture marinizers.

(iv) Vessel owners/operators that reflag a formerly foreign vessel as a U.S.-flagged vessel.

(v) Any person who modifies or operates an engine or vessel in a way that makes it a new marine engine or new marine vessel.

(2) Dealers that do not cause an engine or vessel to become new are not manufacturers.

Marine engine means a nonroad engine that is installed or intended to be installed on a marine vessel. This includes a portable auxiliary marine engine only if its fueling, cooling, or exhaust system is an integral part of the vessel. A fueling system is considered integral to the vessel only if one or more essential elements are permanently affixed to the vessel. There are two kinds of marine engines:

(1) Propulsion marine engine means a marine engine that moves a vessel through the water or directs the vessel's movement.

(2) Auxiliary marine engine means a marine engine not used for propulsion.

Marine vessel has the meaning given in 1 U.S.C. 3, except that it does not include amphibious vehicles. The definition in 1 U.S.C. 3 very broadly includes every craft capable of being used as a means of transportation on water.

Maximum engine power has the meaning given in § 1042.140.

Maximum in-use engine speed has the meaning given in § 1042.140.

Maximum test power means the power output observed at the maximum test speed with the maximum fueling rate possible.

Maximum test speed has the meaning given in 40 CFR 1065.1001.

Maximum test torque has the meaning given in 40 CFR 1065.1001.

Model year means any of the following:

(1) For freshly manufactured marine engines (*see* definition of ''new marine engine,'' paragraph (1)), model year means one of the following:

(i) Calendar year.

(ii) Your annual new model production period if it is different than the calendar year. This must include January 1 of the calendar year for which the model year is named. It may not begin before January 2 of the previous calendar year and it must end by December 31 of the named calendar year. For seasonal production periods not including January 1, model year means the calendar year in which the production occurs, unless you choose to certify the applicable engine family with the following model year. For example, if your production period is June 1, 2010 through November 30, 2010, your model year would be 2010 unless you choose to certify the engine family for model year 2011.

(2) For an engine that is converted to a marine engine after being certified and placed into service as a motor vehicle engine, a nonroad engine that is not a marine engine, or a stationary engine, model year means the calendar year in which the engine was originally produced. For an engine that is converted to a marine engine after being placed into service as a motor vehicle engine, a nonroad engine that is not a marine engine, or a stationary engine without having been certified, model year means the calendar year in which the engine becomes a new marine engine. (*See* definition of ''new marine engine,'' paragraph (2)).

(3) For an uncertified marine engine excluded under § 1042.5 that is later subject to this part 1042 as a result of being installed in a different vessel, model year means the calendar year in which the engine was installed in the non-excluded vessel. For a marine engine excluded under § 1042.5 that is later subject to this part 1042 as a result of reflagging the vessel, model

year means the calendar year in which the engine was originally manufactured. For a marine engine that become new under paragraph (7) of the definition of ''new marine engine,'' model year means the calendar year in which the engine was originally manufactured. (*See* definition of ''new marine engine,'' paragraphs (3) and (7)).

(4) For engines that do not meet the definition of ''freshly manufactured'' but are installed in new vessels, model year means the calendar year in which the engine is installed in the new vessel. (*See* definition of ''new marine engine,'' paragraph (4)).

(5) For remanufactured engines, model year means the calendar year in which the remanufacture takes place.

(6) For imported engines:

(i) For imported engines described in paragraph (5)(i) of the definition of ''new marine engine,'' *model year* has the meaning given in paragraphs (1) through (4) of this definition.

(ii) For imported engines described in paragraph (5)(ii) of the definition of ''new marine engine,'' *model year* means the calendar year in which the engine is remanufactured.

(iii) For imported engines described in paragraph (5)(iii) of the definition of ''new marine engine,'' *model year* means the calendar year in which the engine is first assembled in its imported configuration, unless specified otherwise in this part or in 40 CFR part 1068.

(iv) For imported engines described in paragraph (5)(iv) of the definition of ''new marine engine,'' *model year* means the calendar year in which the engine is imported.

(7) [Reserved]

(8) For freshly manufactured vessels, model year means the calendar year in which the keel is laid or the vessel is at a similar stage of construction. For vessels that become new under paragraph (2) of the definition of ''new vessel'' (as a result of modifications), model year means the calendar year in which the modifications physically begin.

Motor vehicle has the meaning given in 40 CFR 85.1703(a).

New marine engine means any of the following:

(1) A freshly manufactured marine engine for which the ultimate purchaser has never received the equitable or legal title. This kind of engine might commonly be thought of as ''brand new.'' In the case of this paragraph (1), the engine is new from the time it is produced until the ultimate purchaser receives the title or the product is placed into service, whichever comes first.

(2) An engine originally manufactured as a motor vehicle engine, a nonroad engine that is not a marine engine, or a stationary engine that is later used or intended to be used as a marine engine. In this case, the engine is no longer a motor vehicle, nonmarine, or stationary engine and becomes a ''new marine engine.'' The engine is no longer new when it is placed into marine service as a marine engine. This paragraph (2) applies for engines we exclude under §1042.5, where that engine is later installed as a marine engine in a vessel that is covered by this part 1042. For example, this would apply to an engine that is no longer used in a foreign vessel. An engine converted to a marine engine without having been certified is treated as a freshly manufactured engine under this part 1042.

(3) A marine engine that has been previously placed into service in an application we exclude under §1042.5, where that engine is installed in a vessel that is covered by this part 1042. The engine is new when it first enters U.S. waters on a vessel covered by this part 1042. For example, this would apply to an engine that is no longer used in a foreign vessel and for engines on a vessel that is reflagged as a U.S. vessel. Note paragraph (7) of this definition may also apply.

(4) An engine not covered by paragraphs (1) through (3) of this definition that is intended to be installed in a new vessel. This generally includes installation of used engines in new vessels. The engine is no longer new when the ultimate purchaser receives a title for the vessel or it is placed into service, whichever comes first. Such an engine is treated as a freshly manufactured engine under this part 1042, whether or not it meets the definition of ''freshly manufactured marine engine.''

(5) A remanufactured marine engine. An engine becomes new when it is remanufactured (as defined in this section) and ceases to be new when placed back into service.

(6) An imported marine engine, subject to the following provisions:

(i) An imported marine engine covered by a certificate of conformity issued under this part that meets the criteria of one or more of paragraphs (1) through (4) of this definition, where the original engine manufacturer holds the certificate, is new as defined by those applicable paragraphs.

(ii) An imported remanufactured engine that would have been required to be certified if it had been remanufactured in the United States.

(iii) An imported engine that will be covered by a certificate of conformity issued under this part, where someone other than the original engine manufacturer holds the certificate (such as when the engine is modified after its initial assembly), is a new marine engine when it is imported. It is no longer new when the ultimate purchaser receives a title for the engine or it is placed into service, whichever comes first.

(iv) An imported marine engine that is not covered by a certificate of conformity issued under this part at the time of importation is new, but only if it was produced on or after the dates shown in the following table. This addresses uncertified engines and vessels initially placed into service that someone seeks to import into the United States. Importation of this kind of engine (or vessel containing such an engine) is generally prohibited by 40 CFR part 1068.

APPLICABILITY OF EMISSION STANDARDS FOR COMPRESSION-IGNITION MARINE ENGINES

Engine category and type	Power (kW)	Per-cylinder displacement (L/cyl)	Initial model year of emission standards
Category 1	P < 19	All	2000
Category 1	19 ≤ P < 37	All	1999
Category 1, Recreational	P ≥ 37	disp. < 0.9	2007
Category 1, Recreational	All	0.9 ≤ disp. < 2.5	2006
Category 1, Recreational	All	disp. ≥ 2.5	2004
Category 1, Commercial	P ≥ 37	disp. < 0.9	2005
Category 1, Commercial	All	disp. ≥ 0.9	2004
Category 2 and Category 3	All	disp. ≥ 5.0	2004

(7) A marine engine that is not covered by a certificate of conformity issued under this part on a U.S.-flag vessel entering U.S. waters is new, but only if it was produced on or after the dates identified in paragraph (6)(iv) of this definition. Such entrance is deemed to be introduction into U.S. commerce.

New vessel means any of the following:

(1) A vessel for which the ultimate purchaser has never received the equitable or legal title. The vessel is no longer new when the ultimate purchaser receives this title or it is placed into service, whichever comes first.

(2) For vessels with no Category 3 engines, a vessel that has been modified such that the value of the modifications exceeds 50 percent of the value of the modified vessel, excluding temporary modifications (as defined in this section). The value of the modification is the difference in the assessed value of the vessel before the modification and the assessed value of the vessel after the modification. The vessel is no longer new when it is placed into service. Use the following equation to determine if the fractional value of the modification exceeds 50 percent:

Percent of value = [(Value after modification) − (Value before modification)] × 100% ÷ (Value after modification)

(3) For vessels with Category 3 engines, a vessel that has undergone a modification that substantially alters the dimensions or carrying capacity of the vessel, changes the type of vessel, or substantially prolongs the vessel's life.

(4) An imported vessel that has already been placed into service, where it has an engine not covered by a certificate of conformity issued under this part at the time of importation that was manufactured after the requirements of this part start to apply (see § 1042.1).

Noncompliant engine means an engine that was originally covered by a certificate of conformity but is not in the certified configuration or otherwise does not comply with the conditions of the certificate.

Nonconforming engine means an engine not covered by a certificate of conformity that would otherwise be subject to emission standards.

Nonmethane hydrocarbon has the meaning given in 40 CFR 1065.1001. This generally means the difference between the emitted mass of total hydrocarbons and the emitted mass of methane.

Nonroad means relating to nonroad engines, or vessels, or equipment that include nonroad engines.

Nonroad engine has the meaning given in 40 CFR 1068.30. In general, this means all internal-combustion engines except motor vehicle engines, stationary engines, engines used solely for competition, or engines used in aircraft.

NO_X Technical Code means the ''Technical Code on Control of Emission of Nitrogen Oxides from Marine Diesel Engines'' adopted by the International Maritime Organization (incorporated by reference in § 1042.910). The Technical Code is part of 2008 Annex VI.

Official emission result means the measured emission rate for an emission-data engine on a given duty cycle before the application of any deterioration factor, but after the applicability of regeneration adjustment factors.

Operator demand has the meaning given in 40 CFR 1065.1001.

Owners manual means a document or collection of documents prepared by the engine manufacturer for the owner or operator to describe appropriate engine maintenance, applicable warranties, and any other information related to operating or keeping the engine. The owners manual is typically provided to the ultimate purchaser at the time of sale. The owners manual may be in paper or electronic format.

Oxides of nitrogen has the meaning given in 40 CFR 1065.1001.

Particulate trap means a filtering device that is designed to physically trap particulate matter above a certain size.

Passenger means a person that provides payment as a condition of boarding a vessel. This does not include the owner or any paid crew members.

Placed into service means put into initial use for its intended purpose.

Point of first retail sale means the location at which the initial retail sale occurs. This generally means a vessel dealership or manufacturing facility, but may also include an engine seller or distributor in cases where loose engines are sold to the general public for uses such as replacement engines.

Post-manufacture marinizer means an entity that produces a marine engine by modifying a non-marine engine, whether certified or uncertified, complete or partially complete, where the entity is not controlled by the manufacturer of the base engine or by an entity that also controls the manufacturer of the base engine. In addition, vessel manufacturers that substantially modify marine engines are post-manufacture marinizers. For the purpose of this definition, ''substantially modify'' means changing an engine in a way that could change engine emission characteristics.

Power density has the meaning given in § 1042.140.

Ramped-modal means relating to the ramped-modal type of steady-state test described in § 1042.505.

Rated speed means the maximum full-load governed speed for governed engines and the speed of maximum power for ungoverned engines.

Recreational marine engine means a Category 1 propulsion marine engine that is intended by the manufacturer to be installed on a recreational vessel.

Recreational vessel means a vessel that is intended by the vessel manufacturer to be operated primarily for pleasure or leased, rented or chartered to another for the latter's pleasure. However, this does not include the following vessels:

(1) Vessels below 100 gross tons that carry more than 6 passengers.

(2) Vessels at or above 100 gross tons that carry one or more passengers.

(3) Vessels used solely for competition (see § 1042.620).

Reflag means to register as a U.S. vessel any vessel that previously had a foreign registry or had been placed into service without registration.

Remanufacture means to replace every cylinder liner in a commercial engine with maximum engine power at or above 600 kW, whether during a single maintenance event or cumulatively within a five-year period. For the purpose of this definition, ''replace'' includes removing, inspecting, and requalifying a liner. Rebuilding a recreational engine or an engine with maximum engine power below 600 kW is not remanufacturing.

Remanufacture system or *remanufacturing system* means all components (or specifications for components) and instructions necessary to remanufacture an engine in accordance with applicable requirements of this part 1042.

Remanufacturer has the meaning given to ''manufacturer'' in section 216(1) of the Clean Air Act (42 U.S.C. 7550(1)) with respect to remanufactured marine engines. This term includes any person that is engaged in the manufacture or assembly of remanufactured engines, such as persons who:

(1) Design or produce the emission-related parts used in remanufacturing.

(2) Install parts in or on an existing engine to remanufacture it.

(3) Own or operate the engine and provide specifications as to how an engine is to be remanufactured (i.e., specifying who will perform the work, when the work is to be performed, what parts are to be used, or how to calibrate the adjustable parameters of the engine).

Residual fuel means any fuel with a T_{90} greater than 700 °F as measured with the distillation test method specified in 40 CFR 1065.1010. This generally includes all RM grades of marine fuel without regard to whether they are known commercially as residual fuel. For example, fuel marketed as intermediate fuel may be residual fuel.

Revoke has the meaning given in 40 CFR 1068.30. In general this means to terminate the certificate or an exemption for an engine family.

Round has the meaning given in 40 CFR 1065.1001.

Scheduled maintenance means adjusting, repairing, removing, disassembling, cleaning, or replacing components or systems periodically to keep a part or system from failing, malfunctioning, or wearing prematurely. It also may mean actions you expect are necessary to correct an overt indication of failure or malfunction for which periodic maintenance is not appropriate.

Small-volume boat builder means a boat manufacturer with fewer than 500 employees and with annual worldwide production of fewer than 100 boats. For manufacturers owned by a parent company, these limits apply to the combined production and number of employees of the parent company and all its subsidiaries. Manufacturers that produce vessels with Category 3 engines are not small-volume boat builders.

Small-volume engine manufacturer means a manufacturer of Category 1 and/or Category 2 engines with annual worldwide production of fewer than 1,000 internal combustion engines (marine and nonmarine). For manufacturers owned by a parent company, the limit applies to the production of the parent company and all its subsidiaries. Manufacturers that certify or produce any Category 3 engines are not small-volume engine manufacturers.

Spark-ignition means relating to a gasoline-fueled engine or any other type of engine with a spark plug (or other sparking device) and with operating characteristics significantly similar to the theoretical Otto combustion cycle. Spark-ignition engines usually use a throttle to regulate intake air flow to control power during normal operation.

Specified adjustable range means a range of adjustment for an adjustable parameter that is approved as part of certification. Note that Category 1 engines must comply with emission standards over the full physically adjustable range for any adjustable parameters.

Steady-state has the meaning given in 40 CFR 1065.1001.

Sulfur-sensitive technology means an emission control technology that experiences a significant drop in emission control performance or emission-system durability when an engine is operated on low-sulfur fuel (i.e., fuel with a sulfur concentration of 300 to 500 ppm) as compared to when it is operated on ultra low-sulfur fuel (i.e., fuel with a sulfur concentration less than 15 ppm). Exhaust-gas recirculation is not a sulfur-sensitive technology.

Suspend has the meaning given in 40 CFR 1068.30. In general this means to temporarily discontinue the certificate or an exemption for an engine family.

Temporary modification means a modification to a vessel based on a written contract for marine services such that the modifications will be removed from the vessel when the contract expires. This provision is intended to address short-term contracts that would generally be less than 12 months in duration. You may ask us to consider modifications that will be in place longer than 12 months as temporary modifications.

Test engine means an engine in a test sample.

Test sample means the collection of engines selected from the population of an engine family for emission testing. This may include testing for certification, production-line testing, or in-use testing.

Tier 1 means relating to the Tier 1 emission standards, as shown in Appendix I.

Tier 2 means relating to the Tier 2 emission standards, as shown in § 1042.104 and Appendix I.

Tier 3 means relating to the Tier 3 emission standards, as shown in § 1042.101 and § 1042.104.

Tier 4 means relating to the Tier 4 emission standards, as shown in § 1042.101.

Total hydrocarbon has the meaning given in 40 CFR 1065.1001. This generally means the combined mass of organic compounds measured by the specified procedure for measuring total hydrocarbon, expressed as a hydrocarbon with an atomic hydrogen-to-carbon ratio of 1.85:1.

Total hydrocarbon equivalent has the meaning given in 40 CFR 1065.1001. This generally means the sum of the carbon mass contributions of non-oxygenated hydrocarbons, alcohols and aldehydes, or other organic compounds that are measured separately as contained in a gas sample, expressed as exhaust hydrocarbon from petroleum-fueled engines. The atomic hydrogen-to-carbon ratio of the equivalent hydrocarbon is 1.85:1.

Ultimate purchaser means, with respect to any new vessel or new marine engine, the first person who in good faith purchases such new vessel or new marine engine for purposes other than resale.

Ultra low-sulfur diesel fuel means one of the following:

(1) For in-use fuels, *ultra low-sulfur diesel fuel* means a diesel fuel marketed as ultra low-sulfur diesel fuel having a maximum sulfur concentration of 15 parts per million.

(2) For testing, *ultra low-sulfur diesel fuel* has the meaning given in 40 CFR part 1065.

United States has the meaning given in 40 CFR 1068.30.

Upcoming model year means for an engine family the model year after the one currently in production.

U.S.-directed production volume means the number of engine units, subject to the requirements of this part, produced by a manufacturer for which the manufacturer has a reasonable assurance that sale was or will be made to ultimate purchasers in the United States.

U.S. waters includes U.S. navigable waters and the U.S. EEZ.

Useful life means the period during which the engine is designed to properly function in terms of reliability and fuel consumption, without being remanufactured, specified as a number of hours of operation or calendar years, whichever comes first. It is the period during which an engine is required to comply with all applicable emission standards. *See* §§ 1042.101(e) and 1042.104(d).

Variable-speed engine means an engine that is not a constant-speed engine.

Vessel means a marine vessel.

Vessel operator means any individual that physically operates or maintains a vessel or exercises managerial control over the operation of the vessel.

Vessel owner means the individual or company that holds legal title to a vessel.

Void has the meaning given in 40 CFR 1068.30. In general this means to invalidate a certificate or an exemption both retroactively and prospectively.

Volatile liquid fuel means any fuel other than diesel fuel or biodiesel that is a liquid at atmospheric pressure and has a Reid Vapor Pressure higher than 2.0 pounds per square inch.

We (us, our) means the Administrator of the Environmental Protection Agency and any authorized representatives.

[73 FR 37243, June 30, 2008, as amended at 75 FR 23010, Apr. 30, 2010]

§ 1042.905 Symbols, acronyms, and abbreviations.

The following symbols, acronyms, and abbreviations apply to this part:

ABT Averaging, banking, and trading.
AECD auxiliary-emission control device.
CFR Code of Federal Regulations.
CH_4 methane
CO carbon monoxide.
CO_2 carbon dioxide.
cyl cylinder.
disp. displacement.
ECA Emission Control Area.
EEZ Exclusive Economic Zone.
EPA Environmental Protection Agency.
FEL Family Emission Limit.
g grams.
HC hydrocarbon.
hr hours.
IMO International Maritime Organization.
kPa kilopascals.
kW kilowatts.
L liters.
LTR Limited Testing Region.
N_2O nitrous oxide.
NARA National Archives and Records Administration.
NMHC nonmethane hydrocarbons.
NO_X oxides of nitrogen (NO and NO_2).
NTE not-to-exceed.
PM particulate matter.
RPM revolutions per minute.
SAE Society of Automotive Engineers.
SCR selective catalytic reduction.
THC total hydrocarbon.
THCE total hydrocarbon equivalent.
ULSD ultra low-sulfur diesel fuel.
U.S.C. United States Code.

[73 37243, June 30, 2008, as amended at 74 FR 56509, Oct. 30, 2009; 75 FR 23012, Apr. 30, 2010]

§ 1042.910 Reference materials.

Documents listed in this section have been incorporated by reference into this part. The Director of the Federal Register approved the incorporation by reference as prescribed in 5 U.S.C. 552(a) and 1 CFR part 51. Anyone may inspect copies at the U.S. EPA, Air and Radiation Docket and Information Center, 1301 Constitution Ave., NW., Room B102, EPA West Building, Washington, DC 20460, (202) 566–1744, or at the National Archives and Records Administration (NARA). For information on the availability of this material at NARA, call 202–741–6030, or go to: *http://www.archives.gov/federal_register/code_of_federal_regulations/ibr_locations.html*.

(a) *IMO material*. This paragraph (a) lists material from the International Maritime Organization that we have incorporated by reference. Anyone may purchase copies of these materials from the International Maritime Organization, 4 Albert Embankment, London SE1 7SR, United Kingdom, or *http://www.imo.org*, or 44–(0)20–7735–7611.

(1) Revised MARPOL Annex VI, Regulations for the Prevention of Air Pollution from Ships, and NO_X Technical Code 2008, 2009 edition.

(i) Revised MARPOL Annex VI, Regulations for the Prevention of Pollution from Ships (''2008 Annex VI''); IBR approved for § 1042.901.

(ii) NO_X Technical Code 2008 (''NO_X Technical Code''); IBR approved for §§ 1042.104(g), 1042.230(d), 1042.302(c) and (e), 1042.501(g), and 1042.901.

(2) [Reserved]

(b) [Reserved]

[75 FR 23012, Apr. 30, 2010]

§ 1042.915 Confidential information.

(a) Clearly show what you consider confidential by marking, circling, bracketing, stamping, or some other method.

(b) We will store your confidential information as described in 40 CFR part 2. Also, we will disclose it only as specified in 40 CFR part 2. This applies both to any information you send us and to any information we collect from inspections, audits, or other site visits.

(c) If you send us a second copy without the confidential information, we will assume it contains nothing confidential whenever we need to release information from it.

(d) If you send us information without claiming it is confidential, we may make it available to the public without further notice to you, as described in 40 CFR 2.204.

§ 1042.920 Hearings.

(a) You may request a hearing under certain circumstances, as described elsewhere in this part. To do this, you must file a written request, including a description of your objection and any supporting data, within 30 days after we make a decision.

(b) For a hearing you request under the provisions of this part, we will approve your request if we find that your request raises a substantial factual issue.

(c) If we agree to hold a hearing, we will use the procedures specified in 40 CFR part 1068, subpart G.

§ 1042.925 Reporting and recordkeeping requirements.

Under the Paperwork Reduction Act (44 U.S.C. 3501 et seq.), the Office of Management and Budget approves the reporting and recordkeeping specified in the applicable regulations. The following items illustrate the kind of reporting and recordkeeping we require for engines regulated under this part:

(a) We specify the following requirements related to engine certification in this part 1042:

(1) In § 1042.135 we require engine manufacturers to keep certain records related to duplicate labels sent to vessel manufacturers.

(2) In § 1042.145 we state the requirements for interim provisions.

(3) In subpart C of this part we identify a wide range of information required to certify engines.

(4) In §§ 1042.345 and 1042.350 we specify certain records related to production-line testing.

(5) In subpart G of this part we identify several reporting and recordkeeping items for making demonstrations and getting approval related to various special compliance provisions.

(6) In §§ 1042.725, 1042.730, and 1042.735 we specify certain records related to averaging, banking, and trading.

(7) In subpart I of this part we specify certain records related to meeting requirements for remanufactured engines.

(b) We specify the following requirements related to testing in 40 CFR part 1065:

(1) In 40 CFR 1065.2 we give an overview of principles for reporting information.

(2) In 40 CFR 1065.10 and 1065.12 we specify information needs for establishing various changes to published test procedures.

(3) In 40 CFR 1065.25 we establish basic guidelines for storing test information.

(4) In 40 CFR 1065.695 we identify data that may be appropriate for collecting during testing of in-use engines using portable analyzers.

(c) We specify the following requirements related to the general compliance provisions in 40 CFR part 1068:

(1) In 40 CFR 1068.5 we establish a process for evaluating good engineering judgment related to testing and certification.

(2) In 40 CFR 1068.25 we describe general provisions related to sending and keeping information.

(3) In 40 CFR 1068.27 we require manufacturers to make engines available for our testing or inspection if we make such a request.

(4) In 40 CFR 1068.105 we require vessel manufacturers to keep certain records related to duplicate labels from engine manufacturers.

(5) In 40 CFR 1068.120 we specify recordkeeping related to rebuilding engines.

(6) In 40 CFR part 1068, subpart C, we identify several reporting and recordkeeping items for making demonstrations and getting approval related to various exemptions.

(7) In 40 CFR part 1068, subpart D, we identify several reporting and recordkeeping items for making demonstrations and getting approval related to importing engines.

(8) In 40 CFR 1068.450 and 1068.455 we specify certain records related to testing production-line engines in a selective enforcement audit.

(9) In 40 CFR 1068.501 we specify certain records related to investigating and reporting emission-related defects.

(10) In 40 CFR 1068.525 and 1068.530 we specify certain records related to recalling nonconforming engines.

APPENDIX I TO PART 1042—SUMMARY OF PREVIOUS EMISSION STANDARDS

The following standards apply to compression-ignition marine engines produced before the model years specified in §1042.1:

(a) *Engines below 37 kW.* Tier 1 and Tier 2 standards for engines below 37 kW apply as specified in 40 CFR part 89 and summarized in the following table:

TABLE 1 TO APPENDIX I—EMISSION STANDARDS FOR ENGINES BELOW 37 kW (G/kW-HR)

Rated power (kW)	Tier	Model year	NMHC + NO_X	CO	PM
kW<8	Tier 1	2000	10.5	8.0	1.0
	Tier 2	2005	7.5	8.0	0.80
8≤kW<19	Tier 1	2000	9.5	6.6	0.80
	Tier 2	2005	7.5	6.6	0.80
19≤kW<37	Tier 1	1999	9.5	5.5	0.8
	Tier 2	2004	7.5	5.5	0.6

(b) *Engines at or above 37 kW.* Tier 1 and Tier 2 standards for engines at or above 37 kW apply as specified in 40 CFR part 94 and summarized as follows:

(1) *Tier 1 standards.* NO_X emissions from model year 2004 and later engines with displacement of 2.5 or more liters per cylinder may not exceed the following values:

(i) 17.0 g/kW-hr when maximum test speed is less than 130 rpm.

(ii) $45.0 \times N^{-0.20}$ when maximum test speed is at or above 130 but below 2000 rpm, where N is the maximum test speed of the engine in revolutions per minute. Round the calculated standard to the nearest 0.1 g/kW-hr.

(ii) 9.8 g/kW-hr when maximum test speed is 2000 rpm or more.

(2) *Tier 2 primary standards.* Exhaust emissions from Category 1 engines at or above 37 kW and all Category 2 engines may not exceed the values shown in the following table:

TABLE 2 TO APPENDIX I—PRIMARY TIER 2 EMISSION STANDARDS FOR COMMERCIAL AND RECREATIONAL MARINE ENGINES AT OR ABOVE 37 kW (G/kW-HR)

Engine size liters/cylinder	Maximum engine power	Category	Model year	NO_X + THC g/kW-hr	CO g/kW-hr	PM g/kW-hr
disp. < 0.9	power ≥37 kW	Category 1 Commercial	2005	7.5	5.0	0.40
		Category 1 Recreational	2007	7.5	5.0	0.40
0.9 ≤ disp. < 1.2	All	Category 1 Commercial	2004	7.2	5.0	0.30
		Category 1 Recreational	2006	7.2	5.0	0.30
1.2 ≤ disp. < 2.5	All	Category 1 Commercial	2004	7.2	5.0	0.20
		Category 1 Recreational	2006	7.2	5.0	0.20
2.5 ≤ disp. < 5.0	All	Category 1 Commercial	2007	7.2	5.0	0.20
		Category 1 Recreational	2009	7.2	5.0	0.20
5.0 ≤ disp. < 15.0	All	Category 2	2007	7.8	5.0	0.27
15.0 ≤ disp. < 20.0	power < 3300 kW	Category 2	2007	8.7	5.0	0.50
	power ≥3300 kW	Category 2	2007	9.8	5.0	0.50
20.0 ≤ disp. < 25.0	All	Category 2	2007	9.8	5.0	0.50
25.0 ≤ disp. < 30.0	All	Category 2	2007	11	5.0	0.5

(3) *Tier 2 supplemental standards.* The not-to-exceed emission standards specified in 40 CFR 94.8(e) apply for all engines subject to the Tier 2 standards described in paragraph (b)(2) of this appendix.

[73 37243, June 30, 2008, as amended at 75 FR 23012, Apr. 30, 2010]

APPENDIX II TO PART 1042—STEADY-STATE DUTY CYCLES

(a) The following duty cycles apply as specified in §1042.505(b)(1):

(1) The following duty cycle applies for discrete-mode testing:

E3 mode No.	Engine speed [1]	Percent of maximum test power	Weighting factors
1	Maximum test speed	100	0.2

E3 mode No.	Engine speed [1]	Percent of maximum test power	Weighting factors
2	91%	75	0.5
3	80%	50	0.15
4	63%	25	0.15

[1] Speed terms are defined in 40 CFR part 1065. Percent speed values are relative to maximum test speed.

(2) The following duty cycle applies for ramped-modal testing:

RMC mode	Time in mode (seconds)	Engine speed [1, 3]	Power (percent) [2, 3]
1a Steady-state	229	Maximum test speed	100%.
1b Transition	20	Linear transition	Linear transition in torque.
2a Steady-state	166	63%	25%.
2b Transition	20	Linear transition	Linear transition in torque.
3a Steady-state	570	91%	75%.
3b Transition	20	Linear transition	Linear transition in torque.
4a Steady-state	175	80%	50%.

[1] Speed terms are defined in 40 CFR part 1065. Percent speed is relative to maximum test speed.
[2] The percent power is relative to the maximum test power.
[3] Advance from one mode to the next within a 20-second transition phase. During the transition phase, command a linear progression from the torque setting of the current mode to the torque setting of the next mode, and simultaneously command a similar linear progression for engine speed if there is a change in speed setting.

(b) The following duty cycles apply as specified in § 1042.505(b)(2):

(1) The following duty cycle applies for discrete-mode testing:

E5 mode No.	Engine speed [1]	Percent of maximum test power	Weighting factors
1	Maximum test speed	100	0.08
2	91%	75	0.13
3	80%	50	0.17
4	63%	25	0.32
5	Warm idle	0	0.3

[1] Speed terms are defined in 40 CFR part 1065. Percent speed values are relative to maximum test speed.

(2) The following duty cycle applies for ramped-modal testing:

RMC mode	Time in mode (seconds)	Engine speed [1, 3]	Power (percent) [2, 3]
1a Steady-state	167	Warm idle	0.
1b Transition	20	Linear transition	Linear transition in torque.
2a Steady-state	85	Maximum test speed	100%.
2b Transition	20	Linear transition	Linear transition in torque.
3a Steady-state	354	63%	25%.
3b Transition	20	Linear transition	Linear transition in torque.
4a Steady-state	141	91%	75%.
4b Transition	20	Linear transition	Linear transition in torque.
5a Steady-state	182	80%	50%.
5b Transition	20	Linear transition	Linear transition in torque.
6 Steady-state	171	Warm idle	0.

[1] Speed terms are defined in 40 CFR part 1065. Percent speed is relative to maximum test speed.
[2] The percent power is relative to the maximum test power.
[3] Advance from one mode to the next within a 20-second transition phase. During the transition phase, command a linear progression from the torque setting of the current mode to the torque setting of the next mode, and simultaneously command a similar linear progression for engine speed if there is a change in speed setting.

(c) The following duty cycles apply as specified in § 1042.505(b)(3):

(1) The following duty cycle applies for discrete-mode testing:

E2 mode No.	Engine speed [1]	Torque (percent) [2]	Weighting factors
1	Engine Governed	100	0.2
2	Engine Governed	75	0.5
3	Engine Governed	50	0.15

E2 mode No.	Engine speed [1]	Torque (percent) [2]	Weighting factors
4	Engine Governed	25	0.15

[1] Speed terms are defined in 40 CFR part 1065.
[2] The percent torque is relative to the maximum test torque as defined in 40 CFR part 1065.

(2) The following duty cycle applies for ramped-modal testing:

RMC mode	Time in mode (seconds)	Engine speed	Torque (percent) [1 2]
1a Steady-state	229	Engine Governed	100.
1b Transition	20	Engine Governed	Linear transition.
2a Steady-state	166	Engine Governed	25.
2b Transition	20	Engine Governed	Linear transition.
3a Steady-state	570	Engine Governed	75.
3b Transition	20	Engine Governed	Linear transition.
4a Steady-state	175	Engine Governed	50.

[1] The percent torque is relative to the maximum test torque as defined in 40 CFR part 1065.
[2] Advance from one mode to the next within a 20-second transition phase. During the transition phase, command a linear progression from the torque setting of the current mode to the torque setting of the next mode.

[73 FR 37243, June 30, 2008, as amended at 75 FR 68461, Nov. 8, 2010]

APPENDIX III TO PART 1042—NOT-TO-EXCEED ZONES

(a) The following definitions apply for this Appendix III:

(1) *Percent power* means the percentage of the maximum power achieved at Maximum Test Speed (or at Maximum Test Torque for constant-speed engines).

(2) *Percent speed* means the percentage of Maximum Test Speed.

(b) Figure 1 of this Appendix illustrates the default NTE zone for commercial marine engines certified using the duty cycle specified in §1042.505(b)(1), except for variable-speed propulsion marine engines used with controllable-pitch propellers or with electrically coupled propellers, as follows:

(1) Subzone 1 is defined by the following boundaries:

(i) Percent power $\geq 0.7 \cdot (\text{percent speed})^{2.5}$.

(ii) Percent power $\leq (\text{percent speed}/0.9)^{3.5}$.

(iii) Percent power $\geq 3.0 \cdot (100\%-\text{percent speed})$.

(2) Subzone 2 is defined by the following boundaries:

(i) Percent power $\geq 0.7 \cdot (\text{percent speed})^{2.5}$.

(ii) Percent power $\leq (\text{percent speed}/0.9)^{3.5}$.

(iii) Percent power $< 3.0 \cdot (100\% - \text{percent speed})$.

(iv) Percent speed ≥ 70 percent.

Figure 1 of Appendix III — NTE Zone and Subzones for Propeller-Law Commercial Marine Engines

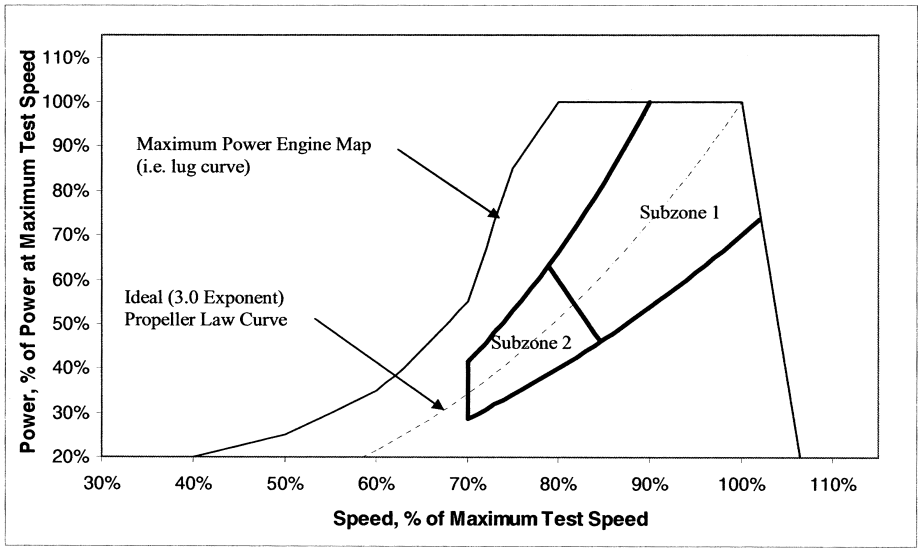

(c) Figure 2 of this Appendix illustrates the default NTE zone for recreational marine engines certified using the duty cycle specified in §1042.505(b)(2), except for variable-speed marine engines used with controllable-pitch propellers or with electrically coupled propellers, as follows:

(1) Subzone 1 is defined by the following boundaries:

(i) Percent power ≥ 0.7 · (percent speed)$^{2.5}$.

(ii) Percent power ≤ (percent speed/0.9)$^{3.5}$.

(iii) Percent power ≥ 3.0 · (100% – percent speed).

(iv) Percent power ≤ 95 percent.

(2) Subzone 2 is defined by the following boundaries:

(i) Percent power ≥ 0.7 · (percent speed)$^{2.5}$.

(ii) Percent power ≤ (percent speed/0.9)$^{3.5}$.

(iii) Percent power < 3.0 · (100% – percent speed).

(iv) Percent speed ≥ 70 percent.

(3) Subzone 3 is defined by the following boundaries:

(i) Percent power ≤ (percent speed/0.9)$^{3.5}$.

(ii) Percent power > 95 percent.

Figure 2 of Appendix III — NTE Zone and Subzones for Propeller-Law Recreational Marine Engines

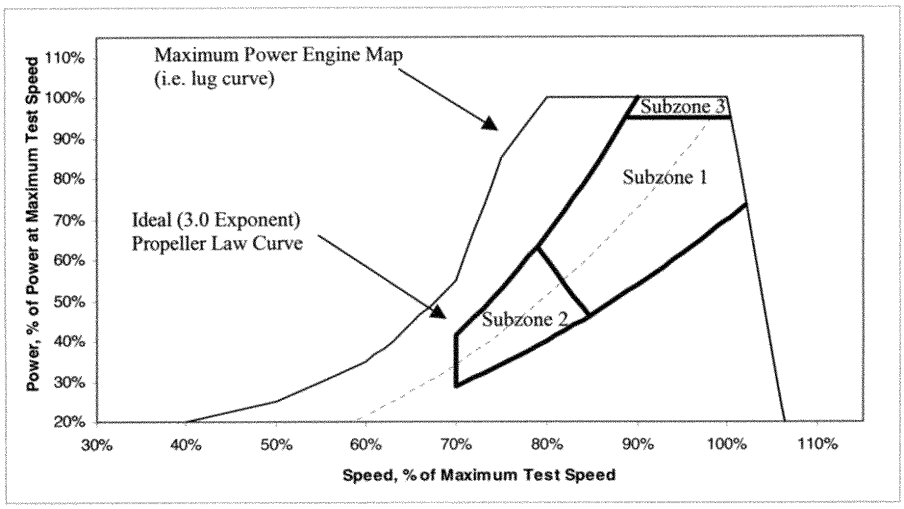

(d) Figure 3 of this Appendix illustrates the default NTE zone for variable-speed marine engines used with controllable-pitch propellers or with electrically coupled propellers that are certified using the duty cycle specified in §1042.505(b)(1), (2), or (3), as follows:

(1) Subzone 1 is defined by the following boundaries:

(i) Percent power ≥ 0.7 · (percent speed)$^{2.5}$.

(ii) Percent power ≥ 3.0 · (100% − percent speed).

(iii) Percent speed ≥ 78.9 percent.

(2) Subzone 2a is defined by the following boundaries:

(i) Percent power ≥ 0.7 · (percent speed)$^{2.5}$.

(ii) Percent speed ≥ 70 percent.

(iii) Percent speed < 78.9 percent, for Percent power > 63.3 percent.

(iv) Percent power < 3.0 · (100% − percent speed), for Percent speed ≥ 78.9 percent.

(3) Subzone 2b is defined by the following boundaries:

(i) The line formed by connecting the following two points on a plot of speed-vs.-power:

(A) Percent speed = 70 percent; Percent power = 28.7 percent.

(B) Percent speed = 40 percent at governed speed; Percent power = 40 percent.

(ii) Percent power < 0.7 · (percent speed)$^{2.5}$.

Figure 3 of Appendix III — NTE Zone and Subzones for Variable-Pitch or Electronically Coupled Engines*

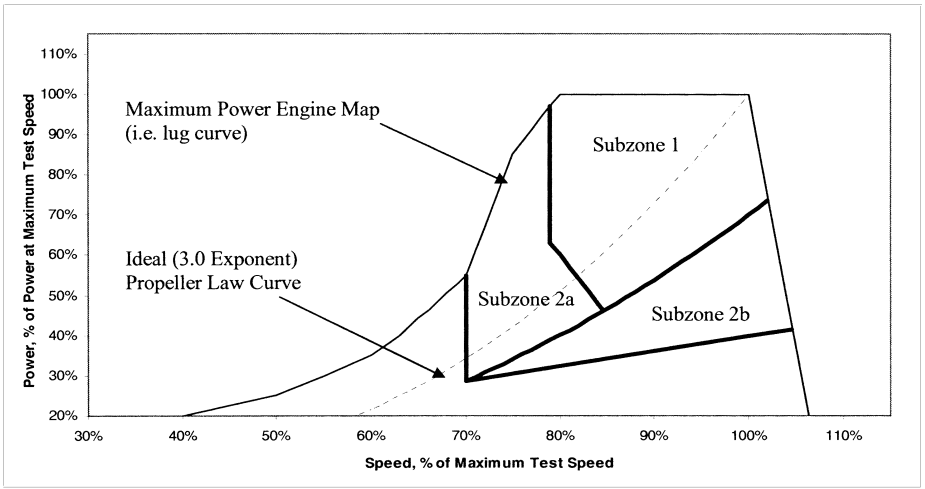

*shown for engines capable of operating on the E3 Duty Cycle

(e) Figure 4 of this Appendix illustrates the default NTE zone for constant-speed engines certified using a duty cycle specified in §1042.505(b)(3) or (b)(4), as follows:

(1) Subzone 1 is defined by the following boundaries:

(i) Percent power ≥ 70 percent.

(ii) [Reserved]

(2) Subzone 2 is defined by the following boundaries:

(i) Percent power < 70 percent.

(ii) Percent power ≥ 40 percent.

Figure 4 of Appendix III — NTE Zone and Subzones for Constant-Speed Marine Engines

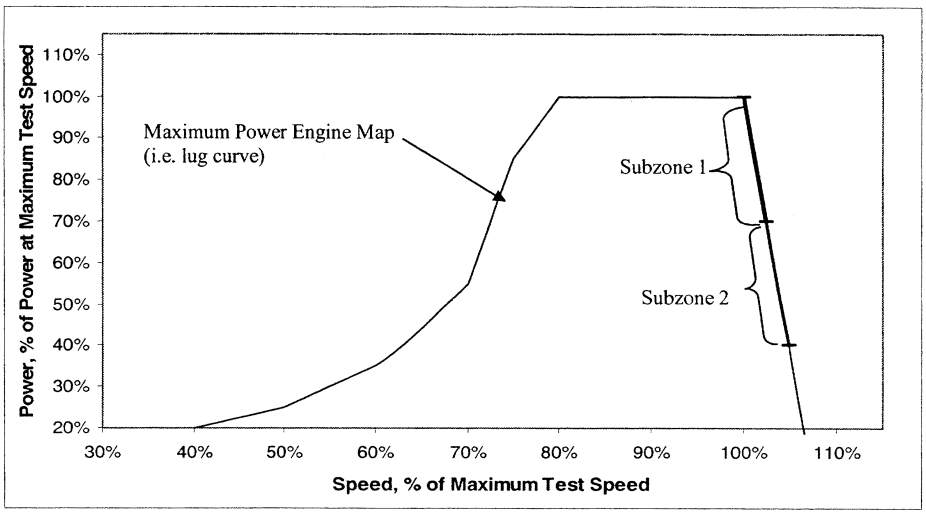

(f) Figure 5 of this Appendix illustrates the default NTE zone for variable-speed auxiliary marine engines certified using the duty cycle specified in §1042.505(b)(5)(ii) or (iii), as follows:

(1) The default NTE zone is defined by the boundaries specified in 40 CFR 86.1370–2007(b)(1) and (2).

(2) A special PM subzone is defined in 40 CFR 1039.515(b).

Figure 5 of Appendix III — NTE Zone and Subzones for

Variable-Speed Auxiliary Marine Engines (nonpropeller-law)

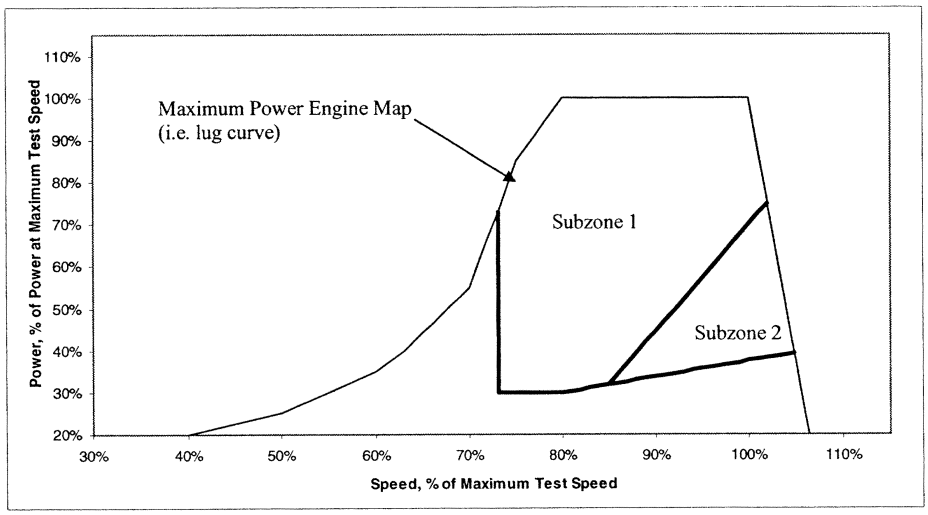

PART 1043—CONTROL OF NO_X, SO_X, AND PM EMISSIONS FROM MARINE ENGINES AND VESSELS SUBJECT TO THE MARPOL PROTOCOL

Sec.
1043.1 Overview.
1043.5 Effective dates.
1043.10 Applicability.
1043.20 Definitions.
1043.30 General obligations.
1043.40 EIAPP certificates.
1043.41 EIAPP certification process.
1043.50 Approval of methods to meet Tier 1 retrofit NO_X standards.
1043.55 Applying equivalent controls instead of complying with fuel requirements.
1043.60 Operating requirements for engines and vessels subject to this part.
1043.70 General recordkeeping and reporting requirements.
1043.80 Recordkeeping and reporting requirements for fuel suppliers.
1043.90 [RESERVED]
1043.95 Interim provisions.
1043.100 Reference materials.

AUTHORITY: 33 U.S.C. 1901–1915.

SOURCE: 75 FR 23013, Apr. 30, 2010, unless otherwise noted.

§ 1043.1 Overview.

The Act to Prevent Pollution from Ships (APPS) requires engine manufacturers, owners and operators of vessels, and other persons to comply with Annex VI of the MARPOL Protocol. This part implements portions of APPS as it relates to Regulations 13, 14 and 18 of Annex VI. These regulations clarify the application of some Annex VI provisions; provide procedures and criteria for the issuance of EIAPP certificates; and specify requirements applicable to ships that are not registered by Parties to Annex VI. This part includes provisions to apply the equivalency provisions of Regulation 4 of Annex VI with respect to Regulations 14 and 18 of Annex VI. Additional regulations may also apply with respect to the Annex VI, such as those issued separately by the U.S. Coast Guard. Note that references in this part to a specific subsection of an Annex VI regulation (such as Regulation 13.5.1) reflect the regulation numbering of the 2008 Annex VI (incorporated by reference in § 1043.100).

(a) The general requirements for non-public U.S.-flagged and other Party vessels are specified in Annex VI, as implemented by 33 U.S.C. 1901–1915. These requirements apply to engine manufacturers, owners and operators of vessels, and other persons.

(b) The provisions of this part specify how Regulations 13, 14 and 18 of Annex VI, as implemented by APPS, will be applied to U.S.-flagged vessels that operate only domestically.

(c) This part implements section 33 U.S.C. 1902(e) by specifying that non-public vessels flagged by a country that is not a party to Annex VI are subject to certain provisions under this part that are equivalent to the substantive requirements of Regulations 13, 14 and 18 of Annex VI as implemented by APPS.

(d) This part also describes where the requirements of Regulation 13.5.1 of Annex VI and Regulation 14.4 of Annex VI will apply.

(e) This part 1043 does not limit the requirements specified in Annex VI, as implemented by APPS, except as specified in § 1043.10(a)(2) and (b)(3).

(f) Nothing in this part limits the operating requirements and restrictions applicable for engines and vessels subject to 40 CFR part 1042 or the requirements and restrictions applicable for fuels subject to 40 CFR part 80.

(g) The provisions of this part specify how to obtain EIAPP certificates and certificates for Approved Methods.

§ 1043.5 Effective dates.

(a) The requirement of APPS for marine vessels to comply with Annex VI of the MARPOL Protocol is in effect.

(b) The amendments to Annex VI adopted on October 8, 2008 enter into force July 1, 2010. The requirement of APPS for marine vessels to comply with the amended Annex VI is effective July 1, 2010, although some requirements do not become applicable until later dates.

(c) Compliance with the applicable regulations of this part is required for all persons as of July 1, 2010. (Note that certain requirements begin later, as described in paragraph (d) of this section.) Note also that compliance with §§ 1043.40 and 1043.41 is required to obtain EIAPP certificates under this part whether the application is submitted before July 1, 2010 or later.

(d) Compliance with the requirements related to ECAs are effective as follows:

(1) Compliance with the ECA NO_X requirements (*see* § 1043.60(a)) is required beginning on the date on which the ECA enters into force for the United States under Annex VI.

(2) Compliance with the fuel content requirements applicable within ECAs and ECA associated areas (*see* § 1043.60(b)) is required beginning 12 months after date on which the ECA enters into force for the United States under Annex VI.

§ 1043.10 Applicability.

(a) *U.S.-flagged vessels*. The provisions of this part apply for all U.S.-flagged vessels wherever they are located (including engines installed or intended to be installed on such vessels), except as specified in this paragraph (a) or in § 1043.95.

(1) Public vessels are excluded from this part.

(2) Vessels that operate only domestically and conform to the requirements of this paragraph (a)(2) are excluded from Regulation 13 of Annex VI (including the requirement to obtain an EIAPP certificate) and the NO_X-related requirements of this part. For the purpose of this exclusion, the phrase ''operate only domestically'' means the vessels do not enter waters subject to the jurisdiction or control of any foreign country, except for Canadian portions of the Great Lakes. (*See* §§ 1043.60 and 1043.70 for provisions related to fuel use by such vessels). To be excluded, the vessel must conform to each of the following provisions:

(i) All compression-ignition engines on the vessel must conform fully to all applicable provisions of 40 CFR parts 94 and 1042.

(ii) The vessel may not contain any engines with a specific engine displacement at or above 30.0 liters per cylinder.

(iii) Any engine installed in the vessel that is not covered by an EIAPP must be labeled as specified in 40 CFR 1042.135 with respect to whether it meets the requirements of Regulation 13 of Annex VI.

(b) *Foreign-flagged vessels*. The provisions of this part apply for all non-public foreign-flagged vessels (including engines installed on such vessels) as follows:

(1) The requirements of this part apply for foreign-flagged vessels operating in U.S. navigable waters or the U.S. EEZ.

(2) For non-public vessels flagged by a country that is not a party to Annex VI, the requirements of this part apply in the same manner as apply for Party vessels, except as otherwise provided in this part. For example, *see* § 1043.30(b)(3) for provisions related to showing compliance with this requirement without an EIAPP certificate. *See* § 1043.60 for specific operating requirements.

(3) Canadian vessels that operate only within the Great Lakes and are subject to an alternative NO_X control measure established by the Canadian government are excluded from the NO_X-related requirements of this part.

(c) *Fuel suppliers*. The provisions of § 1043.80 apply for all persons supplying fuel to any vessel subject to this part.

(d) *Sea bed mineral exploration*. This part does not apply to emissions directly arising from the exploration, exploitation, and associated offshore processing of sea-bed mineral resources. Note that other regulations apply with respect to these emissions in certain circumstances, and that engines that are not solely dedicated to such activities are otherwise subject to all requirements of this part.

§ 1043.20 Definitions.

The following definitions apply to this part:

2008 Annex VI means Annex VI to the MARPOL Protocol, including amendments adopted in October 2008. The 2008 Annex VI is incorporated by reference in § 1043.100. Note that this version of Annex VI does not include any amendments that may be adopted in the future. This 2008 version applies for certain provisions of this part such as those applicable for internal waters and for non-Party vessels.

*Administrato*r means the Administrator of the Environmental Protection Agency.

Annex VI means Annex VI of the MARPOL Protocol.

APPS means the Act to Prevent Pollution from Ships (33 U.S.C. 1901–1915).

Designated Certification Officer means the EPA official to whom the Administrator has delegated authority to issue EIAPP certificates. Note that the Designated Certification Officer is also delegated certain authorities under this part in addition to the authority to issue EIAPP certificates.

ECA associated area means the U.S. internal waters that are navigable from the ECA. This term does not include internal waters that are shoreward of ocean waters that are not part of an emission control area.

EIAPP certificate means a certificate issued to certify initial compliance with Regulation 13 of Annex VI. (Note that EIAPP stands for Engine International Air Pollution Prevention under Annex VI.)

Emission control area (ECA) means an area designated pursuant to Annex VI as an Emission Control Area that:

(1) Is in force; and

(2) Includes waters of the U.S. territorial sea and/or EEZ.

Engine has the meaning given in 40 CFR 1068.30.

EPA means the United States Environmental Protection Agency.

Foreign-flagged vessel means a vessel of foreign registry or a vessel operated under the authority of a country other than the United States.

Good engineering judgment has the meaning given in 40 CFR 1068.30. We will evaluate engineering judgments as described in 40 CFR 1068.5.

Great Lakes means all the streams, rivers, lakes, and other bodies of water that are within the drainage basin of the St. Lawrence River, west of Anticosti Island.

IMO means the International Maritime Organization.

Major conversion has the meaning given in 2008 Annex VI (incorporated by reference in § 1043.100).

MARPOL Protocol has the meaning given in 33 U.S.C. 1901.

Navigable waters has the meaning given in 33 U.S.C. 1901.

Non-Party vessel means a vessel flagged by a country that is not a party to Annex VI.

NO_X Technical Code means the ''Technical Code on Control of Emission of Nitrogen Oxides from Marine Diesel Engines'' adopted by IMO (incorporated by reference in § 1043.100). The Technical Code is part of 2008 Annex VI.

Operator has the meaning given in 33 U.S.C. 1901.

Owner has the meaning given in 33 U.S.C. 1901.

Party vessel means a vessel flying the flag of, registered in, or operating under the authority of a country that is a party to Annex VI.

Person has the meaning given in 33 U.S.C. 1901.

Public vessels means warships, naval auxiliary vessels, and other vessels owned or operated by a sovereign country when engaged in noncommercial service.

Secretary has the meaning given in 33 U.S.C. 1901.

U.S. EEZ means the Exclusive Economic Zone of the United States, as defined in Presidential Proclamation 5030 of March 10, 1983.

U.S.-flagged vessel means a vessel of U.S. registry or a vessel operated under the authority of the United States.

Vessel has the meaning given to ''ship'' in APPS.

We means EPA.

§ 1043.30 General obligations.

(a) 33 U.S.C. 1907 prohibits any person from violating any provisions of the MARPOL Protocol, whether or not they are a manufacturer, owner or operator. For manufacturers, owners and operators of vessels subject to this part, it is the responsibility of such manufacturers, owners and operators to ensure that all employees and other agents operating on their behalf comply with these requirements.

(b) Manufacturers of engines to be installed on U.S. vessels subject to this part must obtain an EIAPP certificate for an engine prior to it being installed in a vessel.

(c) Engines with power output of more than 130 kW that are listed in this paragraph (c) must be covered by a valid EIAPP certificate, certifying the engine meets the applicable emission standards of Annex VI, unless the engine is excluded under § 1043.10 or paragraph (d) of this section. An EIAPP certificate is valid for a given engine only if it certifies compliance with the tier of standards applicable to that engine and the vessel into which it is being installed (or a later tier). Note that none of the requirements of this paragraph (c) are limited to new engines.

(1) Engines meeting any of the following criteria must be covered by a valid EIAPP certificate:

(i) Engines installed (or intended to be installed) on vessels that were constructed on or after January 1, 2000. This includes engines that met the definition of ''new marine engine'' in 40 CFR 1042.901 at any time on or after January 1, 2000, unless such engines are installed on vessels that were constructed before January 1, 2000.

(ii) Engines that undergo a major conversion on or after January 1, 2000, unless the engines have been exempt from this requirement under paragraph (e) of this section.

(2) For such engines intended to be installed on U.S.-flagged vessels, the engine may not be introduced into U.S. commerce before it is covered by a valid EIAPP certificate, except as allowed by this paragraph (c)(2).

(i) This paragraph (c)(2) does not apply for engines installed on vessels excluded under this part 1043.

(ii) Engines without a valid EIAPP certificate (because they are intended for domestic use only) may be introduced into U.S. commerce, but may not be installed on vessels that do not meet the requirements of § 1043.10(a)(2).

(iii) Engines that have been temporarily exempted by EPA under 40 CFR part 1042 or part 1068 may be introduced into U.S. commerce without a valid EIAPP certificate to the same extent they are allowed to be introduced into U.S. commerce without a valid part 1042 certificate of conformity, however, this allowance does not affect whether the engine must ultimately be covered by an EIAPP certificate. Unless otherwise excluded or exempted under this part 1043, the engine must be covered by an EIAPP certificate before being placed into service. For example, engines allowed to be temporarily distributed in an uncertified configuration under 40 CFR 1068.260 would not be

required to be covered by an EIAPP certificate while it is covered by the temporary exemption under 40 CFR 1068.260; however, it would be required to be covered by an EIAPP certificate before being placed into service.

(iv) All uninstalled marine engines within the United States are presumed to be intended to be installed on a U.S.-flagged vessel, unless there is clear and convincing evidence to the contrary.

(3) For engines installed on Party vessels, the engine may not operate in the U.S. navigable waters or the U.S. exclusive economic zone, or other areas designated under 33 U.S.C. 1902(a)(5)(B)(iii), (C)(iii), or (D)(iv) unless it is covered by a valid EIAPP certificate.

(4) Engines installed on non-Party vessels are not required to have EIAPP certificates, but the operator must have evidence of conformity with Regulation 13 of Annex VI issued by either the government of a country that is party to Annex VI or a recognized classification society. For the purposes of this paragraph, ''recognized classification society'' means a classification society that is a participating member of the International Association of Classification Societies (IACS).

(d) In addition to the engines excluded under § 1043.10, the following engines are excluded from the requirement to have an EIAPP certificate (or equivalent demonstration of compliance in the case of non-Party vessels) or otherwise meet the requirements of Regulation 13 of Annex VI.

(1) Spark-ignition engines.

(2) Non-reciprocating engines.

(3) Engines that do not use liquid fuel.

(4) Engines intended to be used solely for emergencies. This includes engines that power equipment such as pumps that are intended to be used solely for emergencies and engines installed in lifeboats intended to be used solely for emergencies. It does not include engines to be used for both emergency and non-emergency purposes.

(e) The following requirements apply to Party vessels, including U.S.-flagged vessels:

(1) The requirements specified in Annex VI apply for vessels subject to this part for operation in U.S. navigable waters or the U.S. EEZ. (*See* § 1043.60 for a summary of the standards included in these requirements.)

(2) Vessels operating in an ECA must also comply with the requirements of Annex VI applicable to operation in an ECA.

(3) Vessels operating in waters of an ECA associated area must also comply with the requirements in § 1043.60.

(f) The following requirements apply to non-Party vessels:

(1) Non-Party vessels operating in U.S. navigable waters or the U.S. EEZ must comply with the operating and recordkeeping requirements of the 2008 Annex VI (incorporated by reference in § 1043.100) related to Regulations 13, 14 and 18 of the 2008 Annex VI. This paragraph (f)(1) does not address requirements of other portions of Annex VI.

(2) Non-Party vessels operating in an ECA or ECA associated area must also comply with the requirements in § 1043.60.

(g) A replacement engine may be exempted by EPA from Regulation 13 of Annex VI and the NO_X-related requirements of this part if it is identical to the engine being replaced and the old engine was not subject to Regulation 13 of Annex VI. Send requests for such exemptions to the Designated Certification Officer.

(h) Compliance with the provisions of this part 1043 does not affect your responsibilities under 40 CFR part 1042 for engines subject to that part 1042.

§ 1043.40 EIAPP certificates.

(a) Engine manufacturers seeking EIAPP certificates for new engines to be used in U.S.-flagged vessels must apply to EPA for an EIAPP certificate in compliance with the requirements of this section (which references 40 CFR part 1042). Note that under APPS engine manufacturers must comply with the applicable requirements of Regulation 13 of Annex VI to obtain a certificate. Note also that only the Administrator or the EPA official designated by the Administrator may issue EIAPP certificates on behalf of the U.S. Government.

(b) Persons other than engine manufacturers may apply for and obtain EIAPP certificates for new engines to

be used in U.S.-flagged vessels by complying with the requirements of this section (which references 40 CFR part 1042) and the applicable requirements of Regulation 13 of Annex VI.

(c) In appropriate circumstances, EPA may issue an EIAPP certificate under this section for non-new engines or engines for vessels that will not initially be flagged in the U.S.

(d) The process for obtaining an EIAPP certificate is described in § 1043.41. That section references regulations in 40 CFR part 1042, which apply under the Clean Air Act. References in that part to certificates of conformity are deemed to mean EIAPP certificates. References in that part to the Clean Air Act as the applicable statute are deemed to mean 33 U.S.C. 1901–1915.

(e) For engines that undergo a major conversion or for engines installed on imported vessels that become subject to the requirements of this part, we may specify alternate certification provisions consistent with the intent of this part.

(f) This paragraph (f) applies for engines that were originally excluded from this part because they were intended for domestic use and were introduced into U.S. commerce without an EIAPP certificate. Note that such engines must be labeled as specified under 40 CFR 1042.135 to indicate that they are intended for domestic use. Such engines may be installed on vessels not intended only for domestic operation provided the engine manufacturer, vessel manufacturer, or vessel owner obtains an EIAPP certificate. Similarly, vessels originally intended only for domestic operation may be used internationally provided the engine manufacturer, vessel manufacturer, or vessel owner obtains an EIAPP certificate. In either case, the Technical File must specify that the engine was originally certified for domestic use only, prior to being covered by an EIAPP certificate. Engine manufacturers may provide a supplemental label to clarify that the engine is no longer limited to domestic service. An engine manufacturer, vessel manufacturer, or vessel owner may also ask to apply the provisions of this paragraph to engines originally certified for public vessels.

§ 1043.41 EIAPP certification process.

This section describes the process for obtaining the EIAPP certificate required by § 1043.40.

(a) You must send the Designated Certification Officer a separate application for an EIAPP certificate for each engine family. An EIAPP certificate is valid starting with the indicated effective date and is valid for any production until such time as the design of the engine family changes or more stringent emission standards become applicable, whichever comes first. You may obtain preliminary approval of portions of the application under 40 CFR 1042.210.

(b) The application must contain all the information required by this part. It must not include false or incomplete statements or information (*see* 40 CFR 1042.255). Include the information specified in 40 CFR 1042.205 except as follows:

(1) You must include the dates on which the test engines were built and the locations where the test engines were built.

(2) Include a copy of documentation required by this part related to maintenance and in-use compliance for operators, such as the Technical File and onboard NO_X verification procedures as specified by the NO_X Technical Code (incorporated by reference in § 1043.100).

(3) You are not required to provide information specified in 40 CFR 1042.205 regarding useful life, emission labels, deterioration factors, PM emissions, or not-to-exceed standards.

(4) You must include a copy of your warranty instructions, but are not required to describe how you will meet warranty obligations.

(c) We may ask you to include less information than we specify in this section as long as you maintain all the information required by paragraph (b) of this section.

(d) You must use good engineering judgment for all decisions related to your application (*see* 40 CFR 1068.5).

(e) An authorized representative of your company must approve and sign the application.

(f) *See* 40 CFR 1042.255 for provisions describing how we will process your application.

(g) Your application, including the Technical File and onboard NO_X verification procedures, is subject to amendment as described in 40 CFR 1042.225.

(h) Perform emission tests as follows:

(1) Select an emission-data engine from each engine family for testing. For engines at or above 560 kW, you may use a development engine that is equivalent in design to the engine being certified. For Category 3 engines, you may use a single-cylinder version of the engine. Using good engineering judgment, select the engine configuration most likely to exceed an applicable emission standard, considering all exhaust emission constituents and the range of installation options available to vessel manufacturers.

(2) Test your emission-data engines using the procedures and equipment specified in 40 CFR part 1042, subpart F, or in the NO_X Technical Code (incorporated by reference in § 1043.100). We may require that your test be witnessed by an EPA official.

(3) We may measure emissions from any of your test engines or other engines from the engine family, as follows:

(i) We may decide to do the testing at your plant or any other facility. You must deliver the test engine to any test facility we designate. The test engine you provide must include appropriate manifolds, aftertreatment devices, electronic control units, and other emission-related components not normally attached directly to the engine block. If we do the testing at your plant, you must schedule it as soon as possible and make available the instruments, personnel, and equipment we need.

(ii) If we measure emissions from one of your test engines, the results of that testing become the official emission results for the engine. Unless we later invalidate these data, we may decide not to consider your data in determining if your engine family meets applicable requirements.

(iii) Before we test one of your engines, we may set its adjustable parameters to any point within the specified adjustable ranges (*see* 40 CFR 1042.115(d)).

(iv) Before we test one of your engines, we may calibrate it within normal production tolerances for anything we do not consider an adjustable parameter.

(4) We may require you to test a second engine of the same or different configuration in addition to the engine tested under paragraph (b) of this section.

(5) If you use an alternate test procedure under 40 CFR 1065.10 and later testing shows that such testing does not produce results that are equivalent to the procedures otherwise required by this part, we may reject data you generated using the alternate procedure.

(i) Collect emission data using measurements to one more decimal place than the applicable standard, then round the value to the same number of decimal places as the emission standard. Compare the rounded emission levels to the emission standard for each emission-data engine.

(j) Your engine family is considered in compliance with the emission standards in Regulation 13 of Annex VI if all emission-data engines representing that family have test results showing emission levels at or below these standards. Your engine family is deemed not to comply if any emission-data engine representing that family has test results showing an emission level above an applicable emission standard for any pollutant.

(k) If we determine your application is complete and shows that the engines meet all the requirements of this part, we will issue an EIAPP certificate for your engines. We may make the approval subject to additional conditions.

§ 1043.50 Approval of methods to meet Tier 1 retrofit NO_X standards.

Regulation 13 of Annex VI provides for certification of Approved Methods, which are retrofit procedures that enable Pre-Tier 1 engines to meet the Tier 1 NO_X standard of regulation 13 of Annex VI. Any person may request approval of such a method by submitting an application for certification of an Approve Method to the Designated Certification Officer. If we determine that your application conforms to the requirements of Regulation 13 of Annex

VI, we will issue a certificate and notify IMO that your Approved Method has been certified.

§ 1043.55 Applying equivalent controls instead of complying with fuel requirements.

Regulation 4 of Annex VI allows Administrations to approve the use of fuels not meeting the requirements of Regulation 14 of the Annex, provided the vessel applies a method that results in equivalent emission reductions. This section describes provisions related to applying this allowance.

(a) Any person may request approval of such equivalent methods for controlling emissions on U.S.-flagged vessels by submitting an application for certification of an equivalent control method to the Designated Certification Officer. If we determine that your control method achieves emission levels equivalent to those achieved by the use of fuels meeting the requirements of Regulation 14 of Annex VI, we will issue a certificate and notify IMO that your method has been certified.

(b) The provisions of this paragraph (b) apply for vessels equipped with controls certified by the Administration of a foreign flag vessel to achieve emission levels equivalent to those achieved by the use of fuels meeting the applicable fuel sulfur limits of Regulation 14 of Annex VI. Fuels not meeting the applicable fuel sulfur limits of Regulation 14 of Annex VI may be used on such vessels consistent with the provisions of the IAPP certificate, APPS and Annex VI.

(c) Compliance with the requirements of this section does not affect the applicability of requirements or prohibitions specified by other statutes or regulations with respect to water pollution.

§ 1043.60 Operating requirements for engines and vessels subject to this part.

This section specifies the operating requirements of this part. Note that it does not limit the operating requirements of APPS or Annex VI that are applicable to U.S.-flagged vessels outside of U.S. domestic waters.

(a) Except as specified otherwise in this part, NO_X emission limits apply to all vessels subject to this part as specified in the following table:

TABLE 1 TO § 1043.60 ANNEX VI NO_X EMISSION STANDARDS (G/KW-HR)

Tier	Area of applicability	Model year	Maximum in-use engine speed		
			Less than 130 RPM	130–2000 RPM[a]	Over 2000 RPM
Tier 1	All U.S. navigable waters and EEZ	2004–2010	17.0	$45.0 \cdot n^{(-0.20)}$	9.8
Tier 2	All U.S. navigable waters and EEZ	2011–2015	14.4	$44.0 \cdot n^{(-0.23)}$	7.7
Tier 2	All U.S. navigable waters and EEZ, exluding ECA and ECA associated areas.	2016 and later	14.4	$44.0 \cdot n^{(-0.23)}$	7.7
Tier 3	ECA and ECA associated areas	2016 and later	3.4	$9.0 \cdot n^{(-0.20)}$	2.0

[a] Applicable standards are calculated from n (maximum in-use engine speed, in RPM, as specified in § 1042.140). Round the standards to one decimal place.

(b) Except as specified otherwise in this part, fuel sulfur limits apply to all vessels subject to this part as specified in the following table:

TABLE 2 TO § 1043.60 ANNEX VI FUEL SULFUR LIMITS

[wt %]

Calendar years	Sulfur limit in all U.S. navigable waters and EEZ (percent)	Sulfur limit in ECA and ECA associated areas (percent)
2010–2011	4.50	1.00
2012–2015	3.50	1.00
2016–2019	3.50	0.10
2020 and later	0.50	0.10

(c) Operators of non-Party vessels must comply with the requirements of paragraphs (a) and (b) of this section as well as other operating requirements and restrictions specified in 2008 Annex VI (incorporated by reference in § 1043.100) related to Regulations 13, 14, and 18.

(d) This paragraph (d) applies for vessels that are excluded from Regulation 13 of Annex VI and the NO_X-related requirements of this part under § 1043.10(a)(2) or (b)(3) because they operate only domestically. Where the vessels operate using only fuels meeting the specifications of 40 CFR part 80 for distillate fuel, they are deemed to be in full compliance with the fuel use requirements and prohibitions of this part and of Regulations 14 and 18 of Annex VI.

(e) Except as noted in paragraph (d) of this section, nothing in this section limits the operating requirements and restrictions of Annex VI, as implemented by APPS, for Party vessels, including U.S.-flagged vessels. Note also that nothing in this part limits the operating requirements and restrictions applicable for engines and vessels subject to 40 CFR part 1042 or the requirements and restrictions applicable for fuels subject to 40 CFR part 80.

(f) We may exempt historic steamships from the fuel requirements of this part for operation in U.S. internal waters. Send requests for exemptions to the Designated Certification Officer.

§ 1043.70 General recordkeeping and reporting requirements.

(a) Under APPS, owners and operators of Party vessels must keep records related to NO_X standards and in-use fuel specifications such as the Technical File, the Engine Book of Record Parameters, and bunker delivery notes. Owners and operators of non-Party vessels must keep these records as specified in the NO_X Technical Code and Regulations 13, 14, and 18 of Annex VI (incorporated by reference in § 1043.100). We may inspect these records as allowed by APPS. As part of our inspection, we may require that the owner submit copies of these records to us.

(b) Nothing in this part limits recordkeeping and reporting the Secretary may require, nor does it preclude the Secretary from providing copies of any records to EPA.

(c) Nothing in this part limits the recordkeeping and reporting requirements applicable with respect to engines and vessels subject to 40 CFR part 1042 or with respect to fuels subject to 40 CFR part 80.

(d) This paragraph (d) applies for vessels that are excluded from Regulation 13 of Annex VI and the NO_X-related requirements of this part under § 1043.10(a)(2) or (b)(3) because they operate only domestically. Where the vessel operator has fuel receipts (or equivalent records) for the preceding three years showing it operated using only fuels meeting the specifications of 40 CFR part 80 for distillate fuel, they are deemed to be in full compliance with the fuel recordkeeping requirements and prohibitions of this part and Annex VI.

§ 1043.80 Recordkeeping and reporting requirements for fuel suppliers.

Under APPS, fuel suppliers must provide bunker delivery notes to vessel operators for any fuel for an engine on any vessel identified in paragraph (a) of this section. Fuel suppliers must also keep copies of these records.

(a) The requirements of this section apply for fuel delivered to any of the following vessels:

(1) Vessels of 400 gross tonnage and above engaged in voyages to ports or offshore terminals under the jurisdiction of other Parties.

(2) Platforms and drilling rigs engaged in voyages to waters under the sovereignty or jurisdiction of other Parties.

(b) Except as allowed by paragraph (c) of this section, the bunker delivery note must contain the following:

(1) The name and IMO number of the receiving vessel.

(2) Port (or other description of the location, if the delivery does not take place at a port).

(3) Date the fuel is delivered to the vessel (or date on which the delivery begins where the delivery begins on one day and ends on a later day).

(4) Name, address, and telephone number of fuel supplier.

(5) Fuel type and designation under 40 CFR part 80.

(6) Quantity in metric tons.

(7) Density at 15 °C, in kg/m^3.

(8) Sulfur content in weight percent.

(9) A signed statement by an authorized representative of fuel supplier certifying that the fuel supplied conforms to Regulations 14 and 18 of Annex VI consistent with it designation, intended use, and the date on which it is to be used. For example, with respect to conformity to Regulation 14 of Annex VI, a fuel designated and intended for use in an ECA any time between July 1, 2010 and January 1, 2015 may not have a sulfur content above 1.00 weight percent. This statement is not required where the vessel conforms to the requirements of § 1043.55.

(c) You may measure density and sulfur content according to the specifications of Annex VI, or according to other equivalent methods that we approve. Where the density and/or sulfur content of the delivered fuel cannot be measured, we may allow the use of alternate methods to specify the density and/or sulfur content of the fuel. For example, where fuel is supplied from multiple tanks on a supply vessel, we may allow the density and sulfur content of the fuel to be calculated as a weighted average of the measured densities and sulfur contents of the fuel that is supplied from each tank.

§ 1043.90 [Reserved]

§ 1043.95 Interim provisions.

The interim provisions of this section apply for vessels operating exclusively in the Great Lakes.

(a) Notwithstanding other provisions of this part, the requirements of this part do not apply for vessels propelled by steam turbine engines or reciprocating steam engines (also known as steamships), provided they were propelled by steam engines and operated within the Great Lakes before October 30, 2009 and continue to operate exclusively within the Great Lakes.

(b) In cases of serious economic hardship, we may exempt Great Lakes vessels from the otherwise applicable fuel use requirements under this part.

(1) To be eligible, you must demonstrate that all of the following are true:

(i) Unusual circumstances exist that impose serious economic hardship and significantly affect your ability to comply.

(ii) You have taken all reasonable steps to minimize the extent of the nonconformity.

(iii) No other allowances are available under the regulations in this chapter to avoid the impending violation.

(2) Send the Designated Certification Officer a written request for an exemption no later than January 1, 2014.

(3) Applicants must provide, at a minimum, the following information:

(i) Detailed description of existing contract freight rates, the additional operating costs attributed to complying with the regulations, any loan covenants or other requirements regarding vessel financial instruments or agreements.

(ii) Bond rating of entity that owns the vessels in question (in the case of joint ventures, include the bond rating of the joint venture entity and the bond ratings of all partners; in the case of corporations, include the bond ratings of any parent or subsidiary corporations).

(iii) Estimated capital investment needed to comply with the requirements of this part by the applicable date.

(4) In determining whether to grant the exemptions, we will consider all relevant factors, including the following:

(i) The number of vessels to be exempted.

(ii) The size of your company and your ability to endure the hardship.

(iii) The length of time a vessel is expected to remain out of compliance with this part.

(iv) The ability of an individual vessel to recover capital investments incurred to repower or otherwise modify a vessel to reduce air emissions.

(5) In addition to the application requirements of paragraphs (b)(1) through (4) of this section, your application for temporary relief under this paragraph (b) must also include a compliance plan that shows the period over which the waiver is needed.

(6) We may impose conditions on the waiver, including conditions to limit or recover any environmental loss.

(c) Prior to January 1, 2015, it is not a violation of this part for vessels operating exclusively in the Great Lakes to use a residual fuel not meeting the sulfur limits of Regulation 14.4.2 of Annex VI, where the operator bunkers with the lowest sulfur marine residual fuel that was available within the port area where the vessel bunkered the fuel. For purposes of this paragraph (c), port area means the geographic limits of the port as specified by the Army Corps of Engineers. The reporting and recordkeeping requirements of this part continue to apply for such operation. In addition, if you operate using a residual fuel not meeting the sulfur limits of Regulation 14.4.2 under this paragraph (c), you must send a report to the Designated Certification Officer that identifies the fuel that was used and documents how you determined that no compliant fuel was available. You must send this report within three months after the fueling event.

§ 1043.100 Reference materials.

Documents listed in this section have been incorporated by reference into this part. The Director of the Federal Register approved the incorporation by reference as prescribed in 5 U.S.C. 552(a) and 1 CFR part 51. Anyone may inspect copies at the U.S. EPA, Air and Radiation Docket and Information Center, 1301 Constitution Ave., NW., Room B102, EPA West Building, Washington, DC 20460, (202) 566–1744, or at the National Archives and Records Administration (NARA). For information on the availability of this material at NARA, call 202–741–6030, or go to: *http://www.archives.gov/federal_register/code_of_federal_regulations/ibr_locations.html*.

(a) *IMO material*. This paragraph (a) lists material from the International Maritime Organization that we have incorporated by reference. Anyone may purchase copies of these materials from the International Maritime Organization, 4 Albert Embankment, London SE1 7SR, United Kingdom, or *http://www.imo.org*, or 44–(0)20–7735–7611.

(1) Revised MARPOL Annex VI, Regulations for the Prevention of Air Pollution from Ships, and NO_X Technical Code 2008, 2009 edition.

(i) Revised MARPOL Annex VI, Regulations for the Prevention of Pollution from Ships (''2008 Annex VI''); IBR approved for § 1043.1, 1043.20, 1043.30(f), and 1043.60(c), and 1043.70(a).

(ii) NO_X Technical Code 2008 (''NO_X Technical Code''); IBR approved for §§ 1043.20, 1043.41(b) and (h), and 1043.70(a).

(2) [Reserved]

(b) [Reserved]

PART 1045—CONTROL OF EMISSIONS FROM SPARK-IGNITION PROPULSION MARINE ENGINES AND VESSELS

Subpart A—Overview and Applicability

Sec.
1045.1 Does this part apply for my products?
1045.2 Who is responsible for compliance?
1045.5 Which engines are excluded from this part's requirements?
1045.10 How is this part organized?
1045.15 Do any other CFR parts apply to me?
1045.20 What requirements apply to my vessels?
1045.25 How do the requirements related to evaporative emissions apply to engines and their fuel systems?
1045.30 Submission of information.

Subpart B—Emission Standards and Related Requirements

1045.101 What exhaust emission standards and requirements must my engines meet?
1045.103 What exhaust emission standards must my outboard and personal watercraft engines meet?
1045.105 What exhaust emission standards must my sterndrive/inboard engines meet?
1045.107 What are the not-to-exceed emission standards?
1045.110 How must my engines diagnose malfunctions?
1045.112 What are the standards for evaporative emissions?
1045.115 What other requirements apply?
1045.120 What emission-related warranty requirements apply to me?
1045.125 What maintenance instructions must I give to buyers?
1045.130 What installation instructions must I give to vessel manufacturers?
1045.135 How must I label and identify the engines I produce?
1045.140 What is my engine's maximum engine power?

1045.145 Are there interim provisions that apply only for a limited time?

Subpart C—Certifying Engine Families

1045.201 What are the general requirements for obtaining a certificate of conformity?
1045.205 What must I include in my application?
1045.210 May I get preliminary approval before I complete my application?
1045.220 How do I amend the maintenance instructions in my application?
1045.225 How do I amend my application for certification to include new or modified engines or change an FEL?
1045.230 How do I select engine families?
1045.235 What emission testing must I perform for my application for a certificate of conformity?
1045.240 How do I demonstrate that my engine family complies with exhaust emission standards?
1045.245 How do I determine deterioration factors from exhaust durability testing?
1045.250 What records must I keep and what reports must I send to EPA?
1045.255 What decisions may EPA make regarding my certificate of conformity?

Subpart D—Testing Production-Line Engines

1045.301 When must I test my production-line engines?
1045.305 How must I prepare and test my production-line engines?
1045.310 How must I select engines for production-line testing?
1045.315 How do I know when my engine family fails the production-line testing requirements?
1045.320 What happens if one of my production-line engines fails to meet emission standards?
1045.325 What happens if an engine family fails the production-line testing requirements?
1045.330 May I sell engines from an engine family with a suspended certificate of conformity?
1045.335 How do I ask EPA to reinstate my suspended certificate?
1045.340 When may EPA revoke my certificate under this subpart and how may I sell these engines again?
1045.345 What production-line testing records must I send to EPA?
1045.350 What records must I keep?

Subpart E—In-Use Testing

1045.401 What testing requirements apply to my engines that have gone into service?
1045.405 How does this program work?
1045.410 How must I select, prepare, and test my in-use engines?
1045.415 What happens if in-use engines do not meet requirements?
1045.420 What in-use testing information must I report to EPA?
1045.425 What records must I keep?

Subpart F—Test Procedures

1045.501 How do I run a valid emission test?
1045.505 How do I test engines using discrete-mode or ramped-modal duty cycles?
1045.515 What are the test procedures related to not-to-exceed standards?
1045.520 What testing must I perform to establish deterioration factors?

Subpart G—Special Compliance Provisions

1045.601 What compliance provisions apply to these engines?
1045.605 What provisions apply to engines already certified under the motor vehicle or Large SI programs?
1045.610 What provisions apply to using engines already certified to Small SI emission standards?
1045.620 What are the provisions for exempting engines used solely for competition?
1045.625 What requirements apply under the Diurnal Transition Program?
1045.630 What is the personal-use exemption.
1045.635 What special provisions apply for small-volume engine manufacturers?
1045.640 What special provisions apply to branded engines?
1045.645 What special provisions apply for converting an engine to use an alternate fuel?
1045.650 Do delegated-assembly provisions apply for marine engines?
1045.655 What special provisions apply for installing and removing altitude kits?
1045.660 How do I certify outboard or personal watercraft engines for use in jet boats?

Subpart H—Averaging, Banking, and Trading for Certification

1045.701 General provisions.
1045.705 How do I generate and calculate exhaust emission credits?
1045.706 How do I generate and calculate evaporative emission credits?
1045.710 How do I average emission credits?
1045.715 How do I bank emission credits?
1045.720 How do I trade emission credits?
1045.725 What must I include in my application for certification?
1045.730 What ABT reports must I send to EPA?
1045.735 What records must I keep?
1045.745 What can happen if I do not comply with the provisions of this subpart?

Subpart I—Definitions and Other Reference Information

1045.801 What definitions apply to this part?
1045.805 What symbols, acronyms, and abbreviations does this part use?
1045.810 What materials does this part reference?
1045.815 What provisions apply to confidential information?
1045.820 How do I request a hearing?
1045.825 What reporting and recordkeeping requirements apply under this part?
APPENDIX I TO PART 1045—SUMMARY OF PREVIOUS EMISSION STANDARDS
APPENDIX II TO PART 1045—DUTY CYCLES FOR PROPULSION MARINE ENGINES

AUTHORITY: 42 U.S.C. 7401–7671q.

SOURCE: 73 FR 59194, Oct. 8, 2008, unless otherwise noted.

Subpart A—Overview and Applicability

§ 1045.1 Does this part apply for my products?

(a) Except as provided in § 1045.5, the regulations in this part 1045 apply as follows:

(1) The requirements of this part related to exhaust emissions apply to new, spark-ignition propulsion marine engines beginning with the 2010 model year.

(2) The requirements of this part related to evaporative emissions apply to fuel lines and fuel tanks used with marine engines that use a volatile liquid fuel (such as gasoline) as specified in 40 CFR part 1045.112. This includes fuel lines and fuel tanks used with auxiliary marine engines. This also includes portable marine fuel tanks and associated fuel lines.

(b) We specify optional standards for certifying sterndrive/inboard engines before the 2010 model year in § 1045.145(a). Engines certified to these standards are subject to all the requirements of this part as if these optional standards were mandatory.

(c) See 40 CFR part 91 for requirements that apply to outboard and personal watercraft engines not yet subject to the requirements of this part 1045.

(d) The provisions of §§ 1045.620 and 1045.801 apply for new engines used solely for competition beginning January 1, 2010.

§ 1045.2 Who is responsible for compliance?

The requirements and prohibitions of this part apply to manufacturers of engines and fuel-system components as described in § 1045.1. The requirements of this part are generally addressed to manufacturers subject to this part's requirements. The term ''you'' generally means the certifying manufacturer. For provisions related to exhaust emissions, this generally means the engine manufacturer, especially for issues related to certification (including production-line testing, reporting, etc.). For provisions related to certification with respect to evaporative emissions, this generally means the vessel manufacturer. Vessel manufacturers must meet applicable requirements as described in § 1045.20. Engine manufacturers must meet requirements related to evaporative emissions as described in § 1045.25.

§ 1045.5 Which engines are excluded from this part's requirements?

(a) *Auxiliary engines.* The exhaust emission standards of this part do not apply to auxiliary marine engines. See 40 CFR part 90, 1048, or 1054 for the exhaust emission standards that apply. Evaporative emission standards apply as specified in § 1045.112.

(b) *Hobby engines and vessels.* This part does not apply with respect to reduced-scale models of vessels that are not capable of transporting a person.

(c) *Large natural gas engines.* Propulsion marine engines powered by natural gas with maximum engine power at or above 250 kW are deemed to be compression-ignition engines. These engines are therefore subject to all the requirements of 40 CFR part 1042 instead of this part even if they would otherwise meet the definition of ''spark-ignition'' in § 1045.801.

§ 1045.10 How is this part organized?

This part 1045 is divided into the following subparts:

(a) Subpart A of this part defines the applicability of this part 1045 and gives an overview of regulatory requirements.

(b) Subpart B of this part describes the emission standards and other requirements that must be met to certify

engines under this part 1045. Note that § 1045.145 discusses certain interim requirements and compliance provisions that apply only for a limited time.

(c) Subpart C of this part describes how to apply for a certificate of conformity.

(d) Subpart D of this part describes general provisions for testing production-line engines.

(e) Subpart E of this part describes general provisions for testing in-use engines.

(f) Subpart F of this part describes how to test your engines (including references to other parts of the Code of Federal Regulations).

(g) Subpart G of this part and 40 CFR part 1068 describe requirements, prohibitions, and other provisions that apply to engine manufacturers, vessel manufacturers, owners, operators, rebuilders, and all others.

(h) Subpart H of this part describes how you may generate and use exhaust and evaporative emission credits to certify your engines and vessels.

(i) Subpart I of this part contains definitions and other reference information.

§ 1045.15 Do any other CFR parts apply to me?

(a) Part 1060 of this chapter describes standards and procedures that apply for controlling evaporative emissions from engines fueled by gasoline or other volatile liquid fuels and the associated fuel systems. See § 1045.112 for information about how that part applies.

(b) Part 1065 of this chapter describes procedures and equipment specifications for testing engines to measure exhaust emissions. Subpart F of this part 1045 describes how to apply the provisions of part 1065 of this chapter to determine whether engines meet the exhaust emission standards in this part.

(c) The requirements and prohibitions of part 1068 of this chapter apply to everyone, including anyone who manufactures, imports, installs, owns, operates, or rebuilds any of the engines subject to this part 1045, or vessels powered by these engines. Part 1068 of this chapter describes general provisions, including these seven areas:

(1) Prohibited acts and penalties for engine manufacturers, vessel manufacturers, and others.

(2) Rebuilding and other aftermarket changes.

(3) Exclusions and exemptions for certain engines.

(4) Importing engines.

(5) Selective enforcement audits of your production.

(6) Defect reporting and recall.

(7) Procedures for hearings.

(d) Other parts of this chapter apply if referenced in this part 1045.

§ 1045.20 What requirements apply to my vessels?

(a) If you manufacture vessels with engines certified to the exhaust emission standards in this part, your vessels must meet all emission standards with the engine and fuel system installed.

(b) You may need to certify your vessels or fuel systems as described in 40 CFR 1060.1 and 1060.601. If you produce vessels subject to this part without obtaining a certificate, you must still meet the requirements of 40 CFR 1060.101(e) and (f) and keep records as described in 40 CFR 1060.210.

(c) You must identify and label vessels you produce under this section consistent with the requirements of § 1045.135 and 40 CFR part 1060.

(d) You must follow all emission-related installation instructions from the certifying manufacturers as described in § 1045.130 and 40 CFR 1068.105. If you do not follow the installation instructions, we may consider your vessel to be not covered by the certificates of conformity. Introduction of such vessels into U.S. commerce violates 40 CFR 1068.101.

§ 1045.25 How do the requirements related to evaporative emissions apply to engines and their fuel systems?

(a) Engine manufacturers must provide the installation instructions required by § 1045.130 to the ultimate purchasers of the engine. These instructions may be combined with the maintenance instructions required by § 1045.125.

(b) Engines sold with attached fuel lines or installed fuel tanks must be covered by the appropriate certificates

of conformity issued under 40 CFR part 1060.

(c) Fuel lines intended to be used with new engines and new portable marine fuel tanks must be certified to the applicable requirements of 40 CFR part 1060. Similarly, fuel tanks intended to be used with new enignes must be certified to the applicable requirements of 40 CFR part 1060.

(d) All persons installing engines certified under this part 1045 must follow the certifying manufacturer's emission-related installation instructions (see § 1045.130 and 40 CFR 1068.105).

§ 1045.30 Submission of information.

(a) This part includes various requirements to record data or other information. Refer to § 1045.825 and 40 CFR 1068.25 regarding recordkeeping requirements. If recordkeeping requirements are not specified, store these records in any format and on any media and keep them readily available for one year after you send an associated application for certification, or one year after you generate the data if they do not support an application for certification. You must promptly send us organized, written records in English if we ask for them. We may review them at any time.

(b) The regulations in § 1045.255 and 40 CFR 1068.101 describe your obligation to report truthful and complete information and the consequences of failing to meet this obligation. This includes information not related to certification.

(c) Send all reports and requests for approval to the Designated Compliance Officer (see § 1045.801).

(d) Any written information we require you to send to or receive from another company is deemed to be a required record under this section. Such records are also deemed to be submissions to EPA. We may require you to send us these records whether or not you are a certificate holder.

Subpart B—Emission Standards and Related Requirements

§ 1045.101 What exhaust emission standards and requirements must my engines meet?

(a) You must show that your engines meet the following requirements:

(1) Outboard and personal watercraft engines must meet the exhaust emission standards specified in § 1045.103.

(2) Sterndrive/inboard engines must meet the exhaust emission standards specified in § 1045.105. You may optionally meet these standards earlier than we require, as specified in § 1045.145(b).

(3) Sterndrive/inboard engines must meet the engine-diagnostic requirements in § 1045.110.

(4) All engines must meet the requirements in § 1045.115.

(b) It is important that you read § 1045.145 to determine if there are other interim requirements or interim compliance provisions that apply for a limited time.

§ 1045.103 What exhaust emission standards must my outboard and personal watercraft engines meet?

(a) Duty-cycle emission standards. Starting in the 2010 model year, exhaust emissions from your outboard and personal watercraft engines may not exceed emission standards as follows:

(1) Measure emissions using the applicable steady-state test procedures described in subpart F of this part.

(2) The exhaust emission standards from the following table apply:

TABLE 1 TO § 1045.103—EMISSION STANDARDS FOR OUTBOARD AND PERSONAL WATERCRAFT ENGINES (g/kW-hr)

Pollutant	Power [1]	Emission standard
$HC + NO_X$	$P \leq 4.3$ kW	30.0
	$P > 4.3$ kW	$2.1 + 0.09 \times (151 + 557/P^{0.9})$
CO	$P \leq 40$ kW	$500 - 5.0 \times P$
	$P > 40$ kW	300

[1] Power (P) = maximum engine power for the engine family, in kilowatts (kW).

(3) For engines whose standard depends on maximum engine power, round the calculated $HC+NO_X$ emission standard to the nearest 0.1 g/kW-hr; round the calculated CO emission standard to the nearest g/kW-hr. Determine maximum engine power for the engine family as described in § 1045.140.

(b) *Averaging, banking, and trading.* You may generate or use emission credits under the averaging, banking, and trading (ABT) program described in subpart H of this part for demonstrating compliance with $HC+NO_X$ emission standards. For CO emissions, you may generate or use emission credits for averaging as described in subpart H of this part, but such credits may not be banked or traded. To generate or use emission credits, you must specify a family emission limit for each pollutant you include in the ABT program for each engine family. These family emission limits serve as the emission standards for the engine family with respect to all required testing instead of the standards specified in this section. An engine family meets emission standards even if its family emission limit is higher than the standard, as long as you show that the whole averaging set of applicable engine families meets the emission standards using emission credits and the engines within the family meet the family emission limit. The following FEL caps apply:

(1) For engines with maximum engine power at or below 4.3 kW, the maximum value of the family emission limit for $HC+NO_X$ is 81.0 g/kW-hr. For all other engines, the maximum value of the family emission limit for $HC+NO_X$ is defined by the following formula, with results rounded to the nearest 0.1 g/kW-hr:

$$FEL_{max,HC+NO_x} = 6.0 + 0.25 \cdot \left(151 + \frac{557}{P^{0.9}}\right)$$

(2) For engines with maximum engine power above 40 kW, the maximum value of the family emission limit for CO is 450 g/kW-hr. For all other engines, the maximum value is defined by the following formula, with results rounded to the nearest g/kW-hr:

$$FEL_{max,CO} = 650 - 5.0 \times P$$

(c) *Not-to-exceed emission standards.* Exhaust emissions may not exceed the not-to-exceed standards specified in § 1045.107.

(d) *Fuel types.* The exhaust emission standards in this section apply for engines using the fuel type on which the engines in the engine family are designed to operate. You must meet the numerical emission standards for hydrocarbons in this section based on the following types of hydrocarbon emissions for engines powered by the following fuels:

(1) Alcohol-fueled engines: THCE emissions.

(2) Natural gas-fueled engines: NMHC emissions.

(3) Other engines: THC emissions.

(e) *Useful life.* Your engines must meet the exhaust emission standards in paragraphs (a) through (c) of this section over the full useful life as follows:

(1) For outboard engines, the minimum useful life is 350 hours of engine operation or 10 years, whichever comes first.

(2) For personal watercraft engines, the minimum useful life is 350 hours of engine operation or 5 years, whichever comes first.

(3) You must specify a longer useful life in terms of hours for the engine family if the average service life of your vehicles is longer than the minimum value, as follows:

(i) Except as allowed by paragraph (e)(3)(ii) of this section, your useful life (in hours) may not be less than either of the following:

(A) Your projected operating life from advertisements or other marketing materials for any engines in the engine family.

(B) Your basic mechanical warranty for any engines in the engine family.

(ii) Your useful life may be based on the average service life of vehicles in the engine family if you show that the average service life is less than the useful life required by paragraph (e)(3)(i) of this section, but more than the minimum useful life (350 hours of engine operation). In determining the actual average service life of vehicles in an engine family, we will consider all available information and analyses. Survey data is allowed but not required to make this showing.

(f) *Applicability for testing*. The duty-cycle emission standards in this subpart apply to all testing performed according to the procedures in § 1045.505, including certification, production-line, and in-use testing. The not-to-exceed standards apply for all testing performed according to the procedures of subpart F of this part.

[73 FR 59194, Oct. 8, 2008, as amended at 75 FR 23019, Apr. 30, 2010]

§ 1045.105 What exhaust emission standards must my sterndrive/inboard engines meet?

(a) *Duty-cycle emission standards*. Starting in the 2010 model year, exhaust emissions from your sterndrive/inboard engines may not exceed emission standards as follows:

(1) Measure emissions using the applicable steady-state test procedures described in subpart F of this part.

(2) For conventional sterndrive/inboard engines, the $HC+NO_X$ emission standard is 5.0 g/kW-hr and the CO emission standard is 75.0 g/kW-hr.

(3) The exhaust emission standards from the following table apply for high-performance engines:

TABLE 1 TO § 1045.105—EMISSION STANDARDS FOR HIGH-PERFORMANCE ENGINES (g/kW-hr)

Model year	Power [1]	$HC+NO_X$	CO
2010	P≤ 485 kW	20.0	350
	P> 485 kW	25.0	350
2011+	P≤ 485 kW	16.0	350
	P> 485 kW	22.0	350

[1] Power (P) = maximum engine power in kilowatts (kW).

(b) *Averaging, banking, and trading*. You may not generate or use emission credits for high-performance engines. You may generate or use emission credits under the averaging, banking, and trading (ABT) program described in subpart H of this part for demonstrating compliance with $HC+NO_X$ and CO emission standards for conventional sterndrive-inboard engines. To generate or use emission credits, you must specify a family emission limit for each pollutant you include in the ABT program for each engine family. These family emission limits serve as the emission standards for the engine family with respect to all required testing instead of the standards specified in this section. An engine family meets emission standards even if its family emission limit is higher than the standard, as long as you show that the whole averaging set of applicable engine families meets the emission standards using emission credits and the engines within the family meet the family emission limit. Family emission limits for conventional sterndrive/inboard engines may not be higher than 16.0 g/kW-hr for $HC+NO_X$ and 150 g/kW-hr for CO except as specified in § 1045.145(c).

(c) *Not-to-exceed emission standards*. Exhaust emissions may not exceed the not-to-exceed standards specified in § 1045.107 for conventional sterndrive/inboard engines. These standards do not apply for high-performance engines.

(d) *Fuel types*. The exhaust emission standards in this section apply for engines using the fuel type on which the engines in the engine family are designed to operate. You must meet the numerical emission standards for hydrocarbons in this section based on the following types of hydrocarbon emissions for engines powered by the following fuels:

(1) Alcohol-fueled engines: THCE emissions.

(2) Natural gas-fueled engines: NMHC emissions.

(3) Other engines: THC emissions.

(e) *Useful life*. Your engines must meet the exhaust emission standards in paragraphs (a) through (c) of this section over their full useful life, as follows:

(1) For high-performance engines with maximum engine power above 485 kW, the useful life is 50 hours of operation or 1 year, whichever comes first. For high-performance engines with maximum engine power at or below 485

kW, the useful life is 150 hours of operation or 3 years, whichever comes first.

(2) For conventional sterndrive/inboard engines, the minimum useful life is 480 hours of operation or ten years, whichever comes first. However, you may request in your application for certification that we approve a shorter useful life for an engine family. We may approve a shorter useful life, in hours of engine operation but not in years, if we determine that these engines will rarely operate longer than the shorter useful life. If engines identical to those in the engine family have already been produced and are in use, your demonstration must include documentation from such in-use engines. In other cases, your demonstration must include an engineering analysis of information equivalent to such in-use data, such as data from research engines or similar engine models that are already in production. Your demonstration must also include any overhaul interval that you recommend, any mechanical warranty that you offer for the engine or its components, and any relevant customer design specifications. Your demonstration may include any other relevant information. The useful life value may not be shorter than any of the following:

(i) 150 hours of operation.

(ii) Your recommended overhaul interval.

(iii) Your mechanical warranty for the engine.

(3) You must specify a longer useful life for conventional sterndrive/inboard engines in terms of hours if the average service life of engines from the engine family is longer than the minimum useful life value, as follows:

(i) Except as allowed by paragraph (e)(3)(ii) of this section, your useful life (in hours) may not be less than either of the following:

(A) Your projected operating life from advertisements or other marketing materials for any engines in the engine family.

(B) Your basic mechanical warranty for any engines in the engine family.

(ii) Your useful life may be based on the average service life of engines in the engine family if you show that the average service life is less than the useful life required by paragraph (e)(3)(i) of this section, but more than the minimum useful life (480 hours of engine operation). In determining the actual average service life of engines in an engine family, we will consider all available information and analyses. Survey data is allowed but not required to make this showing.

(f) *Applicability for testing.* The duty-cycle emission standards in this section apply to all testing performed according to the procedures in § 1045.505, including certification, production-line, and in-use testing. The not-to-exceed standards apply for all testing performed according to the procedures of subpart F of this part.

§ 1045.107 What are the not-to-exceed emission standards?

Not-to-exceed emission standards apply as follows:

(a) Measure emissions using the not-to-exceed procedures in subpart F of this part:

(b) Determine the not-to-exceed standard, rounded to the same number of decimal places as the emission standard in Table 1 to this section from the following equation:

Not-to-exceed standard = (STD) × (M)

Where:

STD = The standard specified in paragraph (a) of this section if you certify without using ABT for that pollutant; or the FEL for that pollutant if you certify using ABT.

M = The NTE multiplier for that pollutant, as defined in paragraphs (c) through (e) of this section.

(c) For engines equipped with a catalyst, use NTE multipliers from the following table across the applicable zone specified in § 1045.515:

TABLE 1 TO § 1045.107—NTE MULTIPLIERS FOR CATALYST-EQUIPPED ENGINES

Pollutant	Subzone 1	Subzone 2
$HC+NO_X$	1.50	1.00
CO	N/A	1.00

(d) For two-stroke engines not equipped with a catalyst, use an NTE multiplier of 1.2 for $HC+NO_X$ and CO. Compare the weighted value specified in § 1045.515(c)(5) to the NTE standards specified in paragraph (b) of this section.

(e) For engines not covered by paragraphs (c) and (d) of this section, use

the NTE multipliers from the following table across the applicable zone specified in § 1045.515:

TABLE 2 TO § 1045.107—NTE MULTIPLIERS FOR FOUR-STROKE ENGINES WITHOUT CATALYSTS

Pollutant	Subzone 1	Subzone 2
$HC+NO_X$	1.40	1.60
CO	1.50	1.50

§ 1045.110 How must my engines diagnose malfunctions?

The following engine-diagnostic requirements apply for engines equipped with three-way catalysts and closed-loop control of air-fuel ratios:

(a) *Equip your engines with a diagnostic system.* Equip each engine with a diagnostic system that will detect significant malfunctions in its emission control system using one of the following protocols:

(1) If your emission control strategy depends on maintaining air-fuel ratios at stoichiometry, an acceptable diagnostic design would identify a malfunction whenever the air-fuel ratio does not cross stoichiometry for one minute of intended closed-loop operation. You may use other diagnostic strategies if we approve them in advance.

(2) If the protocol described in paragraph (a)(1) of this section does not apply to your engine, you must use an alternative approach that we approve in advance. Your alternative approach must generally detect when the emission control system is not functioning properly.

(3) Diagnostic systems approved by the California Air Resources Board for use with sterndrive/inboard engines fully satisfy the requirements of this section.

(b) *Use a malfunction indicator.* The malfunction indicator must be designed such that the operator can readily see or hear it; visible signals may be any color except red. Visible malfunction indicators must display ''Check Engine,'' ''Service Engine Soon,'' or a similar message that we approve. The malfunction indicator must go on under each of the following circumstances:

(1) When a malfunction occurs, as described in paragraph (a) of this section.

(2) When the diagnostic system cannot send signals to meet the requirement of paragraph (b)(1) of this section.

(3) When the engine's ignition is in the ''key-on'' position before starting or cranking. The malfunction indicator should turn off after engine starting if the system detects no malfunction.

(c) *Control when the malfunction can turn off.* If the malfunction indicator goes on to show a malfunction, it must remain on during all later engine operation until servicing corrects the malfunction. If the engine is not serviced, but the malfunction does not recur for three consecutive engine starts during which the malfunctioning system is evaluated and found to be working properly, the malfunction indicator may stay off during later engine operation.

(d) *Store trouble codes in computer memory.* Record and store in computer memory any diagnostic trouble codes showing a malfunction that should activate the malfunction indicator. The stored codes must identify the malfunctioning system or component as uniquely as possible. Make these codes available through the data link connector as described in paragraph (g) of this section. You may store codes for conditions that do not activate the malfunction indicator. The system must store a separate code to show when the diagnostic system is disabled (from malfunction or tampering).

(e) *Make data, access codes, and devices accessible.* Make all required data accessible to us without any access codes or devices that only you can supply. Ensure that anyone servicing your engine can read and understand the diagnostic trouble codes stored in the onboard computer with generic tools and information.

(f) *Consider exceptions for certain conditions.* Your diagnostic systems may disregard trouble codes for the first three minutes after engine starting. You may ask us to approve diagnostic-system designs that disregard trouble codes under other conditions that would produce an unreliable reading, damage systems or components, or cause other safety risks.

(g) *Follow standard references for formats, codes, and connections.* Follow conventions defined in SAE J1939–05

(incorporated by reference in § 1045.810) or ask us to approve using updated versions of (or variations from) this standard.

§ 1045.112 What are the standards for evaporative emissions?

Fuel systems must meet the evaporative emission requirements of 40 CFR part 1060 as specified in this section. These standards apply over a useful life period of five years for personal watercraft and ten years for all other vessels and for portable marine fuel tanks.

(a) *Fuel line permeation*. Nonmetal fuel lines must meet the permeation requirements specified in 40 CFR 1060.102 for EPA NRFL fuel lines as described in this paragraph (a).

(1) Except as specified in paragraphs (a)(2) and (3) of this section, the emission standard for fuel lines starts for vessels or portable marine fuel tanks with a date of manufacture on or after January 1, 2009.

(2) The emission standard for primer bulbs applies starting January 1, 2011.

(3) The emission standard for under-cowl fuel lines used with outboard engines apply over a phase-in period as specified in this paragraph (a)(3).

(i) Except as specified in paragraph (a)(3)(ii) of this section, the phase-in period is based on total length of fuel lines as specified in Table 1 to this section. For example, at least 30 percent of the length of under-cowl fuel lines used on your full lineup of 2010 model year outboard engines must meet the specified permeation standards. See § 1045.145(k) for administrative requirements related to this phase-in.

TABLE 1 TO § 1045.112—PHASE-IN SCHEDULE FOR UNDER-COWL FUEL LINES ON OUTBOARD ENGINES

Model year	Percentage phase-in
2010	30
2011	60
2012–2014	90
2015+	100

(ii) You may instead meet the permeation standards of this paragraph (a) by complying with the specified standards with 100 percent of your under-cowl fuel lines across your full lineup of 2011 model year outboard engines. In this case, the requirements of this part would not apply to under-cowl fuel lines before the 2011 model year. To use this option, you must notify the Designated Compliance Officer before December 31, 2009 of your intent to meet permeation standards on all your under-cowl fuel lines in the 2011 model year.

(b) *Tank permeation*. Fuel tanks must meet the permeation requirements specified in 40 CFR 1060.103. Portable marine fuel tanks must meet permeation standards starting January 1, 2011. Fuel tanks for personal watercraft must meet permeation standards starting in the 2011 model year. Other installed fuel tanks must meet permeation standards starting in the 2012 model year. Vessel manufacturers may generate or use emission credits to show compliance with the requirements of this paragraph under the averaging, banking, and trading (ABT) program, as described in subpart H of this part. Starting in the 2014 model year for personal watercraft and in the 2015 model year for other installed fuel tanks, family emission limits may not exceed 5.0 $g/m^2/day$ if testing occurs at a nominal temperature of 28 °C, or 8.3 $g/m^2/day$ if testing occurs at a nominal temperature of 40 °C. These FEL caps do not apply to fuel caps that are certified separately to meet permeation standards. Portable marine fuel tank manufacturers may not generate or use emission credits under subpart H of this part.

(c) *Running loss*. The running loss requirements specified in 40 CFR part 1060 do not apply.

(d) *Diurnal emissions*. Installed fuel tanks must meet the diurnal emission requirements specified in 40 CFR 1060.105. Fuel tanks for personal watercraft must meet diurnal emission standards starting in the 2010 model year. Other installed fuel tanks must meet diurnal emission standards for vessels produced on or after July 31, 2011, except as allowed by § 1045.625. Fuel tanks meeting the definition of *portable marine fuel tank* in § 1045.801 must comply with the diurnal requirements specified in 40 CFR part 1060 starting January 1, 2010.

(e) *Other requirements.* The requirements of 40 CFR 1060.101(e) and (f) apply to vessel manufacturers even if they do not obtain a certificate.

(f) *Engine manufacturers.* To the extent that engine manufacturers produce engines with fuel lines or fuel tanks, those fuel-system components must meet the requirements specified in this section. The timing of new standards is based on the date of manufacture of the engine.

§ 1045.115 What other requirements apply?

The following requirements apply with respect to engines that are required to meet the emission standards of this part:

(a) *Crankcase emissions.* Crankcase emissions may not be discharged directly into the ambient atmosphere from any engine throughout its useful life.

(b) *Torque broadcasting.* Starting in the 2013 model year, electronically controlled engines must broadcast their speed and output shaft torque (in newton-meters). Engines may alternatively broadcast a surrogate value for determining torque. Engines must broadcast engine parameters such that they can be read with a remote device, or broadcast them directly to their controller area networks. Your broadcasting protocol must allow for valid measurements using the field-testing procedures in 40 CFR part 1065, subpart J.

(c) *EPA access to broadcast information.* If we request it, you must provide us any hardware or tools we would need to readily read, interpret, and record all information broadcast by an engine's on-board computers and electronic control modules. If you broadcast a surrogate parameter for torque values, you must provide us what we need to convert these into torque units. We will not ask for hardware or tools if they are readily available commercially.

(d) *Altitude adjustments.* Engines must meet applicable emission standards for valid tests conducted under the ambient conditions specified in 40 CFR 1065.520. Engines must meet applicable emission standards at all specified atmospheric pressures, except that for atmospheric pressures below 94.0 kPa you may rely on an altitude kit for all testing if you meet the requirements specified in § 1054.205(s). If your rely on an altitude kit for certification, you must identify in the owners manual the altitude range for which you expect proper engine performance and emission control with and without the altitude kit; you must also state in the owners manual that operating the engine with the wrong engine configuration at a given altitude may increase its emissions and decrease fuel efficiency and performance.

(e) *Adjustable parameters.* Engines that have adjustable parameters must meet all the requirements of this part for any adjustment in the physically adjustable range. An operating parameter is not considered adjustable if you permanently seal it or if it is not normally accessible using ordinary tools. We may require that you set adjustable parameters to any specification within the adjustable range during any testing, including certification testing, production-line testing, or in-use testing.

(f) *Prohibited controls.* You may not design your engines with emission-control devices, systems, or elements of design that cause or contribute to an unreasonable risk to public health, welfare, or safety while operating. For example, this would apply if the engine emits a noxious or toxic substance it would otherwise not emit that contributes to such an unreasonable risk.

(g) *Defeat devices.* You may not equip your engines with a defeat device. A defeat device is an auxiliary emission control device that reduces the effectiveness of emission controls under conditions that the engine may reasonably be expected to encounter during normal operation and use. This does not apply for altitude kits installed or removed consistent with § 1045.655. This also does not apply to auxiliary emission control devices you identify in your application for certification if any of the following is true:

(1) The conditions of concern were substantially included in the applicable duty-cycle test procedures described in subpart F of this part.

(2) You show your design is necessary to prevent engine (or vessel) damage or

accidents. For example, you may design your engine to include emergency operating modes (sometimes known as limp-home operation) that would allow a vessel to return to land in the event of a malfunction even if such operating modes result in higher emissions.

(3) The reduced effectiveness applies only to starting the engine.

§ 1045.120 What emission-related warranty requirements apply to me?

(a) *General requirements.* You must warrant to the ultimate purchaser and each subsequent purchaser that the new engine, including all parts of its emission control system, meets two conditions:

(1) It is designed, built, and equipped so it conforms at the time of sale to the ultimate purchaser with the requirements of this part.

(2) It is free from defects in materials and workmanship that may keep it from meeting these requirements.

(b) *Warranty period.* Your emission-related warranty must be valid during the periods specified in this paragraph (b). You may offer an emission-related warranty more generous than we require. The emission-related warranty for an engine may not be shorter than any published warranty you offer without charge for that engine. Similarly, the emission-related warranty for any component may not be shorter than any published warranty you offer without charge for that component. If an engine has no hour meter, we base the warranty periods in this paragraph (b) only on the engine's age (in years). The warranty period begins when the engine is placed into service.

(1) The minimum warranty period for outboard engines is 175 hours of engine operation or 5 years, whichever comes first. The minimum warranty period for personal watercraft engines is 175 hours of engine operation or 30 months, whichever comes first.

(2) The minimum warranty period for sterndrive/inboard engines is shown in the following table:

TABLE 1 TO § 1045.120—WARRANTY PERIODS FOR STERNDRIVE/INBOARD ENGINES [1]

Engine type	Electronic components	Mechanical components
Conventional	3 years/480 hours	3 years/480 hours.
High-performance with maximum engine power at or below 485 kW.	3 years/480 hours	3 years/150 hours.
High-performance with maximum engine power above 485 kW	3 years/480 hours	1 year/50 hours.

[1] The warranty period expires after the specified time period or number of operating hours, whichever comes first.

(c) *Components covered.* The emission-related warranty covers all components whose failure would increase an engine's emissions of any regulated pollutant, including components listed in 40 CFR part 1068, Appendix I, and components from any other system you develop to control emissions. The emission-related warranty covers these components even if another company produces the component. Your emission-related warranty does not cover components whose failure would not increase an engine's emissions of any regulated pollutant.

(d) *Limited applicability.* You may deny warranty claims under this section if the operator caused the problem through improper maintenance or use, as described in 40 CFR 1068.115.

(e) *Owners manual.* Describe in the owners manual the emission-related warranty provisions from this section that apply to the engine.

§ 1045.125 What maintenance instructions must I give to buyers?

Give the ultimate purchaser of each new engine written instructions for properly maintaining and using the engine, including the emission control system as described in this section. The maintenance instructions also apply to service accumulation on your emission-data engines as described in § 1045.245 and in 40 CFR part 1065.

(a) *Critical emission-related maintenance.* Critical emission-related maintenance includes any adjustment, cleaning, repair, or replacement of critical emission-related components.

This may also include additional emission-related maintenance that you determine is critical if we approve it in advance. You may schedule critical emission-related maintenance on these components if you meet the following conditions:

(1) You demonstrate that the maintenance is reasonably likely to be done at the recommended intervals on in-use engines. We will accept scheduled maintenance as reasonably likely to occur if you satisfy any of the following conditions:

(i) You present data showing that any lack of maintenance that increases emissions also unacceptably degrades the engine's performance.

(ii) You present survey data showing that at least 80 percent of engines in the field get the maintenance you specify at the recommended intervals.

(iii) You provide the maintenance free of charge and clearly say so in your maintenance instructions.

(iv) You otherwise show us that the maintenance is reasonably likely to be done at the recommended intervals.

(2) You may not schedule critical emission-related maintenance within the useful life period for aftertreatment devices, pulse-air valves, fuel injectors, oxygen sensors, electronic control units, superchargers, or turbochargers, except as specified in paragraph (a)(3), (b), or (c) of this section.

(3) You may ask us to approve a maintenance interval shorter than that specified in paragraph (a)(2) of this section. In your request you must describe the proposed maintenance step, recommend the maximum feasible interval for this maintenance, include your rationale with supporting evidence to support the need for the maintenance at the recommended interval, and demonstrate that the maintenance will be done at the recommended interval on in-use engines. In considering your request, we will evaluate the information you provide and any other available information to establish alternate specifications for maintenance intervals, if appropriate.

(b) *Recommended additional maintenance.* You may recommend any additional amount of maintenance on the components listed in paragraph (a) of this section, as long as you state clearly that these maintenance steps are not necessary to keep the emission-related warranty valid. If operators do the maintenance specified in paragraph (a) of this section, but not the recommended additional maintenance, this does not allow you to disqualify those engines from in-use testing or deny a warranty claim. Do not take these maintenance steps during service accumulation on your emission-data engines.

(c) *Special maintenance.* You may specify more frequent maintenance to address problems related to special situations, such as atypical engine operation. You must clearly state that this additional maintenance is associated with the special situation you are addressing. We may disapprove your maintenance instructions if we determine that you have specified special maintenance steps to address engine operation that is not atypical, or that the maintenance is unlikely to occur in use. If we determine that certain maintenance items do not qualify as special maintenance under this paragraph (c), you may identify this as recommended additional maintenance under paragraph (b) of this section.

(d) *Noncritical emission-related maintenance.* Subject to the provisions of this paragraph (d), you may schedule any amount of emission-related inspection or maintenance that is not covered by paragraph (a) of this section (i.e., maintenance that is neither explicitly identified as critical emission-related maintenance, nor that we approve as critical emission-related maintenance). Noncritical emission-related maintenance generally includes changing spark plugs, re-seating valves, or any other emission-related maintenance on the components we specify in 40 CFR part 1068, Appendix I that is not covered in paragraph (a) of this section. You must state in the owners manual that these steps are not necessary to keep the emission-related warranty valid. If operators fail to do this maintenance, this does not allow you to disqualify those engines from in-use testing or deny a warranty claim. Do not take these inspection or maintenance steps during service accumulation on your emission-data engines.

(e) *Maintenance that is not emission-related.* For maintenance unrelated to emission controls, you may schedule any amount of inspection or maintenance. You may also take these inspection or maintenance steps during service accumulation on your emission-data engines, as long as they are reasonable and technologically necessary. This might include adding engine oil, changing air, fuel, or oil filters, servicing engine-cooling systems, and adjusting idle speed, governor, engine bolt torque, valve lash, or injector lash. You may perform this nonemission-related maintenance on emission-data engines at the least frequent intervals that you recommend to the ultimate purchaser (but not the intervals recommended for severe service).

(f) *Source of parts and repairs.* State clearly on the first page of your written maintenance instructions that a repair shop or person of the owner's choosing may maintain, replace, or repair emission control devices and systems. Your instructions may not require components or service identified by brand, trade, or corporate name. Also, do not directly or indirectly condition your warranty on a requirement that the engine be serviced by your franchised dealers or any other service establishments with which you have a commercial relationship. You may disregard the requirements in this paragraph (f) if you do one of two things:

(1) Provide a component or service without charge under the purchase agreement.

(2) Get us to waive this prohibition in the public's interest by convincing us the engine will work properly only with the identified component or service.

(g) *Payment for scheduled maintenance.* Owners are responsible for properly maintaining their engines. This generally includes paying for scheduled maintenance. However, manufacturers must pay for scheduled maintenance during the useful life if it meets all the following criteria:

(1) Each affected component was not in general use on similar engines before the applicable dates shown in paragraph (5) of the definition of *new propulsion marine engine* in § 1045.801.

(2) The primary function of each affected component is to reduce emissions.

(3) The cost of the scheduled maintenance is more than 2 percent of the price of the engine.

(4) Failure to perform the maintenance would not cause clear problems that would significantly degrade the engine's performance.

(h) *Owners manual.* Explain the owner's responsibility for proper maintenance in the owners manual.

[73 FR 59194, Oct. 8, 2008, as amended at 75 FR 23019, Apr. 30, 2010]

§ 1045.130 What installation instructions must I give to vessel manufacturers?

(a) If you sell an engine for someone else to install in a vessel, give the engine installer instructions for installing it consistent with the requirements of this part. Include all information necessary to ensure that an engine will be installed in its certified configuration.

(b) Make sure the instructions have the following information:

(1) Include the heading: ''Emission-related installation instructions''.

(2) State: ''Failing to follow these instructions when installing a certified engine in a vessel violates federal law (40 CFR 1068.105(b)), subject to fines or other penalties as described in the Clean Air Act.''

(3) Describe the instructions needed to properly install the exhaust system and any other components. Include instructions consistent with the requirements of § 1045.205(u) related to in-use measurement and the requirements of § 1045.655 related to altitude kits.

(4) Describe the steps needed to control evaporative emissions as described in § 1045.112. This will generally require notification that the installer and/or vessel manufacturer must meet the requirements of § 1045.112 and 40 CFR part 1060.

(5) Describe any necessary steps for installing the diagnostic system described in § 1045.110.

(6) Describe any limits on the range of applications needed to ensure that the engine operates consistently with your application for certification. For example, if your engines are certified

only for personal watercraft, tell vessel manufacturers not to install the engines in vessels longer than 4.0 meters.

(7) Describe any other instructions to make sure the installed engine will operate according to design specifications in your application for certification. For example, this may include specified limits for catalyst systems, such as exhaust backpressure, catalyst location, and temperature profiles during engine operation.

(8) State: ''If you install the engine in a way that makes the engine's emission control information label hard to read during normal engine maintenance, you must place a duplicate label on the vessel, as described in 40 CFR 1068.105.''

(c) You do not need installation instructions for engines you install in your own vessels.

(d) Provide instructions in writing or in an equivalent format. For example, you may post instructions on a publicly available Web site for downloading or printing. If you do not provide the instructions in writing, explain in your application for certification how you will ensure that each installer is informed of the installation requirements.

§ 1045.135 How must I label and identify the engines I produce?

The provisions of this section apply to engine manufacturers.

(a) Assign each engine a unique identification number and permanently affix, engrave, or stamp it on the engine in a legible way.

(b) At the time of manufacture, affix a permanent and legible label identifying each engine. The label must be—

(1) Attached in one piece so it is not removable without being destroyed or defaced.

(2) Secured to a part of the engine needed for normal operation and not normally requiring replacement.

(3) Durable and readable for the engine's entire life.

(4) Written in English.

(c) The label must—

(1) Include the heading ''EMISSION CONTROL INFORMATION''.

(2) Include your full corporate name and trademark. You may identify another company and use its trademark instead of yours if you comply with the provisions of § 1045.640.

(3) Include EPA's standardized designation for the engine family (and subfamily, where applicable).

(4) State the engine's displacement (in liters) and maximum engine power (in kW); however, you may omit the displacement from the label if all the engines in the engine family have the same per-cylinder displacement and total displacement.

(5) State the date of manufacture [DAY (optional), MONTH, and YEAR]; however, you may omit this from the label if you stamp, engrave, or otherwise permanently identify it elsewhere on the engine, in which case you must also describe in your application for certification where you will identify the date on the engine.

(6) State the FELs to which the engines are certified (in g/kW-hr) if certification depends on the ABT provisions of subpart H of this part.

(7) Identify the emission control system. Use terms and abbreviations as described in 40 CFR 1068.45. You may omit this information from the label if there is not enough room for it and you put it in the owners manual instead.

(8) List specifications and adjustments for engine tuneups; however, you may omit this information from the label if there is not enough room for it and you put it in the owners manual instead.

(9) Identify the fuel type and any requirements for fuel and lubricants; however, you may omit this information from the label if there is not enough room for it and you put it in the owners manual instead.

(10) State: ''THIS MARINE ENGINE COMPLIES WITH U.S. EPA EXHAUST REGULATIONS FOR [MODEL YEAR].''

(11) If your durability demonstration for sterndrive/inboard engines is limited to fresh water, state: ''THIS ENGINE IS NOT INTENDED FOR USE IN SALTWATER.''

(d) You may add information to the emission control information label as follows:

(1) You may identify other emission standards that the engine meets or does not meet (such as California

standards). You may include this information by adding it to the statement we specify or by including a separate statement.

(2) You may add other information to ensure that the engine will be properly maintained and used.

(3) You may add appropriate features to prevent counterfeit labels. For example, you may include the engine's unique identification number on the label.

(e) You may ask us to approve modified labeling requirements in this part 1045 if you show that it is necessary or appropriate. We will approve your request if your alternate label is consistent with the requirements of this part.

(f) If you obscure the engine label while installing the engine in the vessel such that the label cannot be read during normal maintenance, you must place a duplicate label on the vessel. If others install your engine in their vessels in a way that obscures the engine label, we require them to add a duplicate label on the vessel (see 40 CFR 1068.105); in that case, give them the number of duplicate labels they request and keep the following records for at least five years:

(1) Written documentation of the request from the vessel manufacturer.

(2) The number of duplicate labels you send for each engine family and the date you sent them.

§ 1045.140 What is my engine's maximum engine power?

(a) An engine configuration's maximum engine power is the maximum brake power point on the nominal power curve for the engine configuration, as defined in this section. Round the power value to the nearest whole kilowatt for engines above 30 kW and to the nearest 0.1 kilowatt for engines at or below 30 kW.

(b) The nominal power curve of an engine configuration is the relationship between maximum available engine brake power and engine speed for an engine, using the mapping procedures of 40 CFR part 1065, based on the manufacturer's design and production specifications for the engine. This information may also be expressed by a torque curve that relates maximum available engine torque with engine speed.

(c) The nominal power curve must be within the range of the actual power curves of production engines considering normal production variability. If after production begins it is determined that your nominal power curve does not represent production engines, we may require you to amend your application for certification under § 1045.225.

(d) Maximum engine power for an engine family is generally the weighted average value of maximum engine power of each engine configuration within the engine family based on your total U.S.-directed production volume of engines you produce from the engine family. However, alternative approaches for defining an engine family's maximum engine power apply in the following circumstances:

(1) For outboard or personal watercraft engines for which you neither generate nor use emission credits, you may identify the greatest value for maximum engine power from all the different configurations within the engine family to determine the appropriate emission standard under § 1045.103.

(2) For high-performance engines, you must use the smallest value for maximum engine power from all the different configurations within the engine family to determine the standards and other requirements that apply under this subpart B.

[73 FR 59194, Oct. 8, 2008, as amended at 75 FR 23019, Apr. 30, 2010]

§ 1045.145 Are there interim provisions that apply only for a limited time?

The provisions in this section apply instead of other provisions in this part. This section describes how and when these interim provisions apply.

(a) *Small-volume engine manufacturers.* Special provisions apply to you for sterndrive/inboard engines if you are a small-volume engine manufacturer subject to the requirements of this part. You may delay complying with emission standards and other requirements that would otherwise apply until the 2011 model year for conventional sterndrive/inboard engines and until

the 2013 model year for high-performance engines. For an engine to be exempt under this paragraph (a), you must contact us before January 1, 2011 or before you introduce such engines into U.S. commerce, whichever comes first. Add a permanent label to a readily visible part of each engine exempted under this paragraph (a). This label must include at least the following items:

(1) The label heading ''EMISSION CONTROL INFORMATION''.

(2) Your corporate name and trademark.

(3) Engine displacement (in liters), rated power, and model year of the engine or whom to contact for further information.

(4) The following statement: ''THIS ENGINE IS EXEMPT UNDER 40 CFR 1045.145(a) FROM EMISSION STANDARDS AND RELATED REQUIREMENTS.''

(b) *Early banking.* You may generate exhaust emission credits for conventional sterndrive/inboard engines before the 2010 model year (or before the 2011 model year for small-volume engine manufacturers) as follows:

(1) You must begin actual production of early-compliant engines by September 1, 2009 (or before September 1, 2010 for small-volume engine manufacturers).

(2) You may not generate emission credits under this paragraph (b) with engines you produce after December 31, 2009 (or December 31, 2010 for small-volume engine manufacturers).

(3) Early-compliant engines must be certified to the standards and requirements for conventional sterndrive/inboard engines under this part 1045, with all family emission limits at or below the specified emission standards.

(4) Calculate emission credits by setting STD equal to 16 g/kW-hr for $HC+NO_X$ and 150 g/kW-hr for CO (see § 1045.705).

(5) Small-volume engine manufacturers may calculate emission credits using a multiplier based on the number of model years before the 2011 model year. The multipliers are 1.25 for one year early, 1.5 for two years early, and 2.0 for three years early. For example, multiply your calculated emission credits generated from compliant 2009 model year engines by 1.5.

(6) You may not use the provisions of this paragraph (b) to generate emission credits for engines whose point of first retail sale is in California.

(7) $HC+NO_X$ or CO credits you generate under this paragraph (b) may not be used after the 2012 model year (or the 2013 model year for small-volume engine manufacturers).

(c) *Assigned emission factors.* Through the 2013 model year, small-volume engine manufacturers may establish emission levels for certification without testing for conventional four-stroke sterndrive/inboard engines by selecting a family emission limit of 22.0 g/kW-hr for $HC+NO_X$ emissions and 150 g/kW-hr for CO emissions. Note that you must use emission credits under the provisions of subpart H of this part to show that you meet applicable requirements if you use these family emission limits. Also, if you use these family emission limits, you must use them for both $HC+NO_X$ and CO emissions.

(d) *Early compliance with evaporative emission standards.* You may sell or install fuel tanks that do not meet the specified permeation standards without violating the prohibition in 40 CFR 1068.101(a)(1) if you earn evaporative emission allowances, as follows:

(1) You may earn an evaporative emission allowance from one fuel tank certified to EPA's evaporative emission standards by producing it before EPA's evaporative emission standards start to apply. You may use this evaporative emission allowance by selling one fuel tank that does not meet the specified permeation emission standards. For example, you can earn an evaporative emission allowance by selling a low-permeation fuel tank for personal watercraft before the 2011 model year, in which case you could sell a high-permeation fuel tank for a personal watercraft in 2011. You must meet all the other requirements related to evaporative emissions that apply for fuel tanks covered by an EPA certificate of conformity.

(2) You must add a label to exempted fuel tanks you produce under this paragraph (d) with the following statement:

''EXEMPT FROM EMISSION STANDARDS UNDER 40 CFR 1045.145(d)''.

(3) Evaporative emission allowances you earn under this paragraph (d) from portable marine fuel tanks may be used only for other portable marine fuel tanks. Similarly, evaporative emission allowances from personal watercraft fuel tanks may be used only for personal watercraft fuel tanks and evaporative emission allowances from other installed fuel tanks may be used only for other installed fuel tanks.

(4) You may not use the allowances you generate under this paragraph (d) for portable marine fuel tanks and personal watercraft fuel tanks in 2014 or later model years. Similarly, you may not use the allowances you generate under this paragraph (d) for other installed fuel tanks in 2015 or later model years.

(5) Send the Designated Compliance Officer the following information for each year in which you use the provisions of this paragraph (d):

(i) Send us a report within 45 days after the end of the model year describing how many pieces of equipment you produced in the preceding model year that generate allowances. You may combine this with the reports specified in § 1045.250(a) if applicable.

(ii) Describe the number of equipment using allowances under this paragraph (d) in your end-of-year reports and final reports after the end of the model year as described in § 1045.730(a). If you do not participate in averaging, banking, and trading program, send this information separately within 90 days after the end of the model year.

(e) *Useful life for evaporative emission standards.* A useful life period of two years applies for fuel tanks certified to meet the permeation emission standards in § 1045.112(b) in 2013 and earlier model years. However, for fuel tanks with a family emission limit above or below the specified emission standard, calculate emission credits under § 1045.706 based on the useful life values specified in § 1045.112.

(f) *Delayed FEL caps for stand-up personal watercraft.* The FEL caps specified in § 1045.103(b) do not apply in the 2010 and 2011 model years for personal watercraft that are designed for operation from a standing position.

(g) *Delayed compliance with not-to-exceed emission standards.* The not-to-exceed standards specified in § 1045.107 do not apply in the 2010 through 2012 model years for engine families that are certified based on carryover emission data from the 2009 model year. This includes models that were certified only in California, as long as no new testing is otherwise required to get a new certificate.

(h) *Carryover of California ARB emission data.* The provisions of 40 CFR 1065.10(c)(5) allow for the use of emission data generated for the California Air Resources Board as the basis for EPA certification. For sterndrive/inboard engines certified in California before the 2010 model year, you may use such emission data as the basis for meeting the standards of § 1045.105, as long as you meet the conditions specified in § 1045.235(d).

(i) *Hardship for obsolete engines.* We have made the determination under 40 CFR 1068.255 that secondary engine manufacturers may use the hardship exemption to sell uncertified 4.3-liter and 8.1-liter engines from General Motors in the 2010 model year. These engines are exempt without request. You must label the engines as specified in 40 CFR 1068.255(b).

(j) *Adjusted NTE subzones for noncatalyzed four-stroke engines.* For supercharged four-stroke outboard engines above 150 kW without catalysts, you may divide the NTE zone specified in § 1045.515(c)(6) based on a speed cutpoint of 70 percent of maximum test speed instead of 50 percent of maximum test speed through the 2014 model year.

(k) *Averaging for under-cowl fuel lines.* Section 1045.112 specifies phased-in standards for under-cowl fuel lines for 2010 through 2014 model years, subject to the following provisions:

(1) You must comply with these requirements based on total lengths of compliant and noncompliant fuel lines. For each model year, calculate the percentage of compliant under-cowl fuel line by adding up the length of under-cowl fuel line certified to meet the applicable permeation standards and dividing this sum by the total length of under-cowl fuel line from all your outboard engines. You may count a fuel line as compliant only if you certify

that its emission levels will be at or below the specified standard throughout the useful life.

(2) In your application for certification for each outboard engine family, identify the part numbers, descriptions, and locations of all the compliant fuel lines. You must include a drawing of any fuel lines in addition to the description if that is necessary for us to find which fuel lines you intend to be certified. Your descriptions must include the lengths of compliant and noncompliant fuel lines for each engine, including aggregated lengths for the whole set of fuel lines used on an engine. If the engine family includes noncompliant fuel lines, you must also include a statement that you will have enough compliant fuel lines to meet the phase-in requirements and provide detailed calculations to support your statement.

(3) Send the Designated Compliance Officer end-of-year reports and final reports after the end of each model year that you use noncompliant fuel lines as described in §1045.730(a). Include the production volumes with a point of retail sale in the United States, as described in §§1045.701(j). State your production volumes in terms of total engine sales by model and in terms of total lengths of compliant and noncompliant fuel lines. If a single engine family includes configurations with different lengths of compliant or noncompliant fuel lines, count each configuration separately. If you changed your designs during the model year in a way that affects these compliance calculations, identify the actual production volumes associated with each unique design.

(4) Keep a copy of the reports we require in this paragraph (k) until December 31, 2022 as described in §1045.735(b). We may require you to keep additional records or to send us relevant information not required by this paragraph (k), as allowed under the Clean Air Act.

(5) Label your compliant low-permeation fuel lines as specified in §1060.137. Any fuel line observed without a complete identification as specified in §1060.137 will be considered noncompliant. In addition, for each model year in which you use noncompliant fuel lines, you must include one of the following statements on the engine label described in §1045.135:

(i) ''LOW-PERM/HIGH-PERM = [x/y]'', where x is the percentage of low-permeation under-cowl fuel line and y is the percentage of high-permeation under-cowl fuel line (x and y must sum to 100).

(ii) ''LOW-PERM = [x mm]; HIGH-PERM = [y mm]'', where x is the length of low-permeation under-cowl fuel line and y is the length of high-permeation under-cowl fuel line, in mm.

(l) [Reserved]

(m) *Delayed labeling for fuel lines.* You may omit fuel-line labeling requirements specified in 40 CFR part 1060 in the 2009 model year.

(n) *Continued use of 40 CFR part 91 test procedures.* You may continue to use the test procedures in 40 CFR part 91 instead of those in subpart F of this part for 2010 through 2012 model year outboard and personal watercraft engines. This applies for certification, production-line, and in-use testing. You may continue to use test data based on the test procedures in 40 CFR part 91 for engine families in 2013 and later model years, provided that we allow you to use carryover emission data under 40 CFR 1045.235(d) for your engine family. You may also use the test procedures in 40 CFR part 91 for production-line testing with any engine family whose certification is based on testing with those procedures.

(o) *Banking early credits for jet boat engines.* Banked emission credits that were originally generated from outboard and personal watercraft engines under 40 CFR part 91 may be used to certify jet boat engines under the provisions §1045.660.

[73 FR 59194, Oct. 8, 2008, as amended at 75 FR 23019, Apr. 30, 2010; 75 FR 68462, Nov. 8, 2010]

Subpart C—Certifying Engine Families

§1045.201 What are the general requirements for obtaining a certificate of conformity?

Engine manufacturers must certify their engines with respect to the exhaust emission standards in this part. Manufacturers of engines, equipment, or fuel-system components may need

to certify their products with respect to evaporative emission standards as described in 40 CFR 1060.1 and 1060.601. The following general requirements apply for obtaining a certificate of conformity:

(a) You must send us a separate application for a certificate of conformity for each engine family. A certificate of conformity is valid starting with the indicated effective date but it is not valid for any production after December 31 of the model year for which it is issued. No certificate will be issued after December 31 of the model year.

(b) The application must contain all the information required by this part and must not include false or incomplete statements or information (see § 1045.255).

(c) We may ask you to include less information than we specify in this subpart as long as you maintain all the information required by § 1045.250.

(d) You must use good engineering judgment for all decisions related to your application (see 40 CFR 1068.5).

(e) An authorized representative of your company must approve and sign the application.

(f) See § 1045.255 for provisions describing how we will process your application.

(g) We may require you to deliver your test engines to a facility we designate for our testing (see § 1045.235(c)).

(h) For engines that become new after being placed into service, such as engines installed on imported vessels or engines converted to run on a different fuel, we may specify alternate certification provisions consistent with the intent of this part. *See* § 1045.645 and the definition of ''new propulsion marine engine'' in § 1045.801.

[73 FR 59194, Oct. 8, 2008, as amended at 75 FR 23019, Apr. 30, 2010]

§ 1045.205 What must I include in my application?

This section specifies the information that must be in your application, unless we ask you to include less information under § 1045.201(c). We may require you to provide additional information to evaluate your application.

(a) Describe the engine family's specifications and other basic parameters of the engine's design and emission controls. List the fuel type on which your engines are designed to operate (for example, all-season gasoline). List each distinguishable engine configuration in the engine family. For each engine configuration, list the maximum engine power and the range of values for maximum engine power resulting from production tolerances, as described in § 1045.140. Describe why your engines qualify as high-performance engines, if applicable.

(b) Explain how the emission control systems operate. Describe in detail all system components for controlling exhaust emissions, including all auxiliary emission control devices (AECDs) and all fuel-system components you will install on any production or test engine. Identify the part number of each component you describe. For this paragraph (b), treat as separate AECDs any devices that modulate or activate differently from each other. Include sufficient detail to allow us to evaluate whether the AECDs are consistent with the defeat device prohibition of § 1045.115.

(c) Explain how the engine diagnostic system works, if applicable, describing especially the engine conditions (with the corresponding diagnostic trouble codes) that cause the malfunction indicator to go on. Propose the conditions under which the diagnostic system should disregard trouble codes, as described in § 1045.110(f).

(d) Describe the engines you selected for testing and the reasons for selecting them.

(e) Describe the test equipment and procedures that you used, including any special or alternate test procedures you used.

(f) Describe how you operated the emission-data engine before testing, including the duty cycle and the number of engine operating hours used to stabilize emission levels. Explain why you selected the method of service accumulation. Describe any scheduled maintenance you did.

(g) List the specifications of the test fuel to show that it falls within the required ranges we specify in 40 CFR part 1065.

(h) Identify the engine family's useful life.

(i) Include the maintenance and warranty instructions you will give to the ultimate purchaser of each new engine (see §§ 1045.120 and 1045.125).

(j) Include the emission-related installation instructions you will provide if someone else installs your engines in a vessel (see § 1045.130).

(k) Describe your emission control information label (see § 1045.135).

(l) Identify the emission standards or FELs to which you are certifying engines in the engine family.

(m) Identify the engine family's deterioration factors and describe how you developed them (see § 1045.245). Present any emission test data you used for this.

(n) State that you operated your emission-data engines as described in the application (including the test procedures, test parameters, and test fuels) to show you meet the requirements of this part.

(o) Present emission data to show that you meet emission standards, as follows:

(1) Present emission data by mode for hydrocarbons (such as THC or THCE, as applicable), NO_X, and CO on an emission-data engine to show your engines meet the duty-cycle emission standards we specify in §§ 1045.103(a) and 1045.105(a). Show weighted emission figures before and after applying deterioration factors for each engine. If we specify more than one grade of any fuel type (for example, low-temperature and all-season gasoline), you need to submit test data only for one grade, unless the regulations of this part specify otherwise for your engine.

(2) Note that §§ 1045.235 and 1045.245 allow you to submit an application in certain cases without new emission data.

(p) State that all the engines in the engine family comply with the not-to-exceed emission standards we specify in subpart B of this part for all normal operation and use when tested as specified in § 1045.515, if applicable. Describe any relevant testing, engineering analysis, or other information in sufficient detail to support your statement.

(q) Report test results as follows:

(1) Report all test results involving measurement of pollutants for which emission standards apply. Include test results from invalid tests or from any other tests, whether or not they were conducted according to the test procedures of subpart F of this part. We may ask you to send other information to confirm that your tests were valid under the requirements of this part and 40 CFR parts 1060 and 1065.

(2) Report measured CO_2, N_2O, and CH_4 as described in § 1045.235. Small-volume engine manufacturers may omit reporting N_2O and CH_4.

(r) Describe all adjustable operating parameters (see § 1045.115(e)), including production tolerances. Include the following in your description of each parameter:

(1) The nominal or recommended setting.

(2) The intended physically adjustable range.

(3) The limits or stops used to establish adjustable ranges.

(4) Information showing why the limits, stops, or other means of inhibiting adjustment are effective in preventing adjustment of parameters on in-use engines to settings outside your intended physically adjustable ranges.

(s) Describe how your engines comply with emission standards at varying atmospheric pressures. Include a description of altitude kits you design to comply with the requirements of § 1045.115(d). Identify the part number of each component you describe. Identify the altitude range for which you expect proper engine performance and emission control with and without the altitude kit. State that your engines will comply with applicable emission standards throughout the useful life with the altitude kit installed according to your instructions. Describe any relevant testing, engineering analysis, or other information in sufficient detail to support your statement. In addition, describe your plan for making information and parts available such that you would reasonably expect that altitude kits would be widely used in the high-altitude counties specified in 40 CFR part 1068, Appendix III. For example, engine owners should have ready access to information describing when an altitude kit is needed and how to obtain this service. Similarly, parts and service information should be available to qualified service facilities

in addition to authorized service centers if that is needed for owners to have such altitude kits installed locally.

(t) Provide the information needed to read, record, and interpret all the information broadcast by an engine's onboard computers and electronic control units. State that, upon request, you will give us any hardware, software, or tools we would need to do this. If you broadcast a surrogate parameter for torque values, you must provide us what we need to convert these into torque units. You may reference any appropriate publicly released standards that define conventions for these messages and parameters. Format your information consistent with publicly released standards.

(u) Confirm that your emission-related installation instructions specify how to ensure that sampling of exhaust emissions will be possible after engines are installed in vessels and placed in service. Show how to sample exhaust emissions in a way that prevents diluting the exhaust sample with ambient air.

(v) Unconditionally certify that all the engines in the engine family comply with the requirements of this part, other referenced parts of the CFR, and the Clean Air Act.

(w) Include good-faith estimates of U.S.-directed production volumes. Include a justification for the estimated production volumes if they are substantially different than actual production volumes in earlier years for similar models.

(x) Include the information required by other subparts of this part. For example, include the information required by §1045.725 if you participate in the ABT program.

(y) Include other applicable information, such as information specified in this part or 40 CFR part 1068 related to requests for exemptions.

(z) Name an agent for service located in the United States. Service on this agent constitutes service on you or any of your officers or employees for any action by EPA or otherwise by the United States related to the requirements of this part.

(aa) For imported engines, identify the following:

(1) The port(s) at which you have imported engines over the previous 12 months.

(2) The names and addresses of the agents you have authorized to import your engines.

(3) The location of a test facility in the United States where you can test your engines if we select them for testing under a selective enforcement audit, as specified in 40 CFR part 1068, subpart E.

[73 FR 59194, Oct. 8, 2008, as amended at 73 FR 73789, Dec. 4, 2008; 74 FR 56509, Oct. 30, 2009]

§1045.210 May I get preliminary approval before I complete my application?

If you send us information before you finish the application, we will review it and make any appropriate determinations, especially for questions related to engine family definitions, auxiliary emission control devices, deterioration factors, testing for service accumulation, maintenance, and compliance with not-to-exceed standards. Decisions made under this section are considered to be preliminary approval, subject to final review and approval. We will generally not reverse a decision where we have given you preliminary approval, unless we find new information supporting a different decision. If you request preliminary approval related to the upcoming model year or the model year after that, we will make the appropriate determinations as soon as practicable. We will generally not provide preliminary approval related to a future model year more than two years ahead of time.

§1045.220 How do I amend the maintenance instructions in my application?

You may amend your emission-related maintenance instructions after you submit your application for certification as long as the amended instructions remain consistent with the provisions of §1045.125. You must send the Designated Compliance Officer a written request to amend your application for certification for an engine family if you want to change the emission-related maintenance instructions in a way that could affect emissions. In your request, describe the proposed

changes to the maintenance instructions. If operators follow the original maintenance instructions rather than the newly specified maintenance, this does not allow you to disqualify those engines from in-use testing or deny a warranty claim.

(a) If you are decreasing or eliminating any specified maintenance, you may distribute the new maintenance instructions to your customers 30 days after we receive your request, unless we disapprove your request. This would generally include replacing one maintenance step with another. We may approve a shorter time or waive this requirement.

(b) If your requested change would not decrease the specified maintenance, you may distribute the new maintenance instructions anytime after you send your request.

(c) You need not request approval if you are making only minor corrections (such as correcting typographical mistakes), clarifying your maintenance instructions, or changing instructions for maintenance unrelated to emission control. We may ask you to send us copies of maintenance instructions revised under this paragraph (c).

[73 FR 59194, Oct. 8, 2008, as amended at 75 FR 23019, Apr. 30, 2010]

§ 1045.225 How do I amend my application for certification to include new or modified engines or change an FEL?

Before we issue you a certificate of conformity, you may amend your application to include new or modified engine configurations, subject to the provisions of this section. After we have issued your certificate of conformity, you may send us an amended application requesting that we include new or modified engine configurations within the scope of the certificate, subject to the provisions of this section. You must amend your application if any changes occur with respect to any information included in your application.

(a) You must amend your application before you take any of the following actions:

(1) Add an engine configuration to an engine family. In this case, the engine configuration added must be consistent with other engine configurations in the engine family with respect to the criteria listed in § 1045.230.

(2) Change an engine configuration already included in an engine family in a way that may affect emissions, or change any of the components you described in your application for certification. This includes production and design changes that may affect emissions any time during the engine's lifetime.

(3) Modify an FEL for an engine family as described in paragraph (f) of this section.

(b) To amend your application for certification, send the Designated Compliance Officer the following information:

(1) Describe in detail the addition or change in the engine model or configuration you intend to make.

(2) Include engineering evaluations or data showing that the amended engine family complies with all applicable requirements. You may do this by showing that the original emission-data engine is still appropriate for showing that the amended family complies with all applicable requirements.

(3) If the original emission-data engine for the engine family is not appropriate to show compliance for the new or modified engine configuration, include new test data showing that the new or modified engine configuration meets the requirements of this part.

(c) We may ask for more test data or engineering evaluations. You must give us these within 30 days after we request them.

(d) For engine families already covered by a certificate of conformity, we will determine whether the existing certificate of conformity covers your newly added or modified engine. You may ask for a hearing if we deny your request (see § 1045.820).

(e) For engine families already covered by a certificate of conformity, you may start producing the new or modified engine configuration anytime after you send us your amended application and before we make a decision under paragraph (d) of this section. However, if we determine that the affected engines do not meet applicable requirements, we will notify you to cease production of the engines and may require

you to recall the engines at no expense to the owner. Choosing to produce engines under this paragraph (e) is deemed to be consent to recall all engines that we determine do not meet applicable emission standards or other requirements and to remedy the nonconformity at no expense to the owner. If you do not provide information required under paragraph (c) of this section within 30 days after we request it, you must stop producing the new or modified engines.

(f) You may ask us to approve a change to your FEL in certain cases after the start of production. The changed FEL may not apply to engines you have already introduced into U.S. commerce, except as described in this paragraph (f). If we approve a changed FEL after the start of production, you must include the new FEL on the emission control information label for all engines produced after the change. You may ask us to approve a change to your FEL in the following cases:

(1) You may ask to raise your FEL for your engine family at any time. In your request, you must show that you will still be able to meet the emission standards as specified in subparts B and H of this part. If you amend your application by submitting new test data to include a newly added or modified engine, as described in paragraph (b)(3) of this section, use the appropriate FELs with corresponding production volumes to calculate emission credits for the model year, as described in subpart H of this part. In all other circumstances, you must use the higher FEL for the entire family to calculate emission credits under subpart H of this part.

(2) You may ask to lower the FEL for your engine family only if you have test data from production engines showing that emissions are below the proposed lower FEL. The lower FEL applies only to engines you produce after we approve the new FEL. Use the appropriate FELs with corresponding production volumes to calculate emission credits for the model year, as described in subpart H of this part.

§ 1045.230 How do I select engine families?

(a) For purposes of certification, divide your product line into families of engines that are expected to have similar emission characteristics throughout their useful life as described in this section. Your engine family is limited to a single model year.

(b) Group engines into the same engine family if they are the same in all the following aspects:

(1) The combustion cycle and fuel. See paragraph (e) of this section for special provisions that apply for dual-fuel engines.

(2) Method of air aspiration (for example, turbocharged vs. naturally aspirated).

(3) The number, location, volume, and composition of catalytic converters.

(4) The number, arrangement (such as in-line or vee configuration), and approximate bore diameter of cylinders.

(5) Method of control for engine operation, other than governing (i.e., mechanical or electronic).

(6) The numerical level of the applicable emission standards. For example, an engine family may not include engines certified to different family emission limits, though you may change family emission limits without recertifying as specified in § 1045.225.

(c) You may subdivide a group of engines that is identical under paragraph (b) of this section into different engine families if you show the expected emission characteristics are different during the useful life.

(d) You may group engines that are not identical with respect to the things listed in paragraph (b) of this section into the same engine family, as follows:

(1) In unusual circumstances, you may group such engines into the same engine family if you show that their emission characteristics during the useful life will be similar.

(2) If you are a small-volume engine manufacturer, you may group all your high-performance engines into a single engine family.

(3) The provisions of this paragraph (e) do not exempt any engines from meeting all the emission standards and requirements in subpart B of this part.

(e) You may certify dual-fuel or flexible-fuel engines in a single engine family. You may include dedicated-fuel versions of this same engine model in the same engine family, as long as they are identical to the engine configuration with respect to that fuel type for the dual-fuel or flexible-fuel version of the engine. For example, if you produce an engine that can alternately run on gasoline and natural gas, you can include the gasoline-only and natural gas-only versions of the engine in the same engine family as the dual-fuel engine if engine operation on each fuel type is identical with or without installation of components for operating on the other fuel.

[73 FR 59194, Oct. 8, 2008, as amended at 75 FR 23019, Apr. 30, 2010]

§ 1045.235 What emission testing must I perform for my application for a certificate of conformity?

This section describes the emission testing you must perform to show compliance with the emission standards in §§ 1045.103 and 1045.105. See § 1045.205(p) regarding emission testing related to the not-to-exceed standards. See §§ 1045.240 and 1045.245 and 40 CFR part 1065, subpart E, regarding service accumulation before emission testing.

(a) Select an emission-data engine from each engine family for testing as described in 40 CFR 1065.401. Select the engine with a configuration that is most likely to exceed the exhaust emission standards, using good engineering judgment. Consider the emission levels of all exhaust constituents over the full useful life of the engine when operated in a vessel.

(b) Test your emission-data engines using the procedures and equipment specified in subpart F of this part. In the case of dual-fuel engines, measure emissions when operating with each type of fuel for which you intend to certify the engine. In the case of flexible-fuel engines, measure emissions when operating with the fuel mixture that is most likely to cause the engine to exceed the applicable $HC+NO_x$ emission standard, though you may ask us to exclude fuel mixtures that you can show are not likely to occur in use.

(c) We may measure emissions from any of your emission-data engines or other engines from the engine family, as follows:

(1) We may decide to do the testing at your plant or any other facility. If we do this, you must deliver the engine to a test facility we designate. The engine you provide must include appropriate manifolds, aftertreatment devices, electronic control units, and other emission-related components not normally attached directly to the engine block. If we do the testing at your plant, you must schedule it as soon as possible and make available the instruments, personnel, and equipment we need.

(2) If we measure emissions on one of your engines, the results of that testing become the official emission results for the engine. Unless we later invalidate these data, we may decide not to consider your data in determining if your engine family meets applicable requirements.

(3) We may set the adjustable parameters of your engine to any point within the physically adjustable ranges (see § 1045.115(e)).

(4) We may calibrate your engine within normal production tolerances for anything we do not consider an adjustable parameter. For example, this would apply where we determine that an engine parameter is not an adjustable parameter (as defined in § 1045.801) but that it is subject to production variability.

(d) You may ask to use carryover emission data from a previous model year instead of doing new tests, but only if all the following are true:

(1) The engine family from the previous model year differs from the current engine family only with respect to model year or other characteristics unrelated to emissions.

(2) The emission-data engine from the previous model year remains the appropriate emission-data engine under paragraph (b) of this section.

(3) The data show that the emission-data engine would meet all the requirements that apply to the engine family covered by the application for certification. For engines originally tested under the provisions of 40 CFR part 91, you may consider those test procedures to be equivalent to the procedures we specify in subpart F of this part.

(e) We may require you to test another engine of the same or different configuration in addition to the engine(s) tested under paragraph (b) of this section.

(f) If you use an alternate test procedure under 40 CFR 1065.10 and later testing shows that such testing does not produce results that are equivalent to the procedures specified in subpart F of this part, we may reject data you generated using the alternate procedure.

(g) Measure CO_2 and CH_4 with each low-hour certification test using the procedures specified in 40 CFR part 1065 starting in the 2011 and 2012 model years, respectively. Also measure N_2O with each low-hour certification test using the procedures specified in 40 CFR part 1065 starting in the 2013 model year for any engine family that depends on NO_X aftertreatment to meet emission standards. Small-volume engine manufacturers may omit measurement of N_2O and CH_4. These measurements are not required for NTE testing. Use the same units and modal calculations as for your other results to report a single weighted value for each constituent. Round the final values as follows:

(1) Round CO_2 to the nearest 1 g/kW-hr.

(2) Round N_2O to the nearest 0.001 g/kW-hr.

(3) Round CH_4 to the nearest 0.001 g/kW-hr.

[73 FR 59194, Oct. 8, 2008, as amended at 74 FR 56510, Oct. 30, 2009]

§ 1045.240 How do I demonstrate that my engine family complies with exhaust emission standards?

(a) For purposes of certification, your engine family is considered in compliance with the duty-cycle emission standards in § 1045.103 or § 1045.105 if all emission-data engines representing that family have test results showing official emission results and deteriorated emission levels at or below these standards. This also applies for all test points for emission-data engines within the family used to establish deterioration factors. Note that your FELs are considered to be the applicable emission standards with which you must comply if you participate in the ABT program in subpart H of this part. *See* paragraph (e) of this section for provisions related to demonstrating compliance with NTE standards.

(b) Your engine family is deemed not to comply with the duty-cycle emission standards in § 1045.103 or § 1045.105 if any emission-data engine representing that family has test results showing an official emission result or a deteriorated emission level for any pollutant that is above an applicable emission standard. Similarly, your engine family is deemed not to comply if any emission-data engine representing that family has test results showing any emission level above the applicable not-to-exceed emission standard for any pollutant. This also applies for all test points for emission-data engines within the family used to establish deterioration factors.

(c) Determine a deterioration factor to compare emission levels from the emission-data engine with the applicable emission standards. Section 1045.245 specifies how to test engines to develop deterioration factors that represent the expected deterioration in emissions over your engines' full useful life. Your deterioration factors must take into account any available data from in-use testing with similar engines. You may ask us to give you an assigned deterioration factor for your high-performance engines. Small-volume engine manufacturers may use assigned deterioration factors that we establish for any engine families certified under this part. Apply deterioration factors as follows:

(1) *Additive deterioration factor for exhaust emissions.* For engines that do not use aftertreatment technology, use an additive deterioration factor for exhaust emissions. An additive deterioration factor is the difference between exhaust emissions at the end of useful life and exhaust emissions at the low-hour test point. Adjust the official emission results for each tested engine at the selected test point by adding the factor to the measured emissions. If the deterioration factor is less than zero, use zero. Additive deterioration factors must be specified to one more decimal place than the emission standard.

(2) *Multiplicative deterioration factor for exhaust emissions.* For engines that use aftertreatment technology, such as catalytic converters, use a multiplicative deterioration factor for exhaust emissions. A multiplicative deterioration factor is the ratio of exhaust emissions at the end of useful life to exhaust emissions at the low-hour test point. Adjust the official emission results for each tested engine at the selected test point by multiplying the measured emissions by the deterioration factor. If the deterioration factor is less than one, use one. Multiplicative deterioration factors must be specified to one more significant figure than the emission standard.

(d) Collect emission data using measurements to one more decimal place than the applicable standard. Apply the deterioration factor to the official emission result, as described in paragraph (c) of this section, then round the adjusted figure to the same number of decimal places as the emission standard. Compare the rounded emission levels to the emission standard for each emission-data engine. In the case of $HC+NO_X$ standards, add the official emission results and apply the deterioration factor to the sum of the pollutants before rounding. However, if your deterioration factors are based on emission measurements that do not cover the vehicle's full useful life, apply the deterioration factor to each pollutant and then add the results before rounding.

(e) Use good engineering judgment to demonstrate compliance with NTE standards throughout the useful life. You may, but are not required to, apply the same deterioration factors used to show compliance with the applicable duty-cycle standards.

[73 FR 59194, Oct. 8, 2008, as amended at 75 FR 23019, Apr. 30, 2010]

§ 1045.245 How do I determine deterioration factors from exhaust durability testing?

This section describes how to determine deterioration factors, either with pre-existing test data or with new emission measurements.

(a) You may ask us to approve deterioration factors for an engine family based on emission measurements from similar engines if you have already given us these data for certifying the other engines in the same or earlier model years. Use good engineering judgment to decide whether the two engines are similar.

(b) If you are unable to determine deterioration factors for an engine family under paragraph (a) of this section, select engines, subsystems, or components for testing. Determine deterioration factors based on service accumulation and related testing. Include consideration of wear and other causes of deterioration expected under typical consumer use, including exposure to saltwater if applicable. Determine deterioration factors as follows:

(1) You must measure emissions from the emission-data engine at a low-hour test point and the end of the useful life. You may also test at evenly spaced intermediate points. Collect emission data using measurements to one more decimal place than the emission standard.

(2) Operate the engine over a representative duty cycle for a period at least as long as the useful life (in hours). You may operate the engine continuously. You may also use an engine installed in a vessel to accumulate service hours instead of running the engine only in the laboratory.

(3) In the case of dual-fuel or flexible-fuel engines, you may accumulate service hours on a single emission-data engine using the type or mixture of fuel expected to have the highest combustion and exhaust temperatures. For dual-fuel engines, you must measure emissions on each fuel type at each test point.

(4) You may perform maintenance on emission-data engines as described in § 1045.125 and 40 CFR part 1065, subpart E.

(5) If you measure emissions at only two points to calculate your deterioration factor, base your calculations on a linear relationship connecting these two data points for each pollutant. If you measure emissions at three or more points, use a linear least-squares fit of your test data for each pollutant to calculate your deterioration factor.

(6) If you test more than one engine to establish deterioration factors, calculate the deterioration factor for each

engine and average the deterioration factors from all the engines before rounding.

(7) Use good engineering judgment for all aspects of the effort to establish deterioration factors under this paragraph (b).

(8) You may use other testing methods to determine deterioration factors, consistent with good engineering judgment, as long as we approve those methods in advance.

(c) Include the following information in your application for certification:

(1) If you determine your deterioration factors based on test data from a different engine family, explain why this is appropriate and include all the emission measurements on which you base the deterioration factor.

(2) If you do testing to determine deterioration factors, describe the form and extent of service accumulation, including the method you use to accumulate hours.

§ 1045.250 What records must I keep and what reports must I send to EPA?

(a) Send the Designated Compliance Officer information related to your U.S.-directed production volumes as described in § 1045.345. In addition, within 45 days after the end of the model year, you must send us a report describing information about engines you produced during the model year as follows:

(1) State the total production volume for each engine family that is not subject to reporting under § 1045.345.

(2) State the total production volume for any engine family for which you produce engines after completing the reports required in § 1045.345.

(3) For production volumes you report under this paragraph (a), identify whether or not the figures include California sales. Include a separate count of production volumes for California sales if those figures are available.

(b) Organize and maintain the following records:

(1) A copy of all applications and any summary information you send us.

(2) Any of the information we specify in § 1045.205 that you were not required to include in your application.

(3) A detailed history of each emission-data engine. For each engine, describe all of the following:

(i) The emission-data engine's construction, including its origin and buildup, steps you took to ensure that it represents production engines, any components you built specially for it, and all the components you include in your application for certification.

(ii) How you accumulated engine operating hours (service accumulation), including the dates and the number of hours accumulated.

(iii) All maintenance, including modifications, parts changes, and other service, and the dates and reasons for the maintenance.

(iv) All your emission tests, including documentation on routine and standard tests, as specified in part 40 CFR part 1065, and the date and purpose of each test.

(v) All tests to diagnose engine or emission control performance, giving the date and time of each and the reasons for the test.

(vi) Any other significant events.

(4) Production figures for each engine family divided by assembly plant.

(5) Keep a list of engine identification numbers for all the engines you produce under each certificate of conformity.

(c) Keep data from routine emission tests (such as test cell temperatures and relative humidity readings) for one year after we issue the associated certificate of conformity. Keep all other information specified in this section for eight years after we issue your certificate.

(d) Store these records in any format and on any media as long as you can promptly send us organized, written records in English if we ask for them. You must keep these records readily available. We may review them at any time.

§ 1045.255 What decisions may EPA make regarding my certificate of conformity?

(a) If we determine your application is complete and shows that the engine family meets all the requirements of this part and the Clean Air Act, we will issue a certificate of conformity for your engine family for that model

year. We may make the approval subject to additional conditions.

(b) We may deny your application for certification if we determine that your engine family fails to comply with emission standards or other requirements of this part or the Clean Air Act. We will base our decision on all available information. If we deny your application, we will explain why in writing.

(c) In addition, we may deny your application or suspend or revoke your certificate if you do any of the following:

(1) Refuse to comply with any testing or reporting requirements.

(2) Submit false or incomplete information (paragraph (e) of this section applies if this is fraudulent).

(3) Render inaccurate any test data.

(4) Deny us from completing authorized activities (see 40 CFR 1068.20). This includes a failure to provide reasonable assistance.

(5) Produce engines for importation into the United States at a location where local law prohibits us from carrying out authorized activities.

(6) Fail to supply requested information or amend your application to include all engines being produced.

(7) Take any action that otherwise circumvents the intent of the Clean Air Act or this part.

(d) We may void your certificate if you do not keep the records we require or do not give us information as required under this part or the Clean Air Act.

(e) We may void your certificate if we find that you intentionally submitted false or incomplete information.

(f) If we deny your application or suspend, revoke, or void your certificate, you may ask for a hearing (see § 1045.820).

Subpart D—Testing Production-line Engines

§ 1045.301 When must I test my production-line engines?

(a) If you produce engines that are subject to the requirements of this part, you must test them as described in this subpart, except as follows:

(1) Small-volume engine manufacturers may omit testing under this subpart.

(2) We may exempt engine families with a projected U.S.-directed production volume below 150 units from routine testing under this subpart. Request this exemption in your application for certification and include your basis for projecting a production volume below 150 units. We will approve your request if we agree that you have made good-faith estimates of your production volumes. Your exemption is approved when we grant your certificate. You must promptly notify us if your actual production exceeds 150 units during the model year. If you exceed the production limit or if there is evidence of a nonconformity, we may require you to test production-line engines under this subpart, or under 40 CFR part 1068, subpart E, even if we have approved an exemption under this paragraph (a)(2).

(3) The requirements of this subpart do not apply to sterndrive/inboard engines.

(b) We may suspend or revoke your certificate of conformity for certain engine families if your production-line engines do not meet the requirements of this part or you do not fulfill your obligations under this subpart (see §§ 1045.325 and 1045.340).

(c) Other regulatory provisions authorize us to suspend, revoke, or void your certificate of conformity, or order recalls for engine families, without regard to whether they have passed these production-line testing requirements. The requirements of this subpart do not affect our ability to do selective enforcement audits, as described in 40 CFR part 1068. Individual engines in families that pass these production-line testing requirements must also conform to all applicable regulations of this part and 40 CFR part 1068.

(d) You may use alternate programs for testing production-line engines in the following circumstances:

(1) You may use analyzers and sampling systems that meet the field-testing requirements of 40 CFR part 1065, subpart J, but not the otherwise applicable requirements in 40 CFR part 1065 for laboratory testing, to demonstrate compliance with duty-cycle emission

standards if you double the minimum sampling rate specified in §1045.310(b). Use measured test results to determine whether engines comply with applicable standards without applying a measurement allowance. This alternate program does not require prior approval but we may disallow use of this option where we determine that use of field-grade equipment would prevent you from being able to demonstrate that your engines are being produced to conform to the specifications in your application for certification.

(2) You may ask to use another alternate program for testing production-line engines. In your request, you must show us that the alternate program gives equal assurance that your products meet the requirements of this part. We may waive some or all of this subpart's requirements if we approve your alternate approach. For example, in certain circumstances you may be able to give us equal assurance that your products meet the requirements of this part by using less rigorous measurement methods if you offset that by increasing the number of test engines.

(e) If you certify an engine family with carryover emission data, as described in §1045.235(d), and these equivalent engine families consistently pass the production-line testing requirements over the preceding two-year period, you may ask for a reduced testing rate for further production-line testing for that family. The minimum testing rate is one engine per engine family. If we reduce your testing rate, we may limit our approval to any number of model years. In determining whether to approve your request, we may consider the number of engines that have failed the emission tests.

(f) We may ask you to make a reasonable number of production-line engines available for a reasonable time so we can test or inspect them for compliance with the requirements of this part.

§1045.305 How must I prepare and test my production-line engines?

This section describes how to prepare and test production-line engines. You must assemble the test engine in a way that represents the assembly procedures for other engines in the engine family. You must ask us to approve any deviations from your normal assembly procedures for other production engines in the engine family.

(a) *Test procedures.* Test your production-line engines using the applicable testing procedures in subpart F of this part to show you meet the duty-cycle emission standards in subpart B of this part. The not-to-exceed standards apply for this testing, but you need not do additional testing to show that production-line engines meet the not-to-exceed standards.

(b) *Modifying a test engine.* Once an engine is selected for testing (see §1045.310), you may adjust, repair, prepare, or modify it or check its emissions only if one of the following is true:

(1) You document the need for doing so in your procedures for assembling and inspecting all your production engines and make the action routine for all the engines in the engine family.

(2) This subpart otherwise specifically allows your action.

(3) We approve your action in advance.

(c) *Engine malfunction.* If an engine malfunction prevents further emission testing, ask us to approve your decision to either repair the engine or delete it from the test sequence.

(d) *Setting adjustable parameters.* Before any test, we may require you to adjust any adjustable parameter to any setting within its physically adjustable range.

(1) We may require you to adjust idle speed outside the physically adjustable range as needed, but only until the engine has stabilized emission levels (see paragraph (e) of this section). We may ask you for information needed to establish an alternate minimum idle speed.

(2) We may specify adjustments within the physically adjustable range by considering their effect on emission levels. We may also consider how likely it is that someone will make such an adjustment with in-use engines.

(e) *Stabilizing emission levels.* You may operate the engine to stabilize the emission levels before you test production-line engines. Using good engineering judgment, operate your engines in

a way that represents the way production engines will be used. You may operate each engine for no more than the greater of two periods:

(1) 12 hours.

(2) The number of hours you operated your emission-data engine for certifying the engine family (see 40 CFR part 1065, subpart E, or the applicable regulations governing how you should prepare your test engine).

(f) *Damage during shipment.* If shipping an engine to a remote facility for production-line testing makes necessary an adjustment or repair, you must wait until after the initial emission test to do this work. We may waive this requirement if the test would be impossible or unsafe or if it would permanently damage the engine. Report to us in your written report under § 1045.345 all adjustments or repairs you make on test engines before each test.

(g) *Retesting after invalid tests.* You may retest an engine if you determine an emission test is invalid under subpart F of this part. Explain in your written report reasons for invalidating any test and the emission results from all tests. If we determine that you improperly invalidated a test, we may require you to ask for our approval for future testing before substituting results of the new tests for invalid ones.

§ 1045.310 How must I select engines for production-line testing?

(a) Test engines from each engine family as described in this section based on test periods, as follows:

(1) For engine families with projected U.S.-directed production volume of at least 1,600, the test periods are consecutive quarters (3 months). However, if your annual production period is less than 12 months long, you may take the following alternative approach to define quarterly test periods:

(i) If your annual production period is 120 days or less, the whole model year constitutes a single test period.

(ii) If your annual production period is 121 to 210 days, divide the annual production period evenly into two test periods.

(iii) If your annual production period is 211 to 300 days, divide the annual production period evenly into three test periods.

(iv) If your annual production period is 301 days or longer, divide the annual production period evenly into four test periods.

(2) For engine families with projected U.S.-directed production volume below 1,600, the whole model year constitutes a single test period.

(b) Early in each test period, randomly select and test an engine from the end of the assembly line for each engine family.

(1) In the first test period for newly certified engines, randomly select and test one more engine. Then, calculate the required sample size for the model year as described in paragraph (c) of this section.

(2) In later test periods of the same model year, combine the new test result with all previous testing in the model year. Then, calculate the required sample size for the model year as described in paragraph (c) of this section.

(3) In the first test period for engine families relying on previously submitted test data, combine the new test result with the last test result from the previous model year. Then, calculate the required sample size for the model year as described in paragraph (c) of this section. Use the last test result from the previous model year only for this first calculation. For all subsequent calculations, use only results from the current model year.

(c) Calculate the required sample size for each engine family. Separately calculate this figure for $HC+NO_X$ and CO. The required sample size is the greater of these calculated values. Use the following equation:

$$N = \left[\frac{(t_{95} \cdot \sigma)}{(x - STD)} \right]^2 + 1$$

Where:

N = Required sample size for the model year.

t_{95} = 95% confidence coefficient, which depends on the number of tests completed, n, as specified in the table in paragraph (c)(1) of this section. It defines 95% confidence intervals for a one-tail distribution.

σ = Test sample standard deviation (see paragraph (c)(2) of this section).

x = Mean of emission test results of the sample.

STD = Emission standard (or family emission limit, if applicable).

(1) Determine the 95% confidence coefficient, t_{95}, from the following table:

n	t_{95}	n	t_{95}	n	t_{95}
2	6.31	12	1.80	22	1.72
3	2.92	13	1.78	23	1.72
4	2.35	14	1.77	24	1.71
5	2.13	15	1.76	25	1.71
6	2.02	16	1.75	26	1.71
7	1.94	17	1.75	27	1.71
8	1.90	18	1.74	28	1.70
9	1.86	19	1.73	29	1.70
10	1.83	20	1.73	30+	1.70
11	1.81	21	1.72		

(2) Calculate the standard deviation, σ, for the test sample using the following formula:

$$\sigma = \left[\sum \frac{(X_i - x)^2}{(n-1)} \right]^{\frac{1}{2}}$$

Where:

X_i = Emission test result for an individual engine.

n = The number of tests completed in an engine family.

(d) Use final deteriorated test results to calculate the variables in the equations in paragraph (c) of this section (see §1045.315(a)(2)).

(e) After each new test, recalculate the required sample size using the updated mean values, standard deviations, and the appropriate 95-percent confidence coefficient.

(f) Distribute the remaining engine tests evenly throughout the rest of the year. You may need to adjust your schedule for selecting engines if the required sample size changes. If your scheduled quarterly testing for the remainder of the model year is sufficient to meet the calculated sample size, you may wait until the next quarter to do additional testing. Continue to randomly select engines from each engine family.

(g) Continue testing until one of the following things happens:

(1) After completing the minimum number of tests required in paragraph (b) of this section, the number of tests completed in an engine family, n, is greater than the required sample size, N, and the sample mean, x, is less than or equal to the emission standard. For example, if N = 5.1 after the fifth test, the sample-size calculation does not allow you to stop testing.

(2) The engine family does not comply according to §1045.315.

(3) You test 30 engines from the engine family.

(4) You test one percent of your projected annual U.S.-directed production volume for the engine family, rounded to the nearest whole number. Do not count an engine under this paragraph (g)(4) if it fails to meet an applicable emission standard.

(5) You choose to declare that the engine family does not comply with the requirements of this subpart.

(h) If the sample-size calculation allows you to stop testing for one pollutant but not another, you must continue measuring emission levels of all pollutants for any additional tests required under this section. However, you need not continue making the calculations specified in this subpart for the pollutant for which testing is not required. This paragraph (h) does not affect the number of tests required under this section, the required calculations in §1045.315, or the remedial steps required under §1045.320.

(i) You may elect to test more randomly chosen engines than we require under this section. Include these engines in the sample-size calculations.

§ 1045.315 How do I know when my engine family fails the production-line testing requirements?

This section describes the pass-fail criteria for the production-line testing requirements. We apply these criteria on an engine-family basis. See § 1045.320 for the requirements that apply to individual engines that fail a production-line test.

(a) Calculate your test results as follows:

(1) *Initial and final test results.* Calculate and round the test results for each engine. If you do several tests on an engine, calculate the initial results for each test, then add all the test results together and divide by the number of tests. Round this final calculated value for the final test results on that engine.

(2) *Final deteriorated test results.* Apply the deterioration factor for the engine family to the final test results (see § 1045.240(c)).

(3) *Round deteriorated test results.* Round the results to the number of decimal places in the emission standard expressed to one more decimal place.

(b) Construct the following CumSum Equation for each engine family for $HC+NO_X$ and CO emissions:

$$C_i = \text{Max}\ [0 \text{ or } C_{i-1} + X_i - (STD + 0.25 \times \sigma)]$$

Where:

C_i = The current CumSum statistic.

C_{i-1} = The previous CumSum statistic. For the first test, the CumSum statistic is 0 (i.e., $C_1 = 0$).

X_i = The current emission test result for an individual engine.

STD = Emission standard (or family emission limit, if applicable).

(c) Use final deteriorated test results to calculate the variables in the equation in paragraph (b) of this section (see § 1045.315(a)).

(d) After each new test, recalculate the CumSum statistic.

(e) If you test more than the required number of engines, include the results from these additional tests in the CumSum Equation.

(f) After each test, compare the current CumSum statistic, Ci, to the recalculated Action Limit, H, defined as $H = 5.0 \times \sigma$.

(g) If the CumSum statistic exceeds the Action Limit in two consecutive tests, the engine family fails the production-line testing requirements of this subpart. Tell us within ten working days if this happens. You may request to amend the application for certification to raise the FEL of the entire engine family as described in § 1045.225(f).

(h) If you amend the application for certification for an engine family under § 1045.225, do not change any previous calculations of sample size or CumSum statistics for the model year.

§ 1045.320 What happens if one of my production-line engines fails to meet emission standards?

(a) If you have a production-line engine with final deteriorated test results exceeding one or more emission standards (see § 1045.315(a)), the certificate of conformity is automatically suspended for that failing engine. You must take the following actions before your certificate of conformity can cover that engine:

(1) Correct the problem and retest the engine to show it complies with all emission standards.

(2) Include the test results and describe the remedy for each engine in the written report required under § 1045.345.

(b) You may request to amend the application for certification to raise the FEL of the entire engine family at this point (see § 1045.225).

[73 FR 59194, Oct.8, 2008, as amended at 73 FR 73789, Dec. 4, 2008]

§ 1045.325 What happens if an engine family fails the production-line testing requirements?

(a) We may suspend your certificate of conformity for an engine family if it fails under § 1045.315. The suspension may apply to all facilities producing engines from an engine family even if you find noncompliant engines only at one facility.

(b) We will tell you in writing if we suspend your certificate in whole or in part. We will not suspend a certificate until at least 15 days after the engine family fails. The suspension is effective when you receive our notice.

(c) Up to 15 days after we suspend the certificate for an engine family, you may ask for a hearing (see § 1045.820). If we agree before a hearing occurs that we used erroneous information in deciding to suspend the certificate, we will reinstate the certificate.

(d) Section 1045.335 specifies steps you must take to remedy the cause of the engine family's production-line failure. All the engines you have produced since the end of the last test period are presumed noncompliant and should be addressed in your proposed remedy. We may require you to apply the remedy to engines produced earlier if we determine that the cause of the failure is likely to have affected the earlier engines.

(e) You may request to amend the application for certification to raise the FEL of the engine family before or after we suspend your certificate as described in § 1045.225(f). We will approve your request if the failure is not caused by a defect and it is clear that you used good engineering judgment in establishing the original FEL.

§ 1045.330 May I sell engines from an engine family with a suspended certificate of conformity?

You may sell engines that you produce after we suspend the engine family's certificate of conformity under § 1045.315 only if one of the following occurs:

(a) You test each engine you produce and show it complies with emission standards that apply.

(b) We conditionally reinstate the certificate for the engine family. We may do so if you agree to recall all the affected engines and remedy any noncompliance at no expense to the owner if later testing shows that the engine family still does not comply.

§ 1045.335 How do I ask EPA to reinstate my suspended certificate?

(a) Send us a written report asking us to reinstate your suspended certificate. In your report, identify the reason for noncompliance, propose a remedy for the engine family, and commit to a date for carrying it out. In your proposed remedy include any quality control measures you propose to keep the problem from happening again.

(b) Give us data from production-line testing that shows the remedied engine family complies with all the emission standards that apply.

§ 1045.340 When may EPA revoke my certificate under this subpart and how may I sell these engines again?

(a) We may revoke your certificate for an engine family in the following cases:

(1) You do not meet the reporting requirements.

(2) Your engine family fails to comply with the requirements of this subpart and your proposed remedy to address a suspended certificate under § 1045.335 is inadequate to solve the problem or requires you to change the engine's design or emission control system.

(b) To sell engines from an engine family with a revoked certificate of conformity, you must modify the engine family and then show it complies with the requirements of this part.

(1) If we determine your proposed design change may not control emissions for the engine's full useful life, we will tell you within five working days after receiving your report. In this case we will decide whether production-line testing will be enough for us to evaluate the change or whether you need to do more testing.

(2) Unless we require more testing, you may show compliance by testing production-line engines as described in this subpart.

(3) We will issue a new or updated certificate of conformity when you have met these requirements.

§ 1045.345 What production-line testing records must I send to EPA?

(a) Within 45 days of the end of each test period, send us a report with the following information:

(1) Describe any facility used to test production-line engines and state its location.

(2) State the total U.S.-directed production volume and number of tests for each engine family.

(3) Describe how you randomly selected engines.

(4) Describe each test engine, including the engine family's identification and the engine's model year, build

date, model number, identification number, and number of hours of operation before testing.

(5) Identify how you accumulated hours of operation on the engines and describe the procedure and schedule you used.

(6) Provide the test number; the date, time and duration of testing; test procedure; all initial test results; final test results; and final deteriorated test results for all tests. Provide the emission results for all measured pollutants. Include information for both valid and invalid tests and the reason for any invalidation.

(7) Describe completely and justify any nonroutine adjustment, modification, repair, preparation, maintenance, or test for the test engine if you did not report it separately under this subpart. Include the results of any emission measurements, regardless of the procedure or type of engine.

(8) Provide the CumSum analysis required in §1045.315 and the sample-size calculation required in §1045.310 for each engine family.

(9) Report on each failed engine as described in §1045.320.

(10) State the date the test period ended for each engine family.

(b) We may ask you to add information to your written report so we can determine whether your new engines conform with the requirements of this subpart. We may also ask you to send less information.

(c) An authorized representative of your company must sign the following statement:

We submit this report under sections 208 and 213 of the Clean Air Act. Our production-line testing conformed completely with the requirements of 40 CFR part 1045. We have not changed production processes or quality-control procedures for test engines in a way that might affect emission controls. All the information in this report is true and accurate to the best of my knowledge. I know of the penalties for violating the Clean Air Act and the regulations. (Authorized Company Representative).

(d) Send electronic reports of production-line testing to the Designated Compliance Officer using an approved information format. If you want to use a different format, send us a written request with justification for a waiver.

(e) We will send copies of your reports to anyone from the public who asks for them. Section 1045.815 describes how we treat information you consider confidential.

§1045.350 What records must I keep?

(a) Organize and maintain your records as described in this section. We may review your records at any time.

(b) Keep paper or electronic records of your production-line testing for eight years after you complete all the testing required for an engine family in a model year.

(c) Keep a copy of the written reports described in §1045.345.

(d) Keep the following additional records:

(1) A description of all test equipment for each test cell that you can use to test production-line engines.

(2) The names of supervisors involved in each test.

(3) The name of anyone who authorizes adjusting, repairing, preparing, or modifying a test engine and the names of all supervisors who oversee this work.

(4) If you shipped the engine for testing, the date you shipped it, the associated storage or port facility, and the date the engine arrived at the testing facility.

(5) Any records related to your production-line tests that are not in the written report.

(6) A brief description of any significant events during testing not otherwise described in the written report or in this section.

(7) Any information specified in §1045.345 that you do not include in your written reports.

(e) If we ask, you must give us a more detailed description of projected or actual production figures for an engine family. We may ask you to divide your production figures by maximum engine power, displacement, fuel type, or assembly plant (if you produce engines at more than one plant).

(f) Keep records of the engine identification number for each engine you produce under each certificate of conformity. You may identify these numbers as a range. Give us these records within 30 days if we ask for them.

(g) We may ask you to keep or send other information necessary to implement this subpart.

Subpart E—In-Use Testing

§ 1045.401 What testing requirements apply to my engines that have gone into service?

(a) We may perform in-use testing of any engines subject to the standards of this part. If you produce outboard or personal watercraft engines that are subject to the requirements of this part, you must test them as described in this subpart. The testing requirements described in this subpart do not apply to sterndrive/inboard engines. This generally involves testing engines in the field or removing them for measurement in a laboratory.

(b) We may approve an alternate plan for showing that in-use engines comply with the requirements of this part if one of the following is true:

(1) You produce 200 or fewer engines per year in the selected engine family.

(2) You identify a unique aspect of your engine applications that keeps you from doing the required in-use testing.

(c) We may void your certificate of conformity for an engine family if you do not meet your obligations under this part.

(d) Independent of your responsibility to test in-use engines, we may choose at any time to do our own testing of your in-use engines.

(e) If in-use testing shows that engines fail to meet emission standards or other requirements of this part, we may pursue a recall or other remedy as allowed by the Clean Air Act (see § 1045.415).

§ 1045.405 How does this program work?

(a) You must test in-use engines for exhaust emissions from the families we select. We may select up to 25 percent of your engine families in any model year—or one engine family if you have three or fewer families. When we select an engine family for testing, we may specify that you preferentially test engines based on the type of vessel. In addition, we may identify specific modes of operation or sampling times. You may choose to test additional engine families that we do not select.

(b) The provisions of this paragraph (b) describe how test families are selected, depending on when we receive the application for certification.

(1) If we receive the application by December 31 of a given calendar year for the following model year (for example, by December 31, 2009 for model year 2010), we would expect to select engine families for testing by February 28 of the model year. If we have not completed the selection of engine families by February 28, you may select your own engine families for in-use testing. In this case, you must make your selections and notify us which engine families you have selected by March 31. You should consider the following factors in selecting engine families, in priority order:

(i) Select an engine family that has not recently been tested in an in-use testing regimen (and passed) under the provisions of this subpart. This should generally involve engine families that have not been selected in the previous two model years. If design changes have required new testing for certification, we would consider that this engine family has not been selected for in-use testing.

(ii) Select an engine family if we have approved an alternative approach to establishing a deterioration factor under § 1045.245(b)(8).

(iii) Select the engine family with the highest projected U.S.-directed production volume.

(2) If we receive an application for a given model year after December 31 of the previous calendar year, you must conduct in-use testing with that engine family without regard to the limitations specified in paragraph (a) of this section, unless we waive this requirement. We will generally waive testing under this paragraph (b)(2) only for small-volume engine manufacturers or in the case where similar testing was recently completed for a related engine family.

(c) Send us an in-use testing plan for engine families selected for testing as described in this paragraph (c). Complete the testing within 36 months after we direct you to test a particular engine family. Send us a complete in-

use testing plan according to the following deadlines:

(1) Within six months after we direct you to test a particular engine family.

(2) By February 28 of the following year if you select engine families for testing under paragraph (b)(1) of this section.

(3) Within six months after we approve certification for engine families subject to the requirements of paragraph (b)(2) of this section.

(4) If we request additional information or require you to modify your plan to meet the requirements of this subpart, you must provide the information or the modified plan within 30 days of our request.

(d) You may need to test engines from more than one model year at a given time.

(e) In appropriate extreme and unusual circumstances that are clearly outside your control and could not have been avoided by the exercise of prudence, diligence, and due care, we may allow more time to complete testing or we may waive the in-use testing requirement for an engine family. For example, if your test fleet is destroyed by severe weather during service accumulation and we agree that completion of testing is not possible, we would generally waive testing requirements for that engine family.

[73 FR 59194, Oct. 8, 2008, as amended at 75 FR 23020, Apr. 30, 2010]

§ 1045.410 How must I select, prepare, and test my in-use engines?

(a) You may make arrangements to select representative test engines from your own fleet or from other independent sources.

(b) For the selected engine families, select engines that you or your customers have—

(1) Operated for at least 50 percent of the engine family's useful life (see § 1045.103(e));

(2) Not maintained or used in an abnormal way; and

(3) Documented in terms of total hours of operation, maintenance, operating conditions, and storage.

(c) Use the following methods to determine the number of engines you must test in each engine family:

(1) Test at least two engines if you produce 2,000 or fewer engines in the model year from all engine families, or if you produce 500 or fewer engines from the selected engine family. Otherwise, test at least four engines.

(2) If you successfully complete an in-use test program on an engine family and later certify an equivalent engine family with carryover emission data, as described in § 1045.235(d)(1), then test at least one engine instead of the testing rates in paragraph (c)(1) of this section.

(3) If you test the minimum required number of engines and all comply fully with emission standards, you may stop testing.

(4) For each engine that fails any applicable emission standard, test two more. Regardless of measured emission levels, you do not have to test more than ten engines in an engine family. You may do more tests than we require.

(5) You may concede that the engine family does not comply before testing a total of ten engines.

(6) In appropriate extreme and unusual circumstances that could not have been avoided by the exercise of prudence, diligence, and due care, we may waive the in-use testing requirement for an engine family.

(d) You may do minimal maintenance to set components of a test engine to specifications for anything we do not consider an adjustable parameter (see § 1045.205(r)). Limit maintenance to what is in the owner's instructions for engines with that amount of service and age. Document all maintenance and adjustments.

(e) You may do repeat measurements with a test engine; however, you must conduct the same number of tests on each engine.

(f) For a test program on an engine family, choose one of the following methods to test your engines:

(1) Remove the selected engines for testing in a laboratory. Use the applicable procedures in subpart F of this part to show compliance with the duty-cycle standards in § 1045.103(a) or § 1045.105(a). We may direct you to measure emissions on the dynamometer using the test procedures in

§ 1045.515 to show compliance with the not-to-exceed standards in § 1045.107.

(2) Test the selected engines while they remain installed in the vessel. Use the procedures in § 1045.515. Measure emissions during normal operation of the vessel to show compliance with the not-to-exceed standards in § 1045.107. We may direct you to include specific areas of normal operation.

(g) You may ask us to waive parts of the prescribed test procedures if they are not necessary to determine in-use compliance.

(h) Calculate the average emission levels for an engine family from the results for the set of tested engines. Round them to the number of decimal places in the emission standards expressed to one more decimal place.

§ 1045.415 What happens if in-use engines do not meet requirements?

(a) Determine the reason each in-use engine exceeds the emission standards.

(b) If the average emission levels calculated in § 1045.410(h) exceed any of the emission standards that apply, notify us within fifteen days of completing testing on this family. Otherwise follow the reporting instructions in § 1045.420.

(c) We will consider failure rates, average emission levels, and any defects—among other things—to decide on taking remedial action under this subpart (see 40 CFR 1068.505). We may consider the results from any voluntary additional testing you perform. We may also consider information related to testing from other engine families showing that you designed them to exceed the minimum requirements for controlling emissions. We may order a recall before or after you complete testing of an engine family if we determine a substantial number of engines do not conform to section 213 of the Clean Air Act or to this part. The scope of the recall may include other engine families in the same or different model years if the cause of the problem identified in paragraph (a) of this section applies more broadly than the tested engine family, as allowed by the Clean Air Act.

(d) If in-use testing reveals a design or manufacturing defect that prevents engines from meeting the requirements of this part, you must correct the defect as soon as possible for any future production for engines in every family affected by the defect. See 40 CFR 1068.501 for additional requirements related to defect reporting.

(e) You may voluntarily recall an engine family for emission failures, as described in 40 CFR 1068.535, unless we have ordered a recall for that family under 40 CFR 1068.505.

(f) You have the right to a hearing before we order you to recall your engines or implement an alternative remedy (see § 1045.820).

§ 1045.420 What in-use testing information must I report to EPA?

(a) In a report to us within three months after you finish testing an engine family, do all the following:

(1) Identify the engine family, model, serial number, and date of manufacture.

(2) [Reserved]

(3) Describe the specific reasons for disqualifying any engines for not being properly maintained or used.

(4) For each engine selected for testing, include the following information:

(i) Estimate the hours each engine was used before testing.

(ii) Describe all maintenance, adjustments, modifications, and repairs to each test engine.

(5) State the date and time of each test attempt.

(6) Include the results of all emission testing, including incomplete or invalidated tests, if any.

(b) Send electronic reports of in-use testing to the Designated Compliance Officer using an approved information format. If you want to use a different format, send us a written request with justification for a waiver.

(c) We will send copies of your reports to anyone from the public who asks for them. See § 1045.815 for information on how we treat information you consider confidential.

(d) We may ask for more information.

§ 1045.425 What records must I keep?

(a) Organize and maintain your records as described in this section. We may review your records at any time, so it is important to keep required information readily available.

(b) Keep paper records of your in-use testing for one full year after you complete all the testing required for an engine family in a model year. You may use any additional storage formats or media if you like.

(c) Keep a copy of the written reports described in § 1045.420.

(d) Keep any additional records related to the procurement process.

Subpart F—Test Procedures

§ 1045.501 How do I run a valid emission test?

(a) *Applicability*. This subpart is addressed to you as a manufacturer but it applies equally to anyone who does testing for you, and to us when we perform testing to determine if your engines meet emission standards.

(b) *General requirements*. Use the equipment and procedures for spark-ignition engines in 40 CFR part 1065 to determine whether engines meet the duty-cycle emission standards in §§ 1045.103 and 1045.105. Measure the emissions of all exhaust constituents subject to emissions standards as specified in 40 CFR part 1065. Measure CO_2, N_2O, and CH_4 as described in § 1045.235. Use the applicable duty cycles specified in § 1045.505. Section 1045.515 describes the supplemental procedures for evaluating whether engines meet the not-to-exceed emission standards in § 1045.107.

(c) *Fuels*. Use the fuels and lubricants specified in 40 CFR part 1065, subpart H, for all the testing we require in this part, except as specified in § 1045.515. Use gasoline meeting the specifications described in 40 CFR 1065.710 for general testing. For service accumulation, use the test fuel or any commercially available fuel that is representative of the fuel that in-use engines will use. You may alternatively use gasoline blended with ethanol as follows:

(1) You may use the ethanol-blended fuel for certifying engines under this part without our advance approval. If you use the blended fuel for certifying a given engine family, you may also use it for production-line testing or any other testing you perform for that engine family under this part. If you use the blended fuel for certifying a given engine family, we may use the blended fuel or the specified gasoline test fuel with that engine family.

(2) The blended fuel must consist of a mix of gasoline meeting the specifications described in 40 CFR 1065.710 for general testing and fuel-grade ethanol meeting the specifications described in 40 CFR 1060.501(c) such that the blended fuel has 10.0+1.0 percent ethanol by volume. You may also use ethanol with a higher or lower purity if you show us that it will not affect your ability to demonstrate compliance with the applicable emission standards. You do not need to measure the ethanol concentration of such blended fuels and may instead calculate the blended composition by assuming that the ethanol is pure and mixes perfectly with the base fuel.

(d) *Laboratory conditions*. Ambient conditions for duty-cycle testing must be within ranges specified in 40 CFR 1065.520, subject to the provisions of § 1045.115(d). Emissions may not be corrected for the effects of test temperature or pressure. Humidity levels must represent actual in-use humidity levels; however, you may correct emissions for humidity as specified in 40 CFR 1065.670.

(e) *Engine stabilization*. Instead of the provisions of 40 CFR 1065.405, you may consider emission levels stable without measurement after 12 hours of engine operation.

(f) *Maximum test speed*. Instead of the provisions of 40 CFR 1065.510(f), you may declare a value of maximum test speed for laboratory testing that is within 500 rpm of the corresponding measured value for maximum test speed.

(g) *Special and alternate procedures*. If you are unable to run the duty cycle specified in this part for your engine (such as with constant-speed engines), use an alternate test cycle that will result in a cycle-weighted emission measurement equivalent to the expected average in-use emissions. This cycle must be approved under 40 CFR 1065.10. You may use other special or alternate procedures to the extent we allow them under 40 CFR 1065.10.

(h) *Laboratory testing with portable analyzers*. You may use field-grade equipment for any laboratory testing with high-performance engines, as

specified in 40 CFR 1065.901(b), without requesting approval.

[73 FR 59194, Oct. 8, 2008, as amended at 74 FR 56510, Oct. 30, 2009]

§ 1045.505 How do I test engines using discrete-mode or ramped-modal duty cycles?

(a) This section describes how to test engines under steady-state conditions. We allow you to perform tests with either discrete-mode or ramped-modal sampling. You must use the modal testing method for certification and all other testing you perform for an engine family. If we test your engines to confirm that they meet emission standards, we will use the modal testing method you select for your own testing. If you submit certification test data collected with both discrete-mode and ramped-modal testing (either in your original application or in an amendment to your application), either method may be used for subsequent testing. We may also perform other testing as allowed by the Clean Air Act. Conduct duty-cycle testing as follows:

(1) For discrete-mode testing, sample emissions separately for each mode, then calculate an average emission level for the whole cycle using the weighting factors specified for each mode. In each mode, operate the engine for at least 5 minutes, then sample emissions for at least 1 minute. Calculate cycle statistics and compare with the established criteria as specified in 40 CFR 1065.514 to confirm that the test is valid.

(2) For ramped-modal testing, start sampling at the beginning of the first mode and continue sampling until the end of the last mode. Calculate emissions and cycle statistics the same as for transient testing as specified in 40 CFR part 1065.

(b) Measure emissions by testing the engine on a dynamometer to determine whether it meets the emission standards in §§ 1045.103(a) and 1045.105(a). Use the 5-mode duty cycle or the corresponding ramped-modal cycle described in Appendix I of this part.

(c) During idle mode, operate the engine at its warm idle speed as described in 40 CFR 1065.510; this may involve a nonzero torque setting if that represents in-use operation.

(d) For full-load operating modes, operate the engine at wide-open throttle.

(e) See 40 CFR part 1065 for detailed specifications of tolerances and calculations.

§ 1045.515 What are the test procedures related to not-to-exceed standards?

(a) This section describes the procedures to determine whether your engines meet the not-to-exceed emission standards in § 1045.107. These procedures may include any normal engine operation and ambient conditions that the engines may experience in use. Paragraphs (b) and (c) of this section define the limits of what we will consider normal engine operation and ambient conditions. Use the test procedures we specify in § 1045.501, except for the provisions we specify in this section. Measure emissions with one of the following procedures:

(1) Remove the selected engines for testing in a laboratory. You may use an engine dynamometer to simulate normal operation, as described in this section.

(2) Test the selected engines while they remain installed on a vessel. In 40 CFR part 1065, subpart J, we describe the equipment and sampling methods for testing engines in the field. Use fuel meeting the specifications of 40 CFR part 1065, subpart H, or a fuel typical of what you would expect the engine to use in service.

(b) Engine testing may occur under a range of ambient conditions as follows:

(1) Engine testing may occur under the following ranges of ambient conditions without correcting measured emission levels:

(i) Barometric pressure must be between 94.0 and 103.325 kPa.

(ii) Ambient air temperature must be between 13 and 35 °C.

(iii) Ambient water temperature must be between 5 and 27 °C.

(iv) Any ambient humidity level.

(2) Engine testing may occur outside the conditions described in paragraph (b)(1) of this section, as long as measured values are corrected to be equivalent to the nearest end of the specified range using good engineering practice.

(c) An engine's emissions may not exceed the NTE standards in § 1045.107 under the following ranges of engine operation:

(1) The sampling period may not begin until the engine has reached stable operating temperatures. For example, this would exclude engine operation after starting until the thermostat starts modulating coolant temperature. The sampling period may also not include engine starting. For testing under paragraphs (c)(4) and (6) of this section, the NTE standards apply for any continuous sampling period of at least 30 seconds.

(2) Engine operation during the emission sampling period may include any nominally steady-state combination of speeds and loads within the applicable zone defined by segments on an engine's power vs. speed map specified in paragraphs (c)(3) through (6) of this section, except as follows:

(i) You may request that we specify a narrower zone, as long as the modified zone includes all points where your engines are expected to normally operate in use, but not including any points at which engine speed is below 40 percent of maximum test speed or engine load is below 25.3 percent of maximum torque at maximum test speed. However, we may perform valid tests at any speeds and loads within the zones specified in paragraphs (c)(3) through (6) of this section that we observe with in-use engines. The engine must comply with emission standards at all such speeds and loads unless we determine that one of following criteria are true:

(A) Such speeds and loads occur very infrequently. This determination may consider whether the operation would be expected to result in damage to the engine or vessel or be inherently unsafe.

(B) Such speeds and loads result from the engine being installed in a manner that is not consistent with your emission-related installation instructions.

(ii) You must notify us if you design your engines for normal in-use operation outside the specified zone. If we learn that normal in-use operation for your engines includes other speeds and loads, we may specify a broader zone, as long as the modified zone is limited to normal in-use operation for speeds greater than 40 percent of maximum test speed and loads greater than 25.3 percent of maximum torque at maximum test speed.

(3) The NTE zone for testing engines under this section is defined by the following segments on an engine's torque vs. speed map, as illustrated in Figures 1 through 3 of this section:

(i) Speed at or above 40 percent of maximum test speed.

(ii) Speeds and torques below the line defined by the following equation:

$$\text{Normalized torque} = 1.5 \times \text{normalized speed} - 0.16$$

(iii) Speeds and torques at or below the engine's mapped torque values.

(iv) Speeds at or below 100 percent of maximum test speed, except as specified in paragraph (c)(5) of this section.

(v) Speeds and torques above the line defined by the following equation:

$$\text{Normalized torque} = (\text{normalized speed})^{1.5} - 0.08$$

(vi) Torques at or above 25.3 percent of maximum torque at maximum test speed, except as specified in paragraph (c)(5) of this section.

(4) For engines equipped with a catalyst, the NTE zone described in paragraph (c)(3) of this section is divided into the following subzones for determining the applicable NTE standards, as illustrated in Figure 1 of this section:

(i) Subzone 1 includes all operation in the NTE zone characterized by speeds and torques above the line represented by the following equation:

$$(\text{percent torque}) = 1.2 - 0.5 \times (\text{percent speed})$$

(ii) Subzone 2 includes all operation in the NTE zone not included in Subzone 1.

Figure 1 of §1045.515 –
NTE Zone and Subzones for Catalyst-Equipped Engines

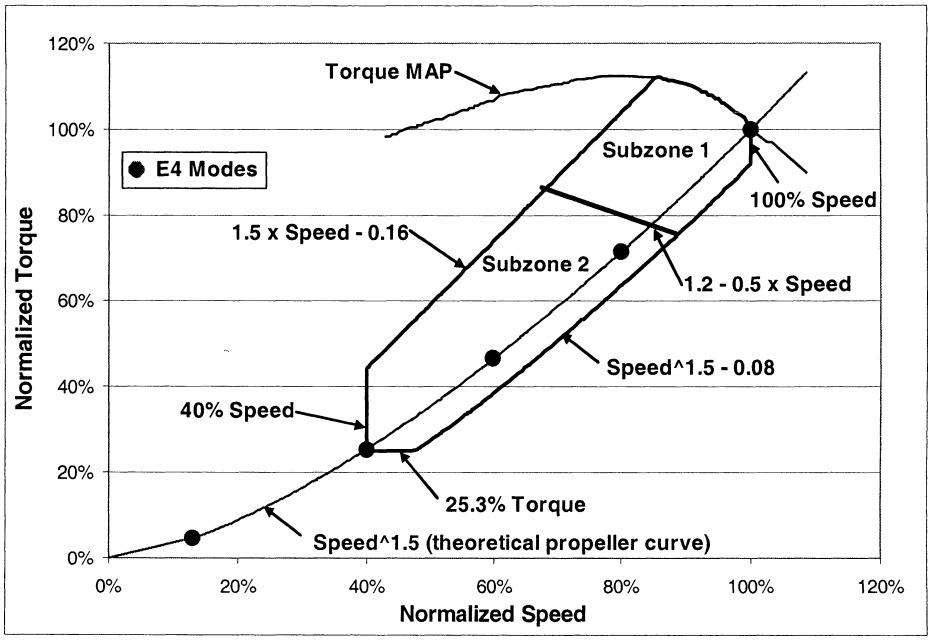

(5) For two-stroke engines not equipped with a catalyst, the NTE zone described in paragraph (c)(3) of this section is divided into subzones for testing to determine compliance with the applicable NTE standards. Measure emissions to get an NTE result by collecting emissions at five points as described in this paragraph (c)(5). Calculate a weighted test result for these emission measurements using the weighting factors from Appendix II of this part for the corresponding modal result (similar to discrete-mode testing for certification). Test engines over the following modes corresponding to the certification duty cycle:

(i) Mode 1: Operate the engine at wide open throttle. For laboratory testing, this may involve any torque value between the boundaries specified in paragraph (c)(3) of this section.

(ii) Mode 2: Operate the engine at a nominal speed that is 80 percent of maximum test speed at any torque value between the boundaries specified in paragraph (c)(3) of this section.

(iii) Mode 3: Operate the engine at a nominal speed that is 60 percent of maximum test speed at any torque value between the boundaries specified in paragraph (c)(3) of this section.

(iv) Mode 4: Operate the engine at a nominal speed that is 40 percent of maximum test speed at any torque value between the boundaries specified in paragraphs (c)(3)(ii) and (v) of this section.

(v) Mode 5: Operate the engine at idle.

Figure 2 of §1045.515 --
NTE Zone and Subzones for Two-stroke Engines Without Catalysts

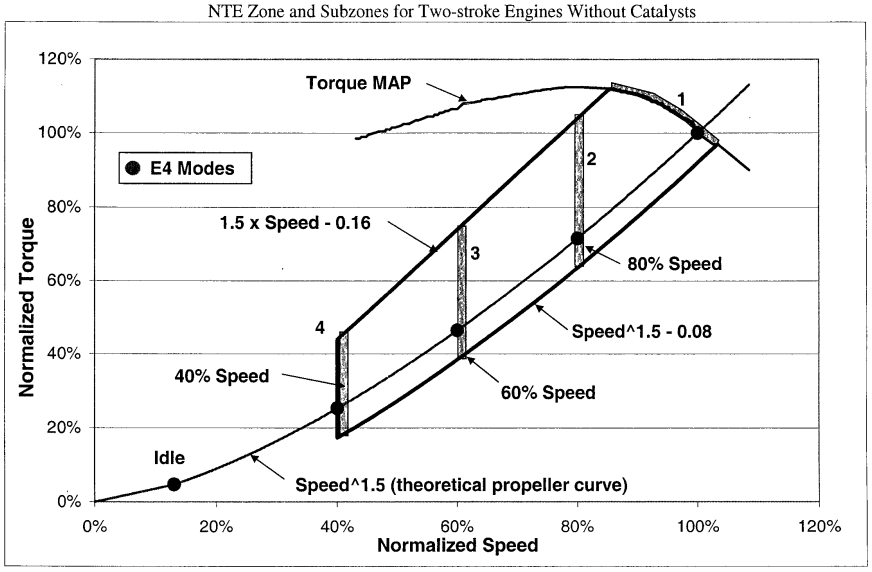

(6) For any engines not covered by paragraphs (c)(4) and (5) of this section, the NTE zone described in paragraph (c)(3) of this section is divided into the following subzones for determining the applicable NTE standards, as illustrated in Figure 2 of this section:

(i) Subzone 1 includes all operation in the NTE zone at speeds above 50 percent of maximum test speed.

(ii) Subzone 2 includes all operation in the NTE zone not included in Subzone 1.

Figure 3 of §1045.515 –
NTE Zone and Subzones for Four-Stroke Engines Without Catalysts

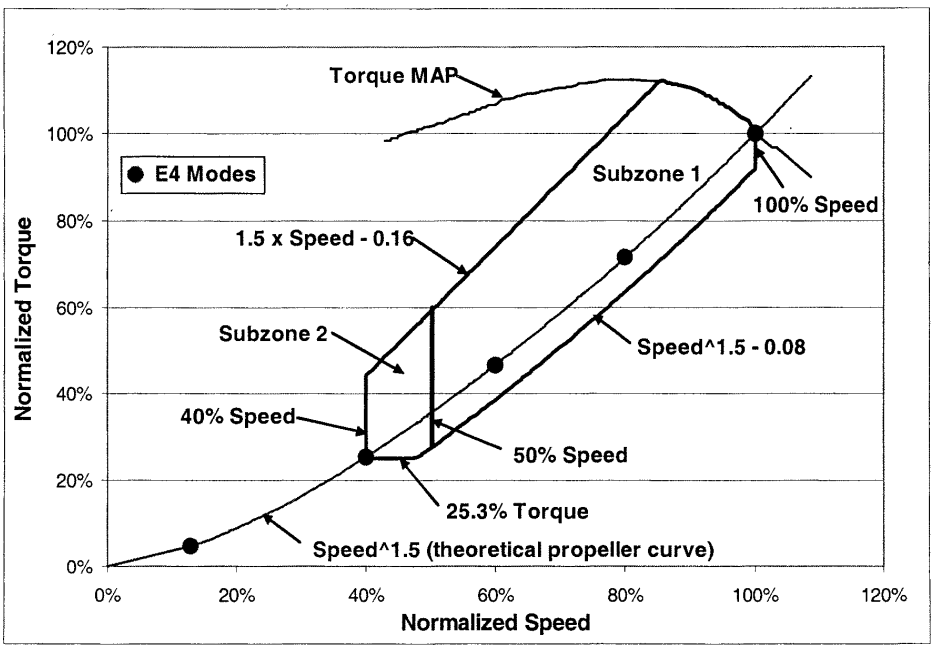

[73 FR 59194, Oct. 8, 2008, as amended at 75 FR 23020, Apr. 30, 2010]

§ 1045.520 What testing must I perform to establish deterioration factors?

Sections 1045.240 and 1045.245 describe the required methods for testing to establish deterioration factors for an engine family.

Subpart G—Special Compliance Provisions

§ 1045.601 What compliance provisions apply to these engines?

Engine and vessel manufacturers, as well as owners, operators, and rebuilders of engines subject to the requirements of this part, and all other persons, must observe the provisions of this part, the requirements and prohibitions in 40 CFR part 1068, and the provisions of the Clean Air Act.

§ 1045.605 What provisions apply to engines already certified under the motor vehicle or Large SI programs?

(a) *General provisions.* If you are an engine manufacturer, this section allows you to introduce new propulsion marine engines into U.S. commerce if they are already certified to the requirements that apply to spark-ignition engines under 40 CFR parts 85 and 86 or part 1048 for the appropriate model year. If you comply with all the provisions of this section, we consider the certificate issued under 40 CFR part 86 or 1048 for each engine to also be a valid certificate of conformity under this part 1045 for its model year, without a separate application for certification under the requirements of this part 1045.

(b) *Vessel-manufacturer provisions.* If you are not an engine manufacturer, you may produce vessels using motor vehicle engines or nonroad spark-ignition engines under this section as long

as you meet all the requirements and conditions specified in paragraph (d) of this section. If you modify the engine in any of the ways described in paragraph (d)(2) of this section, we will consider you a manufacturer of a new propulsion marine engine. Such engine modifications prevent you from using the provisions of this section.

(c) *Liability*. Engines for which you meet the requirements of this section are exempt from all the requirements and prohibitions of this part, except for those specified in this section. Engines exempted under this section must meet all the applicable requirements from 40 CFR parts 85 and 86, or part 1048. This applies to engine manufacturers, vessel manufacturers who use these engines, and all other persons as if these engines were used in applications other than for installation as propulsion marine engines. The prohibited acts of 40 CFR 1068.101(a)(1) apply to these new engines and vessels; however, we consider the certificate issued under 40 CFR part 86 or 1048 for each engine to also be a valid certificate of conformity under this part 1045 for its model year. If we make a determination that these engines do not conform to the regulations during their useful life, we may require you to recall them under 40 CFR part 86 or 1068.

(d) *Specific requirements*. If you are an engine or vessel manufacturer and meet all the following criteria and requirements regarding your new propulsion marine engine, the engine is eligible for an exemption under this section:

(1) Your engine must be covered by a valid certificate of conformity issued under 40 CFR part 86 or 1048.

(2) You must not make any changes to the certified engine that could reasonably be expected to increase its exhaust emissions for any pollutant, or its evaporative emissions. For example, if you make any of the following changes to one of these engines, you do not qualify for this exemption:

(i) Change any fuel-system or evaporative-system parameters from the certified configuration (this does not apply to refueling controls).

(ii) Change, remove, or fail to properly install any other component, element of design, or calibration specified in the engine manufacturer's application for certification. This includes aftertreatment devices and all related components.

(iii) Modify or design the marine engine cooling system so that temperatures or heat rejection rates are outside the original engine manufacturer's specified ranges.

(3) You must show that fewer than 10 percent of the engine family's total sales in the United States are used in marine applications. This includes engines used in any application without regard to which company manufactures the vessel or equipment. Show this as follows:

(i) If you are the original manufacturer of the engine, base this showing on your sales information.

(ii) In all other cases, you must get the original manufacturer of the engine to confirm this based on its sales information.

(4) You must ensure that the engine has the label we require under 40 CFR part 86 or 1048.

(5) You must add a permanent supplemental label to the engine in a position where it will remain clearly visible after installation in the vessel. In the supplemental label, do the following:

(i) Include the heading: ''MARINE ENGINE EMISSION CONTROL INFORMATION''.

(ii) Include your full corporate name and trademark. You may instead include the full corporate name and trademark of another company you choose to designate.

(iii) State: ''THIS ENGINE WAS ADAPTED FOR MARINE USE WITHOUT AFFECTING ITS EMISSION CONTROLS.''

(iv) If the modified engine is certified as a motor vehicle engine, also state: ''THE EMISSION CONTROL SYSTEM DEPENDS ON THE USE OF FUEL MEETING SPECIFICATIONS THAT APPLY FOR MOTOR VEHICLE APPLICATIONS. OPERATING THE ENGINE ON OTHER FUELS MAY BE A VIOLATION OF FEDERAL LAW.''

(v) State the date you finished modifying the engine (month and year), if applicable.

(6) The original and supplemental labels must be readily visible after the engine is installed in the vessel or, if

the vessel obscures the engine's emission control information label, the vessel manufacturer must attach duplicate labels, as described in 40 CFR 1068.105.

(7) Send the Designated Compliance Officer a signed letter by the end of each calendar year (or less often if we tell you) with all the following information:

(i) Identify your full corporate name, address, and telephone number.

(ii) List the engine or vessel models you expect to produce under this exemption in the coming year and describe your basis for meeting the sales restrictions of paragraph (d)(3) of this section.

(iii) State: ''We produce each listed [engine or vessel] model without making any changes that could increase its certified emission levels, as described in 40 CFR 1045.605.''

(e) *Failure to comply*. If your engines do not meet the criteria listed in paragraph (d) of this section, they will be subject to the standards, requirements, and prohibitions of this part 1045 and the certificate issued under 40 CFR part 86 or 1048 will not be deemed to also be a certificate issued under this part 1045. Introducing these engines into U.S. commerce without a valid exemption or certificate of conformity under this part violates the prohibitions in 40 CFR 1068.101(a)(1).

(f) *Data submission*. We may require you to send us emission test data on one of the duty cycles specified in subpart F of this part.

(g) *Participation in averaging, banking and trading*. Engines adapted for marine use under this section may not generate or use emission credits under this part 1045. These engines may generate credits under the ABT provisions in 40 CFR part 86. These engines must use emission credits under 40 CFR part 86 if they are certified to an FEL above a standard that applies under 40 CFR part 86.

§ 1045.610 What provisions apply to using engines already certified to Small SI emission standards?

This section applies to marine engines that are identical to land-based engines certified under 40 CFR part 90 or 1054. See § 1045.605 for provisions that apply to marine engines that are certified under other programs.

(a) If an engine meets all the following criteria, it is exempt from the requirements of this part:

(1) The engine must be in an engine family that has a valid certificate of conformity showing that it meets emission standards for nonhandheld engines under 40 CFR part 90 or 1054 for the appropriate model year.

(2) You must show that fewer than 5 percent of the engine family's total sales in the United States are used in marine applications. This includes engines used in any application without regard to which company manufactures the vessel or equipment.

Show this as follows:

(i) If you are the original manufacturer of the engine, base this showing on your sales information.

(ii) In all other cases, you must get the original manufacturer of the engine to confirm this based on its sales information.

(b) The only requirements or prohibitions from this part that apply to an engine that meets the criteria in paragraph (a) of this section are in this section.

(c) Engines exempted under this section are subject to all the requirements affecting engines under 40 CFR part 90 or 1054. The requirements and restrictions of 40 CFR part 90 or 1054 apply to anyone manufacturing these engines, anyone manufacturing equipment that uses these engines, and all other persons in the same manner as if these engines were not used as propulsion marine engines.

(d) You may use the provisions of § 1045.605 in addition to the provisions of this section for engines certified under 40 CFR part 1054. Where § 1045.605 references 40 CFR parts 85, 86, and/or 1048, apply the applicable provisions of 40 CFR part 1054 instead. Include the engines you sell under this section in your demonstration that you meet the sales limit in § 1045.605(d)(3).

§ 1045.620 What are the provisions for exempting engines used solely for competition?

The provisions of this section apply for new engines and vessels built on or after January 1, 2010.

(a) We may grant you an exemption from the standards and requirements of this part for a new engine on the grounds that it is to be used solely for competition. The requirements of this part, other than those in this section, do not apply to engines that we exempt for use solely for competition.

(b) We will exempt engines that we determine will be used solely for competition. The basis of our determination is described in paragraphs (c) and (d) of this section. Exemptions granted under this section are good for only one model year and you must request renewal for each subsequent model year. We will not approve your renewal request if we determine the engine will not be used solely for competition.

(c) Engines meeting all the following criteria are considered to be used solely for competition:

(1) Neither the engine nor any vessels containing the engine may be displayed for sale in any public dealership or otherwise offered for sale to the general public. Note that this does not preclude display of these engines as long as they are not available for sale to the general public.

(2) Sale of the vessel in which the engine is installed must be limited to professional racing teams, professional racers, or other qualified racers. For replacement engines, the sale of the engine itself must be limited to professional racing teams, professional racers, other qualified racers, or to the original vessel manufacturer.

(3) The engine and the vessel in which it is installed must have performance characteristics that are substantially superior to noncompetitive models.

(4) The engines are intended for use only as specified in paragraph (e) of this section.

(d) You may ask us to approve an exemption for engines not meeting the criteria listed in paragraph (c) of this section as long as you have clear and convincing evidence that the engines will be used solely for competition.

(e) Engines are considered to be used solely for competition only if their use is limited to competition events sanctioned by the U.S. Coast Guard or another public organization with authorizing permits for participating competitors. Operation of such engines may include only racing events, trials to qualify for racing events, and practice associated with racing events. Authorized attempts to set speed records are also considered racing events. Engines will not be considered to be used solely for competition if they are ever used for any recreational or other noncompetitive purpose. Use of exempt engines in any recreational events, such as poker runs and lobsterboat races, is a violation of 40 CFR 1068.101(b)(4).

(f) You must permanently label engines exempted under this section to clearly indicate that they are to be used only for competition. Failure to properly label an engine will void the exemption for that engine.

(g) If we request it, you must provide us any information we need to determine whether the engines are used solely for competition. This would include documentation regarding the number of engines and the ultimate purchaser of each engine as well as any documentation showing a vessel manufacturer's request for an exempted engine. Keep these records for five years.

§ 1045.625 What requirements apply under the Diurnal Transition Program?

The provisions of this section allow vessel manufacturers to produce a certain number of vessels with installed fuel tanks that do not meet the diurnal emission standards specified in § 1045.112(d) and 40 CFR 1060.105. The provisions of this section do not apply for portable marine fuel tanks, personal watercraft, or outboard engines with under-cowl fuel tanks. Vessels you produce under this section are exempt from the prohibitions in 40 CFR 1068.101(a)(1) with respect to diurnal emissions, subject to the provisions of this section.

(a) *General.* If you are a vessel manufacturer, you may introduce into U.S. commerce limited numbers of exempted vessels under this section. You may use the exemptions in this section only if you have primary responsibility for designing and manufacturing vessels and your manufacturing procedures include installing some engines in these vessels. Consider all U.S.-directed vessel sales in showing that you meet the

requirements of this section, including those from any parent or subsidiary companies and those from any other companies you license to produce vessels for you. These provisions are available for vessels you produce during the periods specified in paragraph (b) of this section.

(b) *Allowances*. You may choose one of the following options to produce exempted vessels under this section:

(1) *Percent-of-production allowances*. You may produce up to 50 percent of your vessels from July 31, 2011 through July 31, 2012 that are exempt from the diurnal emission standards. Calculate this percentage based on your total U.S.-directed production volume.

(2) *Small-volume allowances*. Small-volume vessel manufacturers may produce up to 1200 vessels from July 31, 2011 through July 31, 2013 that are exempt from the diurnal emission standards.

(c) *Vessel labeling*. You must add a permanent label, written legibly in English, to a readily visible part of each exempted vessel you produce under this section. You may combine this with the label required under 40 CFR 1060.135. This label must include at least the following items:

(1) The label heading ''EMISSION CONTROL INFORMATION''.

(2) Your corporate name and trademark.

(3) The vessel's date of manufacture.

(4) The following statement: ''THIS VESSEL IS EXEMPT FROM DIURNAL STANDARDS UNDER 40 CFR 1045.625.''

(d) *Notification and reporting*. You must notify us of your intent to use the provisions of this section and send us an annual report to verify that you are not exceeding the allowances, as follows:

(1) Before you produce vessels that are exempt under this section, send the Designated Compliance Officer a written notice of your intent with the following information:

(i) Identify your company's name and address, and your parent company's name and address, if applicable.

(ii) Identify the name, e-mail address, and phone number of a person to contact for further information.

(iii) Identify the name and address of the company you expect to produce the fuel tanks you will be using for the vessels exempted under this section.

(iv) If you qualify as a small-volume vessel manufacturer, state whether you will comply under paragraph (b)(1) or (b)(2) of this section.

(v) Include your production figures for the period from July 31, 2009 through July 31, 2010, including figures broken down by model.

(2) Send the Designated Compliance Officer a written report by December 31, 2012. If you are a small-volume manufacturer using the provisions of paragraph (b)(2) of this section to produce exempted vessels after July 31, 2012, send us a second report by December 31, 2013. These reports must include the total number of vessels and the number of exempted vessels you sold in the preceding year for each model, based on actual U.S.-directed production information. You may omit the count of compliant vessels if you include in the report a statement that you are not using the percent-of-production allowances in paragraph (b)(1) of this section. If you initially comply using the percent-of-production allowances in paragraph (b)(1) of this section, you may not use the small-volume allowances in paragraph (b)(2) of this section for later production.

(3) If you send your initial notification under paragraph (d)(1) of this section after the specified deadline, we may approve your use of allowances under this section. In your request, describe why you were unable to meet the deadline. We will not approve your request if the delay could have been avoided with reasonable care and discretion.

(e) *Recordkeeping*. Keep the following records of all exempted vessels you produce under this section:

(1) The model number, serial number, and the date of manufacture for each vessel.

(2) The total number or percentage of exempted vessels as described in paragraph (b) of this section and all documentation supporting your calculation.

(3) The notifications and reports we require under paragraph (d) of this section.

(f) *Provisions for fuel tank manufacturers*. As a fuel tank manufacturer, you may produce fuel tanks as needed for

vessel manufacturers under this section without our prior approval. These fuel tanks are exempt from the diurnal emission standards. Note that this diurnal exemption does not affect the requirements related to permeation emissions specified in §1045.112. You must have written assurance from vessel manufacturers that they need a certain number of exempted fuel tanks under this section. You must keep records of the number of exempted fuel tanks you sell to each vessel manufacturer.

(g) *Enforcement.* Producing more exempted vessels than we allow under this section violates the prohibitions in 40 CFR 1068.101(a)(1). Vessel manufacturers and fuel tank manufacturers must keep the records we require under this section until at least December 31, 2017 and give them to us if we ask for them (see 40 CFR 1068.101(a)(2)).

§1045.630 What is the personal-use exemption.

This section applies to individuals who manufacture recreational vessels for personal use with used engines. If you and your vessel meet all the conditions of this section, the vessel and its engine are considered to be exempt from the standards and requirements of this part that apply to new engines, including standards and requirements related to evaporative emissions. For example, you are not required to use certified fuel system components or otherwise obtain certificates of conformity showing that the vessel meets evaporative emission standards, and you do not need to install a certified engine.

(a) The vessel may not be manufactured from a previously certified vessel, nor may it be manufactured from a partially complete vessel that is equivalent to a certified vessel. The vessel must be manufactured primarily from unassembled components, but may incorporate some preassembled components. For example, fully preassembled steering assemblies may be used. You may also power the vessel with an engine that was previously used in a highway or land-based nonroad application.

(b) The vessel may not be sold within five years after the date of final assembly.

(c) No individual may manufacture more than one vessel in any five-year period under this exemption.

(d) You may not use the vessel in any revenue-generating service or for any other commercial purpose. For example, this exemption does not apply for vessels used in commercial fishing or charter service.

(e) This exemption may not be used to circumvent the requirements of this part or the requirements of the Clean Air Act. For example, this exemption would not cover a case in which a person sells an almost completely assembled vessel to another person, who would then complete the assembly. This would be considered equivalent to the sale of the complete new vessel. This section also does not allow engine manufacturers to produce new engines that are exempt from emission standards and it does not provide an exemption from the prohibition against tampering with certified engines.

§1045.635 What special provisions apply for small-volume engine manufacturers?

This section describes how we apply the special provisions in this part for small-volume engine manufacturers.

(a) Special provisions apply for certain small-volume engine manufacturers, as illustrated by the following examples:

(1) Additional lead time and other provisions related to the transition to new emission standards. See §1045.145.

(2) More flexible arrangements for creating engine families for high-performance engines. See §1045.230.

(3) Assigned deterioration factors. See §1045.240.

(4) Waived requirements for production-line testing. See §1045.301.

(5) Additional special provisions apply for small-volume engine and vessel manufacturers. For example, see §1045.625 and 40 CFR 1068.250.

(b) If you use any of the provisions of this part that apply specifically to small-volume engine manufacturers and we find that you do not qualify to use these provisions, we may consider you to be in violation of the requirements that apply for companies that are not small-volume engine manufacturers. If your number of employees

grows to the point that you no longer qualify as a small-volume engine manufacturer, we will work with you to determine a reasonable schedule for complying with additional requirements that apply. For example, if you no longer qualify as a small-volume engine manufacturer shortly before you certify your engines for the next model year, we might allow you to use assigned deterioration factors for one more model year.

§ 1045.640 What special provisions apply to branded engines?

The following provisions apply if you identify the name and trademark of another company instead of your own on your emission control information label, as provided by § 1045.135(c)(2):

(a) You must have a contractual agreement with the other company that obligates that company to take the following steps:

(1) Meet the emission warranty requirements that apply under § 1045.120. This may involve a separate agreement involving reimbursement of warranty-related expenses.

(2) Report all warranty-related information to the certificate holder.

(b) In your application for certification, identify the company whose trademark you will use.

(c) You remain responsible for meeting all the requirements of this chapter, including warranty and defect-reporting provisions.

§ 1045.645 What special provisions apply for converting an engine to use an alternate fuel?

A certificate of conformity is no longer valid for an engine if the engine is modified such that it is not in a configuration covered by the certificate. This section applies if such modifications are done to convert the engine to run on a different fuel type. Such engines may need to be recertified as specified in this section if the certificate is no longer valid for that engine.

(a) Converting a certified new engine to run on a different fuel type violates 40 CFR 1068.101(a)(1) if the modified engine is not covered by a certificate of conformity.

(b) Converting a certified engine that is not new to run on a different fuel type violates 40 CFR 1068.101(b)(1) if the modified engine is not covered by a certificate of conformity. We may specify alternate certification provisions consistent with the requirements of this part. For example, you may certify the modified engine for a partial useful life. For example, if the engine is modified halfway through its original useful life period, you may generally certify the engine based on completing the original useful life period; or if the engine is modified after the original useful life period is past, you may generally certify the engine based on testing that does not involve further durability demonstration.

(c) Engines may be certified using the certification procedures for new engines as specified in this part or using the certification procedures for aftermarket parts as specified in 40 CFR part 85, subpart V. Unless the original engine manufacturer continues to be responsible for the engine as specified in paragraph (d) of this section, you must remove the original engine manufacturer's emission control information label if you recertify the engine.

(d) The original manufacturer is not responsible for operation of modified engines in configurations resulting from modifications performed by others. In cases where the modification allows an engine to be operated in either its original configuration or a modified configuration, the original manufacturer remains responsible for operation of the modified engine in its original configuration.

(e) Entities producing conversion kits may obtain certificates of conformity for the converted engines. Such entities are engine manufacturers for purposes of this part.

§ 1045.650 Do delegated-assembly provisions apply for marine engines?

The provisions of 40 CFR 1068.261 related to delegated final assembly do not apply for marine spark-ignition engines certified under this part 1045. This means that for engines requiring exhaust aftertreatment (such as catalysts), the engine manufacturers must either install the aftertreatment on the engine before introducing it into

U.S. commerce or ship the aftertreatment along with the engine.

§ 1045.655 What special provisions apply for installing and removing altitude kits?

An action for the purpose of installing or modifying altitude kits and performing other changes to compensate for changing altitude is not considered a prohibited act under 40 CFR 1068.101(b) as long as as it is done consistent with the manufacturer's instructions.

§ 1045.660 How do I certify outboard or personal watercraft engines for use in jet boats?

(a) This section describes how to certify outboard or personal watercraft engines for use in jet boats. To be certified under this section, the jet boat engines must be identical in all physical respects to the corresponding outboard or personal watercraft engines, but may differ slightly with respect to engine calibrations.

(b) The outboard or personal watercraft engines must meet all the applicable requirements for outboard or personal watercraft engines. Jet boat engines certified under this section must meet all the applicable requirements for sterndrive/inboard engines.

(c) The jet boat engines must be in an engine family separate from the corresponding outboard or personal watercraft engines.

(d) Jet boat engine families may use emission credits from outboard or personal watercraft engine families, as described in § 1045.701(d).

(e) Jet-boat engines certified under the provisions of this section must meet emission standards over the same useful-life period that applies to the corresponding outboard or personal watercraft engine family, as described in § 1045.103(e).

Subpart H—Averaging, Banking, and Trading for Certification

§ 1045.701 General provisions.

(a) You may average, bank, and trade (ABT) emission credits for purposes of certification as described in this subpart to show compliance with the standards of this part. This applies for engines with respect to exhaust emissions and for vessels with respect to evaporative emissions. Participation in this program is voluntary.

(b) The definitions of subpart I of this part apply to this subpart. The following definitions also apply:

(1) *Actual emission credits* means emission credits you have generated that we have verified by reviewing your final report.

(2) *Averaging set* means a set of engines (or vessels) in which emission credits may be exchanged only with other engines (or vessels) in the same averaging set.

(3) *Broker* means any entity that facilitates a trade of emission credits between a buyer and seller.

(4) *Buyer* means the entity that receives emission credits as a result of a trade.

(5) *Family* means engine family for exhaust credits or emission family for evaporative credits.

(6) *Reserved emission credits* means emission credits you have generated that we have not yet verified by reviewing your final report.

(7) *Seller* means the entity that provides emission credits during a trade.

(8) *Standard* means the emission standard that applies under subpart B of this part for engines or fuel-system components not participating in the ABT program of this subpart.

(9) *Trade* means to exchange emission credits, either as a buyer or seller.

(c) You may not average or exchange banked or traded exhaust credits with evaporative credits, or vice versa. Evaporative credits generated by any vessels under this part may be used by any vessels under this part. Exhaust credits may be exchanged only within an averaging set. Except as specified in paragraph (d) of this section, the following criteria define the applicable exhaust averaging sets:

(1) Sterndrive/inboard engines.

(2) Outboard and personal watercraft engines.

(d) Sterndrive/inboard engines certified under § 1045.660 for jet boats may use $HC+NO_X$ and CO exhaust credits generated from outboard and personal watercraft engines, as long as the credit-using engine is the same model as an

engine model from an outboard or personal watercraft family. Such emission credits that you generate under this part 1045 may be used for averaging, but not for banking or trading. The FEL caps for such jet boat families are the $HC+NO_X$ and CO standard for outboard and personal watercraft engines. U.S.-directed sales from jet boat engines using the provisions of this paragraph (d) may not be greater than the U.S.-directed sales of the same engine model for outboard or personal watercraft engines.

(e) You may not generate evaporative credits based on permeation measurements from metal fuel tanks or portable marine fuel tanks.

(f) You may not use emission credits generated under this subpart to offset any emissions that exceed an FEL or standard. This applies for all testing, including certification testing, in-use testing, selective enforcement audits, and other production-line testing. However, if exhaust emissions from an engine exceed an exhaust FEL or standard (for example, during a selective enforcement audit), you may use emission credits to recertify the family with a higher FEL that applies only to future production.

(g) Emission credits may be used for averaging in the model year they are generated or banked for averaging in future model years, except that CO emission credits for outboard and personal watercraft engines may not be banked or traded.

(h) You may increase or decrease an exhaust FEL during the model year by amending your application for certification under § 1045.225.

(i) Engine and vessel manufacturers certifying with respect to evaporative emissions may use emission credits to demonstrate compliance under this subpart. Component manufacturers may establish FELs for their certified products, but they may not generate or use emission credits under this subpart.

(j) In your application for certification, base your showing of compliance on projected production volumes for engines or vessels intended for sale in the United States. As described in § 1045.730, compliance with the requirements of this subpart is determined at the end of the model year based on actual production volumes for engines or vessels intended for sale in the United States. Do not include any of the following engines or vessels to calculate emission credits:

(1) Engines or vessels exempted under subpart G of this part or under 40 CFR part 1068.

(2) Engines or vessels intended for export.

(3) Engines or vessels that are subject to state emission standards for that model year. However, this restriction does not apply if we determine that the state standards and requirements are equivalent to those of this part and that products sold in such a state will not generate credits under the state program. For example, you may not include engines or vessels certified for California if California has more stringent emission standards for these products or if your products generate or use emission credits under the California program.

(4) Engines or vessels not subject to the requirements of this part, such as those excluded under § 1045.5.

(5) Any other engines or vessels where we indicate elsewhere in this part 1045 that they are not to be included in the calculations of this subpart.

[73 FR 59194, Oct. 8, 2008, as amended at 75 FR 23020, Apr. 30, 2010]

§ 1045.705 How do I generate and calculate exhaust emission credits?

The provisions of this section apply for calculating exhaust emission credits for $HC+NO_X$ or CO. You may generate exhaust emission credits only if you are a certifying engine manufacturer.

(a) For each participating family, calculate positive or negative emission credits relative to the otherwise applicable emission standard. Calculate positive emission credits for a family that has an FEL below the standard. Calculate negative emission credits for a family that has an FEL above the standard. Sum your positive and negative credits for the model year before rounding. Round the sum of emission credits to the nearest kilogram (kg) using consistent units throughout the following equation:

Emission credits (kg) = (STD − FEL) × (Volume) × (Power) × (UL) × (LF) × (10^{-3})

Where:

STD = the emission standard, in g/kW-hr.

FEL = the family emission limit for the family, in g/kW-hr.

Volume = the number of engines eligible to participate in the averaging, banking, and trading program within the given family during the model year, as described in § 1045.701(j).

Power = maximum engine power for the family, in kilowatts (*see* § 1045.140).

UL = The useful life for the given family.

LF = load factor. Use 0.207. We may specify a different load factor if we approve the use of special test procedures for an engine family under 40 CFR 1065.10(c)(2), consistent with good engineering judgment.

(b) [Reserved]

[73 FR 59194, Oct. 8, 2008, as amended at 75 FR 23020, Apr. 30, 2010]

§ 1045.706 How do I generate and calculate evaporative emission credits?

The provisions of this section apply for calculating evaporative emission credits. This applies only for fuel tank permeation. You may generate credits only if you are a certifying vessel manufacturer. This may include outboard engine manufacturers if they install under-cowl fuel tanks.

(a) For each participating vessel, calculate positive or negative emission credits relative to the otherwise applicable emission standard. Calculate positive emission credits for a family that has an FEL below the standard. Calculate negative emission credits for a family that has an FEL above the standard. Sum your positive and negative credits for the model year before rounding. Round the sum of emission credits to the nearest kilogram (kg) using consistent units throughout the following equation:

Emission credits (kg) = (STD − FEL) × (Total Area) × (UL) × (AF) × (365) × (10^{-3})

Where:

STD = the emission standard, in g/m²/day.

FEL = the family emission limit for the family, in g/m²/day, as described in paragraph (b) of this section.

Total Area = The combined internal surface area of all fuel tanks in the family, in m².

UL = 5 years, which represents the useful life for the given family.

AF = adjustment factor. Use 1.0 for fuel tank testing performed at 28 °C and 0.60 for testing performed at 40 °C.

(b) For calculating credits under paragraph (a) of this section, the emission standard and FEL must both be based on test measurements at the same temperature (28 ° or 40 °C). Determine the FEL for calculating emission credits (relative to testing at 28 °C) as follows:

(1) To use an FEL below 5.0 g/m²/day, it must be based on emission measurements.

(2) The provisions of this paragraph (b)(2) apply for all emission families with FELs at or above 5.0 g/m²/day. To calculate emission credits for such emission families, you must choose from one of the following options and apply it to all your emission families with FELs at or above 5.0 g/m²/day:

(i) Option 1: Establish all your FELs based on emission measurements. This may include measurements from a certifying fuel tank manufacturer.

(ii) Option 2: Use an assigned FEL of 10.4 g/m²/day. This would apply without regard to whether any of these emission families have measured emission levels below 10.4 g/m²/day. If any of your fuel tanks were otherwise certified (by you or the fuel tank manufacturer) with an FEL between 5.0 and 10.4 g/m²/day, the assigned FEL of 10.4 g/m²/day applies only for emission credit calculations.

§ 1045.710 How do I average emission credits?

(a) Averaging is the exchange of emission credits among your families. You may average emission credits only within the same averaging set.

(b) You may certify one or more families to an FEL above the emission standard, subject to the FEL caps and other provisions in subpart B of this part, if you show in your application for certification that your projected balance of all emission-credit transactions in that model year is greater than or equal to zero.

(c) If you certify a family to an FEL that exceeds the otherwise applicable standard, you must obtain enough emission credits to offset the family's

deficit by the due date for the final report required in § 1045.730. The emission credits used to address the deficit may come from your other families that generate emission credits in the same model year, from emission credits you have banked, or from emission credits you obtain through trading.

§ 1045.715 How do I bank emission credits?

(a) Banking is the retention of emission credits by the manufacturer generating the emission credits for use in future model years for averaging or trading. You may use banked emission credits only within the averaging set in which they were generated, except as described in this subpart.

(b) You may designate any emission credits you plan to bank in the reports you submit under § 1045.730. During the model year and before the due date for the final report, you may designate your reserved emission credits for averaging or trading.

(c) Reserved credits become actual emission credits when you submit your final report. However, we may revoke these emission credits if we are unable to verify them after reviewing your reports or auditing your records.

§ 1045.720 How do I trade emission credits?

(a) Trading is the exchange of emission credits between manufacturers. You may use traded emission credits for averaging, banking, or further trading transactions. Traded emission credits may be used only within the averaging set in which they were generated, except as described in this subpart.

(b) You may trade actual emission credits as described in this subpart. You may also trade reserved emission credits, but we may revoke these emission credits based on our review of your records or reports or those of the company with which you traded emission credits. You may trade banked credits within an averaging set to any certifying engine or vessel manufacturer.

(c) If a negative emission credit balance results from a transaction, both the buyer and seller are liable, except in cases we deem to involve fraud. See § 1045.255(e) for cases involving fraud. We may void the certificates of all families participating in a trade that results in a manufacturer having a negative balance of emission credits. See § 1045.745.

§ 1045.725 What must I include in my application for certification?

(a) You must declare in your application for certification your intent to use the provisions of this subpart for each family that will be certified using the ABT program. You must also declare the FELs you select for the family for each pollutant for which you are using the ABT program. Your FELs must comply with the specifications of subpart B of this part, including the FEL caps. FELs must be expressed to the same number of decimal places as the emission standard.

(b) Include the following in your application for certification:

(1) A statement that, to the best of your belief, you will not have a negative balance of emission credits for any averaging set when all emission credits are calculated at the end of the year.

(2) Detailed calculations of projected emission credits (positive or negative) based on projected production volumes. We may require you to include similar calculations from your other engine families to demonstrate that you will be able to avoid a negative credit balance for the model year. If you project negative emission credits for a family, state the source of positive emission credits you expect to use to offset the negative emission credits.

§ 1045.730 What ABT reports must I send to EPA?

(a) If any of your families are certified using the ABT provisions of this subpart, you must send an end-of-year report within 90 days after the end of the model year and a final report within 270 days after the end of the model year. We may waive the requirement to send the end-of year report as long as you send the final report on time.

(b) Your end-of-year and final reports must include the following information for each family participating in the ABT program:

(1) Family designation.

(2) The emission standards that would otherwise apply to the family.

(3) The FEL for each pollutant. If you change the FEL after the start of production, identify the date that you started using the new FEL and/or give the engine identification number for the first engine covered by the new FEL. In this case, identify each applicable FEL and calculate the positive or negative emission credits under each FEL.

(4) The projected and actual production volumes for the model year with a point of retail sale in the United States, as described in §1045.701(j). For fuel tanks, state the production volume in terms of total surface area and production volume for each tank configuration and state the total surface area for the emission family. If you changed an FEL during the model year, identify the actual production volume associated with each FEL.

(5) Maximum engine power for each engine configuration, and your declared value of maximum engine power for the engine family (see §1045.140).

(6) Useful life.

(7) Calculated positive or negative emission credits for the whole family. Identify any emission credits that you traded, as described in paragraph (d)(1) of this section.

(c) Your end-of-year and final reports must include the following additional information:

(1) Show that your net balance of emission credits from all your participating families in each averaging set in the applicable model year is not negative.

(2) State whether you will retain any emission credits for banking.

(3) State that the report's contents are accurate.

(d) If you trade emission credits, you must send us a report within 90 days after the transaction, as follows:

(1) As the seller, you must include the following information in your report:

(i) The corporate names of the buyer and any brokers.

(ii) A copy of any contracts related to the trade.

(iii) The families that generated emission credits for the trade, including the number of emission credits from each family.

(2) As the buyer, you must include the following information in your report:

(i) The corporate names of the seller and any brokers.

(ii) A copy of any contracts related to the trade.

(iii) How you intend to use the emission credits, including the number of emission credits you intend to apply to each family (if known).

(e) Send your reports electronically to the Designated Compliance Officer using an approved information format. If you want to use a different format, send us a written request with justification for a waiver.

(f) Correct errors in your end-of-year report or final report as follows:

(1) You may correct any errors in your end-of-year report when you prepare the final report as long as you send us the final report by the time it is due.

(2) If you or we determine within 270 days after the end of the model year that errors mistakenly decreased your balance of emission credits, you may correct the errors and recalculate the balance of emission credits. You may not make these corrections for errors that are determined more than 270 days after the end of the model year. If you report a negative balance of emission credits, we may disallow corrections under this paragraph (f)(2).

(3) If you or we determine anytime that errors mistakenly increased your balance of emission credits, you must correct the errors and recalculate the balance of emission credits.

§1045.735 What records must I keep?

(a) You must organize and maintain your records as described in this section. We may review your records at any time.

(b) Keep the records required by this section for at least eight years after the due date for the end-of-year report. You may not use emission credits for any engines or vessel if you do not keep all the records required under this section. You must therefore keep these records to continue to bank valid credits. Store these records in any format and on any media as long as you can

promptly send us organized, written records in English if we ask for them. You must keep these records readily available. We may review them at any time.

(c) Keep a copy of the reports we require in §§ 1045.725 and 1045.730.

(d) Keep records of the engine identification number for each engine or vessel you produce that generates or uses emission credits under the ABT program. You may identify these numbers as a range.

(e) We may require you to keep additional records or to send us relevant information not required by this section in accordance with the Clean Air Act.

§ 1045.745 What can happen if I do not comply with the provisions of this subpart?

(a) For each family participating in the ABT program, the certificate of conformity is conditional upon full compliance with the provisions of this subpart during and after the model year. You are responsible to establish to our satisfaction that you fully comply with applicable requirements. We may void the certificate of conformity for a family if you fail to comply with any provisions of this subpart.

(b) You may certify your family to an FEL above an emission standard based on a projection that you will have enough emission credits to offset the deficit for the family. However, we may void the certificate of conformity if you cannot show in your final report that you have enough actual emission credits to offset a deficit for any pollutant in a family.

(c) We may void the certificate of conformity for a family if you fail to keep records, send reports, or give us information we request.

(d) You may ask for a hearing if we void your certificate under this section (see § 1045.820).

Subpart I—Definitions and Other Reference Information

§ 1045.801 What definitions apply to this part?

The following definitions apply to this part. The definitions apply to all subparts unless we note otherwise. All undefined terms have the meaning the Clean Air Act gives to them. The definitions follow:

Adjustable parameter means any device, system, or element of design that someone can adjust (including those which are difficult to access) and that, if adjusted, may affect emissions or engine performance during emission testing or normal in-use operation. This includes, but is not limited to, parameters related to injection timing and fueling rate. You may ask us to exclude a parameter that is difficult to access if it cannot be adjusted to affect emissions without significantly degrading engine performance, or if you otherwise show us that it will not be adjusted in a way that affects emissions during in-use operation.

Aftertreatment means relating to a catalytic converter, particulate filter, or any other system, component, or technology mounted downstream of the exhaust valve (or exhaust port) whose design function is to decrease emissions in the engine exhaust before it is exhausted to the environment. Exhaust-gas recirculation (EGR), turbochargers, and oxygen sensors are not aftertreatment.

Alcohol-fueled engine means an engine that is designed to run using an alcohol fuel. For purposes of this definition, alcohol fuels do not include fuels with a nominal alcohol content below 25 percent by volume.

Amphibious vehicle means a vehicle with wheels or tracks that is designed primarily for operation on land and secondarily for operation in water.

Applicable emission standard or *applicable standard* means an emission standard to which an engine (or vessel) is subject. Additionally, if an engine (or vessel) has been or is being certified to another standard or FEL, *applicable emission standard* means the FEL or other standard to which the engine (or vessel) has been or is being certified. This definition does not apply to subpart H of this part.

Auxiliary emission control device means any element of design that senses temperature, motive speed, engine RPM, transmission gear, or any other parameter for the purpose of activating, modulating, delaying, or deactivating the operation of any part of the emission control system.

Brake power means the usable power output of the engine, not including power required to fuel, lubricate, or heat the engine, circulate coolant to the engine, or to operate aftertreatment devices.

Calibration means the set of specifications and tolerances specific to a particular design, version, or application of a component or assembly capable of functionally describing its operation over its working range.

Carryover means relating to certification based on emission data generated from an earlier model year, as described in § 1045.235(d).

Certification means relating to the process of obtaining a certificate of conformity for an engine family that complies with the emission standards and requirements in this part.

Certified emission level means the highest deteriorated emission level in an engine family for a given pollutant from either transient or steady-state testing.

Clean Air Act means the Clean Air Act, as amended, 42 U.S.C. 7401–7671q.

Conventional sterndrive/inboard engine means a sterndrive/inboard engine that is not a high-performance engine.

Crankcase emissions means airborne substances emitted to the atmosphere from any part of the engine crankcase's ventilation or lubrication systems. The crankcase is the housing for the crankshaft and other related internal parts.

Critical emission-related component means any of the following components:

(1) Electronic control units, aftertreatment devices, fuel-metering components, EGR-system components, crankcase-ventilation valves, all components related to charge-air compression and cooling, and all sensors and actuators associated with any of these components.

(2) Any other component whose primary purpose is to reduce emissions.

Date of manufacture has the meaning given in 40 CFR 1068.30.

Days means calendar days unless otherwise specified. For example, when we specify working days we mean calendar days, excluding weekends and U.S. national holidays.

Designated Compliance Officer means the Manager, Heavy-Duty and Nonroad Engine Group (6405–J), U.S. Environmental Protection Agency, 1200 Pennsylvania Ave., NW., Washington, DC 20460.

Designated Enforcement Officer means the Director, Air Enforcement Division (2242A), U.S. Environmental Protection Agency, 1200 Pennsylvania Ave., NW.,Washington, DC 20460.

Deteriorated emission level means the emission level that results from applying the appropriate deterioration factor to the official emission result of the emission-data engine.

Deterioration factor means the relationship between emissions at the end of useful life and emissions at the low-hour test point (see §§ 1045.240 and 1045.245), expressed in one of the following ways:

(1) For multiplicative deterioration factors, the ratio of emissions at the end of useful life to emissions at the low-hour test point.

(2) For additive deterioration factors, the difference between emissions at the end of useful life and emissions at the low-hour test point.

Discrete-mode means relating to the discrete-mode type of steady-state test described in § 1045.505.

Dual fuel means relating to an engine designed for operation on two different fuels but not on a continuous mixture of those fuels.

Emission control system means any device, system, or element of design that controls or reduces the emissions of regulated pollutants from an engine.

Emission-data engine means an engine that is tested for certification. This includes engines tested to establish deterioration factors.

Emission-related maintenance means maintenance that substantially affects emissions or is likely to substantially affect emission deterioration.

Engine has the meaning given in 40 CFR 1068.30. This includes complete and partially complete engines.

Engine configuration means a unique combination of engine hardware and calibration within an engine family. Engines within a single engine configuration differ only with respect to normal production variability.

Engine family has the meaning given in § 1045.230.

Engine manufacturer means the manufacturer of the engine. See the definition of ''manufacturer'' in this section.

Evaporative means relating to fuel emissions controlled by 40 CFR part 1060. This generally includes emissions that result from permeation of fuel through the fuel-system materials or from ventilation of the fuel system.

Excluded means relating to an engine that either:

(1) Has been determined not to be a nonroad engine, as specified in 40 CFR 1068.30; or

(2) Is a nonroad engine that, according to § 1045.5, is not subject to this part 1045.

Exempted has the meaning given in 40 CFR 1068.30.

Exhaust-gas recirculation (EGR) means a technology that reduces emissions by routing exhaust gases that had been exhausted from the combustion chamber(s) back into the engine to be mixed with incoming air before or during combustion. The use of valve timing to increase the amount of residual exhaust gas in the combustion chamber(s) that is mixed with incoming air before or during combustion is not considered exhaust-gas recirculation for the purposes of this part.

Family emission limit (FEL) means an emission level declared by the manufacturer to serve in place of the emission standards specified in subpart B of this part under the ABT program in subpart H of this part. The family emission limit must be expressed to the same number of decimal places as the emission standard it replaces. The family emission limit serves as the emission standard for the engine family (exhaust) or emission family (evaporative) with respect to all required testing.

Flexible-fuel means relating to an engine designed for operation on any mixture of two or more different fuels.

Fuel line means hose, tubing, and primer bulbs containing or exposed to liquid fuel, including hose or tubing that delivers fuel to or from the engine, as follows:

(1) This includes flexible molded sections for transporting liquid fuel to or from the engine, but does not include inflexible components for connecting hose or tubing.

(2) This includes hose or tubing for the vent line or filler neck if fuel systems are designed such that any portion of the vent-line or filler-neck material continues to be exposed to liquid fuel after completion of a refueling event in which an operator fills the fuel tank using typical methods. For example, we would not consider a filler neck to be a fuel line if an operator stops refueling after an initial automatic shutoff that signals the fuel tank is full, where any liquid fuel in the filler neck during the refueling procedure drains into the fuel tank.

(3) This does not include primer bulbs that contain liquid fuel only for priming the engine before starting.

Fuel system means all components involved in transporting, metering, and mixing the fuel from the fuel tank to the combustion chamber(s), including the fuel tank, fuel tank cap, fuel pump, fuel filters, fuel lines, carburetor or fuel-injection components, and all fuel-system vents. In the case where the fuel tank cap or other components (excluding fuel lines) are directly mounted on the fuel tank, they are considered to be a part of the fuel tank.

Fuel type means a general category of fuels such as gasoline or natural gas. There can be multiple grades within a single fuel type, such as low-temperature or all-season gasoline.

Good engineering judgment has the meaning given in 40 CFR 1068.30. See 40 CFR 1068.5 for the administrative process we use to evaluate good engineering judgment.

High-performance means relating to a sterndrive/inboard engine with maximum engine power above 373 kW that has design features to enhance power output such that the expected operating time until rebuild is substantially shorter than 480 hours.

Hydrocarbon (HC) means the hydrocarbon group on which the emission standards are based for each fuel type, as described in subpart B of this part.

Identification number means a unique specification (for example, a model number/serial number combination) that allows someone to distinguish a particular engine from other similar engines.

Jet boat means a vessel that uses an installed internal combustion engine powering a water jet pump as its primary source of propulsion and is designed with open area for carrying passengers. Jet boat engines qualify as sterndrive/inboard engines.

Low-hour means relating to an engine that has stabilized emissions and represents the undeteriorated emission level. This would generally involve less than 30 hours of operation.

Manufacture means the physical and engineering process of designing, constructing, and assembling an engine or vessel.

Manufacturer has the meaning given in section 216(1) of the Clean Air Act (42 U.S.C. 7550(1)). In general, this term includes any person who manufactures an engine, or vessel for sale in the United States or otherwise introduces a new marine engine into U.S. commerce. This includes importers who import engines or vessels for resale, but not dealers. All manufacturing entities under the control of the same person are considered to be a single manufacturer.

Marine engine means a nonroad engine that is installed or intended to be installed on a vessel. This includes a portable auxiliary marine engine only if its fueling, cooling, or exhaust system is an integral part of the vessel. There are two kinds of marine engines:

(1) *Propulsion marine engine* means a marine engine that moves a vessel through the water or directs the vessel's movement.

(2) *Auxiliary marine engine* means a marine engine not used for propulsion.

Marine vessel has the meaning given in 1 U.S.C. 3, except that it does not include amphibious vehicles. The definition in 1 U.S.C. 3 very broadly includes every craft capable of being used as a means of transportation on water.

Maximum engine power has the meaning given in § 1045.140.

Maximum test speed has one of the following meanings:

(1) For all testing with two-stroke engines and for testing four-stroke engines on an engine dynamometer, *maximum test speed* has the meaning given in 40 CFR 1065.1001 and § 1045.501.

(2) For testing a four-stroke engine that remains installed in a vessel, *maximum test speed* means the engine speed during sustained operation with maximum operator demand.

Model year means one of the following things:

(1) For freshly manufactured vessels and engines (see definition of ''new propulsion marine engine,'' paragraph (1)), model year means one of the following:

(i) Calendar year.

(ii) Your annual new model production period if it is different than the calendar year. This must include January 1 of the calendar year for which the model year is named. It may not begin before January 2 of the previous calendar year and it must end by December 31 of the named calendar year. For seasonal production periods not including January 1, model year means the calendar year in which the production occurs, unless you choose to certify the applicable engine family with the following model year. For example, if your production period is June 1, 2010 through November 30, 2010, your model year would be 2010 unless you choose to certify the engine family for model year 2011.

(2) For an engine that is converted to a propulsion marine engine after being certified and placed into service as a motor vehicle engine, a nonroad engine that is not a propulsion marine engine, or a stationary engine, model year means the calendar year in which the engine was originally produced. For an engine that is converted to a propulsion marine engine after being placed into service as a motor vehicle engine, a nonroad engine that is not a propulsion marine engine, or a stationary engine without having been certified, model year means the calendar year in which the engine becomes a new propulsion marine engine. (*See* definition of ''new propulsion marine engine,'' paragraph (2).)

(3) [Reserved]

(4) For engines that are not freshly manufactured but are installed in new vessels, model year means the calendar year in which the engine is installed in the new vessel (see definition of ''new propulsion marine engine,'' paragraph (4)).

(5) For imported engines:

(i) For imported engines described in paragraph (5)(i) of the definition of

''new propulsion marine engine,'' *model year* has the meaning given in paragraphs (1) through (4) of this definition.

(ii) For imported engines described in paragraph (5)(ii) of the definition of ''new propulsion marine engine,'' *model year* means the calendar year in which the engine is modified.

(iii) For imported engines described in paragraph (5)(iii) of the definition of ''new propulsion marine nonroad engine,'' *model year* means the calendar year in which the engine is first assembled in its imported configuration, unless specified otherwise in this part or in 40 CFR part 1068.

New portable marine fuel tanks and fuel lines means portable marine fuel tanks and fuel lines that have not yet been placed into service, or which are otherwise offered for sales as new products.

New propulsion marine engine or *new engine* means any of the following things:

(1) A freshly manufactured propulsion marine engine for which the ultimate purchaser has never received the equitable or legal title. This kind of engine might commonly be thought of as ''brand new.'' In the case of this paragraph (1), the engine is new from the time it is produced until the ultimate purchaser receives the title or the product is placed into service, whichever comes first.

(2) An engine originally manufactured as a motor vehicle engine, a nonroad engine that is not a propulsion marine engine, or a stationary engine that is later used or intended to be used as a propulsion marine engine. In this case, the engine is no longer a motor vehicle, nonpropulsion, or stationary engine and becomes a ''new propulsion marine engine.'' The engine is no longer new when it is placed into service as a marine propulsion engine. This paragraph (2) applies for engines we exclude under § 1045.5, where that engine is later installed as a propulsion engine in a vessel that is covered by this part 1045.

(3) [Reserved]

(4) An engine not covered by paragraphs (1) through (3) of this definition that is intended to be installed in a new vessel. This generally includes installation of used engines in new vessels. The engine is no longer new when the ultimate purchaser receives a title for the vessel or the product is placed into service, whichever comes first.

(5) An imported marine engine, subject to the following provisions:

(i) An imported marine engine covered by a certificate of conformity issued under this part that meets the criteria of one or more of paragraphs (1) through (4) of this definition, where the original engine manufacturer holds the certificate, is new as defined by those applicable paragraphs.

(ii) An imported engine that will be covered by a certificate of conformity issued under this part, where someone other than the original engine manufacturer holds the certificate (such as when the engine is modified after its initial assembly), is a new propulsion marine engine when it is imported. It is no longer new when the ultimate purchaser receives a title for the engine or it is placed into service, whichever comes first.

(iii) An imported propulsion marine engine that is not covered by a certificate of conformity issued under this part at the time of importation is new. This addresses uncertified engines and vessels initially placed into service that someone seeks to import into the United States. Importation of this kind of engine (or vessel containing such an engine) is generally prohibited by 40 CFR part 1068. However, the importation of such an engine is not prohibited if the engine has an earlier model year than that identified in the following table, since it is not subject to standards:

APPLICABILITY OF EMISSION STANDARDS FOR PROPULSION MARINE ENGINES

Engine type	Initial model year of emission standards
Outboard	1998
Personal watercraft	1999
Sterndrive/inboard	2010

New vessel means either of the following things:

(1) A vessel for which the ultimate purchaser has never received the equitable or legal title. The product is no longer new when the ultimate purchaser receives this title or it is placed into service, whichever comes first.

(2) An imported vessel that has already been placed into service, where it has an engine not covered by a certificate of conformity issued under this part at the time of importation that was manufactured after the requirements of this part start to apply (see § 1045.1).

Noncompliant engine means an engine that was originally covered by a certificate of conformity but is not in the certified configuration or otherwise does not comply with the conditions of the certificate.

Nonconforming engine means an engine not covered by a certificate of conformity that would otherwise be subject to emission standards.

Nonmethane hydrocarbon has the meaning given in 40 CFR 1065.1001. This generally means the difference between the emitted mass of total hydrocarbons and the emitted mass of methane.

Nonroad means relating to nonroad engines, or vessels, or equipment that include nonroad engines.

Nonroad engine has the meaning given in 40 CFR 1068.30. In general, this means all internal-combustion engines except motor vehicle engines, stationary engines, engines used solely for competition, or engines used in aircraft.

Official emission result means the measured emission rate for an emission-data engine on a given duty cycle before the application of any deterioration factor.

Outboard engine means an assembly of a spark-ignition engine and drive unit used to propel a vessel from a properly mounted position external to the hull of the vessel. An outboard drive unit is partially submerged during operation and can be tilted out of the water when not in use.

Owners manual means a document or collection of documents prepared by the engine manufacturer for the owner or operator to describe appropriate engine maintenance, applicable warranties, and any other information related to operating or keeping the engine. The owners manual is typically provided to the ultimate purchaser at the time of sale. The owners manual may be in paper or electronic format.

Oxides of nitrogen has the meaning given in 40 CFR part 1065.1001.

Personal watercraft means a vessel less than 4.0 meters (13 feet) in length that uses an installed spark-ignition engine powering a water jet pump as its primary source of propulsion and is designed with no open load carrying area that would retain water. The vessel is designed to be operated by a person or persons positioned on, rather than within the confines of the hull. A vessel using an outboard engine as its primary source of propulsion is not a personal watercraft.

Personal watercraft engine means a spark-ignition engine used to propel a personal watercraft.

Placed into service means put into initial use for its intended purpose.

Point of first retail sale means the location at which the initial retail sale occurs. This generally means an equipment dealership, but may also include an engine seller or distributor in cases where loose engines are sold to the general public for uses such as replacement engines.

Portable marine fuel tank has the meaning given in 40 CFR 1060.801.

Ramped-modal means relating to the ramped-modal type of steady-state test described in § 1045.505.

Revoke has the meaning given in 40 CFR 1068.30. In general this means to terminate the certificate or an exemption for an engine family.

Round has the meaning given in 40 CFR 1065.1001.

Scheduled maintenance means adjusting, repairing, removing, disassembling, cleaning, or replacing components or systems periodically to keep a part or system from failing, malfunctioning, or wearing prematurely. It also may mean actions you expect are necessary to correct an overt indication of failure or malfunction for which periodic maintenance is not appropriate.

Small-volume engine manufacturer means an engine manufacturer with 250 or fewer employees. This includes any employees working for a parent company and all its subsidiaries.

Small-volume vessel manufacturer means a vessel manufacturer with 500 or fewer employees. This includes any employees working for a parent company and all its subsidiaries.

Spark-ignition means relating to a gasoline-fueled engine or any other type of engine with a spark plug (or other sparking device) and with operating characteristics significantly similar to the theoretical Otto combustion cycle. Spark-ignition engines usually use a throttle to regulate intake air flow to control power during normal operation.

Steady-state means relating to emission tests in which engine speed and load are held at a finite set of essentially constant values. Steady-state tests are either discrete-mode tests or ramped-modal tests.

Sterndrive/inboard engine means a spark-ignition engine that is used to propel a vessel, but is not an outboard engine or a personal watercraft engine. A sterndrive/inboard engine may be either a conventional sterndrive/inboard engine or a high-performance engine. Engines on propeller-driven vessels, jet boats, air boats, and hovercraft are all sterndrive/inboard engines.

Stoichiometric means relating to the particular ratio of air and fuel such that if the fuel were fully oxidized, there would be no remaining fuel or oxygen. For example, stoichiometric combustion in a gasoline-fueled engine typically occurs at an air-to-fuel mass ratio of about 14.7:1.

Suspend has the meaning given in 40 CFR 1068.30. In general this means to temporarily discontinue the certificate or an exemption for an engine family.

Test engine means an engine in a test sample.

Test sample means the collection of engines selected from the population of an engine family for emission testing. This may include testing for certification, production-line testing, or in-use testing.

Total hydrocarbon has the meaning given in 40 CFR 1065.1001. This generally means the combined mass of organic compounds measured by the specified procedure for measuring total hydrocarbon, expressed as a hydrocarbon with a hydrogen-to-carbon mass ratio of 1.85:1.

Total hydrocarbon equivalent has the meaning given in 40 CFR 1065.1001. This generally means the sum of the carbon mass contributions of non-oxygenated hydrocarbons, alcohols and aldehydes, or other organic compounds that are measured separately as contained in a gas sample, expressed as exhaust hydrocarbon from petroleum-fueled engines. The hydrogen-to-carbon ratio of the equivalent hydrocarbon is 1.85:1.

Ultimate purchaser means, with respect to any new vessel or new marine propulsion engine, the first person who in good faith purchases such new vessel or new engine for purposes other than resale.

Under-cowl fuel line means a fuel line that is entirely contained within the cowl of an outboard engine. This does not include a fuel line that crosses through the cowl housing.

United States has the meaning given in 40 CFR 1068.30.

Upcoming model year for an engine family means the model year after the one currently in production.

U.S.-directed production volume means the number of engine units, subject to the requirements of this part, produced by a manufacturer for which the manufacturer has a reasonable assurance that sale was or will be made to ultimate purchasers in the United States.

Useful life means the period during which a vehicle is required to comply with all applicable emission standards, specified as a given number of hours of operation or calendar years, whichever comes first. It is the period during which an engine is required to comply with all applicable emission standards. See §§ 1045.103(e), 1045.105(e), and 1045.112. If an engine has no hour meter, the specified number of hours does not limit the period during which an in-use engine is required to comply with emission standards unless the degree of service accumulation can be verified separately.

Variable-speed engine means an engine that is not a constant-speed engine.

Vessel means marine vessel.

Void has the meaning given in 40 CFR 1068.30. In general this means to invalidate a certificate or an exemption both retroactively and prospectively.

Volatile liquid fuel means any fuel other than diesel or biodiesel that is a liquid at atmospheric pressure and has a Reid Vapor Pressure higher than 2.0 pounds per square inch.

We (us, our) means the Administrator of the Environmental Protection Agency and any authorized representatives.

Wide-open throttle means maximum throttle opening. Unless this is specified at a given speed, it refers to maximum throttle opening at maximum speed. For electronically controlled or other engines with multiple possible fueling rates, wide-open throttle also means the maximum fueling rate at maximum throttle opening under test conditions.

[73 FR 59194, Oct. 8, 2008, as amended at 75 FR 23020, Apr. 30, 2010]

§ 1045.805 What symbols, acronyms, and abbreviations does this part use?

The following symbols, acronyms, and abbreviations apply to this part:

ABT Averaging, banking, and trading.
AECD Auxiliary emission control device.
CFR Code of Federal Regulations.
CH_4 methane.
CO carbon monoxide.
CO_2 carbon dioxide.
EPA Environmental Protection Agency.
FEL Family Emission Limit.
g gram.
HC hydrocarbon.
hr hour.
kPa kilopascals.
kW kilowatt.
m meter.
N_2O nitrous oxide.
NARA National Archives and Records Administration.
NMHC nonmethane hydrocarbons.
NO_X oxides of nitrogen (NO and NO_2).
NTE not-to-exceed
psig pounds per square inch of gauge pressure.
RPM revolutions per minute.
SAE Society of Automotive Engineers.
THC total hydrocarbon.
THCE total hydrocarbon equivalent.
U.S.C. United States Code.

§ 1045.810 What materials does this part reference?

Documents listed in this section have been incorporated by reference into this part. The Director of the Federal Register approved the incorporation by reference as prescribed in 5 U.S.C. 552(a) and 1 CFR part 51. Anyone may inspect copies at the U.S. EPA, Air and Radiation Docket and Information Center, 1301 Constitution Ave., NW., Room B102, EPA West Building, Washington, DC 20460 or at the National Archives and Records Administration (NARA). For information on the availability of this material at NARA, call 202–741–6030, or go to: *http://www.archives.gov/federal_register/code_of_federal_regulations/ibr_locations.html*.

(a) *SAE material*. Table 1 to this section lists material from the Society of Automotive Engineers that we have incorporated by reference. The first column lists the number and name of the material. The second column lists the sections of this part where we reference it. Anyone may purchase copies of these materials from the Society of Automotive Engineers, 400 Commonwealth Drive, Warrendale, PA 15096 or *http://www.sae.org*. Table 1 follows:

TABLE 1 TO § 1045.810—SAE MATERIALS

Document number and name	Part 1045 reference
SAE J1939–05, Marine Stern Drive and Inboard Spark-Ignition Engine On-Board Diagnostics Implementation Guide, February 2008	1045.110

(b) [Reserved]

§ 1045.815 What provisions apply to confidential information?

(a) Clearly show what you consider confidential by marking, circling, bracketing, stamping, or some other method.

(b) We will store your confidential information as described in 40 CFR part 2. Also, we will disclose it only as specified in 40 CFR part 2. This applies both to any information you send us and to any information we collect from inspections, audits, or other site visits.

(c) If you send us a second copy without the confidential information, we will assume it contains nothing confidential whenever we need to release information from it.

(d) If you send us information without claiming it is confidential, we may make it available to the public without further notice to you, as described in 40 CFR 2.204.

§ 1045.820 How do I request a hearing?

(a) You may request a hearing under certain circumstances as described elsewhere in this part. To do this, you must file a written request, including a description of your objection and any supporting data, within 30 days after we make a decision.

(b) For a hearing you request under the provisions of this part, we will approve your request if we find that your request raises a substantial factual issue.

(c) If we agree to hold a hearing, we will use the procedures specified in 40 CFR part 1068, subpart G.

§ 1045.825 What reporting and recordkeeping requirements apply under this part?

Under the Paperwork Reduction Act (44 U.S.C. 3501 *et seq.*), the Office of Management and Budget approves the reporting and recordkeeping specified in the applicable regulations. The following items illustrate the kind of reporting and recordkeeping we require for engines and vessels regulated under this part:

(a) We specify the following requirements related to engine and vessel certification in this part 1045:

(1) In § 1045.20 we require vessel manufacturers to label their vessels if they are relying on component certification.

(2) In § 1045.135 we require engine manufacturers to keep certain records related to duplicate labels sent to vessel manufacturers.

(3) In § 1045.145 we include various reporting and recordkeeping requirements related to interim provisions.

(4) In subpart C of this part we identify a wide range of information required to certify engines.

(5) In §§ 1045.345 and 1045.350 we specify certain records related to production-line testing.

(6) In §§ 1045.420 and 1045.425 we specify certain records related to in-use testing.

(7) In subpart G of this part we identify several reporting and recordkeeping items for making demonstrations and getting approval related to various special compliance provisions.

(8) In §§ 1045.725, 1045.730, and 1045.735 we specify certain records related to averaging, banking, and trading.

(b) We specify the following requirements related to vessel or component certification in 40 CFR part 1060:

(1) In 40 CFR 1060.20 we give an overview of principles for reporting information.

(2) In 40 CFR part 1060, subpart C, we identify a wide range of information required to certify products.

(3) In 40 CFR 1060.301 we require manufacturers to make engines or vessels available for our testing if we make such a request.

(4) In 40 CFR 1060.505 we specify information needs for establishing various changes to published test procedures.

(c) We specify the following requirements related to testing in 40 CFR part 1065:

(1) In 40 CFR 1065.2 we give an overview of principles for reporting information.

(2) In 40 CFR 1065.10 and 1065.12 we specify information needs for establishing various changes to published test procedures.

(3) In 40 CFR 1065.25 we establish basic guidelines for storing test information.

(4) In 40 CFR 1065.695 we identify data that may be appropriate for collecting during testing of in-use engines using portable analyzers.

(d) We specify the following requirements related to the general compliance provisions in 40 CFR part 1068:

(1) In 40 CFR 1068.5 we establish a process for evaluating good engineering judgment related to testing and certification.

(2) In 40 CFR 1068.25 we describe general provisions related to sending and keeping information.

(3) In 40 CFR 1068.27 we require manufacturers to make engines available for our testing or inspection if we make such a request.

(4) In 40 CFR 1068.105 we require vessel manufacturers to keep certain records related to duplicate labels from engine manufacturers.

(5) In 40 CFR 1068.120 we specify recordkeeping related to rebuilding engines.

(6) In 40 CFR part 1068, subpart C, we identify several reporting and recordkeeping items for making demonstrations and getting approval related to various exemptions.

(7) In 40 CFR part 1068, subpart D, we identify several reporting and recordkeeping items for making demonstrations and getting approval related to importing engines.

(8) In 40 CFR 1068.450 and 1068.455 we specify certain records related to testing production-line engines in a selective enforcement audit.

(9) In 40 CFR 1068.501 we specify certain records related to investigating and reporting emission-related defects.

(10) In 40 CFR 1068.525 and 1068.530 we specify certain records related to recalling nonconforming engines.

APPENDIX I TO PART 1045—SUMMARY OF PREVIOUS EMISSION STANDARDS

(a) The following standards apply to outboard and personal watercraft engines produced before the model years specified in §1045.1 (since the end of the phase-in period specified in 40 CFR 91.104):

(1) For engines at or below 4.3 kW, the $HC+NO_X$ standard is 81.00 g/kW-hr.

(2) For engines above 4.3 kW, the following $HC+NO_X$ standard applies:

$$STD = 6.00 + 0.250 \cdot (151 + 557/P^{0.9})$$

Where:

STD = The $HC+NO_X$ emission standard, in g/kW-hr.

P = The average power of an engine family, in kW.

(b) See 40 CFR 91.104 for standards that applied to outboard and personal watercraft engines during the phase-in period.

APPENDIX II TO PART 1045—DUTY CYCLES FOR PROPULSION MARINE ENGINES

(a) The following duty cycle applies for discrete-mode testing:

E4 Mode No.	Engine speed [1]	Torque (percent) [2]	Weighting factors
1	Maximum test speed	100	0.06
2	80%	71.6	0.14
3	60%	46.5	0.15
4	40%	25.3	0.25
5	Warm idle	0	0.40

[1] Speed terms are defined in 40 CFR part 1065. Percent speed values are relative to maximum test speed.
[2] Except as noted in §1045.505, the percent torque is relative to maximum torque at maximum test speed.

(b) The following duty cycle applies for ramped-modal testing:

RMC Mode	Time in mode (seconds)	Engine speed [1,2]	Torque (percent) [2,3]
1a Steady-state	225	Idle	0
1b Transition	20	Linear transition	Linear transition
2a Steady-state	63	Maximum test speed	100
2b Transition	20	Linear transition	Linear transition
*3a Steady-state	271	40%	25.3%
3b Transition	20	Linear transition	Linear transition
4a Steady-state	151	80%	71.6%
4b Transition	20	Linear transition	Linear transition
5a Steady-state	161	60%	46.5%
5b Transition	20	Linear transition	Linear transition
6 Steady-state	229	Warm idle	0

[1] Speed terms are defined in 40 CFR part 1065. Percent speed values are relative to maximum test speed.
[2] Advance from one mode to the next within a 20-second transition phase. During the transition phase, command linear progressions of speed and torque from the speed setting and torque setting of the current mode to the speed setting and torque setting of the next mode.
[3] Except as noted in §1045.505, the percent torque is relative to maximum torque at maximum test speed.

PART 1048—CONTROL OF EMISSIONS FROM NEW, LARGE NONROAD SPARK-IGNITION ENGINES

Subpart A—Overview and Applicability

Sec.
1048.1 Does this part apply to me?
1048.2 Who is responsible for compliance?
1048.5 Which engines are excluded from this part's requirements?
1048.10 How is this part organized?
1048.15 Do any other regulation parts apply to me?
1048.20 What requirements from this part apply to excluded stationary engines?
1048.30 Submission of information.

Subpart B—Emission Standards and Related Requirements

1048.101 What exhaust emission standards must my engines meet?
1048.105 What evaporative emissions standards and requirements apply?
1048.110 How must my engines diagnose malfunctions?
1048.115 What other requirements apply?
1048.120 What warranty requirements apply to me?
1048.125 What maintenance instructions must I give to buyers?
1048.130 What installation instructions must I give to equipment manufacturers?
1048.135 How must I label and identify the engines I produce?
1048.140 What are the provisions for certifying Blue Sky Series engines?
1048.145 Are there interim provisions that apply only for a limited time?

Subpart C—Certifying Engine Families

1048.201 What are the general requirements for obtaining a certificate of conformity?
1048.205 What must I include in my application?
1048.210 May I get preliminary approval before I complete my application?
1048.220 How do I amend the maintenance instructions in my application?
1048.225 How do I amend my application for certification to include new or modified engine configurations?
1048.230 How do I select engine families?
1048.235 What emission testing must I perform for my application for a certificate of conformity?
1048.240 How do I demonstrate that my engine family complies with exhaust emission standards?
1048.245 How do I demonstrate that my engine family complies with evaporative emission standards?
1048.250 What records must I keep and make available to EPA?
1048.255 What decisions may EPA make regarding my certificate of conformity?

Subpart D—Testing Production-line Engines

1048.301 When must I test my production-line engines?
1048.305 How must I prepare and test my production-line engines?
1048.310 How must I select engines for production-line testing?
1048.315 How do I know when my engine family fails the production-line testing requirements?
1048.320 What happens if one of my production-line engines fails to meet emission standards?
1048.325 What happens if an engine family fails the production-line testing requirements?
1048.330 May I sell engines from an engine family with a suspended certificate of conformity?
1048.335 How do I ask EPA to reinstate my suspended certificate?
1048.340 When may EPA revoke my certificate under this subpart and how may I sell these engines again?
1048.345 What production-line testing records must I send to EPA?
1048.350 What records must I keep?

Subpart E—Testing In-use Engines

1048.401 What testing requirements apply to my engines that have gone into service?
1048.405 How does this program work?
1048.410 How must I select, prepare, and test my in-use engines?
1048.415 What happens if in-use engines do not meet requirements?
1048.420 What in-use testing information must I report to EPA?
1048.425 What records must I keep?

Subpart F—Test Procedures

1048.501 How do I run a valid emission test?
1048.505 How do I test engines using steady-state duty cycles, including ramped-modal testing?
1048.510 What transient duty cycles apply for laboratory testing?
1048.515 What are the field-testing procedures?

Subpart G—Compliance Provisions

1048.601 What compliance provisions apply to these engines?
1048.605 What provisions apply to engines certified under the motor vehicle program?
1048.610 What provisions apply to vehicles certified under the motor vehicle program?

1048.612 What is the exemption for delegated final assembly?
1048.615 What are the provisions for exempting engines designed for lawn and garden applications?
1048.620 What are the provisions for exempting large engines fueled by natural gas or liquefied petroleum gas?
1048.625 What special provisions apply to engines using noncommercial fuels?
1048.630 What are the provisions for exempting engines used solely for competition?
1048.635 What special provisions apply to branded engines?
1048.640 What special provisions apply for small-volume engine manufacturers?

Subpart H [Reserved]

Subpart I—Definitions and Other Reference Information

1048.801 What definitions apply to this part?
1048.805 What symbols, acronyms, and abbreviations does this part use?
1048.810 What materials does this part reference?
1048.815 What provisions apply to confidential information?
1048.820 How do I request a hearing?
1048.825 What reporting and recordkeeping requirements apply under this part?
APPENDIX I TO PART 1048 [RESERVED]
APPENDIX II TO PART 1048—LARGE SPARK-IGNITION (SI) COMPOSITE TRANSIENT CYCLE

AUTHORITY: 42 U.S.C. 7401–7671q.

SOURCE: 67 FR 68347, Nov. 8, 2002, unless otherwise noted.

Subpart A—Overview and Applicability

§ 1048.1 Does this part apply to me?

(a) The regulations in this part 1048 apply for all new, spark-ignition nonroad engines (defined in § 1048.801) with maximum engine power above 19 kW, except as provided in § 1048.5.

(b) This part 1048 applies for engines built on or after January 1, 2004. You need not follow this part for engines you produce before January 1, 2004. *See* §§ 1048.101 through 1048.115, § 1048.145, and the definition of model year in § 1048.801 for more information about the timing of new requirements.

(c) The definition of nonroad engine in 40 CFR 1068.30 excludes certain engines used in stationary applications. These engines may be required by 40 CFR part 60, subpart JJJJ, to comply with some of the provisions of this part 1048; otherwise, these engines are only required to comply with the requirements in § 1048.20. In addition, the prohibitions in 40 CFR 1068.101 restrict the use of stationary engines for nonstationary purposes unless they are certified under this part 1048 to the same standards that would apply to nonroad engines for the same model year.

(d) In certain cases, the regulations in this part 1048 apply to engines with maximum engine power at or below 19 kW that would otherwise be covered by 40 CFR part 90 or 1054. See 40 CFR 90.913 or 1054.615 for provisions related to this allowance.

[70 FR 40465, July 13, 2005, as amended at 73 FR 3613, Jan. 18, 2008; 73 FR 59231, Oct. 8, 2008]

§ 1048.2 Who is responsible for compliance?

The regulations in this part 1048 contain provisions that affect both engine manufacturers and others. However, the requirements of this part are generally addressed to the engine manufacturer. The term ''you'' generally means the engine manufacturer, as defined in § 1048.801, especially for issues related to certification (including production-line testing, reporting, etc.).

[73 FR 59231, Oct. 8, 2008]

§ 1048.5 Which engines are excluded from this part's requirements?

This part does not apply to the following nonroad engines:

(a) Engines that are certified to meet the requirements of 40 CFR part 1051, or are otherwise subject to 40 CFR part 1051 (for example, engines used in snowmobiles and all-terrain vehicles).

(b) Propulsion marine engines. See 40 CFR parts 91 and 1045. This part applies with respect to auxiliary marine engines.

(c) Engines that are certified to meet the requirements of 40 CFR parts 92 or 1033 (locomotive engines), or are otherwise subject to 40 CFR parts 92 or 1033.

[70 FR 40465, July 13, 2005, as amended at 73 FR 59232, Oct. 8, 2008]

§ 1048.10 How is this part organized?

This part 1048 is divided into the following subparts:

(a) Subpart A of this part defines the applicability of part 1048 and gives an overview of regulatory requirements.

(b) Subpart B of this part describes the emission standards and other requirements that must be met to certify engines under this part. Note that § 1048.145 discusses certain interim requirements and compliance provisions that apply only for a limited time.

(c) Subpart C of this part describes how to apply for a certificate of conformity.

(d) Subpart D of this part describes general provisions for testing production-line engines.

(e) Subpart E of this part describes general provisions for testing in-use engines.

(f) Subpart F of this part describes how to test your engines (including references to other parts of the Code of Federal Regulations).

(g) Subpart G of this part and 40 CFR part 1068 describe requirements, prohibitions, and other provisions that apply to engine manufacturers, equipment manufacturers, owners, operators, rebuilders, and all others.

(h) [Reserved]

(i) Subpart I of this part contains definitions and other reference information.

[70 FR 40465, July 13, 2005, as amended at 73 FR 59232, Oct. 8, 2008]

§ 1048.15 Do any other regulation parts apply to me?

(a) Part 1060 of this chapter describes standards and procedures for controlling evaporative emissions from engines fueled by gasoline or other volatile liquid fuels and the associated fuel systems. These requirements apply to engine manufacturers as specified in this part 1048. Part 1060 applies optionally for equipment manufacturers and fuel-system component manufacturers for certifying their products.

(b) Part 1065 of this chapter describes procedures and equipment specifications for testing engines to measure exhaust emissions. Subpart F of this part 1048 describes how to apply the provisions of part 1065 of this chapter to determine whether engines meet the exhaust emission standards in this part.

(c) The requirements and prohibitions of part 1068 of this chapter apply to everyone, including anyone who manufactures, imports, installs, owns, operates, or rebuilds any of the engines subject to this part 1048, or equipment containing these engines. Part 1068 of this chapter describes general provisions, including these seven areas:

(1) Prohibited acts and penalties for engine manufacturers, equipment manufacturers, and others.

(2) Rebuilding and other aftermarket changes.

(3) Exclusions and exemptions for certain engines.

(4) Importing engines.

(5) Selective enforcement audits of your production.

(6) Defect reporting and recall.

(7) Procedures for hearings.

(d) Other parts of this chapter apply if referenced in this part.

[70 FR 40465, July 13, 2005, as amended at 73 FR 59232, Oct. 8, 2008; 74 FR 8426, Feb. 24, 2009; 75 FR 23021, Apr. 30, 2010]

§ 1048.20 What requirements from this part apply to excluded stationary engines?

(a) You must add a permanent label or tag to each new engine you produce or import that is excluded under § 1048.1(c) as a stationary engine and is not required by 40 CFR part 60, subpart JJJJ, to meet the standards and other requirements of this part 1048 that are equivalent to the requirements applicable to nonroad SI engines for the same model year. To meet labeling requirements, you must do the following things:

(1) Attach the label or tag in one piece so no one can remove it without destroying or defacing it.

(2) Secure it to a part of the engine needed for normal operation and not normally requiring replacement.

(3) Make sure it is durable and readable for the engine's entire life.

(4) Write it in English.

(5) Follow the requirements in § 1048.135(g) regarding duplicate labels if the engine label is obscured in the final installation.

(b) Engine labels or tags required under this section must have the following information:

(1) Include the heading ''EMISSION CONTROL INFORMATION''.

(2) Include your full corporate name and trademark. You may instead include the full corporate name and trademark of another company you choose to designate.

(3) State the engine displacement (in liters) and maximum engine power.

(4) State: ''THIS ENGINE IS EXCLUDED FROM THE REQUIREMENTS OF 40 CFR PART 1048 AS A ''STATIONARY ENGINE'' AND THE OWNER/OPERATOR MUST COMPLY WITH THE REQUIREMENTS OF 40 CFR PART 60. INSTALLING OR USING THIS ENGINE IN ANY OTHER APPLICATION MAY BE A VIOLATION OF FEDERAL LAW SUBJECT TO CIVIL PENALTY.''.

(c) Stationary engines required by 40 CFR part 60, subpart JJJJ, to meet the requirements of this part 1048 must meet the labeling requirements of 40 CFR 60.4242.

[70 FR 40466, July 13, 2005, as amended at 73 FR 3613, Jan. 18, 2008]

§ 1048.30 Submission of information.

(a) This part includes various requirements to record data or other information. Refer to § 1048.825 and 40 CFR 1068.25 regarding recordkeeping requirements. Unless we specify otherwise, store these records in any format and on any media and keep them readily available for one year after you send an associated application for certification, or one year after you generate the data if they do not support an application for certification. You must promptly send us organized, written records in English if we ask for them. We may review them at any time.

(b) The regulations in § 1048.255 and 40 CFR 1068.101 describe your obligation to report truthful and complete information and the consequences of failing to meet this obligation. This includes information not related to certification.

(c) Send all reports and requests for approval to the Designated Compliance Officer (*see* § 1048.801).

(d) Any written information we require you to send to or receive from another company is deemed to be a required record under this section. Such records are also deemed to be submissions to EPA. We may require you to send us these records whether or not you are a certificate holder.

[75 FR 23021, Apr. 30, 2010]

Subpart B—Emission Standards and Related Requirements

§ 1048.101 What exhaust emission standards must my engines meet?

The exhaust emission standards of this section apply by model year. You may certify engines earlier than we require. The Tier 1 standards apply only to steady-state testing, as described in paragraph (b) of this section. The Tier 2 standards apply to steady-state, transient, and field testing, as described in paragraphs (a), (b), and (c) of this section.

(a) *Emission standards for transient testing*. Starting in the 2007 model year, transient exhaust emissions from your engines may not exceed the Tier 2 emission standards, as follows:

(1) Measure emissions using the applicable transient test procedures described in subpart F of this part.

(2) The Tier 2 $HC+NO_X$ standard is 2.7 g/kW-hr and the Tier 2 CO standard is 4.4 g/kW-hr. For severe-duty engines, the Tier 2 $HC+NO_X$ standard is 2.7 g/kW-hr and the Tier 2 CO standard is 130.0 g/kW-hr. The following engines are not subject to the transient standards in this paragraph (a):

(i) High-load engines.

(ii) Engines with maximum engine power above 560 kW.

(iii) Engines with maximum test speed above 3400 rpm.

(iv) Constant-speed engines and severe-duty engines.

(3) You may optionally certify your engines according to the following formula instead of the standards in paragraph (a)(1) of this section: $(HC+NO_X) \times CO^{0.784} \leq 8.57$. The $HC+NO_X$ and CO emission levels you select to satisfy this formula, rounded to the nearest 0.1 g/kW-hr, become the emission standards that apply for those engines. You may not select an $HC+NO_X$ emission standard higher than 2.7 g/kW-hr or a CO emission standard higher than 20.6 g/kW-hr. The following table illustrates a range of possible values under this paragraph (a)(3):

TABLE 1 OF § 1048.101—EXAMPLES OF POSSIBLE TIER 2 DUTY-CYCLE EMISSION STANDARDS

$HC+NO_X$ (g/kW-hr)	CO (g/kW-hr)
2.7	4.4
2.2	5.6
1.7	7.9
1.3	11.1
1.0	15.5
0.8	20.6

(b) *Standards for steady-state testing.* Except as we allow in paragraph (d) of this section, steady-state exhaust emissions from your engines may not exceed emission standards, as follows:

(1) Measure emissions using the applicable steady-state test procedures described in subpart F of this part:

(2) The following table shows the Tier 1 exhaust emission standards that apply to engines from 2004 through 2006 model years:

TABLE 2 OF § 1048.101—TIER 1 EMISSION STANDARDS (G/KW–HR)

Testing	General emission standards		Alternate emission standards for severe-duty engines	
	$HC+NO_X$	CO	$HC+NO_X$	CO
Certification and production-line testing	4.0	50.0	4.0	130.0
In-use testing	5.4	50.0	5.4	130.0

(3) Starting in the 2007 model year, steady-state exhaust emissions from your engines may not exceed the numerical emission standards in paragraph (a) of this section. See paragraph (d) of this section for alternate standards that apply for certain engines.

(c) *Standards for field testing.* Starting in 2007, exhaust emissions may not exceed field-testing standards, as follows:

(1) Measure emissions using the field-testing procedures in subpart F of this part:

(2) The $HC+NO_X$ standard is 3.8 g/kW-hr and the CO standard is 6.5 g/kW-hr. For severe-duty engines, the $HC+NO_X$ standard is 3.8 g/kW-hr and the CO standard is 200.0 g/kW-hr. For natural gas-fueled engines, you are not required to measure nonmethane hydrocarbon emissions or total hydrocarbon emissions for testing to show that the engine meets the emission standards of this paragraph (c); that is, you may assume HC emissions are equal to zero.

(3) You may apply the following formula to determine alternate emission standards that apply to your engines instead of the standards in paragraph (c)(1) of this section: $(HC+NO_X) \times CO^{0.791} \leq 16.78$. $HC+NO_X$ emission levels may not exceed 3.8 g/kW-hr and CO emission levels may not exceed 31.0 g/kW-hr. The following table illustrates a range of possible values under this paragraph (c)(2):

TABLE 3 OF § 1048.101—EXAMPLES OF POSSIBLE TIER 2 FIELD-TESTING EMISSION STANDARDS

$HC+NO_X$ (g/kW-hr)	CO (g/kW-hr)
3.8	6.5
3.1	8.5
2.4	11.7
1.8	16.8
1.4	23.1
1.1	31.0

(d) *Engine protection.* For engines that require enrichment at high loads to protect the engine, you may ask to meet alternate Tier 2 standards of 2.7 g/kW-hr for $HC+NO_X$ and 31.0 g/kW-hr for CO instead of the emission standards described in paragraph (b)(2) of this section for steady-state testing. If we approve your request, you must still meet the transient testing standards in paragraph (a) of this section and the field-testing standards in paragraph (c) of this section. To qualify for this allowance, you must do all the following things:

(1) Show that enrichment is necessary to protect the engine from damage.

(2) Show that you limit enrichment to operating modes that require additional cooling to protect the engine from damage.

(3) Show in your application for certification that enrichment will rarely occur in use in the equipment in which

your engines are installed. For example, an engine that is expected to operate 5 percent of the time in use with enrichment would clearly not qualify.

(4) Include in your installation instructions any steps necessary for someone installing your engines to prevent enrichment during normal operation (see § 1048.130).

(e) *Fuel types*. The exhaust emission standards in this section apply for engines using each type of fuel specified in 40 CFR part 1065, subpart H, on which the engines in the engine family are designed to operate, except for engines certified under § 1048.625. For engines certified under § 1048.625, the standards of this section apply to emissions measured using the specified test fuel. You must meet the numerical emission standards for hydrocarbons in this section based on the following types of hydrocarbon emissions for engines powered by the following fuels:

(1) Natural gas-fueled engines: NMHC emissions.

(2) Alcohol-fueled engines: THCE emissions.

(3) Other engines: THC emissions.

(f) *Small engines*. Certain engines with total displacement at or below 1000 cc may comply with the requirements of 40 CFR part 90 or 1054 instead of complying with the requirements of this part, as described in § 1048.615.

(g) *Useful life*. Your engines must meet the exhaust emission standards in paragraphs (a) through (c) of this section over their full useful life. For severe-duty engines, the minimum useful life is 1,500 hours of operation or seven years, whichever comes first. For all other engines, the minimum useful life is 5,000 hours of operation or seven years, whichever comes first.

(1) Specify a longer useful life in hours for an engine family under either of two conditions:

(i) If you design, advertise, or market your engine to operate longer than the minimum useful life (your recommended hours until rebuild may indicate a longer design life).

(ii) If your basic mechanical warranty is longer than the minimum useful life.

(2) You may request in your application for certification that we approve a shorter useful life for an engine family. We may approve a shorter useful life, in hours of engine operation but not in years, if we determine that these engines will rarely operate longer than the shorter useful life. If engines identical to those in the engine family have already been produced and are in use, your demonstration must include documentation from such in-use engines. In other cases, your demonstration must include an engineering analysis of information equivalent to such in-use data, such as data from research engines or similar engine models that are already in production. Your demonstration must also include any overhaul interval that you recommend, any mechanical warranty that you offer for the engine or its components, and any relevant customer design specifications. Your demonstration may include any other relevant information. The useful life value may not be shorter than any of the following:

(i) 1,000 hours of operation.

(ii) Your recommended overhaul interval.

(iii) Your mechanical warranty for the engine.

(h) *Applicability for testing*. The duty-cycle emission standards in this subpart apply to all testing performed according to the procedures in §§ 1048.505 and 1048.510, including certification, production-line, and in-use testing. The field-testing standards apply for all testing performed according to the procedures of subpart F of this part.

[67 FR 68347, Nov. 8, 2002, as amended at 70 FR 40466, July 13, 2005; 73 FR 3613, Jan 18, 2008; 73 FR 59232, Oct. 8, 2008]

§ 1048.105 What evaporative emission standards and requirements apply?

Starting in the 2007 model year, new engines that run on a volatile liquid fuel (such as gasoline) must meet the emission standards of this section over a useful life of five years, except as specified in paragraph (f) of this section. Note that § 1048.245 allows you to use design-based certification instead of generating new emission data.

(a) *Fuel line permeation*. For nonmetallic fuel lines, you must specify and use products that meet the Category 1 specifications for permeation in SAE J2260 (incorporated by reference in § 1048.810).

(b) [Reserved]

(c) *Diurnal emissions.* Evaporative hydrocarbon emissions may not exceed 0.2 grams per gallon of fuel tank capacity when measured using the test procedures specified in § 1048.501. Diurnal emission controls must continue to function during engine operation.

(d) *Running loss.* Liquid fuel in the fuel tank may not reach boiling during continuous engine operation in the final installation at an ambient temperature of 30 °C. Note that gasoline with a Reid vapor pressure of 62 kPa (9 psi) begins to boil at about 53 °C at atmospheric pressure, and at about 60 °C for fuel tanks that hold pressure as described in § 1048.245(e)(1)(i).

(e) *Installation.* If other companies install your engines in their equipment, you may introduce your engines into U.S. commerce without meeting all the requirements in this section. However, you must give equipment manufacturers any appropriate instructions so that fully assembled equipment will meet all the requirements in this section, as described in § 1048.130. Your instructions may specify that equipment manufacturers may alternatively use other fuel-system components that have been certified under 40 CFR part 1060. Introducing equipment into U.S. commerce without meeting all the requirements of this section violates 40 CFR 1068.101(a)(1).

(f) *Motor vehicles and marine vessels.* Motor vehicles and marine vessels may contain engines subject to the exhaust emission standards in this part 1048. Evaporative emission standards apply to these products as follows:

(1) Marine vessels using spark-ignition engines are subject to the requirements of 40 CFR part 1045. The vessels are not required to comply with the evaporative emission standards and related requirements of this part 1048.

(2) Motor vehicles are subject to the requirements of 40 CFR part 86. They are not required to comply with the evaporative emission standards and related requirements of this part 1048.

[73 FR 59232, Oct. 8, 2008]

§ 1048.110 How must my engines diagnose malfunctions?

The following engine-diagnostic requirements apply for engines equipped with three-way catalysts and closed-loop control of air-fuel ratios:

(a) *Equip your engines with a diagnostic system.* Starting in the 2007 model year, equip each engine with a diagnostic system that will detect significant malfunctions in its emission-control system using one of the following protocols:

(1) If your emission-control strategy depends on maintaining air-fuel ratios at stoichiometry, an acceptable diagnostic design would identify malfunction whenever the air-fuel ratio does not cross stoichiometry for one minute of intended closed-loop operation. You may use other diagnostic strategies if we approve them in advance.

(2) If the protocol described in paragraph (a)(1) of this section does not apply to your engine, you must use an alternative approach that we approve in advance. Your alternative approach must generally detect when the emission-control system is not functioning properly.

(b) *Use a malfunction-indicator light (MIL).* The MIL must be readily visible to the operator; it may be any color except red. When the MIL goes on, it must display ''Check Engine,'' ''Service Engine Soon,'' or a similar message that we approve. You may use sound in addition to the light signal. The MIL must go on under each of the following circumstances:

(1) When a malfunction occurs, as described in paragraph (a) of this section.

(2) When the diagnostic system cannot send signals to meet the requirement of paragraph (b)(1) of this section.

(3) When the engine's ignition is in the ''key-on'' position before starting or cranking. The MIL should go out after engine starting if the system detects no malfunction.

(c) *Control when the MIL can go out.* If the MIL goes on to show a malfunction or system error, it must remain on during all later engine operation until servicing corrects the malfunction. If the engine is not serviced, but the malfunction or system error does not recur for three consecutive engine starts during which the malfunctioning system is evaluated and found to be working properly, the MIL may stay off during later engine operation.

(d) *Store trouble codes in computer memory.* Record and store in computer memory any diagnostic trouble codes showing a malfunction that should illuminate the MIL. The stored codes must identify the malfunctioning system or component as uniquely as possible. Make these codes available through the data link connector as described in paragraph (g) of this section. You may store codes for conditions that do not turn on the MIL. The system must store a separate code to show when the diagnostic system is disabled.

(e) *Make data, access codes, and devices accessible.* Make all required data accessible to us without any access codes or devices that only you can supply. Ensure that anyone servicing your engine can read and understand the diagnostic trouble codes stored in the on-board computer with generic tools and information.

(f) *Consider exceptions for certain conditions.* Your diagnostic systems may disregard trouble codes for the first three minutes after engine starting. You may ask us to approve diagnostic-system designs that disregard trouble codes under other conditions that would produce an unreliable reading, damage systems or components, or cause other safety risks. This might include operation at altitudes over 8,000 feet.

(g) *Follow standard references for formats, codes, and connections.* Follow conventions defined in 40 CFR 1045.110 or in the following documents (incorporated by reference in § 1048.810) or ask us to approve using updated versions of (or variations from) these documents:

(1) ISO 9141–2 Road vehicles-Diagnostic systems—Part 2: CARB requirements for interchange of digital information, February 1994.

(2) ISO 14230–4 Road vehicles—Diagnostic systems—Keyword Protocol 2000—Part 4: Requirements for emission-related systems, June 2000.

[67 FR 68347, Nov. 8, 2002, as amended at 73 FR 59232, Oct. 8, 2008]

§ 1048.115 What other requirements apply?

Engines that are required to meet the emission standards of this part must meet the following requirements:

(a) *Crankcase emissions.* Crankcase emissions may not be discharged directly into the ambient atmosphere from any engine throughout its useful life, except as follows:

(1) Engines may discharge crankcase emissions to the ambient atmosphere if the emissions are added to the exhaust emissions (either physically or mathematically) during all emission testing. If you take advantage of this exception, you must do the following things:

(i) Manufacture the engines so that all crankcase emissions can be routed into the applicable sampling systems specified in 40 CFR part 1065.

(ii) Account for deterioration in crankcase emissions when determining exhaust deterioration factors.

(2) For purposes of this paragraph (a), crankcase emissions that are routed to the exhaust upstream of exhaust aftertreatment during all operation are not considered to be discharged directly into the ambient atmosphere.

(b) *Torque broadcasting.* Electronically controlled engines must broadcast their speed and output shaft torque (in newton-meters). Engines may alternatively broadcast a surrogate value for determining torque. Engines must broadcast engine parameters such that they can be read with a remote device, or broadcast them directly to their controller area networks. This information is necessary for testing engines in the field (see § 1048.515). This requirement applies beginning in the 2007 model year. Small-volume engine manufacturers may omit this requirement.

(c) *EPA access to broadcast information.* If we request it, you must provide us any hardware or tools we would need to readily read, interpret, and record all information broadcast by an engine's on-board computers and electronic control modules. If you broadcast a surrogate parameter for torque values, you must provide us what we need to convert these into torque units. We will not ask for hardware or tools if they are readily available commercially.

(d) [Reserved]

(e) *Adjustable parameters.* Engines that have adjustable parameters must meet all the requirements of this part for any adjustment in the physically

adjustable range. An operating parameter is not considered adjustable if you permanently seal it or if it is not normally accessible using ordinary tools. We may require that you set adjustable parameters to any specification within the adjustable range during any testing, including certification testing, production-line testing, or in-use testing.

(f) *Prohibited controls.* You may not design your engines with emission-control devices, systems, or elements of design that cause or contribute to an unreasonable risk to public health, welfare, or safety while operating. For example, this would apply if the engine emits a noxious or toxic substance it would otherwise not emit that contributes to such an unreasonable risk.

(g) *Defeat devices.* You may not equip your engines with a defeat device. A defeat device is an auxiliary emission-control device that reduces the effectiveness of emission controls under conditions that the engine may reasonably be expected to encounter during normal operation and use. This does not apply to auxiliary-emission control devices you identify in your certification application if any of the following is true:

(1) The conditions of concern were substantially included in the applicable test procedures described in subpart F of this part.

(2) You show your design is necessary to prevent engine (or equipment) damage or accidents.

(3) The reduced effectiveness applies only to starting the engine.

[67 FR 68347, Nov. 8, 2002, as amended at 70 FR 40467, July 13, 2005; 73 FR 59233, Oct. 8, 2008]

§ 1048.120 What emission-related warranty requirements apply to me?

(a) *General requirements.* You must warrant to the ultimate purchaser and each subsequent purchaser that the new nonroad engine, including all parts of its emission-control system, meets two conditions:

(1) It is designed, built, and equipped so it conforms at the time of sale to the ultimate purchaser with the requirements of this part.

(2) It is free from defects in materials and workmanship that may keep it from meeting these requirements.

(b) *Warranty period.* Your emission-related warranty for evaporative emission controls must be valid for at least two years. Your emission-related warranty for exhaust emission controls must be valid for at least 50 percent of the engine's useful life in hours of operation or at least three years, whichever comes first. In the case of a high-cost warranted part, the warranty must be valid for at least 70 percent of the engine's useful life in hours of operation or at least five years, whichever comes first. You may offer an emission-related warranty more generous than we require. The emission-related warranty for the engine may not be shorter than any published warranty you offer without charge for the engine. Similarly, the emission-related warranty for any component may not be shorter than any published warranty you offer without charge for that component. If an engine has no hour meter, we base the warranty periods in this paragraph (b) only on the engine's age (in years). The warranty period begins when the engine is placed into service.

(c) *Components covered.* The emission-related warranty covers all your components whose failure would increase an engine's emissions of any regulated pollutant, including components listed in 40 CFR part 1068, Appendix I, and components from any other system you develop to control emissions. The emission-related warranty covers these components even if another company produces the component for you. Your emission-related warranty does not cover components whose failure would not increase an engine's emissions of any regulated pollutant.

(d) *Limited applicability.* You may deny warranty claims under this section if the operator caused the problem through improper maintenance or use, as described in 40 CFR 1068.115.

(e) *Owners manual.* Describe in the owners manual the emission-related warranty provisions from this section that apply to the engine.

[70 FR 40467, July 13, 2005, as amended at 73 FR 59233, Oct. 8, 2008; 75 FR 23021, Apr. 30, 2010]

§ 1048.125 What maintenance instructions must I give to buyers?

Give the ultimate purchaser of each new nonroad engine written instructions for properly maintaining and using the engine, including the emission-control system. The maintenance instructions also apply to service accumulation on your emission-data engines, as described in 40 CFR part 1065.

(a) *Critical emission-related maintenance.* Critical emission-related maintenance includes any adjustment, cleaning, repair, or replacement of critical emission-related components. This may also include additional emission-related maintenance that you determine is critical if we approve it in advance. You may schedule critical emission-related maintenance on these components if you meet the following conditions:

(1) You demonstrate that the maintenance is reasonably likely to be done at the recommended intervals on in-use engines. We will accept scheduled maintenance as reasonably likely to occur if you satisfy any of the following conditions:

(i) You present data showing that, if a lack of maintenance increases emissions, it also unacceptably degrades the engine's performance.

(ii) You present survey data showing that at least 80 percent of engines in the field get the maintenance you specify at the recommended intervals.

(iii) You provide the maintenance free of charge and clearly say so in your maintenance instructions

(iv) You otherwise show us that the maintenance is reasonably likely to be done at the recommended intervals.

(2) You may not schedule critical emission-related maintenance more frequently than the following minimum intervals, except as specified in paragraphs (a)(3), (b) and (c) of this section:

(i) For catalysts, fuel injectors, electronic control units, superchargers, and turbochargers: The useful life of the engine family.

(ii) For gaseous fuel-system components (cleaning without disassembly only) and oxygen sensors: 2,500 hours.

(3) If your engine family has an alternate useful life under § 1048.101(g) that is shorter than the period specified in paragraph (a)(2)(ii) of this section, you may not schedule critical emission-related maintenance more frequently than the alternate useful life, except as specified in paragraph (c) of this section.

(4) You may ask us to approve a maintenance interval shorter than that specified in paragraphs (a)(2) of this section. In your request you must describe the proposed maintenance step, recommend the maximum feasible interval for this maintenance, include your rationale with supporting evidence to support the need for the maintenance at the recommended interval, and demonstrate that the maintenance will be done at the recommended interval on in-use engines. In considering your request, we will evaluate the information you provide and any other available information to establish alternate specifications for maintenance intervals, if appropriate.

(b) *Recommended additional maintenance.* You may recommend any additional amount of maintenance on the components listed in paragraph (a) of this section, as long as you state clearly that these maintenance steps are not necessary to keep the emission-related warranty valid. If operators do the maintenance specified in paragraph (a) of this section, but not the recommended additional maintenance, this does not allow you to disqualify those engines from in-use testing or deny a warranty claim. Do not take these maintenance steps during service accumulation on your emission-data engines.

(c) *Special maintenance.* You may specify more frequent maintenance to address problems related to special situations, such as substandard fuel or atypical engine operation. For example, you may specify more frequent cleaning of fuel system components for engines you have reason to believe will be using fuel that causes substantially more engine performance problems than commercial fuels of the same type that are generally available across the United States. You must clearly state that this additional maintenance is associated with the special situation you are addressing. We may disapprove your maintenance instructions if we

determine that you have specified special maintenance steps to address engine operation that is not atypical, or that the maintenance is unlikely to occur in use. If we determine that certain maintenance items do not qualify as special maintenance under this paragraph (c), you may identify this as recommended additional maintenance under paragraph (b) of this section.

(d) *Noncritical emission-related maintenance.* Subject to the provisions of this paragraph (d), you may schedule any amount of emission-related inspection or maintenance that is not covered by paragraph (a) of this section (i.e., maintenance that is neither explicitly identified as critical emission-related maintenance, nor that we approve as critical emission-related maintenance). Noncritical emission-related maintenance generally includes changing spark plugs, re-seating valves, or any other emission-related maintenance on the components we specify in 40 CFR part 1068, Appendix I that is not covered in paragraph (a) of this section. You must state in the owners manual that these steps are not necessary to keep the emission-related warranty valid. If operators fail to do this maintenance, this does not allow you to disqualify those engines from in-use testing or deny a warranty claim. Do not take these inspection or maintenance steps during service accumulation on your emission-data engines.

(e) *Maintenance that is not emission-related.* For maintenance unrelated to emission controls, you may schedule any amount of inspection or maintenance. You may also take these inspection or maintenance steps during service accumulation on your emission-data engines, as long as they are reasonable and technologically necessary. This might include adding engine oil, changing air, fuel, or oil filters, servicing engine-cooling systems, and adjusting idle speed, governor, engine bolt torque, valve lash, or injector lash. You may perform this nonemission-related maintenance on emission-data engines at the least frequent intervals that you recommend to the ultimate purchaser (but not the intervals recommended for severe service).

(f) *Source of parts and repairs.* State clearly on the first page of your written maintenance instructions that a repair shop or person of the owner's choosing may maintain, replace, or repair emission-control devices and systems. Your instructions may not require components or service identified by brand, trade, or corporate name. Also, do not directly or indirectly condition your warranty on a requirement that the engine be serviced by your franchised dealers or any other service establishments with which you have a commercial relationship. You may disregard the requirements in this paragraph (f) if you do one of two things:

(1) Provide a component or service without charge under the purchase agreement.

(2) Get us to waive this prohibition in the public's interest by convincing us the engine will work properly only with the identified component or service.

(g) *Payment for scheduled maintenance.* Owners are responsible for properly maintaining their engines. This generally includes paying for scheduled maintenance. However, manufacturers must pay for scheduled maintenance during the useful life if it meets all the following criteria:

(1) Each affected component was not in general use on similar engines before January 1, 2004.

(2) The primary function of each affected component is to reduce emissions.

(3) The cost of the scheduled maintenance is more than 2 percent of the price of the engine.

(4) Failure to perform the maintenance would not cause clear problems that would significantly degrade the engine's performance.

(h) *Owners manual.* Explain the owner's responsibility for proper maintenance in the owners manual.

[70 FR 40468, July 13, 2005, as amended at 73 FR 59233, Oct. 8, 2008; 75 FR 23021, Apr. 30, 2010]

§ 1048.130 What installation instructions must I give to equipment manufacturers?

(a) If you sell an engine for someone else to install in a piece of nonroad equipment, give the engine installer instructions for installing it consistent

with the requirements of this part. Include all information necessary to ensure that an engine will be installed in its certified configuration.

(b) Make sure these instructions have the following information:

(1) Include the heading: ''Emission-related installation instructions''.

(2) State: ''Failing to follow these instructions when installing a certified engine in a piece of nonroad equipment violates federal law (40 CFR 1068.105(b)), subject to fines or other penalties as described in the Clean Air Act.''.

(3) Describe the instructions needed to properly install the exhaust system and any other components. Include instructions consistent with the requirements of § 1048.205(v).

(4) Describe the steps needed to control evaporative emissions, as described in §§ 1048.105 and 1048.245.

(5) Describe any necessary steps for installing the diagnostic system described in § 1048.110.

(6) Describe any limits on the range of applications needed to ensure that the engine operates consistently with your application for certification. For example, if your engines are certified only for constant-speed operation, tell equipment manufacturers not to install the engines in variable-speed applications. Also, if you need to avoid sustained high-load operation to meet the field-testing emission standards we specify in § 1048.101(c) or to comply with the provisions of § 1048.101(d), describe how the equipment manufacturer must properly size the engines for a given application.

(7) Describe any other instructions to make sure the installed engine will operate according to design specifications in your application for certification. This may include, for example, instructions for installing aftertreatment devices when installing the engines.

(8) State: ''If you install the engine in a way that makes the engine's emission control information label hard to read during normal engine maintenance, you must place a duplicate label on the equipment, as described in 40 CFR 1068.105.''.

(c) You do not need installation instructions for engines you install in your own equipment.

(d) Provide instructions in writing or in an equivalent format. For example, you may post instructions on a publicly available Web site for downloading or printing. If you do not provide the instructions in writing, explain in your application for certification how you will ensure that each installer is informed of the installation requirements.

[67 FR 68347, Nov. 8, 2002, as amended at 70 FR 40469, July 13, 2005]

§ 1048.135 How must I label and identify the engines I produce?

(a) Assign each engine a unique identification number and permanently affix, engrave, or stamp it on the engine in a legible way.

(b) At the time of manufacture, affix a permanent and legible label identifying each engine. The label must be—

(1) Attached in one piece so it is not removable without being destroyed or defaced.

(2) Secured to a part of the engine needed for normal operation and not normally requiring replacement.

(3) Durable and readable for the engine's entire life.

(4) Written in English.

(c) The label must—

(1) Include the heading ''EMISSION CONTROL INFORMATION''.

(2) Include your full corporate name and trademark. You may identify another company and use its trademark instead of yours if you comply with the provisions of § 1048.635.

(3) Include EPA's standardized designation for the engine family (and subfamily, where applicable).

(4) State the engine's displacement (in liters); however, you may omit this from the label if all the engines in the engine family have the same per-cylinder displacement and total displacement.

(5) State the date of manufacture [DAY (optional), MONTH, and YEAR]; however, you may omit this from the label if you stamp, engrave, or otherwise permanently identify it elsewhere on the engine, in which case you must also describe in your application for certification where you will identify the date on the engine.

(6) Identify the emission control system. Use terms and abbreviations as

described in 40 CFR 1068.45. You may omit this information from the label if there is not enough room for it and you put it in the owners manual instead.

(7) State: ''THIS ENGINE IS CERTIFIED TO OPERATE ON [specify operating fuel or fuels].''

(8) Identify any requirements for fuel and lubricants. You may omit this information from the label if there is not enough room for it and you put it in the owners manual instead.

(9) List specifications and adjustments for engine tuneups; show the proper position for the transmission during tuneup and state which accessories should be operating. You may omit this information from the label if there is not enough room for it and you put it in the owners manual instead.

(10) State the useful life for your engine family if it has a longer useful life under § 1048.101(g)(1) or a shortened useful life under § 1048.101(g)(2).

(11) Identify the emission standards to which you have certified the engine (in g/kW-hr).

(12) Include one of the following compliance statements:

(i) For engines that may be used in nonroad or stationary equipment, state: ''THIS ENGINE COMPLIES WITH U.S. EPA REGULATIONS FOR [MODEL YEAR] NONROAD AND STATIONARY ENGINES.''

(ii) For engines that will be used only in nonroad equipment, state: ''THIS ENGINE COMPLIES WITH U.S. EPA REGULATIONS FOR [MODEL YEAR] NONROAD ENGINES.''

(iii) For engines that will be used only in stationary equipment, state: ''THIS ENGINE COMPLIES WITH U.S. EPA REGULATIONS FOR [MODEL YEAR] STATIONARY ENGINES.''

(13) Include any of the following additional statements for special situations if they apply to your engines:

(i) If your engines are certified only for constant-speed operation, state: ''USE IN CONSTANT-SPEED APPLICATIONS ONLY.''

(ii) If your engines are certified only for variable-speed operation, state: ''USE IN VARIABLE-SPEED APPLICATIONS ONLY.''

(iii) If your engines are certified only for high-load engines, state: ''THIS ENGINE IS NOT INTENDED FOR OPERATION AT LESS THAN 75 PERCENT OF FULL LOAD.''

(iv) If you certify your engines under § 1048.101(d), and show in your application for certification that in-use engines will experience infrequent high-load operation, state: ''THIS ENGINE IS NOT INTENDED FOR OPERATION AT MORE THAN PERCENT OF FULL LOAD.'' Specify the appropriate percentage of full load based on the nature of the engine protection. You may add other statements to discourage operation in engine-protection modes.

(v) If your engines are certified to the voluntary standards in § 1048.140, state: ''BLUE SKY SERIES'' and identify the standard to which you certify the engines.

(d) You may add information to the emission control information label to identify other emission standards that the engine meets or does not meet (such as California standards). You may also add other information to ensure that the engine will be properly maintained and used.

(e) You may ask us to approve modified labeling requirements in this part 1048 if you show that it is necessary or appropriate. We will approve your request if your alternate label is consistent with the requirements of this part.

(f) If you obscure the engine label while installing the engine in the equipment such that the label cannot be read during normal maintenance, you must place a duplicate label on the equipment. If others install your engine in their equipment in a way that obscures the engine label, we require them to add a duplicate label on the equipment (see 40 CFR 1068.105); in that case, give them the number of duplicate labels they request and keep the following records for at least five years:

(1) Written documentation of the request from the equipment manufacturer.

(2) The number of duplicate labels you send for each engine family and the date you sent them.

[70 FR 40469, July 13, 2005, as amended at 73 FR 59233, Oct. 8, 2008]

§ 1048.140 What are the provisions for certifying Blue Sky Series engines?

This section defines voluntary standards for a recognized level of superior emission control for engines designated as ''Blue Sky Series'' engines. If you certify an engine family under this section, it is subject to all the requirements of this part as if these voluntary standards were mandatory. To receive a certificate of conformity as ''Blue Sky Series,'' you must certify to one of the sets of exhaust emission standards in the following table:

TABLE 1 OF § 1048.140—STANDARDS FOR BLUE SKY SERIES ENGINES (G/KW–HR)

Standards for steady-state and transient test procedures		Standards for field-testing procedures	
$HC+NO_X$	CO	$HC+NO_X$	CO
0.80	4.4	1.10	6.6
0.60	4.4	0.84	6.6
0.40	4.4	0.56	6.6
0.20	4.4	0.28	6.6
0.10	4.4	0.14	6.6

[73 FR 59234, Oct. 8, 2008]

§ 1048.145 Are there interim provisions that apply only for a limited time?

The provisions in this section apply instead of other provisions in this part. This section describes when these interim provisions expire.

(a) *Family banking*. This paragraph (a) allows you to reduce the number of engines subject to the Tier 2 standards by certifying some of your engines earlier than otherwise required, as follows:

(1) For early-compliant engines to generate offsets under this paragraph (a), you must meet the following general provisions:

(i) You must begin actual production of early-compliant engines by September 1, 2006.

(ii) Engines you produce after December 31, 2006 may not generate offsets.

(iii) Offset-generating engines must be certified to the Tier 2 standards and requirements under this part 1048.

(iv) If you certify engines under the voluntary standards of § 1048.140, you may not use them in your calculation under this paragraph (a).

(2) For every offset-generating engine certified to the Tier 2 standards, you may reduce the number of engines with the same maximum engine power that are required to meet the Tier 2 standards in later model years by one engine. You may calculate power-weighted offsets based on actual U.S.-directed sales volumes. For example, if you produce a total of 1,000 engines in 2005 and 2006 with an average maximum power of 60 kW certified to the Tier 2 standards, you may delay certification to that tier of standards for up to 60,000 kW-engine-years in any of the following ways:

(i) Delay certification of up to 600 engines with an average maximum power of 100 kW for one model year.

(ii) Delay certification of up to 200 engines with an average maximum power of 100 kW for three consecutive model years.

(iii) Delay certification of up to 400 engines with an average maximum power of 100 kW for one model year and up to 50 engines with an average maximum power of 200 kW for two model years.

(3) Offset-using engines (that is, those not required to certify to the Tier 2 standards) must be certified to the Tier 1 standards and requirements of this part 1048. You may delay compliance for up to three model years.

(4) By January 31 of each year in which you use the provisions of this paragraph (a), send us a report describing how many offset-generating or offset-using engines you produced in the preceding model year.

(b) *Hydrocarbon standards*. For 2004 through 2006 model years, engine manufacturers may use nonmethane hydrocarbon measurements to demonstrate compliance with applicable emission standards.

(c) [Reserved]

(d) *Tier 1 deterioration factors*. For Tier 1 engines, base the deterioration factor from § 1048.240 on 3500 hours of operation. We may assign a deterioration factor for a Tier 1 engine family, but this would not affect your need to meet all emission standards that apply.

(e) [Reserved]

(f) *Optional early field testing*. You may optionally use the field-testing procedures in subpart F of this part for any in-use testing required under subpart E of this part to show that you

meet Tier 1 standards. In this case, the same Tier 1 in-use emission standards apply to both steady-state testing in the laboratory and field testing.

(g) *Small-volume provisions.* If you qualify for the hardship provisions in § 1068.250 of this chapter, we may approve extensions of up to four years total.

(h) *2004 certification.* For the 2004 model year, you may choose to have the emission standards and other requirements that apply to these engines in California serve as the emission standards and other requirements applicable under this part, instead of those in subpart A of this part. To ask for a certificate under this paragraph (h), send us the application for certification that you prepare for the California Air Resources Board instead of the information we otherwise require in § 1048.205.

(i) *Recreational vehicles.* Engines or vehicles identified in the scope of 40 CFR part 1051 that are not yet regulated under that part are excluded from the requirements of this part. For example, snowmobiles produced in 2004 are not subject to the emission standards in this part. Once emission standards apply to these engines and vehicles, they are excluded from the requirements of this part under § 1048.5(a)(1).

(j) Delayed compliance with labeling requirements. Before the 2010 model year, you may omit the dates of manufacture from the emission control information label as specified in § 1048.135(c)(5) if you keep those records and provide them to us upon request.

(k) Delayed compliance with fuel tank permeation requirements. Before the 2010 model year, you may omit the permeation-related requirements related to plastic fuel tanks in § 1048.245(e)(1)(i) and § 1048.501(e).

[67 FR 68347, Nov. 8, 2002, as amended at 70 FR 40470, July 13, 2005; 73 FR 59234, Oct. 8, 2008]

Subpart C—Certifying Engine Families

§ 1048.201 What are the general requirements for obtaining a certificate of conformity?

(a) You must send us a separate application for a certificate of conformity for each engine family. A certificate of conformity is valid starting with the indicated effective date, but it is not valid for any production after December 31 of the model year for which it is issued. No certificate will be issued after December 31 of the model year.

(b) The application must contain all the information required by this part and must not include false or incomplete statements or information (see § 1048.255).

(c) We may ask you to include less information than we specify in this subpart, as long as you maintain all the information required by § 1048.250.

(d) You must use good engineering judgment for all decisions related to your application (see 40 CFR 1068.5).

(e) An authorized representative of your company must approve and sign the application.

(f) See § 1048.255 for provisions describing how we will process your application.

(g) We may require you to deliver your test engines to a facility we designate for our testing (see § 1048.235(c)).

(h) For engines that become new after being placed into service, such as engines converted to nonroad use after being used in motor vehicles, we may specify alternate certification provisions consistent with the intent of this part. *See* the definition of ''new nonroad engine'' in § 1048.801.

[70 FR 40470, July 13, 2005, as amended at 73 FR 59234, Oct. 8, 2008; 75 FR 23022, Apr. 30, 2010]

§ 1048.205 What must I include in my application?

This section specifies the information that must be in your application, unless we ask you to include less information under § 1048.201(c). We may require you to provide additional information to evaluate your application.

(a) Describe the engine family's specifications and other basic parameters

of the engine's design and emission controls. List the fuel types on which your engines are designed to operate (for example, gasoline and natural gas). List each distinguishable engine configuration in the engine family.

(b) Explain how the emission control systems operate. Describe the evaporative emission controls, if applicable. Also describe in detail all system components for controlling exhaust emissions, including all auxiliary emission control devices (AECDs) and all fuel-system components you will install on any production or test engine. Identify the part number of each component you describe. For this paragraph (b), treat as separate AECDs any devices that modulate or activate differently from each other. Include sufficient detail to allow us to evaluate whether the AECDs are consistent with the defeat device prohibition of § 1048.115.

(c) Explain how the engine diagnostic system works, describing especially the engine conditions (with the corresponding diagnostic trouble codes) that cause the malfunction-indicator light to go on. Propose what you consider to be extreme conditions under which the diagnostic system should disregard trouble codes, as described in § 1048.110.

(d) Describe the engines you selected for testing and the reasons for selecting them.

(e) Describe the test equipment and procedures that you used, including any special or alternate test procedures you used (see § 1048.501).

(f) Describe how you operated the emission-data engine before testing, including the duty cycle and the number of engine operating hours used to stabilize emission levels. Explain why you selected the method of service accumulation. Describe any scheduled maintenance you did.

(g) List the specifications of each test fuel to show that it falls within the required ranges we specify in 40 CFR part 1065, subpart H.

(h) Identify the engine family's useful life.

(i) Include the maintenance instructions you will give to the ultimate purchaser of each new nonroad engine (see § 1048.125).

(j) Include the emission-related installation instructions you will provide if someone else installs your engines in a piece of nonroad equipment (see § 1048.130).

(k) Identify each high-cost warranted part and show us how you calculated its replacement cost, including the estimated retail cost of the part, labor rates, and labor hours to diagnose and replace defective parts.

(l) Describe your emission control information label (see § 1048.135).

(m) Identify the emission standards to which you are certifying engines in the engine family.

(n) Identify the engine family's deterioration factors and describe how you developed them (see § 1048.240). Present any emission test data you used for this.

(o) State that you operated your emission-data engines as described in the application (including the test procedures, test parameters, and test fuels) to show you meet the requirements of this part.

(p) Present emission data to show that you meet emission standards, as follows:

(1) Present exhaust emission data for HC, NO_X, and CO on an emission-data engine to show your engines meet the applicable duty-cycle emission standards we specify in § 1048.101. Show emission figures before and after applying deterioration factors for each engine. Include emission results for each mode if you do discrete-mode testing under § 1048.505. Include test data for each type of fuel from 40 CFR part 1065, subpart H, on which you intend for engines in the engine family to operate (for example, gasoline, liquefied petroleum gas, methanol, or natural gas). If we specify more than one grade of any fuel type (for example, a summer grade and winter grade of gasoline), you need to submit test data only for one grade unless the regulations of this part specify otherwise for your engine. Note that § 1048.235 allows you to submit an application in certain cases without new emission data.

(2) If your engine family includes a volatile liquid fuel (and you do not use design-based certification under § 1048.245), present evaporative test data to show your vehicles meet the

evaporative emission standards we specify in subpart B of this part. Show these figures before and after applying deterioration factors, where applicable.

(q) State that all the engines in the engine family comply with the field-testing emission standards we specify in §1048.101(c) for all normal operation and use when tested as specified in §1048.515. Describe any relevant testing, engineering analysis, or other information in sufficient detail to support your statement.

(r) For engines not subject to transient testing requirements in §148.101(a), include information showing how your emission controls will function during normal in-use transient operation. For example, this might include the following:

(1) Emission data from transient testing of engines using measurement systems designed for measuring in-use emissions.

(2) Comparison of the engine design for controlling transient emissions with that from engines for which you have emission data over the transient duty cycle for certification.

(3) Detailed descriptions of control algorithms and other design parameters for controlling transient emissions.

(s) Report test results as follows:

(1) Report all test results involving measurement of pollutants for which emission standards apply. Include test results from invalid tests or from any other tests, whether or not they were conducted according to the test procedures of subpart F of this part. We may ask you to send other information to confirm that your tests were valid under the requirements of this part and 40 CFR part 1065.

(2) Report measured CO_2, N_2O, and CH_4 as described in §1048.235. Small-volume engine manufacturers may omit reporting N_2O and CH_4.

(t) Describe all adjustable operating parameters (see §1048.115(e)), including production tolerances. Include the following in your description of each parameter:

(1) The nominal or recommended setting.

(2) The intended physically adjustable range.

(3) The limits or stops used to establish adjustable ranges.

(4) Information showing why the limits, stops, or other means of inhibiting adjustment are effective in preventing adjustment of parameters on in-use engines to settings outside your intended physically adjustable ranges.

(u) Provide the information to read, record, and interpret all the information broadcast by an engine's onboard computers and electronic control units. State that, upon request, you will give us any hardware, software, or tools we would need to do this. If you broadcast a surrogate parameter for torque values, you must provide us what we need to convert these into torque units. You may reference any appropriate publicly released standards that define conventions for these messages and parameters. Format your information consistent with publicly released standards.

(v) Confirm that your emission-related installation instructions specify how to ensure that sampling of exhaust emissions will be possible after engines are installed in equipment and placed in service. If this cannot be done by simply adding a 20-centimeter extension to the exhaust pipe, show how to sample exhaust emissions in a way that prevents diluting the exhaust sample with ambient air.

(w) State whether your certification is intended to include engines used in stationary applications. Also state whether your certification is limited for certain engines. If this is the case, describe how you will prevent use of these engines in applications for which they are not certified. This applies for engines such as the following:

(1) Constant-speed engines.

(2) Variable-speed engines.

(x) Unconditionally certify that all the engines in the engine family comply with the requirements of this part, other referenced parts of the CFR, and the Clean Air Act.

(y) Include good-faith estimates of U.S.-directed production volumes. Include a justification for the estimated production volumes if they are substantially different than actual production volumes in earlier years for similar models.

(z) Include other applicable information, such as information specified in this part or part 1068 of this chapter related to requests for exemptions.

(aa) Name an agent for service located in the United States. Service on this agent constitutes service on you or any of your officers or employees for any action by EPA or otherwise by the United States related to the requirements of this part.

[70 FR 40470, July 13, 2005, as amended at 73 FR 3613, Jan. 18, 2008; 73 FR 59234, Oct. 8, 2008; 74 FR 56510, Oct. 30, 2009]

§ 1048.210 May I get preliminary approval before I complete my application?

If you send us information before you finish the application, we will review it and make any appropriate determinations, especially for questions related to engine family definitions, auxiliary emission-control devices, deterioration factors, testing for service accumulation, and maintenance. Decisions made under this section are considered to be preliminary approval, subject to final review and approval. We will generally not reverse a decision where we have given you preliminary approval, unless we find new information supporting a different decision. If you request preliminary approval related to the upcoming model year or the model year after that, we will make best-efforts to make the appropriate determinations as soon as practicable. We will generally not provide preliminary approval related to a future model year more than two years ahead of time.

[70 FR 40472, July 13, 2005]

§ 1048.220 How do I amend the maintenance instructions in my application?

You may amend your emission-related maintenance instructions after you submit your application for certification as long as the amended instructions remain consistent with the provisions of § 1048.125. You must send the Designated Compliance Officer a written request to amend your application for certification for an engine family if you want to change the emission-related maintenance instructions in a way that could affect emissions. In your request, describe the proposed changes to the maintenance instructions. If operators follow the original maintenance instructions rather than the newly specified maintenance, this does not allow you to disqualify those engines from in-use testing or deny a warranty claim.

(a) If you are decreasing or eliminating any specified maintenance, you may distribute the new maintenance instructions to your customers 30 days after we receive your request, unless we disapprove your request. This would generally include replacing one maintenance step with another. We may approve a shorter time or waive this requirement.

(b) If your requested change would not decrease the specified maintenance, you may distribute the new maintenance instructions anytime after you send your request. For example, this paragraph (b) would cover adding instructions to increase the frequency of a maintenance step for engines in severe-duty applications.

(c) You need not request approval if you are making only minor corrections (such as correcting typographical mistakes), clarifying your maintenance instructions, or changing instructions for maintenance unrelated to emission control. We may ask you to send us copies of maintenance instructions revised under this paragraph (c).

[70 FR 40472, July 13, 2005, as amended at 73 FR 59235, Oct. 8, 2008; 75 FR 23022, Apr. 30, 2010]

§ 1048.225 How do I amend my application for certification to include new or modified engine configurations?

Before we issue you a certificate of conformity, you may amend your application to include new or modified engine configurations, subject to the provisions of this section. After we have issued your certificate of conformity, you may send us an amended application requesting that we include new or modified engine configurations within the scope of the certificate, subject to the provisions of this section. You must amend your application if any changes occur with respect to any information included in your application.

(a) You must amend your application before you take any of the following actions:

(1) Add an engine configuration to an engine family. In this case, the engine configuration added must be consistent with other engine configurations in the engine family with respect to the criteria listed in § 1048.230.

(2) Change an engine configuration already included in an engine family in a way that may affect emissions, or change any of the components you described in your application for certification. This includes production and design changes that may affect emissions any time during the engine's lifetime.

(b) To amend your application for certification, send the Designated Compliance Officer the following information:

(1) Describe in detail the addition or change in the engine model or configuration you intend to make.

(2) Include engineering evaluations or data showing that the amended engine family complies with all applicable requirements. You may do this by showing that the original emission-data engine is still appropriate for showing that the amended family complies with all applicable requirements.

(3) If the original emission-data engine for the engine family is not appropriate to show compliance for the new or modified engine configuration, include new test data showing that the new or modified engine configuration meets the requirements of this part.

(c) We may ask for more test data or engineering evaluations. You must give us these within 30 days after we request them.

(d) For engine families already covered by a certificate of conformity, we will determine whether the existing certificate of conformity covers your newly added or modified engine. You may ask for a hearing if we deny your request (see § 1048.820).

(e) For engine families already covered by a certificate of conformity, you may start producing the new or modified engine configuration anytime after you send us your amended application and before we make a decision under paragraph (d) of this section. However, if we determine that the affected engines do not meet applicable requirements, we will notify you to cease production of the engines and may require you to recall the engines at no expense to the owner. Choosing to produce engines under this paragraph (e) is deemed to be consent to recall all engines that we determine do not meet applicable emission standards or other requirements and to remedy the nonconformity at no expense to the owner. If you do not provide information required under paragraph (c) of this section within 30 days after we request it, you must stop producing the new or modified engines.

[73 FR 59235, Oct. 8, 2008]

§ 1048.230 How do I select engine families?

(a) For purposes of certification, divide your product line into families of engines that are expected to have similar emission characteristics throughout the useful life as described in this section. Your engine family is limited to a single model year.

(b) Group engines in the same engine family if they are the same in all of the following aspects:

(1) The combustion cycle.

(2) The cooling system (water-cooled vs. air-cooled).

(3) Configuration of the fuel system (for example, fuel-injected vs. carbureted gasoline engines).

(4) Method of air aspiration.

(5) The number, location, volume, and composition of catalytic converters.

(6) The number, arrangement (such as in-line or vee configuration), and approximate bore diameter of cylinders.

(c) You may subdivide a group of engines that is identical under paragraph (b) of this section into different engine families if you show the expected emission characteristics are different during the useful life.

(d) In unusual circumstances, you may group engines that are not identical with respect to the things listed in paragraph (b) of this section in the same engine family if you show that their emission characteristics during the useful life will be similar.

(e) You may create separate families for exhaust emissions and evaporative

emissions. If we do this, list both families on the emission control information label.

(f) Where necessary, you may divide an engine family into sub-families to meet different emission standards, as specified in §1048.101(a)(2). For issues related to compliance and prohibited actions, we will generally apply decisions to the whole engine family. For engine labels and other administrative provisions, we may approve your request for separate treatment of sub-families.

[70 FR 40473, July 13, 2005, as amended at 73 FR 59235, Oct. 8, 2008; 75 FR 23022, Apr. 30, 2010]

§1048.235 What emission testing must I perform for my application for a certificate of conformity?

This section describes the emission testing you must perform to show compliance with the emission standards in §§1048.101(a) and (b) and 1048.105 during certification. See §1048.205(q) regarding emission testing related to the field-testing standards. See §1048.240 and 40 CFR part 1065, subpart E, regarding service accumulation before emission testing.

(a) Test your emission-data engines using the procedures and equipment specified in subpart F of this part.

(b) Select emission-data engines according to the following criteria:

(1) *Exhaust testing.* For each fuel type from each engine family, select an emission-data engine with a configuration that is most likely to exceed the exhaust emission standards, using good engineering judgment. Consider the emission levels of all exhaust constituents over the full useful life of the engine when operated in a piece of equipment.

(2) *Evaporative testing.* For each engine family that includes a volatile liquid fuel, select a test fuel system with a configuration that is most likely to exceed the evaporative emission standards, using good engineering judgment.

(c) We may measure emissions from any of your test engines or other engines from the engine family, as follows:

(1) We may decide to do the testing at your plant or any other facility. If we do this, you must deliver the test engine to a test facility we designate. The test engine you provide must include appropriate manifolds, aftertreatment devices, electronic control units, and other emission-related components not normally attached directly to the engine block. If we do the testing at your plant, you must schedule it as soon as possible and make available the instruments, personnel, and equipment we need.

(2) If we measure emissions on one of your test engines, the results of that testing become the official emission results for the engine. Unless we later invalidate these data, we may decide not to consider your data in determining if your engine family meets applicable requirements.

(3) Before we test one of your engines, we may set its adjustable parameters to any point within the physically adjustable ranges (see §1048.115(e)).

(4) Before we test one of your engines, we may calibrate it within normal production tolerances for anything we do not consider an adjustable parameter. For example, this would apply where we determine that an engine parameter is not an adjustable parameter (as defined in §1048.801) but that it is subject to production variability.

(d) You may ask to use carryover emission data from a previous model year instead of doing new tests, but only if all the following are true:

(1) The engine family from the previous model year differs from the current engine family only with respect to model year or other characteristics unrelated to emissions. You may also ask to add a configuration subject to §1048.225.

(2) The emission-data engine from the previous model year remains the appropriate emission-data engine under paragraph (b) of this section.

(3) The data show that the emission-data engine would meet all the requirements that apply to the engine family covered by the application for certification.

(e) We may require you to test another engine of the same or different configuration in addition to the engine tested under paragraph (b) of this section.

(f) If you use an alternate test procedure under 40 CFR 1065.10 and later testing shows that such testing does not produce results that are equivalent to the procedures specified in subpart F of this part, we may reject data you generated using the alternate procedure.

(g) Measure CO_2 and CH_4 with each low-hour certification test using the procedures specified in 40 CFR part 1065 starting in the 2011 and 2012 model years, respectively. Also measure N_2O with each low-hour certification test using the procedures specified in 40 CFR part 1065 starting in the 2013 model year for any engine family that depends on NOx aftertreatment to meet emission standards. Small-volume engine manufacturers may omit measurement of N_2O and CH_4. These measurements are not required for measurements using field-testing procedures. Use the same units and modal calculations as for your other results to report a single weighted value for each constituent. Round the final values as follows:

(1) Round CO_2 to the nearest 1 g/kW-hr.

(2) Round N_2O to the nearest 0.001 g/kW-hr.

(3) Round CH_4 to the nearest 0.001g/kW-hr.

[70 FR 40473, July 13, 2005, as amended at 73 FR 59235, Oct. 8, 2008; 74 FR 56510, Oct. 30, 2009]

§ 1048.240 How do I demonstrate that my engine family complies with exhaust emission standards?

(a) For purposes of certification, your engine family is considered in compliance with the applicable numerical emission standards in § 1048.101(a) and (b) if all emission-data engines representing that family have test results showing official emission results and deteriorated emission levels at or below these standards. This includes all test points over the course of the durability demonstration. This also applies for all test points for emission-data engines within the family used to establish deterioration factors. *See* paragraph (e) of this section for provisions related to demonstrating compliance with field-testing standards.

(b) Your engine family is deemed not to comply if any emission-data engine representing that family has test results showing an official emission result or a deteriorated emission level for any pollutant that is above an applicable emission standard from § 1048.101(a) and (b). Similarly, your engine family is deemed not to comply if any emission-data engine representing that family has test results showing any emission level above the applicable field-testing standard for any pollutant. This also applies for all test points for emission-data engines within the family used to establish deterioration factors.

(c) To compare emission levels from the emission-data engine with the applicable emission standards, apply deterioration factors to the measured emission levels for each pollutant. Specify the deterioration factors based on emission measurements using four significant figures, consistent with good engineering judgment. For example, your deterioration factors must take into account any available data from in-use testing with similar engines (see subpart E of this part). Small-volume engine manufacturers may use assigned deterioration factors that we establish. In addition, anyone may use assigned deterioration factors for engine families with a projected U.S.-directed production volume at or below 300 engines. Apply deterioration factors as follows:

(1) *Multiplicative deterioration factor*. Except as specified in paragraph (c)(2) of this section, use a multiplicative deterioration factor for exhaust emissions. A multiplicative deterioration factor is the ratio of exhaust emissions at the end of useful life to exhaust emissions at the low-hour test point. Adjust the official emission results for each tested engine at the selected test point by multiplying the measured emissions by the deterioration factor. If the factor is less than one, use one.

(2) *Additive deterioration factor*. Use an additive deterioration factor for exhaust emissions if engines do not use aftertreatment technology. Also, you may use an additive deterioration factor for exhaust emissions for a particular pollutant if all the emission-data engines in the engine family have

low-hour emission levels at or below 0.3 g/kW-hr for HC+NO_X or 0.5 g/kW-hr for CO, unless a multiplicative deterioration factor is more appropriate. For example, you should use a multiplicative deterioration factor if emission increases are best represented by the ratio of exhaust emissions at the end of the useful life to exhaust emissions at the low-hour test point. An additive deterioration factor is the difference between exhaust emissions at the end of useful life and exhaust emissions at the low-hour test point. Adjust the official emission results for each tested engine at the selected test point by adding the factor to the measured emissions. If the factor is less than zero, use zero.

(d) Collect emission data using measurements to one more decimal place than the applicable standard. Apply the deterioration factor to the official emission result, as described in paragraph (c) of this section, then round the adjusted figure to the same number of decimal places as the emission standard. Compare the rounded emission levels to the emission standard for each emission-data engine. In the case of HC + NO_X standards, apply the deterioration factor to each pollutant and then add the results before rounding.

(e) Use good engineering judgment to demonstrate compliance with field-testing standards throughout the useful life. You may, but are not required to, apply the same deterioration factors used to show compliance with the applicable duty-cycle standards.

[70 FR 40474, July 13, 2005, as amended at 73 FR 59236, Oct. 8, 2008; 75 FR 23022, Apr. 30, 2010]

§ 1048.245 How do I demonstrate that my engine family complies with evaporative emission standards?

(a) For certification, your engine family is considered in compliance with the evaporative emission standards in subpart B of this part if you do either of the following:

(1) You have test results showing that evaporative emissions in the family are at or below the standards throughout the useful life.

(2) Where applicable, you comply with the design specifications in paragraph (e) of this section.

(b) Your engine family does not comply if any fuel system representing that family has test results showing emission levels above the standards.

(c) Use good engineering judgment to develop a test plan to establish deterioration factors to show how much emissions increase at the end of the useful life.

(d) If you adjust the emission levels for deterioration, round them to the same number of decimal places as the emission standard. Compare the rounded emission levels to the emission standard for each test fuel system.

(e) You may demonstrate that your engine family complies with the evaporative emission standards by demonstrating that you use the following control technologies:

(1) For certification to the standards specified in § 1048.105(c), with the following technologies:

(i) Use a tethered or self-closing gas cap on a fuel tank that stays sealed up to a positive pressure of 24.5 kPa (3.5 psig); however, they may contain air inlets that open when there is a vacuum pressure inside the tank. Nonmetal fuel tanks must also use one of the qualifying designs for controlling permeation emissions specified in 40 CFR 1060.240.

(ii) [Reserved]

(2) For certification to the standards specified in § 1048.105(d), demonstrating that you use design features to prevent fuel boiling under all normal operation. If you install engines in equipment, you may do this using fuel temperature data measured during normal operation. Otherwise, you may do this by including appropriate information in your emission-related installation instructions.

(3) We may establish additional options for design-based certification where we find that new test data demonstrate that a technology will ensure compliance with the emission standards in this section.

[67 FR 68347, Nov. 8, 2002, as amended at 70 FR 40474, July 13, 2005; 73 FR 59236, Oct. 8, 2008; 75 FR 23022, Apr. 30, 2010]

§ 1048.250 What records must I keep and make available to EPA?

(a) Send the Designated Compliance Officer information related to your

U.S.-directed production volumes as described in § 1048.345. In addition, within 45 days after the end of the model year, you must send us a report describing information about engines you produced during the model year as follows:

(1) State the total production volume for each engine family that is not subject to reporting under § 1048.345.

(2) State the total production volume for any engine family for which you produce engines after completing the reports required in § 1048.345.

(3) For production volumes you report under this paragraph (a), identify whether or not the figures include California sales. Include a separate count of production volumes for California sales if those figures are available.

(b) Organize and maintain the following records:

(1) A copy of all applications and any summary information you send us.

(2) Any of the information we specify in § 1048.205 that you were not required to include in your application.

(3) A detailed history of each emission-data engine. For each engine, describe all of the following:

(i) The emission-data engine's construction, including its origin and buildup, steps you took to ensure that it represents production engines, any components you built specially for it, and all the components you include in your application for certification.

(ii) How you accumulated engine operating hours (service accumulation), including the dates and the number of hours accumulated.

(iii) All maintenance, including modifications, parts changes, and other service, and the dates and reasons for the maintenance.

(iv) All your emission tests, including documentation on routine and standard tests, as specified in part 40 CFR part 1065, and the date and purpose of each test.

(v) All tests to diagnose engine or emission-control performance, giving the date and time of each and the reasons for the test.

(vi) Any other significant events.

(4) Production figures for each engine family divided by assembly plant.

(5) Keep a list of engine identification numbers for all the engines you produce under each certificate of conformity.

(c) Keep data from routine emission tests (such as test cell temperatures and relative humidity readings) for one year after we issue the associated certificate of conformity. Keep all other information specified in this section for eight years after we issue your certificate.

(d) Store these records in any format and on any media, as long as you can promptly send us organized, written records in English if we ask for them. You must keep these records readily available. We may review them at any time.

[67 FR 68347, Nov. 8, 2002, as amended at 70 FR 40474, July 13, 2005; 73 FR 59236, Oct. 8, 2008]

§ 1048.255 What decisions may EPA make regarding my certificate of conformity?

(a) If we determine your application is complete and shows that the engine family meets all the requirements of this part and the Act, we will issue a certificate of conformity for your engine family for that model year. We may make the approval subject to additional conditions.

(b) We may deny your application for certification if we determine that your engine family fails to comply with emission standards or other requirements of this part or the Clean Air Act. We will base our decision on all available information. If we deny your application, we will explain why in writing.

(c) In addition, we may deny your application or suspend or revoke your certificate if you do any of the following:

(1) Refuse to comply with any testing or reporting requirements.

(2) Submit false or incomplete information (paragraph (e) of this section applies if this is fraudulent).

(3) Render inaccurate any test data.

(4) Deny us from completing authorized activities despite our presenting a warrant or court order (see 40 CFR 1068.20). This includes a failure to provide reasonable assistance.

(5) Produce engines for importation into the United States at a location

where local law prohibits us from carrying out authorized activities.

(6) Fail to supply requested information or amend your application to include all engines being produced.

(7) Take any action that otherwise circumvents the intent of the Act or this part.

(d) We may void your certificate if you do not keep the records we require or do not give us information as required under this part or the Act.

(e) We may void your certificate if we find that you intentionally submitted false or incomplete information.

(f) If we deny your application or suspend, revoke, or void your certificate, you may ask for a hearing (see § 1048.820).

[70 FR 40474, July 13, 2005, as amended at 73 FR 59236, Oct. 8, 2008; 75 FR 23022, Apr. 30, 2010]

Subpart D—Testing Production-line Engines

§ 1048.301 When must I test my production-line engines?

(a) If you produce engines that are subject to the requirements of this part, you must test them as described in this subpart, except as follows:

(1) [Reserved]

(2) We may exempt engine families with a projected U.S.-directed production volume below 150 units from routine testing under this subpart. Request this exemption in your application for certification and include your basis for projecting a production volume below 150 units. We will approve your request if we agree that you have made good-faith estimates of your production volumes. Your exemption is approved when we grant your certificate. You must promptly notify us if your actual production exceeds 150 units during the model year. If you exceed the production limit or if there is evidence of a nonconformity, we may require you to test production-line engines under this subpart, or under 40 CFR part 1068, subpart E, even if we have approved an exemption under this paragraph (a)(2).

(b) We may suspend or revoke your certificate of conformity for certain engine families if your production-line engines do not meet the requirements of this part or you do not fulfill your obligations under this subpart (see §§ 1048.325 and 1048.340).

(c) Other regulatory provisions authorize us to suspend, revoke, or void your certificate of conformity, or order recalls for engine families, without regard to whether they have passed these production-line testing requirements. The requirements of this subpart do not affect our ability to do selective enforcement audits, as described in part 1068 of this chapter. Individual engines in families that pass these production-line testing requirements must also conform to all applicable regulations of this part and part 1068 of this chapter.

(d) You may use alternate programs for testing production-line engines in the following circumstances:

(1) You may use analyzers and sampling systems that meet the field-testing requirements of 40 CFR part 1065, subpart J, but not the otherwise applicable requirements in 40 CFR part 1065 for laboratory testing, to demonstrate compliance with duty-cycle emission standards if you double the minimum sampling rate specified in § 1048.310(b). Use measured test results to determine whether engines comply with applicable standards without applying a measurement allowance. This alternate program does not require prior approval but we may disallow use of this option where we determine that use of field-grade equipment would prevent you from being able to demonstrate that your engines are being produced to conform to the specifications in your application for certification.

(2) You may ask to use another alternate program for testing production-line engines. In your request, you must show us that the alternate program gives equal assurance that your products meet the requirements of this part. We may waive some or all of this subpart's requirements if we approve your alternate approach. For example, in certain circumstances you may be able to give us equal assurance that your products meet the requirements of this part by using less rigorous measurement methods if you offset that by increasing the number of test engines.

(e) If you certify an engine family with carryover emission data, as described in § 1048.235(d), and these equivalent engine families consistently pass the production-line testing requirements over the preceding two-year period, you may ask for a reduced testing rate for further production-line testing for that family. The minimum testing rate is one engine per engine family. If we reduce your testing rate, we may limit our approval to any number of model years. In determining whether to approve your request, we may consider the number of engines that have failed the emission tests.

(f) We may ask you to make a reasonable number of production-line engines available for a reasonable time so we can test or inspect them for compliance with the requirements of this part.

[73 FR 59236, Oct. 8, 2008]

§ 1048.305 How must I prepare and test my production-line engines?

This section describes how to prepare and test production-line engines. You must assemble the test engine in a way that represents the assembly procedures for other engines in the engine family. You must ask us to approve any deviations from your normal assembly procedures for other production engines in the engine family.

(a) *Test procedures.* Test your production-line engines using either the steady-state or transient testing procedures specified in subpart F of this part to show you meet the duty-cycle emission standards in subpart B of this part. The field-testing standards apply for this testing, but you need not do additional testing to show that production-line engines meet the field-testing standards.

(b) *Modifying a test engine.* Once an engine is selected for testing (see § 1048.310), you may adjust, repair, prepare, or modify it or check its emissions only if one of the following is true:

(1) You document the need for doing so in your procedures for assembling and inspecting all your production engines and make the action routine for all the engines in the engine family.

(2) This subpart otherwise specifically allows your action.

(3) We approve your action in advance.

(c) *Engine malfunction.* If an engine malfunction prevents further emission testing, ask us to approve your decision to either repair the engine or delete it from the test sequence.

(d) *Setting adjustable parameters.* Before any test, we may require you to adjust any adjustable parameter to any setting within its physically adjustable range.

(1) We may require you to adjust idle speed outside the physically adjustable range as needed, but only until the engine has stabilized emission levels (see paragraph (e) of this section). We may ask you for information needed to establish an alternate minimum idle speed.

(2) We may specify adjustments within the physically adjustable range by considering their effect on emission levels. We may also consider how likely it is that someone will make such an adjustment with in-use equipment.

(e) *Stabilizing emission levels.* Before you test production-line engines, you may operate the engine to stabilize the emission levels. Using good engineering judgment, operate your engines in a way that represents the way production engines will be used. You may operate each engine for no more than the greater of two periods:

(1) 50 hours.

(2) The number of hours you operated your emission-data engine for certifying the engine family (see 40 CFR part 1065, subpart E).

(f) *Damage during shipment.* If shipping an engine to a remote facility for production-line testing makes necessary an adjustment or repair, you must wait until after the initial emission test to do this work. We may waive this requirement if the test would be impossible or unsafe, or if it would permanently damage the engine. Report to us, in your written report under § 1048.345, all adjustments or repairs you make on test engines before each test.

(g) *Retesting after invalid tests.* You may retest an engine if you determine an emission test is invalid under subpart F of this part. Explain in your written report reasons for invalidating any test and the emission results from

all tests. If we determine that you improperly invalidated a test, we may require you to ask for our approval for future testing before substituting results of the new tests for invalid ones.

[67 FR 68347, Nov. 8, 2002, as amended at 70 FR 40475, July 13, 2005; 73 FR 59237, Oct. 8, 2008]

§ 1048.310 How must I select engines for production-line testing?

(a) Use test results from two engines each quarter to calculate the required sample size for the model year for each engine family.

(b) Early in each calendar quarter, randomly select and test two engines from the end of the assembly line for each engine family.

(c) Calculate the required sample size for each engine family. Separately calculate this figure for $HC+NO_X$ and CO. The required sample size is the greater of these calculated values. Use the following equation:

$$N = \left[\frac{(t_{95} \cdot \sigma)}{(x - STD)} \right]^2 + 1$$

Where:

N = Required sample size for the model year.

t_{95} = 95% confidence coefficient, which depends on the number of tests completed, n, as specified in the table in paragraph (c)(1) of this section. It defines 95% confidence intervals for a one-tail distribution.

σ = Test sample standard deviation (see paragraph (c)(2) of this section).

x = Mean of emission test results of the sample.

STD = Emission standard.

(1) Determine the 95% confidence coefficient, t_{95}, from the following table:

n	t_{95}	n	t_{95}	n	t_{95}
2	6.31	12	1.80	22	1.72
3	2.92	13	1.78	23	1.72
4	2.35	14	1.77	24	1.71
5	2.13	15	1.76	25	1.71
6	2.02	16	1.75	26	1.71
7	1.94	17	1.75	27	1.71
8	1.90	18	1.74	28	1.70
9	1.86	19	1.73	29	1.70
10	1.83	20	1.73	30+	1.70
11	1.81	21	1.72		

(2) Calculate the standard deviation, σ, for the test sample using the following formula:

Where:

$$\sigma = \left[\sum \frac{(X_i - x)^2}{(n-1)} \right]^{\frac{1}{2}}$$

X_i = Emission test result for an individual engine.

n = The number of tests completed in an engine family.

(d) Use final deteriorated test results to calculate the variables in the equations in paragraph (c) of this section (see § 1048.315(a)).

(e) After each new test, recalculate the required sample size using the updated mean values, standard deviations, and the appropriate 95-percent confidence coefficient.

(f) Distribute the remaining tests evenly throughout the rest of the year. You may need to adjust your schedule for selecting engines if the required sample size changes. If your scheduled quarterly testing for the remainder of the model year is sufficient to meet the calculated sample size, you may wait until the next quarter to do additional testing. Continue to randomly select engines from each engine family.

(g) Continue testing until one of the following things happens:

(1) After completing the minimum number of tests required in paragraph (b) of this section, the number of tests completed in an engine family, n, is greater than the required sample size, N, and the sample mean, x, is less than or equal to the emission standard. For example, if N = 5.1 after the fifth test, the sample-size calculation does not allow you to stop testing.

(2) The engine family does not comply according to § 1048.315.

(3) You test 30 engines from the engine family.

(4) You test one percent of your projected annual U.S.-directed production volume for the engine family, rounded to the nearest whole number. Do not count an engine under this paragraph (g)(4) if it fails to meet an applicable emission standard. You may stop testing after you test one percent of your production volume even if you have not tested the number of engines specified in paragraph (b) of this section. For example, if projected volume is 475 engines, test two engines in each of the first two quarters and one engine in the third quarter to fulfill your testing requirements under this section for that engine family.

(5) You choose to declare that the engine family does not comply with the requirements of this subpart.

(h) If the sample-size calculation allows you to stop testing for one pollutant but not another, you must continue measuring emission levels of all pollutants for any additional tests required under this section. However, you need not continue making the calculations specified in this subpart for the pollutant for which testing is not required. This paragraph (h) does not affect the number of tests required under this section, the required calculations in § 1048.315, or the remedial steps required under § 1048.320.

(i) You may elect to test more randomly chosen engines than we require under this section. Include these engines in the sample-size calculations.

[67 FR 68347, Nov. 8, 2002, as amended at 70 FR 40475, July 13, 2005; 73 FR 59237, Oct. 8, 2008]

§ 1048.315 How do I know when my engine family fails the production-line testing requirements?

This section describes the pass/fail criteria for the production-line testing requirements. We apply these criteria on an engine-family basis. See § 1048.320 for the requirements that apply to individual engines that fail a production-line test.

(a) Calculate your test results as follows:

(1) *Initial and final test results.* Calculate and round the test results for each engine. If you do several tests on an engine, calculate the initial results for each test, then add all the test results together and divide by the number of tests. Round this final calculated value for the final test results on that engine.

(2) *Final deteriorated test results.* Apply the deterioration factor for the engine family to the final test results (see § 1048.240(c)).

(3) *Round deteriorated test results.* Round the results to the number of decimal places in the emission standard expressed to one more decimal place.

(b) Construct the following CumSum Equation for each engine family for $HC+NO_X$ and CO emissions:

$$C_i = \text{Max}\ [0 \text{ or } C_{i-1} + X_i - (STD + 0.25 \times \sigma)]$$

Where:

C_i = The current CumSum statistic.

C_i-1 = The previous CumSum statistic. For the first test, the CumSum statistic is 0 (*i.e.*, $C_1 = 0$).

X_i = The current emission test result for an individual engine.

STD = Emission standard.

(c) Use final deteriorated test results to calculate the variables in the equation in paragraph (b) of this section (see § 1048.315(a)).

(d) After each new test, recalculate the CumSum statistic.

(e) If you test more than the required number of engines, include the results from these additional tests in the CumSum Equation.

(f) After each test, compare the current CumSum statistic, C_i, to the recalculated Action Limit, H, defined as $H = 5.0 \times \sigma$.

(g) If the CumSum statistic exceeds the Action Limit in two consecutive

tests, the engine family fails the production-line testing requirements of this subpart. Tell us within ten working days if this happens.

(h) If you amend the application for certification for an engine family (see § 1048.225), do not change any previous calculations of sample size or CumSum statistics for the model year.

[67 FR 68347, Nov. 8, 2002, as amended at 70 FR 40475, July 13, 2005; 73 FR 59238, Oct. 8, 2008]

§ 1048.320 What happens if one of my production-line engines fails to meet emission standards?

If you have a production-line engine with final deteriorated test results exceeding one or more emission standards (see § 1048.315(a)), the certificate of conformity is automatically suspended for that failing engine. You must take the following actions before your certificate of conformity can cover that engine:

(a) Correct the problem and retest the engine to show it complies with all emission standards.

(b) Include the test results and describe the remedy for each engine in the written report required under § 1048.345.

[67 FR 68347, Nov. 8, 2002, as amended at 73 FR 59238, Oct. 8, 2008]

§ 1048.325 What happens if an engine family fails the production-line testing requirements?

(a) We may suspend your certificate of conformity for an engine family if it fails under § 1048.315. The suspension may apply to all facilities producing engines from an engine family, even if you find noncompliant engines only at one facility.

(b) We will tell you in writing if we suspend your certificate in whole or in part. We will not suspend a certificate until at least 15 days after the engine family fails. The suspension is effective when you receive our notice.

(c) Up to 15 days after we suspend the certificate for an engine family, you may ask for a hearing (see § 1048.820). If we agree before a hearing occurs that we used erroneous information in deciding to suspend the certificate, we will reinstate the certificate.

(d) Section 1048.335 specifies steps you must take to remedy the cause of the engine family's production-line failure. All the engines you have produced since the end of the last test period are presumed noncompliant and should be addressed in your proposed remedy. We may require you to apply the remedy to engines produced earlier if we determine that the cause of the failure is likely to have affected the earlier engines.

[67 FR 68347, Nov. 8, 2002, as amended at 70 FR 40475, July 13, 2005; 73 FR 59238, Oct. 8, 2008]

§ 1048.330 May I sell engines from an engine family with a suspended certificate of conformity?

You may sell engines that you produce after we suspend the engine family's certificate of conformity under § 1048.315 only if one of the following occurs:

(a) You test each engine you produce and show it complies with emission standards that apply.

(b) We conditionally reinstate the certificate for the engine family. We may do so if you agree to recall all the affected engines and remedy any noncompliance at no expense to the owner if later testing shows that the engine family still does not comply.

§ 1048.335 How do I ask EPA to reinstate my suspended certificate?

(a) Send us a written report asking us to reinstate your suspended certificate. In your report, identify the reason for noncompliance, propose a remedy for the engine family, and commit to a date for carrying it out. In your proposed remedy include any quality control measures you propose to keep the problem from happening again.

(b) Give us data from production-line testing that shows the remedied engine family complies with all the emission standards that apply.

§ 1048.340 When may EPA revoke my certificate under this subpart and how may I sell these engines again?

(a) We may revoke your certificate for an engine family in the following cases:

(1) You do not meet the reporting requirements.

(2) Your engine family fails to comply with the requirements of this subpart and your proposed remedy to address a suspended certificate under § 1048.325 is inadequate to solve the problem or requires you to change the engine's design or emission-control system.

(b) To sell engines from an engine family with a revoked certificate of conformity, you must modify the engine family and then show it complies with the requirements of this part.

(1) If we determine your proposed design change may not control emissions for the engine's full useful life, we will tell you within five working days after receiving your report. In this case we will decide whether production-line testing will be enough for us to evaluate the change or whether you need to do more testing.

(2) Unless we require more testing, you may show compliance by testing production-line engines as described in this subpart.

(3) We will issue a new or updated certificate of conformity when you have met these requirements.

§ 1048.345 What production-line testing records must I send to EPA?

(a) Within 30 calendar days of the end of each calendar quarter, send us a report with the following information:

(1) Describe any facility used to test production-line engines and state its location.

(2) State the total U.S.-directed production volume and number of tests for each engine family.

(3) Describe how you randomly selected engines.

(4) Describe each test engine, including the engine family's identification and the engine's model year, build date, model number, identification number, and number of hours of operation before testing.

(5) Identify how you accumulated hours of operation on the engines and describe the procedure and schedule you used.

(6) Provide the test number; the date, time and duration of testing; test procedure; all initial test results; final test results; and final deteriorated test results for all tests. Provide the emission results for all measured pollutants. Include information for both valid and invalid tests and the reason for any invalidation.

(7) Describe completely and justify any nonroutine adjustment, modification, repair, preparation, maintenance, or test for the test engine if you did not report it separately under this subpart. Include the results of any emission measurements, regardless of the procedure or type of equipment.

(8) Provide the CumSum analysis required in § 1048.315 and the sample-size calculation required in § 1048.310 for each engine family.

(9) Report on each failed engine as described in § 1048.320.

(10) State the date the calendar quarter ended for each engine family.

(b) We may ask you to add information to your written report, so we can determine whether your new engines conform with the requirements of this subpart. We may also ask you to send less information.

(c) An authorized representative of your company must sign the following statement:

> We submit this report under Sections 208 and 213 of the Clean Air Act. Our production-line testing conformed completely with the requirements of 40 CFR part 1048. We have not changed production processes or quality-control procedures for test engines in a way that might affect emission controls. All the information in this report is true and accurate, to the best of my knowledge. I know of the penalties for violating the Clean Air Act and the regulations. (Authorized Company Representative)

(d) Send electronic reports of production-line testing to the Designated Compliance Officer using an approved information format. If you want to use a different format, send us a written request with justification for a waiver.

(e) We will send copies of your reports to anyone from the public who asks for them. See § 1048.815 for information on how we treat information you consider confidential.

[67 FR 68347, Nov. 8, 2002, as amended at 70 FR 40476, July 13, 2005; 73 FR 59238, Oct. 8, 2008]

§ 1048.350 What records must I keep?

(a) Organize and maintain your records as described in this section. We may review your records at any time.

(b) Keep paper or electronic records of your production-line testing for eight years after you complete all the testing required for an engine family in a model year.

(c) Keep a copy of the written reports described in § 1048.345.

(d) Keep the following additional records:

(1) A description of all test equipment for each test cell that you can use to test production-line engines.

(2) The names of supervisors involved in each test.

(3) The name of anyone who authorizes adjusting, repairing, preparing, or modifying a test engine and the names of all supervisors who oversee this work.

(4) If you shipped the engine for testing, the date you shipped it, the associated storage or port facility, and the date the engine arrived at the testing facility.

(5) Any records related to your production-line tests that are not in the written report.

(6) A brief description of any significant events during testing not otherwise described in the written report or in this section.

(7) Any information specified in § 1048.345 that you do not include in your written reports.

(e) If we ask, you must give us projected or actual production figures for an engine family. We may ask you to divide your production figures by maximum engine power, displacement, fuel type, or assembly plant (if you produce engines at more than one plant).

(f) Keep records of the engine identification number for each engine you produce under each certificate of conformity. You may identify these numbers as a range. Give us these records within 30 days if we ask for them.

(g) We may ask you to keep or send other information necessary to implement this subpart.

[67 FR 68347, Nov. 8, 2002, as amended at 70 FR 40476, July 13, 2005; 73 FR 59239, Oct. 8, 2008]

Subpart E—Testing In-use Engines

§ 1048.401 What testing requirements apply to my engines that have gone into service?

(a) If you produce engines that are subject to the requirements of this part, you must test them as described in this subpart. This generally involves testing engines in the field or removing them for measurement in a laboratory.

(b) We may approve an alternate plan for showing that in-use engines comply with the requirements of this part if one of the following is true:

(1) You produce 200 or fewer engines per year in the selected engine family.

(2) Removing the engine from most of the applications for that engine family causes significant, irreparable damage to the equipment.

(3) You identify a unique aspect of your engine applications that keeps you from doing the required in-use testing.

(c) We may void your certificate of conformity for an engine family if you do not meet your obligations under this part.

(d) Independent of your responsibility to test in-use engines, we may choose at any time to do our own testing of your in-use engines.

(e) If in-use testing shows that engines fail to meet emission standards or other requirements of this part, we may pursue a recall or other remedy as allowed by the Act (see § 1048.415).

§ 1048.405 How does this program work?

(a) You must test in-use engines, for exhaust emissions, from the families we select. We may select up to 25 percent of your engine families in any model year—or one engine family if you have three or fewer families. We will select engine families for testing before the end of the model year. When we select an engine family for testing, we may specify that you preferentially test engines based on fuel type or equipment type. In addition, we may identify specific modes of operation or sampling times. You may choose to test additional engine families that we do not select.

(b) Send us an in-use testing plan within six months after we direct you

to test a particular engine family. If we request additional information or require you to modify your plan to meet the requirements of this subpart, you must provide the information or the modified plan within 30 days of our request. Complete the testing within 36 months after we direct you to test a particular engine family.

(c) You may need to test engines from more than one model year at a given time.

(d) In appropriate extreme and unusual circumstances that are clearly outside your control and could not have been avoided by the exercise of prudence, diligence, and due care, we may allow more time to complete testing or we may waive the in-use testing requirement for an engine family. For example, if your test fleet is destroyed by severe weather during service accumulation and we agree that completion of testing is not possible, we would generally waive testing requirements for that engine family.

[67 FR 68347, Nov. 8, 2002, as amended at 73 FR 59239, Oct. 8, 2008; 75 FR 23022, Apr. 30, 2010]

§ 1048.410 How must I select, prepare, and test my in-use engines?

(a) You may make arrangements to select representative test engines from your own fleet or from other independent sources.

(b) For the selected engine families, select engines that you or your customers have—

(1) Operated for at least 50 percent of the engine family's useful life (see § 1048.101(d));

(2) Not maintained or used in an abnormal way; and

(3) Documented in terms of total hours of operation, maintenance, operating conditions, and storage.

(c) Use the following methods to determine the number of engines you must test in each engine family:

(1) Test at least two engines if you produce 2,000 or fewer engines in the model year from all engine families, or if you produce 500 or fewer engines from the selected engine family. Otherwise, test at least four engines.

(2) If you successfully complete an in-use test program on an engine family and later certify an equivalent engine family with carryover emission data, as described in § 1048.235(c), then test at least one engine instead of the testing rates in paragraph (c)(1) of this section.

(3) If you test the minimum required number of engines and all comply fully with emission standards, you may stop testing.

(4) For each engine that fails any applicable standard, test two more. Regardless of measured emission levels, you do not have to test more than ten engines in an engine family. You may do more tests than we require.

(5) You may concede that the engine family does not comply before testing a total of ten engines.

(d) You may do minimal maintenance to set components of a test engine to specifications for anything we do not consider an adjustable parameter (see § 1048.205(p)). Limit maintenance to what is in the owner's instructions for engines with that amount of service and age. Document all maintenance and adjustments.

(e) You may do repeat measurements with a test engine; however, you must conduct the same number of tests on each engine.

(f) For a test program on an engine family, choose one of the following methods to test your engines:

(1) Remove the selected engines for testing in a laboratory. Use the applicable steady-state and transient procedures in subpart F of this part to show compliance with the duty-cycle standards in § 1048.101(a) and (b). We may direct you to measure emissions on the dynamometer using the supplemental test procedures in § 1048.515 to show compliance with the field-testing standards in § 1048.101(c).

(2) Test the selected engines while they remain installed in the equipment. Use the field testing procedures in subpart F of this part. Measure emissions during normal operation of the equipment to show compliance with the field-testing standards in § 1048.101(c). We may direct you to include specific areas of normal operation.

(g) You may ask us to waive parts of the prescribed test procedures if they are not necessary to determine in-use compliance.

(h) Calculate the average emission levels for an engine family from the results for the set of tested engines. Round them to the number of decimal places in the emission standards expressed to one more decimal place.

[67 FR 68347, Nov. 8, 2002, as amended at 73 FR 59239, Oct. 8, 2008]

§ 1048.415 What happens if in-use engines do not meet requirements?

(a) Determine the reason each in-use engine exceeds the emission standards.

(b) If the average emission levels calculated in § 1048.410(h) exceed any of the emission standards that apply, notify us within fifteen days of completing testing on this family. Otherwise follow the reporting instructions in § 1048.420.

(c) We will consider failure rates, average emission levels, and any defects—among other things—to decide on taking remedial action under this subpart (see 40 CFR 1068.505). We may consider the results from any voluntary additional testing you perform. We may also consider information related to testing from other engine families showing that you designed them to exceed the minimum requirements for controlling emissions. We may order a recall before or after you complete testing of an engine family if we determine a substantial number of engines do not conform to section 213 of the Act or to this part. The scope of the recall may include other engine families in the same or different model years if the cause of the problem identified in paragraph (a) of this section applies more broadly than the tested engine family, as allowed by the Act.

(d) If in-use testing reveals a design or manufacturing defect that prevents engines from meeting the requirements of this part, you must correct the defect as soon as possible for any future production for engines in every family affected by the defect. See 40 CFR 1068.501 for additional requirements related to defect reporting.

(e) You may voluntarily recall an engine family for emission failures, as described in 40 CFR 1068.535, unless we have ordered a recall for that family under 40 CFR 1068.505.

(f) You have the right to a hearing before we order you to recall your engines or implement an alternative remedy (see § 1048.820).

[67 FR 68347, Nov. 8, 2002, as amended at 73 FR 59239, Oct. 8, 2008]

§ 1048.420 What in-use testing information must I report to EPA?

(a) In a report to us within three months after you finish testing an engine family, do all the following:

(1) Identify the engine family, model, serial number, and date of manufacture.

(2) For each engine inspected or considered for testing, identify whether the diagnostic system was functioning.

(3) Describe the specific reasons for disqualifying any engines for not being properly maintained or used.

(4) For each engine selected for testing, include the following information:

(i) Estimate the hours each engine was used before testing.

(ii) Describe all maintenance, adjustments, modifications, and repairs to each test engine.

(5) State the date and time of each test attempt.

(6) Include the results of all emission testing, including incomplete or invalidated tests, if any.

(b) Send electronic reports of in-use testing to the Designated Compliance Officer using an approved information format. If you want to use a different format, send us a written request with justification for a waiver.

(c) We will send copies of your reports to anyone from the public who asks for them. See § 1048.815 for information on how we treat information you consider confidential.

(d) We may ask for more information.

[67 FR 68347, Nov. 8, 2002, as amended at 70 FR 40476, July 13, 2005]

§ 1048.425 What records must I keep?

(a) Organize and maintain your records as described in this section. We may review your records at any time.

(b) Keep paper records of your in-use testing for one full year after you complete all the testing required for an engine family in a model year. You may use any additional storage formats or media if you like.

(c) Keep a copy of the written reports described in § 1048.420.

(d) Keep any additional records related to the procurement process.

[67 FR 68347, Nov. 8, 2002, as amended at 70 FR 40476, July 13, 2005]

Subpart F—Test Procedures

§ 1048.501 How do I run a valid emission test?

(a) Use the equipment and procedures for spark-ignition engines in 40 CFR part 1065 to determine whether engines meet the duty-cycle emission standards in § 1048.101(a) and (b). Measure the emissions of all the pollutants we regulate in § 1048.101 using the sampling procedures specified in 40 CFR part 1065. Measure CO_2, N_2O, and CH_4 as described in § 1048.235. Use the applicable duty cycles specified in §§ 1048.505 and 1048.510.

(b) Section 1048.515 describes the supplemental procedures for evaluating whether engines meet the field-testing emission standards in § 1048.101(c).

(c) Use the fuels and lubricants specified in 40 CFR part 1065, subpart H, to perform valid tests for all the testing we require in this part, except as noted in § 1048.515. For service accumulation, use the test fuel or any commercially available fuel that is representative of the fuel that in-use engines will use.

(d) In place of the provisions of 40 CFR 1065.405, you may consider emission levels stable without measurement after 50 hours of engine operation.

(e) To test engines for evaporative emissions, use the equipment and procedures specified for testing diurnal emissions as described in 40 CFR 1060.525, subject to the following provisions:

(1) Precondition nonmetal fuel tanks as specified in 40 CFR 1060.520(a) and (b).

(2) For engines equipped with carbon canisters that store fuel vapors that will be purged for combustion in the engine, precondition the canister as specified in 40 CFR 86.132–96(h) and then operate the engine for 60 minutes over repeat runs of the duty cycle specified in Appendix I of this part.

(3) Start the diurnal emission test after the engine is stabilized at room temperatures, but within 36 hours after the engine operation specified in paragraph (e)(2) of this section.

(4) You may not separately measure permeation emissions from nonmetal fuel tanks for subtracting from the diurnal emission measurement.

(5) Note that you may omit testing for evaporative emissions during certification if you certify by design, as specified in § 1048.245.

(f) You may use special or alternate procedures to the extent we allow them under 40 CFR 1065.10.

(g) This subpart is addressed to you as a manufacturer, but it applies equally to anyone who does testing for you, and to us when we perform testing to determine if your engines meet emission standards.

[70 FR 40476, July 13, 2005, as amended at 73 FR 59239, Oct. 8, 2008; 74 FR 56510, Oct. 30, 2009]

§ 1048.505 How do I test engines using steady-state duty cycles, including ramped-modal testing?

This section describes how to test engines under steady-state conditions. In some cases, we allow you to choose the appropriate steady-state duty cycle for an engine. In these cases, you must use the duty cycle you select in your application for certification for all testing you perform for that engine family. If we test your engines to confirm that they meet emission standards, we will use the duty cycles you select for your own testing. We may also perform other testing as allowed by the Clean Air Act.

(a) You may perform steady-state testing with either discrete-mode or ramped-modal cycles, as follows:

(1) For discrete-mode testing, sample emissions separately for each mode, then calculate an average emission level for the whole cycle using the weighting factors specified for each mode. Calculate cycle statistics and compare with the established criteria as specified in 40 CFR 1065.514 to confirm that the test is valid. Operate the engine and sampling system as follows:

(i) *Engines with lean NO_X aftertreatment.* For lean-burn engines that depend on aftertreatment to meet the NO_X emission standard, operate the engine for 5–6 minutes, then sample

emissions for 1–3 minutes in each mode.

(ii) *Engines without lean NO_x aftertreatment.* For other engines, operate the engine for at least 5 minutes, then sample emissions for at least 1 minute in each mode.

(2) For ramped-modal testing, start sampling at the beginning of the first mode and continue sampling until the end of the last mode. Calculate emissions and cycle statistics the same as for transient testing as specified in 40 CFR part 1065, subpart G.

(b) Measure emissions by testing the engine on a dynamometer with one or more of the following sets of duty cycles to determine whether it meets the steady-state emission standards in § 1048.101(b):

(1) For engines from an engine family that will be used only in variable-speed applications, use one of the following duty cycles:

(i) The following duty cycle applies for discrete-mode testing:

TABLE 1 OF § 1048.505

C2 mode No.	Engine speed [1]	Torque (percent) [2]	Weighting factors
1	Maximum test speed	25	0.06
2	Intermediate test	100	0.02
3	Intermediate test	75	0.05
4	Intermediate test	50	0.32
5	Intermediate test	25	0.30
6	Intermediate test	10	0.10
7	Warm idle	0	0.15

[1] Speed terms are defined in 40 CFR part 1065.
[2] The percent torque is relative to the maximum torque at the given engine speed.

(ii) The following duty cycle applies for ramped-modal testing:

TABLE 2 OF § 1048.505

RMC mode	Time in mode (seconds)	Engine speed [1,2]	Torque (percent) [2,3]
1a Steady-state	119	Warm idle	0
1b Transition	20	Linear transition	Linear transition.
2a Steady-state	29	Intermediate speed	100
2b Transition	20	Intermediate speed	Linear transition.
3a Steady-state	150	Intermediate speed	10
3b Transition	20	Intermediate speed	Linear transition.
4a Steady-state	80	Intermediate speed	75
4b Transition	20	Intermediate speed	Linear transition.
5a Steady-state	513	Intermediate speed	25
5b Transition	20	Intermediate speed	Linear transition.
6a Steady-state	549	Intermediate speed	50
6b Transition	20	Linear transition	Linear transition.
7a Steady-state	96	Maximum test speed	25
7b Transition	20	Linear transition	Linear transition.
8 Steady-state	124	Warm idle	0

[1] Speed terms are defined in 40 CFR part 1065.
[2] Advance from one mode to the next within a 20-second transition phase. During the transition phase, command a linear progression from the torque setting of the current mode to the torque setting of the next mode.
[3] The percent torque is relative to maximum torque at the commanded engine speed.

(2) For engines from an engine family that will be used only at a single, rated speed, use the 5-mode duty cycle or the corresponding ramped-modal cycle described in 40 CFR part 1039, Appendix II, paragraph (a).

(3) Use a duty cycle from both paragraphs (b)(1) and (b)(2) of this section if you will not restrict an engine family to constant-speed or variable-speed applications.

(4) Use a duty cycle specified in paragraph (b)(2) of this section for all severe-duty engines.

(5) For high-load engines, use one of the following duty cycles:

(i) The following duty cycle applies for discrete-mode testing:

TABLE 3 OF § 1048.505

Mode No.	Engine speed	Torque (percent) [1]	Minimum time in mode (minutes)	Weighting factors
1	Maximum test speed	100	3.0	0.50
2	Maximum test speed	75	3.0	0.50

[1] The percent torque is relative to the maximum torque at maximum test speed.

(ii) The following duty cycle applies for discrete-mode testing:

TABLE 4 OF § 1048.505

RMC modes	Time in mode (seconds)	Engine speed (percent)	Torque (percent) [1, 2]
1a Steady-state	290	Engine governed	100
1b Transition	20	Engine governed	Linear transition.
2 Steady-state	290	Engine governed	75

[1] The percent torque is relative to maximum test torque.
[2] Advance from one mode to the next within a 20-second transition phase. During the transition phase, command a linear progression from the torque setting of the current mode to the torque setting of the next mode.

(c) If we test an engine to confirm that it meets the duty-cycle emission standards, we will use the steady-state duty cycles that apply for that engine family.

(d) During idle mode, operate the engine at its warm idle speed as described in 40 CFR 1065.510.

(e) For full-load operating modes, operate the engine at wide-open throttle.

(f) See 40 CFR part 1065 for detailed specifications of tolerances and calculations.

(g) For those cases where steady-state testing does not directly follow a transient test, perform the steady-state test according to this section after an appropriate warm-up period, consistent with 40 CFR part 1065, subpart F.

[73 FR 59239, Oct 8, 2008, as amended at 75 FR 23022, Apr. 30, 2010]

§ 1048.510 What transient duty cycles apply for laboratory testing?

(a) Starting with the 2007 model year, measure emissions by testing the engine on a dynamometer with the duty cycle described in Appendix II to determine whether it meets the transient emission standards in § 1048.101(a).

(b) Calculate cycle statistics and compare with the established criteria as specified in 40 CFR 1065.514 to confirm that the test is valid.

(c) Warm up the test engine as follows before running a transient test:

(1) Operate the engine for the first 180 seconds of the appropriate duty cycle, then allow it to idle without load for 30 seconds. At the end of the 30-second idling period, start measuring emissions as the engine operates over the prescribed duty cycle. For severe-duty engines, this engine warm-up procedure may include up to 15 minutes of operation over the appropriate duty cycle.

(2) If the engine was already operating before a test, use good engineering judgment to let the engine cool down enough so measured emissions during the next test will accurately represent those from an engine starting at room temperature. For example, if an engine starting at room temperature warms up enough in three minutes to start closed-loop operation and achieve full catalyst activity, then minimal engine cooling is necessary before starting the next test.

(3) You are not required to measure emissions while the engine is warming up. However, you must design your emission-control system to start working as soon as possible after engine

starting. In your application for certification, describe how your engine meets this objective (see § 1048.205(b)).

[67 FR 68347, Nov. 8, 2002, as amended at 70 FR 40478, July 13, 2005; 73 FR 59241, Oct. 8, 2008; 75 FR 23023, Apr. 30, 2010]

§ 1048.515 What are the field-testing procedures?

(a) This section describes the procedures to determine whether your engines meet the field-testing emission standards in § 1048.101(c). These procedures may include any normal engine operation and ambient conditions that the engines may experience in use. Paragraph (b) of this section defines the limits of what we will consider normal engine operation and ambient conditions. Use the test procedures we specify in § 1048.501, except for the provisions we specify in this section. Measure emissions with one of the following procedures:

(1) Remove the selected engines for testing in a laboratory. You may use an engine dynamometer to simulate normal operation, as described in this section.

(2) Test the selected engines while they remain installed in the equipment. In 40 CFR part 1065, subpart J, we describe the equipment and sampling methods for testing engines in the field. Use fuel meeting the specifications of 40 CFR part 1065, subpart H, or a fuel typical of what you would expect the engine to use in service.

(b) An engine's emissions may not exceed the levels we specify in § 1048.101(c) for any continuous sampling period of at least 120 seconds under the following ranges of operation and operating conditions:

(1) Engine operation during the emission sampling period may include any normal operation, subject to the following restrictions:

(i) Average power must be at least 5 percent of maximum brake power.

(ii) Continuous time at idle must not be greater than 120 seconds.

(iii) The sampling period may not begin until the engine has reached stable operating temperatures. For example, this would exclude engine operation after starting until the thermostat starts modulating coolant temperature.

(iv) The sampling period may not include engine starting.

(v) For engines that qualify for the alternate Tier 2 emission standards in § 1048.101(d), operation at 90 percent or more of maximum power must be less than 10 percent of the total sampling time. You may request our approval for a different power threshold.

(2) Engine testing may occur under any normal conditions without correcting measured emission levels, subject to the following restrictions:

(i) Barometric pressure must be between 80.0 and 103.3 kPa (600 and 775 mm Hg).

(ii) Ambient air temperature must be between 13° and 35 °C.

[67 FR 68347, Nov. 8, 2002, as amended at 70 FR 40478, July 13, 2005; 73 FR 59241, Oct. 8, 2008]

Subpart G—Compliance Provisions

§ 1048.601 What compliance provisions apply to these engines?

(a) Engine and equipment manufacturers, as well as owners, operators, and rebuilders of engines subject to the requirements of this part, and all other persons, must observe the provisions of this part, the requirements and prohibitions in 40 CFR part 1068, and the provisions of the Act.

(b) This paragraph (b) describes how the replacement-engine provisions of 40 CFR 1068.240 apply for engines subject to the requirements of this part in conjunction with the secondary engine manufacturer provisions in 40 CFR 1068.262. For cases in which the secondary engine manufacturer completes assembly of the engine, these provisions apply as written. If the secondary engine manufacturer arranges for a third party to complete engine assembly, the following additional provisions apply:

(1) The ultimate purchaser must purchase (or otherwise order) the replacement engine from the secondary engine manufacturer. The secondary engine manufacturer must provide assembly instructions to the engine assembler (unless the engine being replaced was not subject to emission standards). The secondary engine manufacturer may

arrange for the original engine manufacturer to ship the engine directly to the engine assembler. However, if the secondary engine manufacturer does not take possession of the engine, it must supply the engine label specified in 40 CFR 1068.240 to the engine assembler and the engine assembler must apply the label before shipping the engine.

(2) The secondary engine manufacturer and engine assembler are both responsible if the engine is installed in new equipment or otherwise violates the circumvention provisions of 40 CFR 1068.240.

(3) Consider the following example. A secondary engine manufacturer receiving a valid request for a replacement engine for which it does not already have an engine available in inventory may order a partially complete engine from an original engine manufacturer and have it shipped directly to an independent engine assembler. In this case, the secondary engine manufacturer must state in its order that the partially complete engine should be labeled as being exempt under 40 CFR 1068.240 and identify the engine assembler's address; the secondary engine manufacture must also provide instructions to the engine assembler. The original engine manufacturer would label the engine as described in 40 CFR 1068.262, identifying the replacement-engine exemption as the basis for shipping an uncertified engine, and ship the engine directly to the assembler. The engine assembler would complete the assembly by applying the label and otherwise following the instructions provided by the secondary engine manufacturer.

[73 FR 59241, Oct. 8, 2008]

§ 1048.605 What provisions apply to engines certified under the motor vehicle program?

(a) *General provisions.* If you are an engine manufacturer, this section allows you to introduce new nonroad engines into commerce if they are already certified to the requirements that apply to engines under 40 CFR parts 85 and 86 for the appropriate model year. If you comply with all the provisions of this section, we consider the certificate issued under 40 CFR part 86 for each engine to also be a valid certificate of conformity under this part 1048 for its model year, without a separate application for certification under the requirements of this part 1048. See § 1048.610 for similar provisions that apply to engines certified to chassis-based standards for motor vehicles.

(b) *Equipment-manufacturer provisions.* If you are not an engine manufacturer, you may produce nonroad equipment using motor-vehicle engines under this section as long as you meet all the requirements and conditions specified in paragraph (d) of this section. If you modify the motor-vehicle engine in any of the ways described in paragraph (d)(2) of this section, we will consider you a manufacturer of a new nonroad engine. Such engine modifications prevent you from using the provisions of this section.

(c) *Liability.* Engines for which you meet the requirements of this section are exempt from all the requirements and prohibitions of this part, except for those specified in this section. Engines exempted under this section must meet all the applicable requirements from 40 CFR parts 85 and 86. This applies to engine manufacturers, equipment manufacturers who use these engines, and all other persons as if these engines were used in a motor vehicle. The prohibited acts of 40 CFR 1068.101(a)(1) apply to these new engines and equipment; however, we consider the certificate issued under 40 CFR part 86 for each engine to also be a valid certificate of conformity under this part 1048 for its model year. If we make a determination that these engines do not conform to the regulations during their useful life, we may require you to recall them under 40 CFR part 86 or 40 CFR 1068.505.

(d) *Specific requirements.* If you are an engine manufacturer or equipment manufacturer and meet all the following criteria and requirements regarding your new nonroad engine, the engine is eligible for an exemption under this section:

(1) Your engine must be covered by a valid certificate of conformity issued under 40 CFR part 86.

(2) You must not make any changes to the certified engine that could reasonably be expected to increase its exhaust emissions for any pollutant, or its evaporative emissions. For example, if you make any of the following changes to one of these engines, you do not qualify for this exemption:

(i) Change any fuel system or evaporative system parameters from the certified configuration (this does not apply to refueling controls).

(ii) Change, remove, or fail to properly install any other component, element of design, or calibration specified in the engine manufacturer's application for certification. This includes aftertreatment devices and all related components.

(iii) Modify or design the engine cooling system so that temperatures or heat rejection rates are outside the original engine manufacturer's specified ranges.

(3) You must show that fewer than 50 percent of the engine family's total sales in the United States are used in nonroad applications. This includes engines used in any application without regard to which company manufactures the vehicle or equipment. Show this as follows:

(i) If you are the original manufacturer of the engine, base this showing on your sales information.

(ii) In all other cases, you must get the original manufacturer of the engine to confirm this based on its sales information.

(4) You must ensure that the engine has the label we require under 40 CFR part 86.

(5) You must add a permanent supplemental label to the engine in a position where it will remain clearly visible after installation in the equipment. In the supplemental label, do the following:

(i) Include the heading: ''NONROAD ENGINE EMISSION CONTROL INFORMATION''.

(ii) Include your full corporate name and trademark. You may instead include the full corporate name and trademark of another company you choose to designate.

(iii) State: ''THIS ENGINE WAS ADAPTED FOR NONROAD USE WITHOUT AFFECTING ITS EMISSION CONTROLS. THE EMISSION-CONTROL SYSTEM DEPENDS ON THE USE OF FUEL MEETING SPECIFICATIONS THAT APPLY FOR MOTOR-VEHICLE APPLICATIONS. OPERATING THE ENGINE ON OTHER FUELS MAY BE A VIOLATION OF FEDERAL LAW.''.

(iv) State the date you finished modifying the engine (month and year), if applicable.

(6) The original and supplemental labels must be readily visible after the engine is installed in the equipment or, if the equipment obscures the engine's emission control information label, the equipment manufacturer must attach duplicate labels, as described in 40 CFR 1068.105.

(7) Send the Designated Compliance Officer a signed letter by the end of each calendar year (or less often if we tell you) with all the following information:

(i) Identify your full corporate name, address, and telephone number.

(ii) List the engine or equipment models you expect to produce under this exemption in the coming year and describe your basis for meeting the sales restrictions of paragraph (d)(3) of this section.

(iii) State: ''We produce each listed [engine or equipment] model for nonroad application without making any changes that could increase its certified emission levels, as described in 40 CFR 1048.605.''.

(e) *Failure to comply*. If your engines do not meet the criteria listed in paragraph (d) of this section, they will be subject to the standards, requirements, and prohibitions of this part 1048 and the certificate issued under 40 CFR part 86 will not be deemed to also be a certificate issued under this part 1048. Introducing these engines into commerce without a valid exemption or certificate of conformity under this part violates the prohibitions in 40 CFR 1068.101(a)(1).

(f) *Data submission*. We may require you to send us emission test data on any applicable nonroad duty cycles.

(g) *Participation in averaging, banking and trading*. Engines adapted for nonroad use under this section may generate credits under the ABT provisions in 40 CFR part 86. These engines must use emission credits under 40

CFR part 86 if they are certified to an FEL that exceeds an applicable standard under 40 CFR part 86.

[70 FR 40479, July 13, 2005, as amended at 73 FR 59241, Oct. 8, 2008]

§ 1048.610 What provisions apply to vehicles certified under the motor vehicle program?

(a) *General provisions*. If you are a motor-vehicle manufacturer, this section allows you to introduce new nonroad engines or equipment into commerce if the vehicle is already certified to the requirements that apply under 40 CFR parts 85 and 86 for the appropriate model year. If you comply with all of the provisions of this section, we consider the certificate issued under 40 CFR part 86 for each motor vehicle to also be a valid certificate of conformity for the engine under this part 1048 for its model year, without a separate application for certification under the requirements of this part 1048. See § 1048.605 or similar provisions that apply to motor-vehicle engines produced for nonroad equipment. The provisions of this section do not apply to engines certified to meet the requirements for highway motorcycles.

(b) *Equipment-manufacturer provisions*. If you are not a motor-vehicle manufacturer, you may produce nonroad equipment from motor vehicles under this section as long as you meet all the requirements and conditions specified in paragraph (d) of this section. If you modify the motor vehicle or its engine in any of the ways described in paragraph (d)(2) of this section, we will consider you a manufacturer of a new nonroad engine. Such modifications prevent you from using the provisions of this section.

(c) *Liability*. Engines, vehicles, and equipment for which you meet the requirements of this section are exempt from all the requirements and prohibitions of this part, except for those specified in this section. Engines exempted under this section must meet all the applicable requirements from 40 CFR parts 85 and 86. This applies to engine manufacturers, equipment manufacturers, and all other persons as if the nonroad equipment were motor vehicles. The prohibited acts of 40 CFR 1068.101(a)(1) apply to these new pieces of equipment; however, we consider the certificate issued under 40 CFR part 86 for each motor vehicle to also be a valid certificate of conformity for the engine under this part 1048 for its model year. If we make a determination that these engines, vehicles, or equipment do not conform to the regulations during their useful life, we may require you to recall them under 40 CFR part 86 or 40 CFR 1068.505.

(d) *Specific requirements*. If you are a motor-vehicle manufacturer and meet all the following criteria and requirements regarding your new nonroad equipment and its engine, the engine is eligible for an exemption under this section:

(1) Your equipment must be covered by a valid certificate of conformity as a motor vehicle issued under 40 CFR part 86.

(2) You must not make any changes to the certified vehicle that we could reasonably expect to increase its exhaust emissions for any pollutant, or its evaporative emissions if it is subject to evaporative-emission standards. For example, if you make any of the following changes, you do not qualify for this exemption:

(i) Change any fuel system or evaporative system parameters from the certified configuration, including refueling emission controls.

(ii) Change, remove, or fail to properly install any other component, element of design, or calibration specified in the vehicle manufacturer's application for certification. This includes aftertreatment devices and all related components.

(iii) Modify or design the engine cooling system so that temperatures or heat rejection rates are outside the original vehicle manufacturer's specified ranges.

(iv) Add more than 500 pounds to the curb weight of the originally certified motor vehicle.

(3) You must show that fewer than 50 percent of the engine family's total sales in the United States are used in nonroad applications. This includes any type of vehicle, without regard to which company completes the manufacturing of the nonroad equipment. Show this as follows:

(i) If you are the original manufacturer of the vehicle, base this showing on your sales information.

(ii) In all other cases, you must get the original manufacturer of the vehicle to confirm this based on their sales information.

(4) The equipment must have the vehicle emission control information and fuel labels we require under 40 CFR 86.007–35.

(5) You must add a permanent supplemental label to the equipment in a position where it will remain clearly visible. In the supplemental label, do the following:

(i) Include the heading: ''NONROAD ENGINE EMISSION CONTROL INFORMATION''.

(ii) Include your full corporate name and trademark. You may instead include the full corporate name and trademark of another company you choose to designate.

(iii) State: ''THIS VEHICLE WAS ADAPTED FOR NONROAD USE WITHOUT AFFECTING ITS EMISSION CONTROLS. THE EMISSION-CONTROL SYSTEM DEPENDS ON THE USE OF FUEL MEETING SPECIFICATIONS THAT APPLY FOR MOTOR-VEHICLE APPLICATIONS. OPERATING THE ENGINE ON OTHER FUELS MAY BE A VIOLATION OF FEDERAL LAW.''.

(iv) State the date you finished modifying the vehicle (month and year), if applicable.

(6) The original and supplemental labels must be readily visible in the fully assembled equipment.

(7) Send the Designated Compliance Officer a signed letter by the end of each calendar year (or less often if we tell you) with all the following information:

(i) Identify your full corporate name, address, and telephone number.

(ii) List the equipment models you expect to produce under this exemption in the coming year and describe your basis for meeting the sales restrictions of paragraph (d)(3) of this section.

(ii) List the equipment models you expect to produce under this exemption in the coming year.

(iii) State: ''We produced each listed engine or equipment model for nonroad application without making any changes that could increase its certified emission levels, as described in 40 CFR 1048.610.''.

(e) *Failure to comply*. If your engines, vehicles, or equipment do not meet the criteria listed in paragraph (d) of this section, the engines will be subject to the standards, requirements, and prohibitions of this part 1048, and the certificate issued under 40 CFR part 86 will not be deemed to also be a certificate issued under this part 1048. Introducing these engines into commerce without a valid exemption or certificate of conformity under this part violates the prohibitions in 40 CFR 1068.101(a)(1).

(f) *Data submission*. We may require you to send us emission test data on any applicable nonroad duty cycles.

(g) *Participation in averaging, banking and trading*. Vehicles adapted for nonroad use under this section may generate credits under the ABT provisions in 40 CFR part 86. These vehicles must be included in the calculation of the applicable fleet average in 40 CFR part 86.

[70 FR 40480, July 13, 2005, as amended at 73 FR 59241, Oct. 8, 2008]

§ 1048.612 What is the exemption for delegated final assembly?

The provisions of 40 CFR 1068.261 related to delegated final assembly apply for engines certified under this part 1048, with the following exceptions and clarifications:

(a) The provisions related to reduced auditing rates in 40 CFR 1068.261(d)(3)(iii) apply starting with the 2014 model year.

(b) [Reserved]

[73 FR 59242, Oct. 8, 2008]

§ 1048.615 What are the provisions for exempting engines designed for lawn and garden applications?

This section is intended for engines designed for lawn and garden applications, but it applies to any engines meeting the criteria in paragraph (a) of this section.

(a) If an engine meets all the following criteria, it is exempt from the requirements of this part:

(1) The engine must have a nominal displacement of 1000 cc or less.

(2) The engine must have a maximum engine power at or below 30 kW.

(3) The engine must be in an engine family that has a valid certificate of conformity showing that it meets emission standards for Class II engines under 40 CFR part 90 or 1054 for the appropriate model year.

(b) The only requirements or prohibitions from this part that apply to an engine that meets the criteria in paragraph (a) of this section are in this section.

(c) If your engines do not meet the criteria listed in paragraph (a) of this section, they will be subject to the provisions of this part. Introducing these engines into commerce without a valid exemption or certificate of conformity violates the prohibitions in 40 CFR 1068.101.

(d) Engines exempted under this section are subject to all the requirements affecting engines under 40 CFR part 90 or 1054. The requirements and restrictions of 40 CFR part 90 or 1054 apply to anyone manufacturing these engines, anyone manufacturing equipment that uses these engines, and all other persons in the same manner as if these engines had a total maximum engine power at or below 19 kW.

[73 FR 59242, Oct. 8, 2008]

§ 1048.620 What are the provisions for exempting large engines fueled by natural gas or liquefied petroleum gas?

(a) If an engine meets all the following criteria, it is exempt from the requirements of this part:

(1) The engine must operate solely on natural gas or liquefied petroleum gas.

(2) The engine must have maximum engine power at or above 250 kW.

(3) The engine must be in an engine family that has a valid certificate of conformity showing that it meets emission standards for engines of that power rating under 40 CFR part 89 or 1039.

(b) The only requirements or prohibitions from this part that apply to an engine that is exempt under this section are in this section.

(c) If your engines do not meet the criteria listed in paragraph (a) of this section, they will be subject to the provisions of this part. Introducing these engines into commerce without a valid exemption or certificate of conformity violates the prohibitions in 40 CFR 1068.101.

(d) Engines exempted under this section are subject to all the requirements affecting engines under 40 CFR part 89 or 1039. The requirements and restrictions of 40 CFR part 89 or 1039 apply to anyone manufacturing these engines, anyone manufacturing equipment that uses these engines, and all other persons in the same manner as if these were nonroad diesel engines.

(e) You may request an exemption under this section by submitting an application for certification for the engines under 40 CFR part 89 or 1039.

[70 FR 40481, July 13, 2005]

§ 1048.625 What special provisions apply to engines using noncommercial fuels?

In § 1048.115(e), we generally require that engines meet emission standards for any adjustment within the full range of any adjustable parameters. For engines that use noncommercial fuels significantly different than the specified test fuel of the same type, you may ask to use the parameter-adjustment provisions of this section instead of those in § 1048.115(e). Engines certified under this section must be in a separate engine family.

(a) If we approve your request, the following provisions apply:

(1) You must certify the engine using the test fuel specified in § 1048.501.

(2) You may produce the engine without limits or stops that keep the engine adjusted within the certified range.

(3) You must specify in-use adjustments different than the adjustable settings appropriate for the specified test fuel, consistent with the provisions of paragraph (b)(1) of this section.

(b) To produce engines under this section, you must do the following:

(1) Specify in-use adjustments needed so the engine's level of emission control for each regulated pollutant is equivalent to that from the certified configuration.

(2) Add the following information to the emission control information label specified in § 1048.135:

(i) Include instructions describing how to adjust the engine to operate in

a way that maintains the effectiveness of the emission-control system.

(ii) State: ''THIS ENGINE IS CERTIFIED TO OPERATE IN APPLICATIONS USING NONCOMMERCIAL FUEL. MALADJUSTMENT OF THE ENGINE IS A VIOLATION OF FEDERAL LAW SUBJECT TO CIVIL PENALTY.''.

(3) Keep records to document the destinations and quantities of engines produced under this section.

[70 FR 40481, July 13, 2005]

§ 1048.630 What are the provisions for exempting engines used solely for competition?

We may grant you an exemption from the standards and requirements of this part for a new engine on the grounds that it is to be used solely for competition under the provisions of 40 CFR 1054.620. The requirements of this part do not apply to engines that we exempt for use solely for competition.

[73 FR 59242, Oct. 8, 2008]

§ 1048.635 What special provisions apply to branded engines?

The following provisions apply if you identify the name and trademark of another company instead of your own on your emission control information label, as provided by § 1048.135(c)(2):

(a) You must have a contractual agreement with the other company that obligates that company to take the following steps:

(1) Meet the emission warranty requirements that apply under § 1048.120. This may involve a separate agreement involving reimbursement of warranty-related expenses.

(2) Report all warranty-related information to the certificate holder.

(b) In your application for certification, identify the company whose trademark you will use.

(c) You remain responsible for meeting all the requirements of this chapter, including warranty and defect-reporting provisions.

[70 FR 40481, July 13, 2005, as amended at 73 FR 59242, Oct. 8, 2008]

§ 1048.640 What special provisions apply for small-volume engine manufacturers?

This section describes how we apply the special provisions in this part for small-volume engine manufacturers.

(a) Special provisions apply for small-volume engine manufacturers, as illustrated by the following examples:

(1) Waived requirements related to torque broadcasting. See § 1048.115.

(2) Assigned deterioration factors to reduce testing burden. See § 1048.240.

(3) Additional special provisions apply for small-volume engine and equipment manufacturers under 40 CFR part 1068. For example, see 40 CFR 1068.250.

(b) If you use any of the provisions of this part that apply specifically to small-volume engine manufacturers and we find that you do not qualify to use these provisions, we may consider you to be in violation of the requirements that apply for companies that are not small-volume engine manufacturers. If you no longer qualify as a small-volume engine manufacturer (based on increased production volumes or other factors), we will work with you to determine a reasonable schedule for complying with additional requirements that apply. For example, if you no longer qualify as a small-volume engine manufacturer shortly before you certify your engines for the next model year, we might allow you to use assigned deterioration factors for one more model year.

[73 FR 59242, Oct. 8, 2008]

Subpart H [Reserved]

Subpart I—Definitions and Other Reference Information

§ 1048.801 What definitions apply to this part?

The following definitions apply to this part. The definitions apply to all subparts unless we note otherwise. All undefined terms have the meaning the Act gives to them. The definitions follow:

Act means the Clean Air Act, as amended, 42 U.S.C. 7401–7671q.

Adjustable parameter means any device, system, or element of design that

someone can adjust (including those which are difficult to access) and that, if adjusted, may affect emissions or engine performance during emission testing or normal in-use operation. This includes, but is not limited to, parameters related to injection timing and fueling rate. You may ask us to exclude a parameter that is difficult to access if it cannot be adjusted to affect emissions without significantly degrading engine performance, or if you otherwise show us that it will not be adjusted in a way that affects emissions during in-use operation.

Aftertreatment means relating to a catalytic converter, particulate filter, or any other system, component, or technology mounted downstream of the exhaust valve (or exhaust port) whose design function is to decrease emissions in the engine exhaust before it is exhausted to the environment. Exhaust-gas recirculation (EGR), turbochargers, and oxygen sensors are not aftertreatment.

Aircraft means any vehicle capable of sustained air travel above treetop heights.

Alcohol-fueled engine means an engine that is designed to run using an alcohol fuel. For purposes of this definition, alcohol fuels do not include fuels with a nominal alcohol content below 25 percent by volume.

All-terrain vehicle has the meaning given in 40 CFR 1051.801.

Amphibious vehicle means a vehicle with wheels or tracks that is designed primarily for operation on land and secondarily for operation in water.

Auxiliary emission-control device means any element of design that senses temperature, motive speed, engine rpm, transmission gear, or any other parameter for the purpose of activating, modulating, delaying, or deactivating the operation of any part of the emission-control system.

Blue Sky Series engine means an engine meeting the requirements of § 1048.140.

Brake power means the usable power output of the engine, not including power required to fuel, lubricate, or heat the engine, circulate coolant to the engine, or to operate aftertreatment devices.

Calibration means the set of specifications and tolerances specific to a particular design, version, or application of a component or assembly capable of functionally describing its operation over its working range.

Carryover means relating to certification based on emission data generated from an earlier model year as described in § 1048.235(d).

Certification means relating to the process of obtaining a certificate of conformity for an engine family that complies with the emission standards and requirements in this part.

Certified emission level means the highest deteriorated emission level in an engine family for a given pollutant from either transient or steady-state testing.

Compression-ignition means relating to a type of reciprocating, internal-combustion engine that is not a spark-ignition engine.

Constant-speed engine means an engine that is certified only for constant-speed operation. This may include engines that allow the operator to adjust the set point for fixing the appropriate governed speed. See subparts B and C of this part for specific provisions related to certifying engines only for constant-speed operation. Engines whose constant-speed governor function is removed or disabled are no longer constant-speed engines.

Constant-speed operation has the meaning given in 40 CFR 1065.1001.

Crankcase emissions means airborne substances emitted to the atmosphere from any part of the engine crankcase's ventilation or lubrication systems. The crankcase is the housing for the crankshaft and other related internal parts.

Critical emission-related component means any of the following components:

(1) Electronic control units, aftertreatment devices, fuel-metering components, EGR-system components, crankcase-ventilation valves, all components related to charge-air compression and cooling, and all sensors and actuators associated with any of these components.

(2) Any other component whose primary purpose is to reduce emissions.

Date of manufacture has the meaning given in 40 CFR 1068.30.

Days means calendar days unless otherwise specified. For example, where we specify working days, we mean calendar days excluding weekends and U.S. national holidays.

Designated Compliance Officer means the Manager, Heavy-Duty and Nonroad Engine Group (6405–J), U.S. Environmental Protection Agency, 1200 Pennsylvania Ave., NW., Washington, DC 20460.

Designated Enforcement Officer means the Director, Air Enforcement Division (2242A), U.S. Environmental Protection Agency, 1200 Pennsylvania Ave., NW., Washington, DC 20460.

Deteriorated emission level means the emission level that results from applying the appropriate deterioration factor to the official emission result of the emission-data engine.

Deterioration factor means the relationship between emissions at the end of useful life and emissions at the low-hour test point, expressed in one of the following ways:

(1) For multiplicative deterioration factors, the ratio of emissions at the end of useful life to emissions at the low-hour test point.

(2) For additive deterioration factors, the difference between emissions at the end of useful life and emissions at the low-hour test point.

Discrete-mode means relating to the discrete-mode type of steady-state test described in § 1048.505.

Emission-control system means any device, system, or element of design that controls or reduces the emissions of regulated pollutants from an engine.

Emission-data engine means an engine that is tested for certification. This includes engines tested to establish deterioration factors.

Emission-related maintenance means maintenance that substantially affects emissions or is likely to substantially affect emission deterioration.

Engine has the meaning given in 40 CFR 1068.30. This includes complete and partially complete engines.

Engine configuration means a unique combination of engine hardware and calibration within an engine family. Engines within a single engine configuration differ only with respect to normal production variability or factors unrelated to emissions.

Engine family has the meaning given in § 1048.230.

Engine manufacturer means the manufacturer of the engine. See the definition of ''manufacturer'' in this section.

Equipment manufacturer means a manufacturer of nonroad equipment. All nonroad equipment manufacturing entities under the control of the same person are considered to be a single nonroad equipment manufacturer.

Excluded means relating to an engine that either:

(1) Has been determined not to be a nonroad engine, as specified in 40 CFR 1068.30; or

(2) Is a nonroad engine that, according to § 1048.5, is not subject to this part 1048.

Exempted has the meaning given in 40 CFR 1068.30.

Exhaust-gas recirculation means a technology that reduces emissions by routing exhaust gases that had been exhausted from the combustion chamber(s) back into the engine to be mixed with incoming air before or during combustion. The use of valve timing to increase the amount of residual exhaust gas in the combustion chamber(s) that is mixed with incoming air before or during combustion is not considered exhaust-gas recirculation for the purposes of this part.

Fuel system means all components involved in transporting, metering, and mixing the fuel from the fuel tank to the combustion chamber(s), including the fuel tank, fuel tank cap, fuel pump, fuel filters, fuel lines, carburetor or fuel-injection components, and all fuel-system vents.

Fuel type means a general category of fuels such as gasoline or natural gas. There can be multiple grades within a single fuel type, such as winter-grade and summer-grade gasoline.

Good engineering judgment has the meaning given in 40 CFR 1068.30. See 40 CFR 1068.5 for the administrative process we use to evaluate good engineering judgment.

High-cost warranted part means a component covered by the emission-related warranty with a replacement cost (at the time of certification) exceeding $400 (in 1998 dollars). Adjust this value

using the most recent annual average consumer price index information published by the U.S. Bureau of Labor Statistics. For this definition, replacement cost includes the retail cost of the part plus labor and standard diagnosis.

High-load engine means an engine for which the engine manufacturer can provide clear evidence that operation below 75 percent of maximum load in its final application will be rare.

Hydrocarbon (HC) means the hydrocarbon group on which the emission standards are based for each fuel type, as described in §1048.101(e).

Identification number means a unique specification (for example, a model number/serial number combination) that allows someone to distinguish a particular engine from other similar engines.

Intermediate test speed has the meaning given in 40 CFR 1065.1001.

Low-hour means relating to an engine with stabilized emissions and represents the undeteriorated emission level. This would generally involve less than 125 hours of operation.

Manufacturer has the meaning given in section 216(1) of the Act. In general, this term includes any person who manufactures an engine, vehicle, or piece of equipment for sale in the United States or otherwise introduces a new nonroad engine into commerce in the United States. This includes importers who import engines, equipment, or vehicles for resale.

Marine engine means a nonroad engine that is installed or intended to be installed on a marine vessel. This includes a portable auxiliary engine only if its fueling, cooling, or exhaust system is an integral part of the vessel. There are two kinds of marine engines:

(1) Propulsion marine engine means a marine engine that moves a vessel through the water or directs the vessel's movement.

(2) Auxiliary marine engine means a marine engine not used for propulsion.

Marine vessel has the meaning given in 1 U.S.C. 3, except that it does not include amphibious vehicles. The definition in 1 U.S.C. 3 very broadly includes every craft capable of being used as a means of transportation on water.

Maximum engine power has one of the following meanings:

(1) For engines at or below 100 kW, maximum engine power has the meaning given in 40 CFR 90.3 for 2010 and earlier model years and in 40 CFR 1054.140 for 2011 and later model years.

(2) For engines above 100 kW, maximum engine power has the meaning given in 40 CFR 1039.140.

Maximum test speed has one of the following meanings:

(1) For variable-speed engines, maximum test speed has the meaning given in 40 CFR 1065.1001.

(2) For transient testing of constant-speed engines, maximum test speed means the highest speed at which the engine produces zero torque.

(3) For steady-state testing of constant-speed engines, maximum test speed means the speed at which the engine produces peak torque.

Maximum test torque has the meaning given in 40 CFR 1065.1001.

Model year means one of the following things:

(1) For freshly manufactured equipment and engines (see definition of ''new nonroad engine,'' paragraph (1)), model year means one of the following:

(i) Calendar year.

(ii) Your annual new model production period if it is different than the calendar year.

This must include January 1 of the calendar year for which the model year is named. It may not begin before January 2 of the previous calendar year and it must end by December 31 of the named calendar year.

(2) For an engine that is converted to a nonroad engine after being placed into service as a stationary engine, or being certified and placed into service as a motor vehicle engine, model year means the calendar year in which the engine was originally produced. For a motor vehicle engine that is converted to be a nonroad engine without having been certified, model year means the calendar year in which the engine becomes a new nonroad engine. (See definition of ''new nonroad engine,'' paragraph (2)).

(3) For a nonroad engine excluded under §1048.5 that is later converted to operate in an application that is not

excluded, model year means the calendar year in which the engine was originally produced (see definition of ''new nonroad engine,'' paragraph (3)).

(4) For engines that are not freshly manufactured but are installed in new nonroad equipment, model year means the calendar year in which the engine is installed in the new nonroad equipment (see definition of ''new nonroad engine,'' paragraph (4)).

(5) For imported engines:

(i) For imported engines described in paragraph (5)(i) of the definition of ''new nonroad engine,'' *model year* has the meaning given in paragraphs (1) through (4) of this definition.

(ii) For imported engines described in paragraph (5)(ii) of the definition of ''new nonroad engine,'' *model year* means the calendar year in which the engine is modified.

(iii) For imported engines described in paragraph (5)(iii) of the definition of ''new nonroad engine,'' *model year* means the calendar year in which the engine is assembled in its imported configuration, unless specified otherwise in this part or in 40 CFR part 1068.

Motor vehicle has the meaning given in 40 CFR 85.1703(a).

New nonroad engine means any of the following things:

(1) A freshly manufactured nonroad engine for which the ultimate purchaser has never received the equitable or legal title. This kind of engine might commonly be thought of as ''brand new.'' In the case of this paragraph (1), the engine is new from the time it is produced until the ultimate purchaser receives the title or the product is placed into service, whichever comes first.

(2) An engine originally manufactured as a motor vehicle engine or a stationary engine that is later used or intended to be used in a piece of nonroad equipment. In this case, the engine is no longer a motor vehicle or stationary engine and becomes a ''new nonroad engine.'' The engine is no longer new when it is placed into nonroad service. This paragraph (2) applies if a motor vehicle engine or a stationary engine is installed in nonroad equipment, or if a motor vehicle or a piece of stationary equipment is modified (or moved) to become nonroad equipment.

(3) A nonroad engine that has been previously placed into service in an application we exclude under §1048.5, when that engine is installed in a piece of equipment that is covered by this part 1048. The engine is no longer new when it is placed into nonroad service covered by this part 1048. For example, this would apply to a marine-propulsion engine that is no longer used in a marine vessel but is instead installed in a piece of nonroad equipment subject to the provisions of this part.

(4) An engine not covered by paragraphs (1) through (3) of this definition that is intended to be installed in new nonroad equipment. This generally includes installation of used engines in new equipment. The engine is no longer new when the ultimate purchaser receives a title for the equipment or the product is placed into service, whichever comes first.

(5) An imported nonroad engine, subject to the following provisions:

(i) An imported nonroad engine covered by a certificate of conformity issued under this part that meets the criteria of one or more of paragraphs (1) through (4) of this definition, where the original engine manufacturer holds the certificate, is new as defined by those applicable paragraphs.

(ii) An imported engine covered by a certificate of conformity issued under this part, where someone other than the original engine manufacturer holds the certificate (such as when the engine is modified after its initial assembly), is a new nonroad engine when it is imported. It is no longer new when the ultimate purchaser receives a title for the engine or it is placed into service, whichever comes first.

(iii) An imported nonroad engine that is not covered by a certificate of conformity issued under this part at the time of importation is new. This addresses uncertified engines and equipment initially placed into service that someone seeks to import into the United States. Importation of this kind of engine (or equipment containing such an engine) is generally prohibited by 40 CFR part 1068. However, the importation of such an engine is not prohibited if the engine has a model year

before 2004, since it is not subject to standards.

New nonroad equipment means either of the following things:

(1) A nonroad piece of equipment for which the ultimate purchaser has never received the equitable or legal title. The product is no longer new when the ultimate purchaser receives this title or the product is placed into service, whichever comes first.

(2) An imported nonroad piece of equipment with an engine not covered by a certificate of conformity issued under this part at the time of importation and manufactured after January 1, 2004.

Noncommercial fuel means a combustible product that is not marketed as a commercial fuel, but is used as a fuel for nonroad engines. For example, this includes methane that is produced and released from landfills or oil wells, or similar unprocessed fuels that are not intended to meet any otherwise applicable fuel specifications. See § 1048.625 for provisions related to engines designed to burn noncommercial fuels.

Noncompliant engine means an engine that was originally covered by a certificate of conformity, but is not in the certified configuration or otherwise does not comply with the conditions of the certificate.

Nonconforming engine means an engine not covered by a certificate of conformity that would otherwise be subject to emission standards.

Nonmethane hydrocarbon has the meaning given in 40 CFR 1065.1001.

Nonroad means relating to nonroad engines or equipment that includes nonroad engines.

Nonroad engine has the meaning given in 40 CFR 1068.30. In general this means all internal-combustion engines except motor vehicle engines, stationary engines, engines used solely for competition, or engines used in aircraft. This part does not apply to all nonroad engines (see § 1048.5).

Nonroad equipment means a piece of equipment that is powered by one or more nonroad engines.

Off-highway motorcycle has the meaning given in 40 CFR 1051.801. (Note: highway motorcycles are regulated under 40 CFR part 86.)

Official emission result means the measured emission rate for an emission-data engine on a given duty cycle before the application of any deterioration factor.

Owners manual means a document or collection of documents prepared by the engine manufacturer for the owner or operator to describe appropriate engine maintenance, applicable warranties, and any other information related to operating or keeping the engine. The owners manual is typically provided to the ultimate purchaser at the time of sale. The owners manual may be in paper or electronic format.

Oxides of nitrogen has the meaning given in 40 CFR 1065.1001.

Piece of equipment means any vehicle, vessel, or other type of equipment using engines to which this part applies.

Placed into service means put into initial use for its intended purpose.

Point of first retail sale means the location at which the initial retail sale occurs. This generally means an equipment dealership, but may also include an engine seller or distributor in cases where loose engines are sold to the general public for uses such as replacement engines.

Ramped-modal means relating to the ramped-modal type of steady-state test described in § 1048.505.

Rated speed means the maximum full-load governed speed for governed engines and the speed of maximum power for ungoverned engines.

Revoke has the meaning given in 40 CFR 1068.30.

Round has the meaning given in 40 CFR 1065.1001, unless otherwise specified.

Scheduled maintenance means adjusting, repairing, removing, disassembling, cleaning, or replacing components or systems periodically to keep a part or system from failing, malfunctioning, or wearing prematurely. It also may mean actions you expect are necessary to correct an overt indication of failure or malfunction for which periodic maintenance is not appropriate.

Sealed has the meaning given in 40 CFR 1060.801.

Severe-duty application includes concrete saws, concrete pumps, and any

other application where an engine manufacturer can provide clear evidence that the majority of installations need air-cooled engines as a result of operation in a severe-duty environment.

Severe-duty engine means an engine from an engine family in which the majority of engines are installed in severe-duty applications.

Small-volume engine manufacturer means a company meeting either of the following characteristics:

(1) An engine manufacturer with U.S.-directed production volumes of engines subject to the requirements of this part totaling no more than 2,000 units in any year. This includes engines produced by parent or subsidiary companies.

(2) An engine manufacturer with fewer than 200 employees. This includes any employees working for parent or subsidiary companies.

Snowmobile has the meaning given in 40 CFR 1051.801.

Spark-ignition means relating to a gasoline-fueled engine or any other type of engine with a spark plug (or other sparking device) and with operating characteristics significantly similar to the theoretical Otto combustion cycle. Spark-ignition engines usually use a throttle to regulate intake air flow to control power during normal operation.

Steady-state has the meaning given in 40 CFR 1065.1001.

Stoichiometric means relating to the particular ratio of air and fuel such that if the fuel were fully oxidized, there would be no remaining fuel or oxygen. For example, stoichiometric combustion in a gasoline-fueled engine typically occurs at an air-fuel mass ratio of about 14.7.

Suspend has the meaning given in 40 CFR 1068.30.

Test engine means an engine in a test sample.

Test sample means the collection of engines selected from the population of an engine family for emission testing. This may include testing for certification, production-line testing, or in-use testing.

Tier 1 means relating to the emission standards and other requirements that apply beginning with the 2004 model year.

Tier 2 means relating to the emission standards and other requirements that apply beginning with the 2007 model year.

Total hydrocarbon has the meaning given in 40 CFR 1065.1001. This generally means the combined mass of organic compounds measured by the specified procedure for measuring total hydrocarbon, expressed as a hydrocarbon with a hydrogen-to-carbon mass ratio of 1.85:1.

Total hydrocarbon equivalent has the meaning given in 40 CFR 1065.1001.

Ultimate purchaser means, with respect to any new nonroad equipment or new nonroad engine, the first person who in good faith purchases such new nonroad equipment or new nonroad engine for purposes other than resale.

United States has the meaning given in 40 CFR 1068.30.

Upcoming model year means for an engine family the model year after the one currently in production.

U.S.-directed production volume means the number of engine units, subject to the requirements of this part, produced by a manufacturer for which the manufacturer has a reasonable assurance that sale was or will be made to ultimate purchasers in the United States.

Useful life means the period during which the engine is designed to properly function in terms of reliability and fuel consumption, without being remanufactured, specified as a number of hours of operation or calendar years, whichever comes first. It is the period during which a nonroad engine is required to comply with all applicable emission standards. See §1048.101(g). If an engine has no hour meter, the specified number of hours does not limit the period during which an in-use engine is required to comply with emission standards unless the degree of service accumulation can be verified separately.

Variable-speed engine means an engine that is not a constant-speed engine.

Variable-speed operation means engine operation that does not meet the definition of constant-speed operation.

Void has the meaning given in 40 CFR 1068.30.

Volatile liquid fuel means any fuel other than diesel or biodiesel that is a liquid at atmospheric pressure and has a Reid Vapor Pressure higher than 2.0 pounds per square inch.

Wide-open throttle means maximum throttle opening. Unless this is specified at a given speed, it refers to maximum throttle opening at maximum speed. For electronically controlled or other engines with multiple possible fueling rates, wide-open throttle also means the maximum fueling rate at maximum throttle opening under test conditions.

We (us, our) means the Administrator of the Environmental Protection Agency and any authorized representatives.

[70 FR 40482, July 13, 2005, as amended at 73 FR 59242, Oct. 8, 2008; 74 FR 8426, Feb. 24, 2009; 75 FR 23023, Apr. 30, 2010]

§ 1048.805 What symbols, acronyms, and abbreviations does this part use?

The following symbols, acronyms, and abbreviations apply to this part:

°C degrees Celsius.
ASTM American Society for Testing and Materials.
cc cubic centimeters.
CFR Code of Federal Regulations.
CH_4 methane.
cm centimeter.
CO carbon monoxide.
CO_2 carbon dioxide.
EPA Environmental Protection Agency.
g/kW-hr grams per kilowatt-hour.
HC hydrocarbon.
ISO International Organization for Standardization.
kPa kilopascals.
kW kilowatts.
LPG liquefied petroleum gas.
m meters.
MIL malfunction-indicator light.
mm Hg millimeters of mercury.
N_2O nitrous oxide.
NARA National Archives and Records Administration.
NMHC nonmethane hydrocarbons.
NO_X oxides of nitrogen (NO and NO_2).
psi pounds per square inch of absolute pressure.
psig pounds per square inch of gauge pressure.
rpm revolutions per minute.
SAE Society of Automotive Engineers.
SI spark-ignition.
THC total hydrocarbon.
THCE total hydrocarbon equivalent.
U.S.C. United States Code.

[67 FR 68347, Nov. 8, 2002, as amended at 70 FR 40485, July 13, 2005; 74 FR 56510, Oct. 30, 2009]

§ 1048.810 What materials does this part reference?

Documents listed in this section have been incorporated by reference into this part. The Director of the Federal Register approved the incorporation by reference as prescribed in 5 U.S.C. 552(a) and 1 CFR part 51. Anyone may inspect copies at the U.S. EPA, Air and Radiation Docket and Information Center, 1301 Constitution Ave., NW., Room B102, EPA West Building, Washington, DC 20460 or at the National Archives and Records Administration (NARA). For information on the availability of this material at NARA, call 202–741–6030, or go to: *http://www.archives.gov/federal_register/code_of_federal_regulations/ibr_locations.html*.

(a) *SAE material*. Table 1 of this section lists material from the Society of Automotive Engineers that we have incorporated by reference. The first column lists the number and name of the material. The second column lists the sections of this part where we reference it. Anyone may purchase copies of these materials from the Society of Automotive Engineers, 400 Commonwealth Drive, Warrendale, PA 15096 or *http://www.sae.org*. Table 1 follows:

TABLE 1 OF § 1048.810—SAE MATERIALS

Document number and name	Part 1048 reference
SAE J2260, Nonmetallic Fuel System Tubing with One or More Layers, November 2004	1048.105

(b) *ISO material*. Table 2 of this section lists material from the International Organization for Standardization that we have incorporated by reference. The first column lists the number and name of the material. The second column lists the section of this part where we reference it. Anyone may purchase copies of these materials from the International Organization for Standardization, Case Postale 56, CH–1211 Geneva 20, Switzerland or *http://www.iso.org*. Table 2 follows:

TABLE 2 OF § 1048.810—ISO MATERIALS

Document number and name	Part 1048 reference
ISO 9141–2 Road vehicles—Diagnostic systems—Part 2: CARB requirements for interchange of digital information, February 1994	1048.110
ISO 14230–4 Road vehicles—Diagnostic systems—Keyword Protocol 2000—Part 4: Requirements for emission-related systems, June 2000	1048.110

[73 FR 59244, Oct. 8, 2008]

§ 1048.815 What provisions apply to confidential information?

(a) Clearly show what you consider confidential by marking, circling, bracketing, stamping, or some other method.

(b) We will store your confidential information as described in 40 CFR part 2. Also, we will disclose it only as specified in 40 CFR part 2. This applies both to any information you send us and to any information we collect from inspections, audits, or other site visits.

(c) If you send us a second copy without the confidential information, we will assume it contains nothing confidential whenever we need to release information from it.

(d) If you send us information without claiming it is confidential, we may make it available to the public without further notice to you, as described in 40 CFR 2.204.

[70 FR 40486, July 13, 2005]

§ 1048.820 How do I request a hearing?

(a) You may request a hearing under certain circumstances, as described elsewhere in this part. To do this, you must file a written request, including a description of your objection and any supporting data, within 30 days after we make a decision.

(b) For a hearing you request under the provisions of this part, we will approve your request if we find that your request raises a substantial factual issue.

(c) If we agree to hold a hearing, we will use the procedures specified in 40 CFR part 1068, subpart G.

[70 FR 40486, July 13, 2005]

§ 1048.825 What reporting and recordkeeping requirements apply under this part?

Under the Paperwork Reduction Act (44 U.S.C. 3501 *et seq.*), the Office of Management and Budget approves the reporting and recordkeeping specified in the applicable regulations. The following items illustrate the kind of reporting and recordkeeping we require for engines and equipment regulated under this part:

(a) We specify the following requirements related to engine certification in this part 1048:

(1) In § 1048.20 we require manufacturers of stationary engines to label their engines in certain cases.

(2) In § 1048.135 we require engine manufacturers to keep certain records related to duplicate labels sent to equipment manufacturers.

(3) In § 1048.145 we include various reporting and recordkeeping requirements related to interim provisions.

(4) In subpart C of this part we identify a wide range of information required to certify engines.

(5) In §§ 1048.345 and 1048.350 we specify certain records related to production-line testing.

(6) In §§ 1048.420 and 1048.425 we specify certain records related to in-use testing.

(7) In subpart G of this part we identify several reporting and recordkeeping items for making demonstrations and getting approval related to various special compliance provisions.

(b) [Reserved]

(c) We specify the following requirements related to testing in 40 CFR part 1065:

(1) In 40 CFR 1065.2 we give an overview of principles for reporting information.

(2) In 40 CFR 1065.10 and 1065.12 we specify information needs for establishing various changes to published test procedures.

(3) In 40 CFR 1065.25 we establish basic guidelines for storing test information.

(4) In 40 CFR 1065.695 we identify data that may be appropriate for collecting during testing of in-use engines using portable analyzers.

(d) We specify the following requirements related to the general compliance provisions in 40 CFR part 1068:

(1) In 40 CFR 1068.5 we establish a process for evaluating good engineering judgment related to testing and certification.

(2) In 40 CFR 1068.25 we describe general provisions related to sending and keeping information.

(3) In 40 CFR 1068.27 we require manufacturers to make engines available for our testing or inspection if we make such a request.

(4) In 40 CFR 1068.105 we require equipment manufacturers to keep certain records related to duplicate labels from engine manufacturers.

(5) In 40 CFR 1068.120 we specify recordkeeping related to rebuilding engines.

(6) In 40 CFR part 1068, subpart C, we identify several reporting and recordkeeping items for making demonstrations and getting approval related to various exemptions.

(7) In 40 CFR part 1068, subpart D, we identify several reporting and recordkeeping items for making demonstrations and getting approval related to importing engines.

(8) In 40 CFR 1068.450 and 1068.455 we specify certain records related to testing production-line engines in a selective enforcement audit.

(9) In 40 CFR 1068.501 we specify certain records related to investigating and reporting emission-related defects.

(10) In 40 CFR 1068.525 and 1068.530 we specify certain records related to recalling nonconforming engines.

[73 FR 59245, Oct. 8, 2008]

APPENDIX I TO PART 1048 [RESERVED]

APPENDIX II TO PART 1048—LARGE SPARK-IGNITION (SI) COMPOSITE TRANSIENT CYCLE

The following table shows the transient duty-cycle for engines that are not constant-speed engines, as described in §1048.510:

Time(s)	Normalized speed (percent)	Normalized torque (percent)
0	0	0
1	0	0
2	0	0
3	0	0
4	0	0
5	0	0
6	0	0
7	0	0
8	0	0
9	1	8
10	6	54
11	8	61
12	34	59
13	22	46
14	5	51
15	18	51
16	31	50
17	30	56
18	31	49
19	25	66
20	58	55
21	43	31
22	16	45
23	24	38
24	24	27
25	30	33
26	45	65
27	50	49
28	23	42
29	13	42
30	9	45
31	23	30
32	37	45
33	44	50
34	49	52
35	55	49
36	61	46
37	66	38
38	42	33
39	17	41
40	17	37
41	7	50
42	20	32
43	5	55
44	30	42
45	44	53
46	45	56
47	41	52
48	24	41
49	15	40
50	11	44

Time(s)	Normalized speed (percent)	Normalized torque (percent)
51	32	31
52	38	54
53	38	47
54	9	55
55	10	50
56	33	55
57	48	56
58	49	47
59	33	44
60	52	43
61	55	43
62	59	38
63	44	28
64	24	37
65	12	44
66	9	47
67	12	52
68	34	21
69	29	44
70	44	54
71	54	62
72	62	57
73	72	56
74	88	71
75	100	69
76	100	34
77	100	42
78	100	54
79	100	58
80	100	38
81	83	17
82	61	15
83	43	22
84	24	35
85	16	39
86	15	45
87	32	34
88	14	42
89	8	48
90	5	51
91	10	41
92	12	37
93	4	47
94	3	49
95	3	50
96	4	49
97	4	48
98	8	43
99	2	51
100	5	46
101	8	41
102	4	47
103	3	49
104	6	45
105	3	48
106	10	42
107	18	27
108	3	50
109	11	41
110	34	29
111	51	57
112	67	63
113	61	32
114	44	31
115	48	54
116	69	65
117	85	65
118	81	29
119	74	21
120	62	23
121	76	58
122	96	75
123	100	77
124	100	27
125	100	79
126	100	79
127	100	81
128	100	57
129	99	52
130	81	35
131	69	29
132	47	22
133	34	28
134	27	37
135	83	60
136	100	74
137	100	7
138	100	2
139	70	18
140	23	39
141	5	54
142	11	40
143	11	34
144	11	41
145	19	25
146	16	32
147	20	31
148	21	38
149	21	42
150	9	51
151	4	49
152	2	51
153	1	58
154	21	57
155	29	47
156	33	45
157	16	49
158	38	45
159	37	43
160	35	42
161	39	43
162	51	49
163	59	55
164	65	54
165	76	62
166	84	59
167	83	29
168	67	35
169	84	54
170	90	58
171	93	43
172	90	29
173	66	19
174	52	16
175	49	17
176	56	38
177	73	71
178	86	80
179	96	75
180	89	27
181	66	17
182	50	18
183	36	25
184	36	24
185	38	40
186	40	50
187	27	48
188	19	48
189	23	50
190	19	45
191	6	51
192	24	48
193	49	67
194	47	49

Time(s)	Normalized speed (percent)	Normalized torque (percent)
195	22	44
196	25	40
197	38	54
198	43	55
199	40	52
200	14	49
201	11	45
202	7	48
203	26	41
204	41	59
205	53	60
206	44	54
207	22	40
208	24	41
209	32	53
210	44	74
211	57	25
212	22	49
213	29	45
214	19	37
215	14	43
216	36	40
217	43	63
218	42	49
219	15	50
220	19	44
221	47	59
222	67	80
223	76	74
224	87	66
225	98	61
226	100	38
227	97	27
228	100	53
229	100	72
230	100	49
231	100	4
232	100	13
233	87	15
234	53	26
235	33	27
236	39	19
237	51	33
238	67	54
239	83	60
240	95	52
241	100	50
242	100	36
243	100	25
244	85	16
245	62	16
246	40	26
247	56	39
248	81	75
249	98	86
250	100	76
251	100	51
252	100	78
253	100	83
254	100	100
255	100	66
256	100	85
257	100	72
258	100	45
259	98	58
260	60	30
261	43	32
262	71	36
263	44	32
264	24	38
265	42	17
266	22	51
267	13	53
268	23	45
269	29	50
270	28	42
271	21	55
272	34	57
273	44	47
274	19	46
275	13	44
276	25	36
277	43	51
278	55	73
279	68	72
280	76	63
281	80	45
282	83	40
283	78	26
284	60	20
285	47	19
286	52	25
287	36	30
288	40	26
289	45	34
290	47	35
291	42	28
292	46	38
293	48	44
294	68	61
295	70	47
296	48	28
297	42	22
298	31	29
299	22	35
300	28	28
301	46	46
302	62	69
303	76	81
304	88	85
305	98	81
306	100	74
307	100	13
308	100	11
309	100	17
310	99	3
311	80	7
312	62	11
313	63	11
314	64	16
315	69	43
316	81	67
317	93	74
318	100	72
319	94	27
320	73	15
321	40	33
322	40	52
323	50	50
324	11	53
325	12	45
326	5	50
327	1	55
328	7	55
329	62	60
330	80	28
331	23	37
332	39	58
333	47	24
334	59	51
335	58	68
336	36	52
337	18	42
338	36	52

Time(s)	Normalized speed (percent)	Normalized torque (percent)
339	59	73
340	72	85
341	85	92
342	99	90
343	100	72
344	100	18
345	100	76
346	100	64
347	100	87
348	100	97
349	100	84
350	100	100
351	100	91
352	100	83
353	100	93
354	100	100
355	94	43
356	72	10
357	77	3
358	48	2
359	29	5
360	59	19
361	63	5
362	35	2
363	24	3
364	28	2
365	36	16
366	54	23
367	60	10
368	33	1
369	23	0
370	16	0
371	11	0
372	20	0
373	25	2
374	40	3
375	33	4
376	34	5
377	46	7
378	57	10
379	66	11
380	75	14
381	79	11
382	80	16
383	92	21
384	99	16
385	83	2
386	71	2
387	69	4
388	67	4
389	74	16
390	86	25
391	97	28
392	100	15
393	83	2
394	62	4
395	40	6
396	49	10
397	36	5
398	27	4
399	29	3
400	22	2
401	13	3
402	37	36
403	90	26
404	41	2
405	25	2
406	29	2
407	38	7
408	50	13
409	55	10
410	29	3
411	24	7
412	51	16
413	62	15
414	72	35
415	91	74
416	100	73
417	100	8
418	98	11
419	100	59
420	100	98
421	100	99
422	100	75
423	100	95
424	100	100
425	100	97
426	100	90
427	100	86
428	100	82
429	97	43
430	70	16
431	50	20
432	42	33
433	89	64
434	89	77
435	99	95
436	100	41
437	77	12
438	29	37
439	16	41
440	16	38
441	15	36
442	18	44
443	4	55
444	24	26
445	26	35
446	15	45
447	21	39
448	29	52
449	26	46
450	27	50
451	13	43
452	25	36
453	37	57
454	29	46
455	17	39
456	13	41
457	19	38
458	28	35
459	8	51
460	14	36
461	17	47
462	34	39
463	34	57
464	11	70
465	13	51
466	13	68
467	38	44
468	53	67
469	29	69
470	19	65
471	52	45
472	61	79
473	29	70
474	15	53
475	15	60
476	52	40
477	50	61
478	13	74
479	46	51
480	60	73
481	33	84
482	31	63

Time(s)	Normalized speed (percent)	Normalized torque (percent)
483	41	42
484	26	69
485	23	65
486	48	49
487	28	57
488	16	67
489	39	48
490	47	73
491	35	87
492	26	73
493	30	61
494	34	49
495	35	66
496	56	47
497	49	64
498	59	64
499	42	69
500	6	77
501	5	59
502	17	59
503	45	53
504	21	62
505	31	60
506	53	68
507	48	79
508	45	61
509	51	47
510	41	48
511	26	58
512	21	62
513	50	52
514	39	65
515	23	65
516	42	62
517	57	80
518	66	81
519	64	62
520	45	42
521	33	42
522	27	57
523	31	59
524	41	53
525	45	72
526	48	73
527	46	90
528	56	76
529	64	76
530	69	64
531	72	59
532	73	58
533	71	56
534	66	48
535	61	50
536	55	56
537	52	52
538	54	49
539	61	50
540	64	54
541	67	54
542	68	52
543	60	53
544	52	50
545	45	49
546	38	45
547	32	45
548	26	53
549	23	56
550	30	49
551	33	55
552	35	59
553	33	65
554	30	67
555	28	59
556	25	58
557	23	56
558	22	57
559	19	63
560	14	63
561	31	61
562	35	62
563	21	80
564	28	65
565	7	74
566	23	54
567	38	54
568	14	78
569	38	58
570	52	75
571	59	81
572	66	69
573	54	44
574	48	34
575	44	33
576	40	40
577	28	58
578	27	63
579	35	45
580	20	66
581	15	60
582	10	52
583	22	56
584	30	62
585	21	67
586	29	53
587	41	56
588	15	67
589	24	56
590	42	69
591	39	83
592	40	73
593	35	67
594	32	61
595	30	65
596	30	72
597	48	51
598	66	58
599	62	71
600	36	63
601	17	59
602	16	50
603	16	62
604	34	48
605	51	66
606	35	74
607	15	56
608	19	54
609	43	65
610	52	80
611	52	83
612	49	57
613	48	46
614	37	36
615	25	44
616	14	53
617	13	64
618	23	56
619	21	63
620	18	67
621	20	54
622	16	67
623	26	56
624	41	65
625	28	62
626	19	60

Time(s)	Normalized speed (percent)	Normalized torque (percent)
627	33	56
628	37	70
629	24	79
630	28	57
631	40	57
632	40	58
633	28	44
634	25	41
635	29	53
636	31	55
637	26	64
638	20	50
639	16	53
640	11	54
641	13	53
642	23	50
643	32	59
644	36	63
645	33	59
646	24	52
647	20	52
648	22	55
649	30	53
650	37	59
651	41	58
652	36	54
653	29	49
654	24	53
655	14	57
656	10	54
657	9	55
658	10	57
659	13	55
660	15	64
661	31	57
662	19	69
663	14	59
664	33	57
665	41	65
666	39	64
667	39	59
668	39	51
669	28	41
670	19	49
671	27	54
672	37	63
673	32	74
674	16	70
675	12	67
676	13	60
677	17	56
678	15	62
679	25	47
680	27	64
681	14	71
682	5	65
683	6	57
684	6	57
685	15	52
686	22	61
687	14	77
688	12	67
689	12	62
690	14	59
691	15	58
692	18	55
693	22	53
694	19	69
695	14	67
696	9	63
697	8	56
698	17	49
699	25	55
700	14	70
701	12	60
702	22	57
703	27	67
704	29	68
705	34	62
706	35	61
707	28	78
708	11	71
709	4	58
710	5	58
711	10	56
712	20	63
713	13	76
714	11	65
715	9	60
716	7	55
717	8	53
718	10	60
719	28	53
720	12	73
721	4	64
722	4	61
723	4	61
724	10	56
725	8	61
726	20	56
727	32	62
728	33	66
729	34	73
730	31	61
731	33	55
732	33	60
733	31	59
734	29	58
735	31	53
736	33	51
737	33	48
738	27	44
739	21	52
740	13	57
741	12	56
742	10	64
743	22	47
744	15	74
745	8	66
746	34	47
747	18	71
748	9	57
749	11	55
750	12	57
751	10	61
752	16	53
753	12	75
754	6	70
755	12	55
756	24	50
757	28	60
758	28	64
759	23	60
760	20	56
761	26	50
762	28	55
763	18	56
764	15	52
765	11	59
766	16	59
767	34	54
768	16	82
769	15	64
770	36	53

Time(s)	Normalized speed (percent)	Normalized torque (percent)
771	45	64
772	41	59
773	34	50
774	27	45
775	22	52
776	18	55
777	26	54
778	39	62
779	37	71
780	32	58
781	24	48
782	14	59
783	7	59
784	7	55
785	18	49
786	40	62
787	44	73
788	41	68
789	35	48
790	29	54
791	22	69
792	46	53
793	59	71
794	69	68
795	75	47
796	62	32
797	48	35
798	27	59
799	13	58
800	14	54
801	21	53
802	23	56
803	23	57
804	23	65
805	13	65
806	9	64
807	27	56
808	26	78
809	40	61
810	35	76
811	28	66
812	23	57
813	16	50
814	11	53
815	9	57
816	9	62
817	27	57
818	42	69
819	47	75
820	53	67
821	61	62
822	63	53
823	60	54
824	56	44
825	49	39
826	39	35
827	30	34
828	33	46
829	44	56
830	50	56
831	44	52
832	38	46
833	33	44
834	29	45
835	24	46
836	18	52
837	9	55
838	10	54
839	20	53
840	27	58
841	29	59
842	30	62
843	30	65
844	27	66
845	32	58
846	40	56
847	41	57
848	18	73
849	15	55
850	18	50
851	17	52
852	20	49
853	16	62
854	4	67
855	2	64
856	7	54
857	10	50
858	9	57
859	5	62
860	12	51
861	14	65
862	9	64
863	31	50
864	30	78
865	21	65
866	14	51
867	10	55
868	6	59
869	7	59
870	19	54
871	23	61
872	24	62
873	34	61
874	51	67
875	60	66
876	58	55
877	60	52
878	64	55
879	68	51
880	63	54
881	64	50
882	68	58
883	73	47
884	63	40
885	50	38
886	29	61
887	14	61
888	14	53
889	42	6
890	58	6
891	58	6
892	77	39
893	93	56
894	93	44
895	93	37
896	93	31
897	93	25
898	93	26
899	93	27
900	93	25
901	93	21
902	93	22
903	93	24
904	93	23
905	93	27
906	93	34
907	93	32
908	93	26
909	93	31
910	93	34
911	93	31
912	93	33
913	93	36
914	93	37

Time(s)	Normalized speed (percent)	Normalized torque (percent)
915	93	34
916	93	30
917	93	32
918	93	35
919	93	35
920	93	32
921	93	28
922	93	23
923	94	18
924	95	18
925	96	17
926	95	13
927	96	10
928	95	9
929	95	7
930	95	7
931	96	7
932	96	6
933	96	6
934	95	6
935	90	6
936	69	43
937	76	62
938	93	47
939	93	39
940	93	35
941	93	34
942	93	36
943	93	39
944	93	34
945	93	26
946	93	23
947	93	24
948	93	24
949	93	22
950	93	19
951	93	17
952	93	19
953	93	22
954	93	24
955	93	23
956	93	20
957	93	20
958	94	19
959	95	19
960	95	17
961	96	13
962	95	10
963	96	9
964	95	7
965	95	7
966	95	7
967	95	6
968	96	6
969	96	6
970	89	6
971	68	6
972	57	6
973	66	32
974	84	52
975	93	46
976	93	42
977	93	36
978	93	28
979	93	23
980	93	19
981	93	16
982	93	15
983	93	16
984	93	15
985	93	14
986	93	15
987	93	16
988	94	15
989	93	32
990	93	45
991	93	43
992	93	37
993	93	29
994	93	23
995	93	20
996	93	18
997	93	16
998	93	17
999	93	16
1000	93	15
1001	93	15
1002	93	15
1003	93	14
1004	93	15
1005	93	15
1006	93	14
1007	93	13
1008	93	14
1009	93	14
1010	93	15
1011	93	16
1012	93	17
1013	93	20
1014	93	22
1015	93	20
1016	93	19
1017	93	20
1018	93	19
1019	93	19
1020	93	20
1021	93	32
1022	93	37
1023	93	28
1024	93	26
1025	93	24
1026	93	22
1027	93	22
1028	93	21
1029	93	20
1030	93	20
1031	93	20
1032	93	20
1033	93	19
1034	93	18
1035	93	20
1036	93	20
1037	93	20
1038	93	20
1039	93	19
1040	93	18
1041	93	18
1042	93	17
1043	93	16
1044	93	16
1045	93	15
1046	93	16
1047	93	18
1048	93	37
1049	93	48
1050	93	38
1051	93	31
1052	93	26
1053	93	21
1054	93	18
1055	93	16
1056	93	17
1057	93	18
1058	93	19

Time(s)	Normalized speed (percent)	Normalized torque (percent)
1059	93	21
1060	93	20
1061	93	18
1062	93	17
1063	93	17
1064	93	18
1065	93	18
1066	93	18
1067	93	19
1068	93	18
1069	93	18
1070	93	20
1071	93	23
1072	93	25
1073	93	25
1074	93	24
1075	93	24
1076	93	22
1077	93	22
1078	93	22
1079	93	19
1080	93	16
1081	95	17
1082	95	37
1083	93	43
1084	93	32
1085	93	27
1086	93	26
1087	93	24
1088	93	22
1089	93	22
1090	93	22
1091	93	23
1092	93	22
1093	93	22
1094	93	23
1095	93	23
1096	93	23
1097	93	22
1098	93	23
1099	93	23
1100	93	23
1101	93	25
1102	93	27
1103	93	26
1104	93	25
1105	93	27
1106	93	27
1107	93	27
1108	93	24
1109	93	20
1110	93	18
1111	93	17
1112	93	17
1113	93	18
1114	93	18
1115	93	18
1116	93	19
1117	93	22
1118	93	22
1119	93	19
1120	93	17
1121	93	17
1122	93	18
1123	93	18
1124	93	19
1125	93	19
1126	93	20
1127	93	19
1128	93	20
1129	93	25
1130	93	30
1131	93	31
1132	93	26
1133	93	21
1134	93	18
1135	93	20
1136	93	25
1137	93	24
1138	93	21
1139	93	21
1140	93	22
1141	93	22
1142	93	28
1143	93	29
1144	93	23
1145	93	21
1146	93	18
1147	93	16
1148	93	16
1149	93	16
1150	93	17
1151	93	17
1152	93	17
1153	93	17
1154	93	23
1155	93	26
1156	93	22
1157	93	18
1158	93	16
1159	93	16
1160	93	17
1161	93	19
1162	93	18
1163	93	16
1164	93	19
1165	93	22
1166	93	25
1167	93	29
1168	93	27
1169	93	22
1170	93	18
1171	93	16
1172	93	19
1173	93	19
1174	93	17
1175	93	17
1176	93	17
1177	93	16
1178	93	16
1179	93	15
1180	93	16
1181	93	15
1182	93	17
1183	93	21
1184	93	30
1185	93	53
1186	93	54
1187	93	38
1188	93	30
1189	93	24
1190	93	20
1191	95	20
1192	96	18
1193	96	15
1194	96	11
1195	95	9
1196	95	8
1197	96	7
1198	94	33
1199	93	46
1200	93	37
1201	16	8
1202	0	0

Time(s)	Normalized speed (percent)	Normalized torque (percent)
1203	0	0
1204	0	0
1205	0	0
1206	0	0
1207	0	0
1208	0	0
1209	0	0

PART 1051—CONTROL OF EMISSIONS FROM RECREATIONAL ENGINES AND VEHICLES

Subpart A—Determining How To Follow This Part

Sec.

1051.1 Does this part apply for my vehicles or engines?
1051.2 Who is responsible for compliance?
1051.5 Which engines are excluded from this part's requirements?
1051.10 How is this part organized?
1051.15 Do any other regulation parts apply to me?
1051.20 May I certify a recreational engine instead of the vehicle?
1051.25 What requirements apply when installing certified engines in recreational vehicles?
1051.30 Submission of information.

Subpart B—Emission Standards and Related Requirements

1051.101 What emission standards and other requirements must my vehicles meet?
1051.103 What are the exhaust emission standards for snowmobiles?
1051.105 What are the exhaust emission standards for off-highway motorcycles?
1051.107 What are the exhaust emission standards for all-terrain vehicles (ATVs) and offroad utility vehicles?
1051.110 What evaporative emission standards must my vehicles meet?
1051.115 What other requirements apply?
1051.120 What emission-related warranty requirements apply to me?
1051.125 What maintenance instructions must I give to buyers?
1051.130 What installation instructions must I give to vehicle manufacturers?
1051.135 How must I label and identify the vehicles I produce?
1051.137 What are the consumer labeling requirements?
1051.140 What is my vehicle's maximum engine power and displacement?
1051.145 What provisions apply only for a limited time?

Subpart C—Certifying Engine Families

1051.201 What are the general requirements for obtaining a certificate of conformity?
1051.205 What must I include in my application?
1051.210 May I get preliminary approval before I complete my application?
1051.220 How do I amend the maintenance instructions in my application?
1051.225 How do I amend my application for certification to include new or modified vehicle configurations or to change an FEL?
1051.230 How do I select engine families?
1051.235 What emission testing must I perform for my application for a certificate of conformity?
1051.240 How do I demonstrate that my engine family complies with exhaust emission standards?
1051.243 How do I determine deterioration factors from exhaust durability testing?
1051.245 How do I demonstrate that my engine family complies with evaporative emission standards?
1051.250 What records must I keep and make available to EPA?
1051.255 What decisions may EPA make regarding my certificate of conformity?

Subpart D—Testing Production-Line Vehicles and Engines

1051.301 When must I test my production-line vehicles or engines?
1051.305 How must I prepare and test my production-line vehicles or engines?
1051.310 How must I select vehicles or engines for production-line testing?
1051.315 How do I know when my engine family fails the production-line testing requirements?
1051.320 What happens if one of my production-line vehicles or engines fails to meet emission standards?
1051.325 What happens if an engine family fails the production-line testing requirements?
1051.330 May I sell vehicles from an engine family with a suspended certificate of conformity?
1051.335 How do I ask EPA to reinstate my suspended certificate?
1051.340 When may EPA revoke my certificate under this subpart and how may I sell these vehicles again?
1051.345 What production-line testing records must I send to EPA?
1051.350 What records must I keep?

Subpart E—Testing In-Use Engines [Reserved]

Subpart F—Test Procedures

1051.501 What procedures must I use to test my vehicles or engines?
1051.505 What special provisions apply for testing snowmobiles?
1051.510 What special provisions apply for testing ATV engines? [Reserved]
1051.515 How do I test my fuel tank for permeation emissions?
1051.520 How do I perform exhaust durability testing?

Subpart G—Compliance Provisions

1051.601 What compliance provisions apply to vehicles and engines subject to this part?
1051.605 What provisions apply to engines already certified under the motor vehicle program or the Large Spark-ignition program?
1051.610 What provisions apply to vehicles already certified under the motor vehicle program?
1051.615 What are the special provisions for certifying small recreational engines?
1051.620 When may a manufacturer obtain an exemption for competition recreational vehicles?
1051.625 What special provisions apply to unique snowmobile designs for small-volume manufacturers?
1051.630 What special provisions apply to unique snowmobile designs for all manufacturers?
1051.635 What provisions apply to new manufacturers that are small businesses?
1051.640 What special provisions apply for custom off-highway motorcycles that are similar to highway motorcycles?
1051.645 What special provisions apply to branded engines?
1051.650 What special provisions apply for converting a vehicle to use an alternate fuel?

Subpart H—Averaging, Banking, and Trading for Certification

1051.701 General provisions.
1051.705 How do I average emission levels?
1051.710 How do I generate and bank emission credits?
1051.715 How do I trade emission credits?
1051.720 How do I calculate my average emission level or emission credits?
1051.725 What must I include in my applications for certification?
1051.730 What ABT reports must I send to EPA?
1051.735 What records must I keep?
1051.740 Are there special averaging provisions for snowmobiles?
1051.745 What can happen if I do not comply with the provisions of this subpart?

Subpart I—Definitions and Other Reference Information

1051.801 What definitions apply to this part?
1051.805 What symbols, acronyms, and abbreviations does this part use?
1051.815 What provisions apply to confidential information?
1051.820 How do I request a hearing?
1051.825 What reporting and recordkeeping requirements apply under this part?

AUTHORITY: 42 U.S.C. 7401–7671q.

SOURCE: 67 FR 68347, Nov. 8, 2002, unless otherwise noted.

Subpart A—Overview and Applicability

§ 1051.1 Does this part apply for my vehicles or engines?

(a) The regulations in this part 1051 apply for all the following new recreational vehicles or new engines used in the following recreational vehicles, except as provided in § 1051.5:

(1) Snowmobiles.

(2) Off-highway motorcycles.

(3) All-terrain vehicles (ATVs.)

(4) Offroad utility vehicles with engines with displacement less than or equal to 1000 cc, maximum engine power less than or equal to 30 kW, and maximum vehicle speed higher than 25 miles per hour. Offroad utility vehicles that are subject to this part are subject to the same requirements as ATVs. This means that any requirement that applies to ATVs also applies to these offroad utility vehicles, without regard to whether the regulatory language mentions offroad utility vehicles.

(b) In certain cases, the regulations in this part 1051 apply to new engines under 50 cc used in motorcycles that are motor vehicles. See 40 CFR 86.447–2006 or 86.448–2006 for provisions related to this allowance.

(c) This part 1051 applies for new recreational vehicles starting in the 2006 model year, except as described in subpart B of this part. You need not follow this part for vehicles you produce before the 2006 model year, unless you certify voluntarily. See §§ 1051.103 through 1051.110, § 1051.145, and the definition of ''model year'' in § 1051.801 for more information about the timing of the requirements.

(d) The requirements of this part begin to apply when a vehicle is new.

See the definition of ''new'' in § 1051.801 for more information. In some cases, vehicles or engines that have been previously used may be considered ''new'' for the purposes of this part.

(e) The evaporative emission requirements of this part apply to highway motorcycles, as specified in 40 CFR part 86, subpart E.

[70 FR 40486, July 13, 2005, as amended at 73 FR 59245, Oct. 8, 2008]

§ 1051.2 Who is responsible for compliance?

The regulations in this part 1051 contain provisions that affect both vehicle manufacturers and others. However, the requirements of this part are generally addressed to the vehicle manufacturer. The term ''you'' generally means the vehicle manufacturer, as defined in § 1051.801, especially for issues related to certification (including production-line testing, reporting, etc.).

[73 FR 59245, Oct. 8, 2008]

§ 1051.5 Which engines are excluded from this part's requirements?

(a)(1) You may exclude vehicles with compression-ignition engines. See 40 CFR parts 89 and 1039 for regulations that cover these engines.

(2) Vehicles with a combined total vehicle dry weight under 20.0 kilograms are excluded from this part. Spark-ignition engines in these vehicles must instead meet emission standards specified in 40 CFR parts 90 and 1054. See 40 CFR 90.103(a) and the definition of *handheld* in 40 CFR 1054.801.

(b) We may require you to label an engine or vehicle (or both) if this section excludes it and other requirements in this chapter do not apply.

[70 FR 40486, July 13, 2005, as amended at 73 FR 59245, Oct. 8, 2008]

§ 1051.10 How is this part organized?

This part 1051 is divided into the following subparts:

(a) Subpart A of this part defines the applicability of part 1051 and gives an overview of regulatory requirements.

(b) Subpart B of this part describes the emission standards and other requirements that must be met to certify engines under this part. Note that § 1051.145 discusses certain interim requirements and compliance provisions that apply only for a limited time.

(c) Subpart C of this part describes how to apply for a certificate of conformity.

(d) Subpart D of this part describes general provisions for testing production-line engines.

(e) [Reserved]

(f) Subpart F of this part describes how to test your engines (including references to other parts of the Code of Federal Regulations).

(g) Subpart G of this part and 40 CFR part 1068 describe requirements, prohibitions, and other provisions that apply to engine manufacturers, equipment manufacturers, owners, operators, rebuilders, and all others.

(h) Subpart H of this part describes how you may generate and use emission credits to certify your engines.

(i) Subpart I of this part contains definitions and other reference information.

[70 FR 40486, July 13, 2005, as amended at 73 FR 59245, Oct. 8, 2008]

§ 1051.15 Do any other regulation parts apply to me?

(a) Parts 86 and 1065 of this chapter describe procedures and equipment specifications for testing vehicles and engines to measure exhaust emissions. Subpart F of this part 1051 describes how to apply the provisions of parts 86 and 1065 of this chapter to determine whether vehicles meet the exhaust emission standards in this part.

(b) Part 1060 of this chapter describes standards and procedures that optionally apply for controlling evaporative emissions from engines fueled by gasoline or other volatile liquid fuels and the associated fuel systems.

(c) The requirements and prohibitions of part 1068 of this chapter apply to everyone, including anyone who manufactures, imports, installs, owns, operates, or rebuilds any of the vehicles subject to this part 1051, or vehicles containing these engines. Part 1068 of this chapter describes general provisions, including these seven areas:

(1) Prohibited acts and penalties for manufacturers and others.

(2) Rebuilding and other aftermarket changes.

(3) Exclusions and exemptions for certain vehicles and engines.

(4) Importing vehicles and engines.

(5) Selective enforcement audits of your production.

(6) Defect reporting and recall.

(7) Procedures for hearings.

(d) Other parts of this chapter apply if referenced in this part.

[70 FR 40487, July 13, 2005, as amended at 73 FR 59245, Oct. 8, 2008; 75 FR 23023, Apr. 30, 2010]

§ 1051.20 May I certify a recreational engine instead of the vehicle?

(a) You may certify engines sold separately from vehicles in either of two cases:

(1) If you manufacture recreational engines but not recreational vehicles, you may ask to certify the engine alone. In your request, explain why you cannot certify the entire vehicle.

(2) If you manufacture complete recreational vehicles containing engines you also sell separately, you may ask to certify all these engines in a single engine family or in separate engine families.

(b) If you certify an engine under this section, you must use the test procedures in subpart F of this part. If the test procedures require vehicle testing, use good engineering judgment to install the engine in an appropriate vehicle for measuring emissions.

(c) If we allow you to certify recreational engines, the vehicles must meet the applicable emission standards (including evaporative emission standards) with the engines installed in the appropriate vehicles. You must prepare installation instructions as described in § 1051.130 and use good engineering judgment so that the engines will meet emission standards after proper installation in the vehicle.

(d) Identify and label engines you produce under this section consistent with the requirements of § 1051.135. On the emission control information label, identify the manufacturing date of the engine rather than the vehicle.

(e) You may not use the provisions of this section to circumvent or reduce the stringency of this part's standards or other requirements.

(f) If you certify under paragraph (a)(1) of this section, you may ask us to allow you to perform production-line testing on the engine. If you certify under paragraph (a)(2) of this section, use good engineering judgment to ensure that these engines are produced in the same manner as the engines you produce for your vehicles, so that your production-line testing results under subpart D of this part would apply to them.

(g) Apply the provisions of 40 CFR part 1068 for engines certified under this section as if they were subject to engine-based standards. For example, you may rely on the provisions of 40 CFR 1068.261 to have vehicle manufacturers install catalysts that you describe in your application for certification.

[70 FR 40489, July 13, 2005, as amended at 75 FR 23023, Apr. 30, 2010]

§ 1051.25 What requirements apply when installing certified engines in recreational vehicles?

(a) If you manufacture recreational vehicles with engines certified under § 1051.20, you must certify your vehicle with respect to the evaporative emission standards in § 1051.110, but you need not certify the vehicle with respect to exhaust emissions under this part. The vehicle must nevertheless meet all emission standards with the engine installed. You must also label fuel tanks and fuel lines as specified in § 1051.135(d).

(b) You must follow the engine manufacturer's emission-related installation instructions, as described in § 1051.135 and 40 CFR 1068.105. For example, you must use a fuel system that meets the permeation requirements of this part, consistent with the engine manufacturer's instructions.

(c) If you obscure the engine label while installing the engine in the vehicle such that the label cannot be read during normal maintenance, you must place a duplicate label on the vehicle as described in 40 CFR 1068.105.

[67 FR 68347, Nov. 8, 2002, as amended at 73 FR 59245, Oct. 8, 2008]

§ 1051.30 Submission of information.

(a) This part includes various requirements to record data or other information. Refer to § 1051.825 and 40 CFR 1068.25 regarding recordkeeping

requirements. Unless we specify otherwise, store these records in any format and on any media and keep them readily available for one year after you send an associated application for certification, or one year after you generate the data if they do not support an application for certification. You must promptly send us organized, written records in English if we ask for them. We may review them at any time.

(b) The regulations in § 1051.255 and 40 CFR 1068.101 describe your obligation to report truthful and complete information and the consequences of failing to meet this obligation. This includes information not related to certification.

(c) Send all reports and requests for approval to the Designated Compliance Officer (*see* § 1051.801).

(d) Any written information we require you to send to or receive from another company is deemed to be a required record under this section. Such records are also deemed to be submissions to EPA. We may require you to send us these records whether or not you are a certificate holder.

[75 FR 23023, Apr. 30, 2010]

Subpart B—Emission Standards and Related Requirements

§ 1051.101 What emission standards and other requirements must my vehicles meet?

(a) You must show that your vehicles meet the following:

(1) The applicable exhaust emission standards in § 1051.103, § 1051.105, § 1051.107, or § 1051.145.

(i) For snowmobiles, see § 1051.103.

(ii) For off-highway motorcycles, see § 1051.105.

(iii) For all-terrain vehicles and offroad utility vehicles subject to this part, see § 1051.107 and § 1051.145.

(2) The evaporative emission standards in § 1051.110.

(3) All the requirements in § 1051.115.

(b) The certification regulations in subpart C of this part describe how you make this showing.

(c) These standards and requirements apply to all testing, including certification, production-line, and in-use testing.

(d) Other sections in this subpart describe other requirements for manufacturers such as labeling or warranty requirements.

(e) It is important that you read § 1051.145 to determine if there are other interim requirements or interim compliance options that apply for a limited time.

(f) As described in § 1051.1(a)(4), offroad utility vehicles that are subject to this part are subject to the same requirements as ATVs.

[67 FR 68347, Nov. 8, 2002, as amended at 70 FR 40487, July 13, 2005]

§ 1051.103 What are the exhaust emission standards for snowmobiles?

(a) Apply the exhaust emission standards in this section by model year. Measure emissions with the snowmobile test procedures in subpart F of this part.

(1) Follow Table 1 of this section for exhaust emission standards. You may generate or use emission credits under the averaging, banking, and trading (ABT) program for HC and CO emissions, as described in subpart H of this part. This requires that you specify a family emission limit for each pollutant you include in the ABT program for each engine family. These family emission limits serve as the emission standards for the engine family with respect to all required testing instead of the standards specified in this section. An engine family meets emission standards even if its family emission limit is higher than the standard, as long as you show that the whole averaging set of applicable engine families meets the applicable emission standards using emission credits, and the vehicles within the family meet the family emission limit. The phase-in values specify the percentage of your U.S.-directed production that must comply with the emission standards for those model years. Calculate this compliance percentage based on a simple count of your U.S.-directed production units within each certified engine family compared with a simple count of your total U.S.-directed production units. Table 1 also shows the maximum value you may specify for a family emission limit, as follows:

TABLE 1 OF § 1051.103—EXHAUST EMISSION STANDARDS FOR SNOWMOBILES (G/KW-HR)

Phase	Model year	Phase-in (percent)	Emission standards		Maximum allowable family emission limits	
			HC	CO	HC	CO
Phase 1	2006	50	100	275		
Phase 1	2007–2009	100	100	275		
Phase 2	2010 and 2011	100	75	275		
Phase 3	2012 and later	100	([1])	([1])	150	400

[1] See § 1051.103(a)(2).

(2) For Phase 3, the HC and CO standards are defined by a functional relationship. Choose your corporate average HC and CO standards for each year according to the following criteria:

(i) Prior to production, select the HC standard and CO standard (specified as g/kW-hr) so that the combined percent reduction from baseline emission levels is greater than or equal to 100 percent; that is, that the standards comply with the following equation:

$$\left(1-\frac{HC_{STD}}{150}\right)\times 100+\left(1-\frac{CO_{STD}}{400}\right)\times 100\geq 100$$

(ii) Your corporate average HC standard may not be higher than 75 g/kW-hr.

(iii) Your corporate average CO standard may not be higher than 275 g/kW-hr.

(iv) You may use the averaging and banking provisions of subpart H of this part to show compliance with these HC and CO standards at the end of the model year under paragraph (a)(2)(i) of this section. You must comply with these final corporate average emission standards.

(b) The exhaust emission standards in this section apply for snowmobiles using the fuel type on which they are designed to operate. You must meet the numerical emission standards for hydrocarbons in this section based on the following types of hydrocarbon emissions for snowmobiles powered by the following fuels:

(1) Natural gas-fueled snowmobiles: NMHC emissions.

(2) Alcohol-fueled snowmobiles: THCE emissions.

(3) Other snowmobiles: THC emissions.

(c) Your snowmobiles must meet emission standards over their full useful life. The minimum useful life is 8,000 kilometers, 400 hours of engine operation, or five calendar years, whichever comes first. You must specify a longer useful life in terms of kilometers and hours for the engine family if the average service life of your vehicles is longer than the minimum value, as follows:

(1) Except as allowed by paragraph (c)(2) of this section, your useful life (in kilometers and hours) may not be less than either of the following:

(i) Your projected operating life from advertisements or other marketing materials for any vehicles in the engine family.

(ii) Your basic mechanical warranty for any engines in the engine family.

(2) Your useful life may be based on the average service life of vehicles in the engine family if you show that the average service life is less than the useful life required by paragraph (c)(1) of this section, but more than the minimum useful life (8,000 kilometers or 400 hours of engine operation). In determining the actual average service life of vehicles in an engine family, we will consider all available information and

analyses. Survey data is allowed but not required to make this showing.

[67 FR 68347, Nov. 8, 2002, as amended at 70 FR 40487, July 13, 2005; 73 FR 35951, June 25, 2008; 73 FR 59246, Oct. 8, 2008]

§ 1051.105 What are the exhaust emission standards for off-highway motorcycles?

(a) Apply the exhaust emission standards in this section by model year. Measure emissions with the off-highway motorcycle test procedures in subpart F of this part.

(1) Follow Table 1 of this section for exhaust emission standards. You may generate or use emission credits under the averaging, banking, and trading (ABT) program for $HC+NO_X$ and CO emissions, as described in subpart H of this part. This requires that you specify a family emission limit for each pollutant you include in the ABT program for each engine family. These family emission limits serve as the emission standards for the engine family with respect to all required testing instead of the standards specified in this section. An engine family meets emission standards even if its family emission limit is higher than the standard, as long as you show that the whole averaging set of applicable engine families meets the applicable emission standards using emission credits, and the vehicles within the family meet the family emission limit. The phase-in values specify the percentage of your U.S.-directed production that must comply with the emission standards for those model years. Calculate this compliance percentage based on a simple count of your U.S.-directed production units within each certified engine family compared with a simple count of your total U.S.-directed production units. Table 1 follows:

TABLE 1 OF § 1051.105—EXHAUST EMISSION STANDARDS FOR OFF-HIGHWAY MOTORCYCLES (G/KM)

Phase	Model year	Phase-in (percent)	Emission standards		Maximum allowable family emission limits	
			$HC+NO_X$	CO	$HC+NO_X$	CO
Phase 1	2006	50	2.0	25	20.0	50
	2007 and later	100	2.0	25	20.0	50

(2) For model years 2007 and later you may choose to certify all of your off-highway motorcycles to an $HC+NO_X$ standard of 4.0 g/km and a CO standard of 35 g/km, instead of the standards listed in paragraph (a)(1) of this section. To certify to the standards in this paragraph (a)(2), you must comply with the following provisions:

(i) You may not request an exemption for any off-highway motorcycles under § 1051.620

(ii) At least ten percent of your off-highway motorcycles for the model year must have four of the following features:

(A) The absence of a headlight or other lights.

(B) The absence of a spark arrestor.

(C) The absence of manufacturer warranty.

(D) Suspension travel greater than 10 inches.

(E) Engine displacement greater than 50 cc.

(F) The absence of a functional seat.

(iii) You may use the averaging and banking provisions of subpart H of this part to show compliance with this $HC+NO_X$ standard, but not this CO standard. If you use the averaging or banking provisions to show compliance, your FEL for $HC+NO_X$ may not exceed 8.0 g/km for any engine family. You may not use the trading provisions of subpart H of this part.

(3) You may certify off-highway motorcycles with engines that have total displacement of 70 cc or less to the exhaust emission standards in § 1051.615 instead of certifying them to the exhaust emission standards of this section. Count all such vehicles in the phase-in (percent) requirements of this section.

(b) The exhaust emission standards in this section apply for off-highway motorcycles using the fuel type on which they are designed to operate.

You must meet the numerical emission standards for hydrocarbons in this section based on the following types of hydrocarbon emissions for off-highway motorcycles powered by the following fuels:

(1) Natural gas-fueled off-highway motorcycles: NMHC emissions.

(2) Alcohol-fueled off-highway motorcycles: THCE emissions.

(3) Other off-highway motorcycles: THC emissions.

(c) Your off-highway motorcycles must meet emission standards over their full useful life. For off-highway motorcycles with engines that have total displacement greater than 70 cc, the minimum useful life is 10,000 kilometers or five years, whichever comes first. For off-highway motorcycles with engines that have total displacement of 70 cc or less, the minimum useful life is 5,000 kilometers or five years, whichever comes first. You must specify a longer useful life for the engine family in terms of kilometers if the average service life of your vehicles is longer than the minimum value, as follows:

(1) Except as allowed by paragraph (c)(2) of this section, your useful life (in kilometers) may not be less than either of the following:

(i) Your projected operating life from advertisements or other marketing materials for any vehicles in the engine family.

(ii) Your basic mechanical warranty for any engines in the engine family.

(2) Your useful life may be based on the average service life of vehicles in the engine family if you show that the average service life is less than the useful life required by paragraph (c)(1) of this section, but more than the minimum useful life (10,000 kilometers). In determining the actual average service life of vehicles in an engine family, we will consider all available information and analyses. Survey data is allowed but not required to make this showing.

[67 FR 68347, Nov. 8, 2002, as amended at 70 FR 40487, July 13, 2005; 73 FR 59246, Oct. 8, 2008]

§ 1051.107 What are the exhaust emission standards for all-terrain vehicles (ATVs) and offroad utility vehicles?

This section specifies the exhaust emission standards that apply to ATVs. As is described in § 1051.1(a)(4), offroad utility vehicles that are subject to this part are subject to these same standards.

(a) Apply the exhaust emission standards in this section by model year. Measure emissions with the ATV test procedures in subpart F of this part.

(1) Follow Table 1 of this section for exhaust emission standards. You may generate or use emission credits under the averaging, banking, and trading (ABT) program for $HC+NO_X$ emissions, as described in subpart H of this part. This requires that you specify a family emission limit for each pollutant you include in the ABT program for each engine family. These family emission limits serve as the emission standards for the engine family with respect to all required testing instead of the standards specified in this section. An engine family meets emission standards even if its family emission limit is higher than the standard, as long as you show that the whole averaging set of applicable engine families meets the applicable emission standards using emission credits, and the vehicles within the family meet the family emission limit. Table 1 also shows the maximum value you may specify for a family emission limit. The phase-in values in the table specify the percentage of your total U.S.-directed production that must comply with the emission standards for those model years.

Calculate this compliance percentage based on a simple count of your U.S.-directed production units within each certified engine family compared with a simple count of your total U.S.-directed production units. This applies to your total production of ATVs and offroad utility vehicles that are subject to the standards of this part; including both ATVs and offroad utility vehicles subject to the standards of this section and ATVs and offroad utility vehicles certified to the standards of other sections in this part 1051 (such as § 1051.615, but not including vehicles certified under other parts in this

chapter (such as 40 CFR part 90). Table 1 follows:

TABLE 1 OF § 1051.107—EXHAUST EMISSION STANDARDS FOR ATVS (G/KM)

Phase	Model year	Phase-in (percent)	Emission standards		Maximum allowable family emission limits	
			$HC+NO_X$	CO	$HC+NO_X$	CO
Phase 1	2006	50	1.5	35	20.0	
	2007 and later	100	1.5	35	20.0	

(2) You may certify ATVs with engines that have total displacement of less than 100 cc to the exhaust emission standards in § 1051.615 instead of certifying them to the exhaust emission standards of this section. Count all such vehicles in the phase-in (percent) requirements of this section.

(b) The exhaust emission standards in this section apply for ATVs using the fuel type on which they are designed to operate. You must meet the numerical emission standards for hydrocarbons in this section based on the following types of hydrocarbon emissions for ATVs powered by the following fuels:

(1) Natural gas-fueled ATVs: NMHC emissions.

(2) Alcohol-fueled ATVs: THCE emissions.

(3) Other ATVs: THC emissions.

(c) Your ATVs must meet emission standards over their full useful life. For ATVs with engines that have total displacement of 100 cc or greater, the minimum useful life is 10,000 kilometers, 1000 hours of engine operation, or five years, whichever comes first. For ATVs with engines that have total displacement of less than 100 cc, the minimum useful life is 5,000 kilometers, 500 hours of engine operation, or five years, whichever comes first. You must specify a longer useful life for the engine family in terms of kilometers and hours if the average service life of your vehicles is longer than the minimum value, as follows:

(1) Except as allowed by paragraph (c)(2) of this section, your useful life (in kilometers) may not be less than either of the following:

(i) Your projected operating life from advertisements or other marketing materials for any vehicles in the engine family.

(ii) Your basic mechanical warranty for any engines in the engine family.

(2) Your useful life may be based on the average service life of vehicles in the engine family if you show that the average service life is less than the useful life required by paragraph (c)(1) of this section, but more than the minimum useful life (10,000 kilometers or 1,000 hours of engine operation). In determining the actual average service life of vehicles in an engine family, we will consider all available information and analyses. Survey data is allowed but not required to make this showing.

[67 FR 68347, Nov. 8, 2002, as amended at 70 FR 40488, July 13, 2005; 73 FR 59246, Oct. 8, 2008]

§ 1051.110 What evaporative emission standards must my vehicles meet?

Your new vehicles that run on a volatile liquid fuel (such as gasoline) must meet the emission standards of this section over their full useful life. Note that § 1051.245 allows you to use design-based certification instead of generating new emission data.

(a) Beginning with the 2008 model year, permeation emissions from your vehicle's fuel tank(s) may not exceed 1.5 grams per square-meter per day when measured with the test procedures for tank permeation in subpart F of this part. You may generate or use emission credits under the averaging, banking, and trading (ABT) program, as described in subpart H of this part.

(b) Beginning with the 2008 model year, permeation emissions from your vehicle's fuel lines may not exceed 15 grams per square-meter per day when measured with the test procedures for fuel-line permeation in subpart F of this part. Use the inside diameter of the hose to determine the surface area of the hose.

(c) You may certify your fuel tanks and fuel lines under the provisions of 40 CFR part 1060. You may also specify in your application for certification that you are using components that have been certified by the component manufacturer.

[67 FR 68347, Nov. 8, 2002, as amended at 70 FR 40488, July 13, 2005; 73 FR 59246, Oct. 8, 2008]

§ 1051.115 What other requirements apply?

Vehicles that are required to meet the emission standards of this part must meet the following requirements:

(a) *Closed crankcase*. Crankcase emissions may not be discharged directly into the ambient atmosphere from any vehicle throughout its useful life.

(b) [Reserved]

(c) *Adjustable parameters*. Vehicles that have adjustable parameters must meet all the requirements of this part for any adjustment in the physically adjustable range. Note that parameters that control the air-fuel ratio may be treated separately under paragraph (d) of this section. An operating parameter is not considered adjustable if you permanently seal it or if it is not normally accessible using ordinary tools. We may require that you set adjustable parameters to any specification within the adjustable range during any testing, including certification testing, production-line testing, or in-use testing.

(d) *Other adjustments*. This provision applies if an experienced mechanic can change your engine's air-fuel ratio in less than one hour with a few parts whose total cost is under $50 (in 2001 dollars). Examples include carburetor jets and needles. In the case of carburetor jets and needles, your vehicle must meet all the requirements of this part for any air-fuel ratio within the adjustable range described in paragraph (d)(1) of this section.

(1) In your application for certification, specify the adjustable range of air-fuel ratios you expect to occur in use. You may specify it in terms of engine parts (such as the carburetor jet size and needle configuration as a function of atmospheric conditions).

(2) This adjustable range (specified in paragraph (d)(1) of this section) must include all air-fuel ratios between the lean limit and the rich limit, unless you can show that some air-fuel ratios will not occur in use.

(i) The lean limit is the air-fuel ratio that produces the highest engine power output (averaged over the test cycle).

(ii) The rich limit is the richest of the following air-fuel ratios:

(A) The air-fuel ratio that would result from operating the vehicle as you produce it at the specified test conditions. This paragraph (d)(2)(ii)(A) does not apply if you produce the vehicle with an unjetted carburetor so that the vehicle must be jetted by the dealer or operator.

(B) The air-fuel ratio of the engine when you do durability testing.

(C) The richest air-fuel ratio that you recommend to your customers for the applicable ambient conditions.

(3) If the air-fuel ratio of your vehicle is adjusted primarily by changing the carburetor jet size and/or needle configuration, you may submit your recommended jetting chart instead of the range of air-fuel ratios required by paragraph (d)(1) of this section if the following criteria are met:

(i) Good engineering judgment indicates that vehicle operators would not have an incentive to operate the vehicle with richer air-fuel ratios than recommended.

(ii) The chart is based on use of a fuel that is equivalent to the specified test fuel(s). As an alternative you may submit a chart based on a representative in-use fuel if you also provide instructions for converting the chart to be applicable to the test fuel(s).

(iii) The chart is specified in units that are adequate to make it practical for an operator to keep the vehicle properly jetted during typical use. For example, charts that specify jet sizes based on increments of temperature smaller than 20 °F (11.1 °C) or increments of altitude less than 2000 feet would not meet this criteria. Temperature ranges must overlap by at least 5 °F (2.8 °C).

(iv) You follow the jetting chart for durability testing.

(v) You do not produce your vehicles with jetting richer than the jetting chart recommendation for the intended vehicle use.

(vi) The adjustable range of carburetor screws, such as air screw, fuel screw, and idle-speed screw must be defined by stops, limits, or specification on the jetting chart consistent with the requirements for specifying jet sizes and needle configuration in this section.

(4) We may require you to adjust the engine to any specification within the adjustable range during certification testing, production-line testing, selective enforcement auditing, or in-use testing. If we allow you to submit your recommended jetting chart instead of the range of air-fuel ratios required by paragraph (d)(1) of this section, adjust the engine to the richest specification within the jetting chart for the test conditions, unless we specify a leaner setting. We may not specify a setting leaner than that described in paragraph (d)(2)(i) of this section.

(e) *Prohibited controls.* You may not design your engines with emission-control devices, systems, or elements of design that cause or contribute to an unreasonable risk to public health, welfare, or safety while operating. For example, this would apply if the engine emits a noxious or toxic substance it would otherwise not emit that contributes to such an unreasonable risk.

(f) *Defeat devices.* You may not equip your vehicles with a defeat device. A defeat device is an auxiliary emission-control device that reduces the effectiveness of emission controls under conditions that the vehicle may reasonably be expected to encounter during normal operation and use. This does not apply to auxiliary emission-control devices you identify in your certification application if any of the following is true:

(1) The conditions of concern were substantially included in the applicable test procedures described in subpart F of this part.

(2) You show your design is necessary to prevent vehicle damage or accidents.

(3) The reduced effectiveness applies only to starting the engine.

(g) *Noise standards.* There are no noise standards specified in this part 1051. See 40 CFR Chapter I, Subchapter G, to determine if your vehicle must meet noise emission standards under another part of our regulations.

[67 FR 68347, Nov. 8, 2002, as amended at 70 FR 40488, July 13, 2005; 73 FR 59246, Oct. 8, 2008]

§ 1051.120 What emission-related warranty requirements apply to me?

(a) *General requirements.* You must warrant to the ultimate purchaser and each subsequent purchaser that the new engine, including all parts of its emission-control system, meets two conditions:

(1) It is designed, built, and equipped so it conforms at the time of sale to the ultimate purchaser with the requirements of this part.

(2) It is free from defects in materials and workmanship that may keep it from meeting these requirements.

(b) *Warranty period.* Your emission-related warranty must be valid for at least 50 percent of the vehicle's minimum useful life in kilometers or hours of engine operation (where applicable), or at least 30 months, whichever comes first. You may offer an emission-related warranty more generous than we require. The emission-related warranty for the engine may not be shorter than any published warranty you offer without charge for the engine. Similarly, the emission-related warranty for any component may not be shorter than any published warranty you offer without charge for that component. If a vehicle has no odometer, base warranty periods in this paragraph (b) only on the vehicle's age (in years). The warranty period begins when the engine is placed into service.

(c) *Components covered.* The emission-related warranty covers all components whose failure would increase an engine's emissions of any regulated pollutant, including components listed in 40 CFR part 1068, Appendix I, and components from any other system you develop to control emissions. The emission-related warranty covers these components even if another company produces the component. Your emission-related warranty does not cover components whose failure would not increase an engine's emissions of any regulated pollutant.

(d) *Limited applicability.* You may deny warranty claims under this section if the operator caused the problem through improper maintenance or use, as described in 40 CFR 1068.115. You may ask us to allow you to exclude from your emission-related warranty certified vehicles that have been used significantly for competition, especially certified motorcycles that meet at least four of the criteria in § 1051.620(b)(1).

(e) *Owners manual.* Describe in the owners manual the emission-related warranty provisions from this section that apply to the engine.

[70 FR 40489, July 13, 2005, as amended at 73 FR 59246, Oct. 8, 2008]

§ 1051.125 What maintenance instructions must I give to buyers?

Give the ultimate purchaser of each new vehicle written instructions for properly maintaining and using the vehicle, including the emission-control system. The maintenance instructions also apply to service accumulation on your emission-data vehicles, as described in § 1051.240, § 1051.245, and 40 CFR part 1065.

(a) *Critical emission-related maintenance.* Critical emission-related maintenance includes any adjustment, cleaning, repair, or replacement of critical emission-related components. This may also include additional emission-related maintenance that you determine is critical if we approve it in advance. You may schedule critical emission-related maintenance on these components if you meet the following conditions:

(1) You demonstrate that the maintenance is reasonably likely to be done at the recommended intervals on in-use vehicles. We will accept scheduled maintenance as reasonably likely to occur if you satisfy any of the following conditions:

(i) You present data showing that, if a lack of maintenance increases emissions, it also unacceptably degrades the vehicle's performance.

(ii) You present survey data showing that at least 80 percent of vehicles in the field get the maintenance you specify at the recommended intervals.

(iii) You provide the maintenance free of charge and clearly say so in your maintenance instructions.

(iv) You otherwise show us that the maintenance is reasonably likely to be done at the recommended intervals.

(2) You may not schedule critical emission-related maintenance within the minimum useful life period for aftertreatment devices, pulse-air valves, fuel injectors, oxygen sensors, electronic control units, superchargers, or turbochargers.

(3) You may ask us to approve a maintenance interval shorter than that specified in paragraph (a)(2) of this section. In your request you must describe the proposed maintenance step, recommend the maximum feasible interval for this maintenance, include your rationale with supporting evidence to support the need for the maintenance at the recommended interval, and demonstrate that the maintenance will be done at the recommended interval on in-use engines. In considering your request, we will evaluate the information you provide and any other available information to establish alternate specifications for maintenance intervals, if appropriate.

(b) *Recommended additional maintenance.* You may recommend any additional amount of maintenance on the components listed in paragraph (a) of this section, as long as you state clearly that these maintenance steps are not necessary to keep the emission-related warranty valid. If operators do the maintenance specified in paragraph (a) of this section, but not the recommended additional maintenance, this does not allow you to disqualify those vehicles from in-use testing or deny a warranty claim. Do not take these maintenance steps during service accumulation on your emission-data vehicles.

(c) *Special maintenance.* You may specify more frequent maintenance to address problems related to special situations, such as atypical engine operation. You must clearly state that this additional maintenance is associated with the special situation you are addressing. We may disapprove your maintenance instructions if we determine that you have specified special maintenance steps to address engine

operation that is not atypical, or that the maintenance is unlikely to occur in use. If we determine that certain maintenance items do not qualify as special maintenance under this paragraph (c), you may identify this as recommended additional maintenance under paragraph (b) of this section.

(d) *Noncritical emission-related maintenance.* Subject to the provisions of this paragraph (d), you may schedule any amount of emission-related inspection or maintenance that is not covered by paragraph (a) of this section (i.e., maintenance that is neither explicitly identified as critical emission-related maintenance, nor that we approve as critical emission-related maintenance). Noncritical emission-related maintenance generally includes changing spark plugs, re-seating valves, or any other emission-related maintenance on the components we specify in 40 CFR part 1068, Appendix I that is not covered in paragraph (a) of this section. You must state in the owner's manual that these steps are not necessary to keep the emission-related warranty valid. If operators fail to do this maintenance, this does not allow you to disqualify those vehicles from in-use testing or deny a warranty claim. Do not take these inspection or maintenance steps during service accumulation on your emission-data vehicles.

(e) *Maintenance that is not emission-related.* For maintenance unrelated to emission controls, you may schedule any amount of inspection or maintenance. You may also take these inspection or maintenance steps during service accumulation on your emission-data vehicles, as long as they are reasonable and technologically necessary. This might include adding engine oil, changing air, fuel, or oil filters, servicing engine-cooling systems, and adjusting idle speed, governor, engine bolt torque, valve lash, or injector lash, or adjusting chain tension, clutch position, or tire pressure. You may perform this nonemission-related maintenance on emission-data vehicles at the least frequent intervals that you recommend to the ultimate purchaser (but not the intervals recommended for severe service). You may also visually inspect test vehicles or engines, including emission-related components, as needed to ensure safe operation.

(f) *Source of parts and repairs.* State clearly on the first page of your written maintenance instructions that a repair shop or person of the owner's choosing may maintain, replace, or repair emission-control devices and systems. Your instructions may not require components or service identified by brand, trade, or corporate name. Also, do not directly or indirectly condition your warranty on a requirement that the vehicle be serviced by your franchised dealers or any other service establishments with which you have a commercial relationship. You may disregard the requirements in this paragraph (f) if you do one of two things:

(1) Provide a component or service without charge under the purchase agreement.

(2) Get us to waive this prohibition in the public's interest by convincing us the vehicle will work properly only with the identified component or service.

(g) *Payment for scheduled maintenance.* Owners are responsible for properly maintaining their vehicles. This generally includes paying for scheduled maintenance. However, manufacturers must pay for scheduled maintenance during the useful life if it meets all the following criteria:

(1) Each affected component was not in general use on similar vehicles before the 2006 model year.

(2) The primary function of each affected component is to reduce emissions.

(3) The cost of the scheduled maintenance is more than 2 percent of the price of the vehicle.

(4) Failure to perform the maintenance would not cause clear problems that would significantly degrade the vehicle's performance.

(h) *Owners manual.* Explain the owner's responsibility for proper maintenance in the owners manual.

[70 FR 40489, July 13, 2005, as amended at 73 FR 59246, Oct. 8, 2008; 75 FR 23023, Apr. 30, 2010]

§ 1051.130 What installation instructions must I give to vehicle manufacturers?

(a) If you sell an engine for someone else to install in a piece of nonroad equipment, give the engine installer instructions for installing it consistent with the requirements of this part. Include all information necessary to ensure that an engine will be installed in its certified configuration.

(b) Make sure these instructions have the following information:

(1) Include the heading: ''Emission-related installation instructions''.

(2) State: ''Failing to follow these instructions when installing a certified engine in a piece of nonroad equipment violates federal law (40 CFR 1068.105(b)), subject to fines or other penalties as described in the Clean Air Act.''.

(3) Describe the instructions needed to properly install the exhaust system and any other components. Include instructions consistent with the requirements of § 1051.205(r).

(4) Describe the steps needed to comply with the evaporative emission standards in § 1051.110.

(5) Describe any limits on the range of applications needed to ensure that the engine operates consistently with your application for certification. For example, if your engines are certified only to the snowmobile standards, tell vehicle manufacturers not to install the engines in other vehicles.

(6) Describe any other instructions to make sure the installed engine will operate according to design specifications in your application for certification. This may include, for example, instructions for installing aftertreatment devices when installing the engines.

(7) State: ''If you install the engine in a way that makes the engine's emission contro information label hard to read during normal engine maintenance, you must place a duplicate label on the vehicle, as described in 40 CFR 1068.105.''.

(c) You do not need installation instructions for engines you install in your own vehicles.

(d) Provide instructions in writing or in an equivalent format. For example, you may post instructions on a publicly available Web site for downloading or printing. If you do not provide the instructions in writing, explain in your application for certification how you will ensure that each installer is informed of the installation requirements.

[70 FR 40490, July 13, 2005]

§ 1051.135 How must I label and identify the vehicles I produce?

Each of your vehicles must have three labels: a vehicle identification number as described in paragraph (a) of this section, an emission control information label as described in paragraphs (b) through (e) of this section, and a consumer information label as described in § 1051.137.

(a) Assign each vehicle a unique identification number and permanently affix, engrave, or stamp it on the vehicle in a legible way.

(b) At the time of manufacture, affix a permanent and legible emission control information label identifying each vehicle. The label must be

(1) Attached so it is not removable without being destroyed or defaced.

(2) Secured to a part of the vehicle (or engine) needed for normal operation and not normally requiring replacement.

(3) Durable and readable for the vehicle's entire life.

(4) Written in English.

(c) The label must—

(1) Include the heading ''EMISSION CONTROL INFORMATION''.

(2) Include your full corporate name and trademark. You may identify another company and use its trademark instead of yours if you comply with the provisions of § 1051.645.

(3) Include EPA's standardized designation for engine families, as described in § 1051.230.

(4) State the engine's displacement (in liters). You may omit this from the emission control information label if the vehicle is permanently labeled with a unique model name that corresponds to a specific displacement. Also, you may omit displacement from the label if all the engines in the engine family have the same per-cylinder displacement and total displacement.

(5) State: ''THIS VEHICLE IS CERTIFIED TO OPERATE ON [specify operating fuel or fuels].''.

(6) State the date of manufacture [DAY (optional), MONTH, and YEAR]; however, you may omit this from the label if you stamp, engrave, or otherwise permanently identify it elsewhere on the vehicle or engine, in which case you must also describe in your application for certification where you will identify the date on the vehicle or engine.

(7) State the exhaust emission standards or FELs to which the vehicles are certified (in g/km or g/kW-hr). Also, state the FEL that applies for the fuel tank if it is different than the otherwise applicable standard.

(8) Identify the emission-control system. Use terms and abbreviations as described in 40 CFR 1068.45. You may omit this information from the label if there is not enough room for it and you put it in the owner's manual instead.

(9) List specifications and adjustments for engine tuneups; show the proper position for the transmission during tuneup and state which accessories should be operating.

(10) Identify the fuel type and any requirements for fuel and lubricants. You may omit this information from the label if there is not enough room for it and you put it in the owners manual instead.

(11) State the useful life for your engine family if it is different than the minimum value.

(12) State: ''THIS VEHICLE MEETS U.S. EPA REGULATIONS FOR [MODEL YEAR] [SNOWMOBILES or OFF–ROAD MOTORCYCLES or ATVs or OFFROAD UTILITY VEHICLES].''

(13) Identify evaporative emission controls as specified in 40 CFR 1060.135.

(d) You may add information to the emission control information label to identify other emission standards that the vehicle meets or does not meet (such as California standards). You may also add other information to ensure that the engine will be properly maintained and used.

(e) You may ask us to approve modified labeling requirements in this part 1051 if you show that it is necessary or appropriate. We will approve your request if your alternate label is consistent with the requirements of this part.

(f) [Reserved]

(g) Label every vehicle certified under this part with a removable hang-tag showing its emission characteristics relative to other models, as described in § 1051.137.

[70 FR 40490, July 13, 2005, as amended at 59246, Oct. 8, 2008; 75 FR 23024, Apr. 30, 2010]

§ 1051.137 What are the consumer labeling requirements?

Label every vehicle certified under this part with a removable hang-tag showing its emission characteristics relative to other models. The label should be attached securely to the vehicle before it is offered for sale in such a manner that it would not be accidentally removed prior to sale. Use the applicable equations of this section to determine the normalized emission rate (NER) from the FEL for your vehicle. If the vehicle is certified without a family emission limit that is different than the otherwise applicable standard, use the final deteriorated emission level. Round the resulting normalized emission rate for your vehicle to one decimal place. If the calculated NER value is less than zero, consider NER to be zero for that vehicle. We may specify a standardized format for labels. At a minimum, the tag should include: the manufacturer's name, vehicle model name, engine description (500 cc two-stroke with DFI), the NER, and a brief explanation of the scale (for example, note that 0 is the cleanest and 10 is the least clean).

(a) For snowmobiles, use the following equation:

$$NER = 16.61 \times \log (2.667 \times HC + CO) - 38.22$$

Where:

HC and CO are the cycle-weighted FELs (or emission rates) for hydrocarbons and carbon monoxide in g/kW-hr.

(b) For off-highway motorcycles, use the following equations:

(1) For off-highway motorcycles certified to the standards in § 1051.105, use one of the equations specified below.

(i) If the vehicle has HC + NO_X emissions less than or equal to 2.0 g/km, use the following equation:

$$NER = 2.500 \times (HC+NO_X)$$

Where:

$HC+NO_X$ is the FEL (or the sum of the cycle-weighted emission rates) for hydrocarbons and oxides of nitrogen in g/km.

(ii) If the vehicle has HC + NO_X emissions greater than 2.0 g/km, use the following equation:

$$NER = 5.000 \times \log(HC+NO_X) + 3.495$$

Where:

$HC+NO_X$ is the FEL (or the sum of the cycle-weighted emission rates) for hydrocarbons and oxides of nitrogen in g/km.

(2) For off-highway motorcycles certified to the standards in §1051.615(b), use the following equation:

$$NER = 8.782 \times \log(HC+NO_X) - 5.598$$

Where:

$HC+NO_X$ is the FEL (or the sum of the cycle-weighted emission rates) for hydrocarbons and oxides of nitrogen in g/kW-hr.

(c) For ATVs, use the following equations:

(1) For ATVs certified to the standards in §1051.107, use one of the equations specified below.

(i) If the vehicle has HC + NO_X emissions less than or equal to 1.5 g/km, use the following equation:

$$NER = 3.333 \times (HC+NO_X)$$

Where:

$HC+NO_X$ is the FEL (or the sum of the cycle-weighted emission rates) for hydrocarbons and oxides of nitrogen in g/km.

(ii) If the vehicle has HC + NO_X emissions greater than 1.5 g/km, use the following equation:

$$NER = 4.444 \times \log(HC+NO_X) + 4.217$$

Where:

$HC+NO_X$ is the FEL (or the sum of the cycle-weighted emission rates) for hydrocarbons and oxides of nitrogen in g/km.

(2) For ATVs certified to the standards in §1051.615(a), use the following equation:

$$NER = 8.782 \times \log(HC + NO_X) - 7.277$$

Where:

$HC+NO_X$ is the FEL (or the sum of the cycle-weighted emission rates) for hydrocarbons and oxides of nitrogen in g/kW-hr.

[70 FR 40491, July 13, 2005, as amended at 73 FR 59246, Oct. 8, 2008]

§1051.140 What is my vehicle's maximum engine power and displacement?

This section describes how to quantify your vehicle's maximum engine power and displacement for the purposes of this part.

(a) An engine configuration's maximum engine power is the maximum brake power point on the nominal power curve for the engine configuration, as defined in this section. Round the power value to the nearest 0.5 kilowatts. The nominal power curve of an engine configuration is the relationship between maximum available engine brake power and engine speed for an engine, using the mapping procedures of 40 CFR part 1065, based on the manufacturer's design and production specifications for the engine. This information may also be expressed by a torque curve that relates maximum available engine torque with engine speed.

(b) An engine configuration's displacement is the intended swept volume of the engine rounded to the nearest cubic centimeter. The swept volume of the engine is the product of the internal cross-section area of the cylinders, the stroke length, and the number of cylinders. For example, for a one-cylinder engine with a circular cylinder having an internal diameter of 6.00 cm and a 6.25 cm stroke length, the rounded displacement would be: $(1) \times (6.00/2)^2 \times (\pi) \times (6.25) = 177$ cc. Calculate the engine's intended swept volume from the design specifications for the cylinders using enough significant figures to allow determination of the displacement to the nearest 0.1 cc.

(c) The nominal power curve and intended swept volume must be within the range of the actual power curves and swept volumes of production engines considering normal production variability. If after production begins it is determined that either your nominal power curve or your intended swept volume does not represent production engines, we may require you to amend your application for certification under §1051.225.

[73 FR 59247, Oct. 8, 2008]

§ 1051.145 What provisions apply only for a limited time?

Apply the following provisions instead of others in this part for the periods and circumstances specified in this section.

(a) *Provisions for small-volume manufacturers.* Special provisions apply to you if you are a small-volume manufacturer subject to the requirements of this part. Contact us before 2006 if you intend to use these provisions.

(1) You may delay complying with otherwise applicable emission standards (and other requirements) for two model years.

(2) If you are a small-volume manufacturer of snowmobiles, only 50 percent of the models you produce (instead of all of the models you produce) must meet emission standards in the first two years they apply to you as a small-volume manufacturer, as described in paragraph (a)(1) of this section. For example, this alternate phase-in allowance would allow small-volume snowmobile manufacturers to comply with the Phase 1 exhaust standards by certifying 50 percent of their snowmobiles in 2008, 50 percent of their snowmobiles in 2009, and 100 percent in 2010.

(3) Your vehicles for model years before 2011 may be exempt from the exhaust standards of this part if you meet the following criteria:

(i) Produce your vehicles by installing engines covered by a valid certificate of conformity under 40 CFR part 90 that shows the engines meet standards for Class II engines for each engine's model year.

(ii) Do not change the engine in a way that we could reasonably expect to increase its exhaust emissions.

(iii) The engine meets all applicable requirements from 40 CFR part 90. This applies to engine manufacturers, vehicle manufacturers who use these engines, and all other persons as if these engines were not used in recreational vehicles.

(iv) Show that fewer than 50 percent of the engine family's total sales in the United States are used in recreational vehicles regulated under this part. This includes engines used in any application, without regard to which company manufactures the vehicle or equipment.

(v) If your engines do not meet the criteria listed in paragraph (a) of this section, they will be subject to the provisions of this part. Introducing these engines into commerce without a valid exemption or certificate of conformity violates the prohibitions in 40 CFR 1068.101.

(vi) Engines exempted under this paragraph (a)(3) are subject to all the requirements affecting engines under 40 CFR part 90. The requirements and restrictions of 40 CFR part 90 apply to anyone manufacturing these engines, anyone manufacturing equipment that uses these engines, and all other persons in the same manner as other engines subject to 40 CFR part 90.

(4) All vehicles produced under this paragraph (a) must be labeled according to our specifications. The label must include the following:

(i) The heading ''EMISSION CONTROL INFORMATION''.

(ii) Your full corporate name and trademark.

(iii) A description of the provisions under which this section applies to your vehicle .

(iv) Other information that we specify to you in writing.

(b) *Optional emission standards for ATVs.* To meet ATV standards for model years before 2014, you may apply the exhaust emission standards by model year in paragraph (b)(1) of this section while measuring emissions using the engine-based test procedures in 40 CFR part 1065 instead of the chassis-based test procedures in 40 CFR part 86. In model year 2014 you may apply this provision for exhaust emission engine families representing up to 50 percent of your U.S.-directed production volume. This provision is not available in the 2015 or later-model years. If you certify only one ATV exhaust emission engine family in the 2014 model year this provision is available for that family in the 2014 model year.

(1) Follow Table 1 of this section for exhaust emission standards, while meeting all the other requirements of § 1051.107. You may use emission credits to show compliance with these standards (see subpart H of this part). You

may not exchange emission credits with engine families meeting the standards in § 1051.107(a). You may also not exchange credits between engine families certified to the standards for engines above 225 cc and engine families certified to the standards for engines below 225 cc. The phase-in percentages in the table specify the percentage of your total U.S.-directed production that must comply with the emission standards for those model years (i.e., the percentage requirement does not apply separately for engine families above and below 225 cc). Table 1 follows:

TABLE 1 OF § 1051.145—OPTIONAL EXHAUST EMISSION STANDARDS FOR ATVS (g/kW-hr)

Engine displacement	Model year	Phase-in	Emission standards		Maximum allowable family emission limits
			$HC+NO_X$	CO	$HC+NO_X$
<225 cc	2006	50%	16.1	400	32.2
	2007 and later	100	16.1	400	32.2
≥225 cc	2006	50	13.4	400	26.8
	2007 and later	100	13.4	400	26.8

(2) Measure emissions by testing the engine on a dynamometer with the steady-state duty cycle described in Table 2 of this section.

(i) During idle mode, hold the speed within your specifications, keep the throttle fully closed, and keep engine torque under 5 percent of the peak torque value at maximum test speed.

(ii) For the full-load operating mode, operate the engine at its maximum fueling rate.

(iii) See part 1065 of this chapter for detailed specifications of tolerances and calculations.

(iv) Table 2 follows:

TABLE 2 OF § 1051.145—6–MODE DUTY CYCLE FOR RECREATIONAL ENGINES

Mode No.	Engine speed (percent of maximum test speed)	Torque (percent of maximum torque at test speed)	Minimum time in mode (minutes)	Weighting factors
1	85	100	5.0	0.09
2	85	75	5.0	0.20
3	85	50	5.0	0.29
4	85	25	5.0	0.30
5	85	10	5.0	0.07
6	Idle	0	5.0	0.05

(3) For ATVs certified to the standards in this paragraph (b), use the following equations to determine the normalized emission rate required by § 1051.137:

(i) For engines at or above 225 cc, use the following equation:

$$NER = 9.898 \times \log (HC+NO_X) - 4.898$$

Where:

$HC + NO_X$ is the sum of the cycle-weighted emission rates for hydrocarbons and oxides of nitrogen in g/kW-hr.

(ii) For engines below 225 cc, use the following equation:

$$NER = 9.898 \times \log [(HC+NO_X) \times 0.83] - 4.898$$

Where:

$HC + NO_X$ is the sum of the cycle-weighted emission rates for hydrocarbons and oxides of nitrogen in g/kW-hr.

(c) [Reserved]

(d) *Phase-in flexibility*. For model years before 2014, if you make a good faith effort to comply, but fail to meet the sales requirements of this part during a phase-in period for new standards, or fail to meet the average emission standards, we may approve an alternative remedy to offset the emission reduction deficit using future emission

credits under this part. To apply for this, you must:

(1) Submit a plan during the certification process for the first model year of the phase-in showing how you project to meet the sales requirement of the phase-in.

(2) Notify us less than 30 days after you determine that you are likely to fail to comply with the sales requirement of the phase-in.

(3) Propose a remedy that will achieve equivalent or greater emission reductions compared to the specified phase-in requirements, and that will offset the deficit within one model year.

(e) *Raw sampling procedures.* Using good engineering judgment, you may use the alternate raw-sampling procedures instead of the procedures described in 40 CFR part 1065 for emission testing certain vehicles, as follows:

(1) *Snowmobile.* You may use the raw sampling procedures described in 40 CFR part 90 or 91 for snowmobiles subject to Phase 1 or Phase 2 standards.

(2) *ATV.* You may use the raw sampling procedures described in 40 CFR part 90 or 91 for ATVs certified using engine-based test procedures as specified in §1051.615 before the 2015 model year. You may use these raw sampling procedures for any ATVs certified using engine-based test procedures as specified in paragraph (b) of this section.

(f) *Early credits.* Snowmobile manufacturers may generate early emission credits in one of the following ways, by certifying some or all of their snowmobiles prior to 2006. Credit generating snowmobiles must meet all other applicable requirements of this part. No early credits may be generated by off-highway motorcycles or ATVs.

(1) You may certify one or more snowmobile engine families to FELs (HC and CO) below the numerical level of the Phase 2 standards prior to the date when compliance with the Phase 1 standard is otherwise required. Credits are calculated relative to the Phase 2 standards. Credits generated under this paragraph (f)(1) may be used at any time before 2012.

(2) You may certify a snowmobile engine family to FELs (HC and CO) below the numerical level of the Phase 1 standards prior to the date when compliance with the Phase 1 standard is otherwise required. Credits are calculated relative to the Phase 1 standards. Credits generated under this paragraph (f)(2) may only be used for compliance with the Phase 1 standards. You may generate credits under this paragraph (f)(2) without regard to whether the FELs are above or below the numerical level of the Phase 2 standards.

(g) *Pull-ahead option for permeation emissions.* Manufacturers choosing to comply with an early tank permeation standard of 3.0 g/m²/day prior to model year 2008 may be allowed to delay compliance with the 1.5 g/m²/day standard by earning credits, as follows:

(1) Calculate earned credits using the following equation:

$$\text{Credit} = (\text{Baseline emissions} - \text{Pull-ahead level}) \times \left[\Sigma_i(\text{Production})_i \times (\text{UL})_i\right]$$

Where:

Baseline emissions = the baseline emission rate, as determined in paragraph (g)(2) of this section.

Pull-ahead level = the permeation level to which you certify the tank, which must be at or below 3.0 g/m²/day.

$(\text{Production})_i$ = the annual production volume of vehicles in the engine family for model year ''i'' times the average internal surface area of the vehicles' fuel tanks.

$(\text{UL})_i$ = The useful life of the engine family in model year ''i''.

(2) Determine the baseline emission level for calculating credits using any of the following values:

(i) 7.6 g/m²/day.

(ii) The emission rate measured from your lowest-emitting, uncontrolled fuel tank from the current or previous model year using the procedures in §1051.515. For example, this would generally involve the fuel tank with the greatest wall thickness for a given material.

(iii) The emission rate measured from an uncontrolled fuel tank that is the same as or most similar to the model you have used during the current or previous model year. However, you may use this approach only if you use it to establish a baseline emission level for each unique tank model you produce using the procedures in §1051.515.

(3) Pull-ahead tanks under this option must be certified and must meet all applicable requirements other than those limited to compliance with the exhaust standards.

(4) You may use credits generated under this paragraph (g) as specified in subpart H of this part.

(h) *Deficit credits for permeation standards.* For 2008 through 2010 model years, you may have a negative balance of emission credits relative to the permeation emission standards at the end of each model year, subject to the following provisions:

(1) You must eliminate any credit deficit we allow under this paragraph (h) by the end of the 2011 model year. If you are unable to eliminate your credit deficit by the end of the 2011 model year, we may void the certificates for all families certified to FELs above the allowable average, for all affected model years.

(2) State in your application for certification a statement whether you will have a negative balance of permeation emission credits for that model year. If you project that you will have a negative balance, estimate the credit deficit for each affected model year and present a detailed plan to show where and when you will get credits to offset the deficit by the end of the 2011 model year.

(3) In your end-of-year report under § 1051.730, state whether your credit deficit is larger or smaller than you projected in your application for certification. If the deficit is larger than projected, include in your end-of-year report an update to your detailed plan to show how you will eliminate the credit deficit by the end of the 2011 model year.

(i) *Delayed compliance with labeling requirements.* Before the 2010 model year, you may omit the date of manufacture from the emission control information label if you keep those records and provide them to us upon request. Before the 2010 model year, you may also omit the label information specified for evaporative emission controls.

[67 FR 68347, Nov. 8, 2002, as amended at 70 FR 40491, July 13, 2005; 72 FR 20735, Apr. 26, 2007; 73 FR 59247, Oct. 8, 2008]

Subpart C—Certifying Engine Families

§ 1051.201 What are the general requirements for obtaining a certificate of conformity?

(a) You must send us a separate application for a certificate of conformity for each engine family. A certificate of conformity is valid starting with the indicated effective date, but it is not valid for any production after December 31 of the model year for which it is issued. No certificate will be issued after December 31 of the model year.

(b) The application must contain all the information required by this part and must not include false or incomplete statements or information (see § 1051.255).

(c) We may ask you to include less information than we specify in this subpart, as long as you maintain all the information required by § 1051.250.

(d) You must use good engineering judgment for all decisions related to your application (see 40 CFR 1068.5).

(e) An authorized representative of your company must approve and sign the application.

(f) See § 1051.255 for provisions describing how we will process your application.

(g) We may require you to deliver your test vehicles or engines to a facility we designate for our testing (see § 1051.235(c)).

(h) For vehicles that become new after being placed into service, such as vehicles converted to run on a different fuel, we may specify alternate certification provisions consistent with the intent of this part. *See* § 1051.650 and the definition of ''new'' in § 1051.801.

[70 FR 40492, July 13, 2005, as amended at 73 FR 59248, Oct. 8, 2008; 75 FR 23024, Apr. 30, 2010]

§ 1051.205 What must I include in my application?

This section specifies the information that must be in your application, unless we ask you to include less information under § 1051.201(c). We may require you to provide additional information to evaluate your application.

(a) Describe the engine family's specifications and other basic parameters

of the vehicle's design and emission controls. List the fuel type on which your engines are designed to operate (for example, gasoline, liquefied petroleum gas, methanol, or natural gas). List vehicle configurations and model names that are included in the engine family.

(b) Explain how the emission control systems operate. Describe the evaporative emission controls. Also describe in detail all system components for controlling exhaust emissions, including all auxiliary emission control devices (AECDs) and all fuel-system components you will install on any production or test vehicle or engine. Identify the part number of each component you describe. For this paragraph (b), treat as separate AECDs any devices that modulate or activate differently from each other. Include sufficient detail to allow us to evaluate whether the AECDs are consistent with the defeat device prohibition of § 1051.115.

(c) [Reserved]

(d) Describe the vehicles or engines you selected for testing and the reasons for selecting them.

(e) Describe the test equipment and procedures that you used, including any special or alternate test procedures you used (see § 1051.501).

(f) Describe how you operated the emission-data vehicle before testing, including the duty cycle and the extent of engine operation used to stabilize emission levels. Explain why you selected the method of service accumulation. Describe any scheduled maintenance you did.

(g) List the specifications of the test fuel to show that it falls within the required ranges we specify in 40 CFR part 1065.

(h) Identify the engine family's useful life.

(i) Include the maintenance instructions you will give to the ultimate purchaser of each new vehicle (see § 1051.125).

(j) Include the emission-related installation instructions you will provide if someone else installs your engines in a vehicle (see § 1051.130).

(k) Describe the labels you create to meet the requirements of § 1051.135.

(l) Identify the exhaust emission standards or FELs to which you are certifying engines in the engine family.

(m) Identify the engine family's deterioration factors and describe how you developed them (see § 1051.243 and § 1051.245). Present any emission test data you used for this.

(n) State that you operated your emission-data vehicles as described in the application (including the test procedures, test parameters, and test fuels) to show you meet the requirements of this part.

(o) Present emission data to show that you meet emission standards, as follows:

(1) Present exhaust emission data for hydrocarbons (such as NMHC or THCE, as applicable), NO_X, and CO on an emission-data vehicle to show your vehicles meet the exhaust emission standards as specified in subpart B of this part. Show emission figures before and after applying deterioration factors for each vehicle or engine. If we specify more than one grade of any fuel type (for example, a summer grade and winter grade of gasoline), you need to submit test data only for one grade unless the regulations of this part specify otherwise for your engine.

(2) Present evaporative test data for hydrocarbons to show your vehicles meet the evaporative emission standards we specify in subpart B of this part. Show emission figures before and after applying deterioration factors for each vehicle or engine, where applicable. If you did not perform the testing, identify the source of the test data.

(3) Note that § 1051.235 and § 1051.245 allow you to submit an application in certain cases without new emission data.

(p) Report test results as follows:

(1) Report all test results involving measurement of pollutants for which emission standards apply. Include test results from invalid tests or from any other tests, whether or not they were conducted according to the test procedures of subpart F of this part. We may ask you to send other information to confirm that your tests were valid under the requirements of this part and 40 CFR parts 86 and 1065.

(2) Report measured CO_2, N_2O, and CH_4 as described in § 1051.235. Small-

volume manufacturers may omit reporting N_2O and CH_4.

(q) Describe all adjustable operating parameters (see § 1051.115(e)), including production tolerances. Include the following in your description of each parameter:

(1) The nominal or recommended setting.

(2) The intended physically adjustable range.

(3) The limits or stops used to establish adjustable ranges.

(4) Information showing why the limits, stops, or other means of inhibiting adjustment are effective in preventing adjustment of parameters on in-use engines to settings outside your intended physically adjustable ranges.

(r) Confirm that your emission-related installation instructions specify how to ensure that sampling of exhaust emissions will be possible after engines are installed in equipment and placed in service. If this cannot be done by simply adding a 20-centimeter extension to the exhaust pipe, show how to sample exhaust emissions in a way that prevents diluting the exhaust sample with ambient air.

(s) Unconditionally certify that all the vehicles and/or engines in the engine family comply with the requirements of this part, other referenced parts of the CFR, and the Clean Air Act.

(t) Include good-faith estimates of U.S.-directed production volumes. Include a justification for the estimated production volumes if they are substantially different than actual production volumes in earlier years for similar models.

(u) Include the information required by other subparts of this part. For example, include the information required by § 1051.725 if you participate in the ABT program.

(v) Include other applicable information, such as information specified in this part or 40 CFR part 1068 related to requests for exemptions.

(w) Name an agent for service located in the United States. Service on this agent constitutes service on you or any of your officers or employees for any action by EPA or otherwise by the United States related to the requirements of this part.

[70 FR 40493, July 13, 2005, as amended at 73 FR 59248, Oct. 8, 2008; 74 FR 56510, Oct. 30, 2009]

§ 1051.210 May I get preliminary approval before I complete my application?

If you send us information before you finish the application, we will review it and make any appropriate determinations, especially for questions related to engine family definitions, auxiliary emission-control devices, deterioration factors, testing for service accumulation, and maintenance. Decisions made under this section are considered to be preliminary approval, subject to final review and approval. We will generally not reverse a decision where we have given you preliminary approval, unless we find new information supporting a different decision. If you request preliminary approval related to the upcoming model year or the model year after that, we will make best-efforts to make the appropriate determinations as soon as practicable. We will generally not provide preliminary approval related to a future model year more than two years ahead of time.

[70 FR 40494, July 13, 2005]

§ 1051.220 How do I amend the maintenance instructions in my application?

You may amend your emission-related maintenance instructions after you submit your application for certification as long as the amended instructions remain consistent with the provisions of § 1051.125. You must send the Designated Compliance Officer a request to amend your application for certification for an engine family if you want to change the emission-related maintenance instructions in a way that could affect emissions. In your request, describe the proposed changes to the maintenance instructions. If operators follow the original maintenance instructions rather than the newly specified maintenance, this does not allow you to disqualify those engines from in-use testing or deny a warranty claim.

(a) If you are decreasing or eliminating any specified maintenance, you

may distribute the new maintenance instructions to your customers 30 days after we receive your request, unless we disapprove your request. This would generally include replacing one maintenance step with another. We may approve a shorter time or waive this requirement.

(b) If your requested change would not decrease the specified maintenance, you may distribute the new maintenance instructions anytime after you send your request. For example, this paragraph (b) would cover adding instructions to increase the frequency of a maintenance step for engines in severe-duty applications.

(c) You need not request approval if you are making only minor corrections (such as correcting typographical mistakes), clarifying your maintenance instructions, or changing instructions for maintenance unrelated to emission control. We may ask you to send us copies of maintenance instructions revised under this paragraph (c).

[70 FR 40494, July 13, 2005, as amended at 73 FR 59248, Oct. 8, 2008; 75 FR 23024, Apr. 30, 2010]

§ 1051.225 How do I amend my application for certification to include new or modified vehicle configurations or to change an FEL?

Before we issue you a certificate of conformity, you may amend your application to include new or modified vehicle configurations, subject to the provisions of this section. After we have issued your certificate of conformity, you may send us an amended application requesting that we include new or modified vehicle configurations within the scope of the certificate, subject to the provisions of this section. You must amend your application if any changes occur with respect to any information included in your application.

(a) You must amend your application before you take any of the following actions:

(1) Add a vehicle configuration to an engine family. In this case, the vehicle configuration added must be consistent with other vehicle configurations in the engine family with respect to the criteria listed in § 1051.230.

(2) Change a vehicle configuration already included in an engine family in a way that may affect emissions, or change any of the components you described in your application for certification. This includes production and design changes that may affect emissions any time during the engine's lifetime.

(3) Modify an FEL for an engine family, as described in paragraph (f) of this section.

(b) To amend your application for certification, send the Designated Compliance Officer the following information:

(1) Describe in detail the addition or change in the vehicle model or configuration you intend to make.

(2) Include engineering evaluations or data showing that the amended engine family complies with all applicable requirements. You may do this by showing that the original emission-data vehicle is still appropriate for showing that the amended family complies with all applicable requirements.

(3) If the original emission-data vehicle for the engine family is not appropriate to show compliance for the new or modified vehicle configuration, include new test data showing that the new or modified vehicle configuration meets the requirements of this part.

(c) We may ask for more test data or engineering evaluations. You must give us these within 30 days after we request them.

(d) For engine families already covered by a certificate of conformity, we will determine whether the existing certificate of conformity covers your new or modified vehicle configuration. You may ask for a hearing if we deny your request (see § 1051.820).

(e) For engine families already covered by a certificate of conformity, you may start producing the new or modified vehicle configuration anytime after you send us your amended application, before we make a decision under paragraph (d) of this section. However, if we determine that the affected vehicles do not meet applicable requirements, we will notify you to cease production of the vehicles and may require you to recall the vehicles at no expense to the owner. Choosing

to produce vehicles under this paragraph (e) is deemed to be consent to recall all vehicles that we determine do not meet applicable emission standards or other requirements and to remedy the nonconformity at no expense to the owner. If you do not provide information required under paragraph (c) of this section within 30 days after we request it, you must stop producing the new or modified vehicle configuration.

(f) You may ask us to approve a change to your FEL in certain cases after the start of production. The changed FEL may not apply to vehicles you have already introduced into commerce, except as described in this paragraph (f). If we approve a changed FEL after the start of production, you must include the new FEL on the emission control information label for all vehicles produced after the change. You may ask us to approve a change to your FEL in the following cases:

(1) You may ask to raise your FEL for your engine family at any time. In your request, you must show that you will still be able to meet the emission standards as specified in subparts B and H of this part. If you amend your application by submitting new test data to include a newly added or modified vehicle, as described in paragraph (b)(3) of this section, use the appropriate FELs with corresponding production volumes to calculate your average emission level for the model year, as described in subpart H of this part. In all other circumstances, you must use the higher FEL for the entire family to calculate your average emission level under subpart H of this part.

(2) You may ask to lower the FEL for your engine family only if you have test data from production engines showing that the engines have emissions below the proposed lower FEL. The lower FEL applies only to engines you produce after we approve the new FEL. Use the appropriate FELs with corresponding production volumes to calculate your average emission level for the model year, as described in subpart H of this part.

[73 FR 59249, Oct. 8, 2008]

§ 1051.230 How do I select engine families?

(a) For purposes of certification, divide your product line into families of vehicles as described in this section. Except as specified in paragraph (f) of this section, you must have separate engine families for meeting exhaust and evaporative emissions. Your engine family is limited to a single model year.

(b) For exhaust emissions, group vehicles in the same engine family if they are the same in all the following aspects:

(1) The combustion cycle.

(2) The cooling system (liquid-cooled vs. air-cooled).

(3) Configuration of the fuel system (for example, port fuel injection vs. carburetion).

(4) Method of air aspiration.

(5) The number, location, volume, and composition of catalytic converters.

(6) Type of fuel.

(7) The number, arrangement (such as in-line or vee configuration), and approximate bore diameter of cylinders.

(8) Numerical level of the emission standards that apply to the vehicle. For example, an engine family may not include vehicles certified to different family emission limits, though you may change family emission limits without recertifying as specified in § 1051.225.

(c) For evaporative emissions, group vehicles in the same engine family if fuel tanks are similar and fuel lines are similar considering all the following aspects:

(1) Type of material (including additives such as pigments, plasticizers, and UV inhibitors).

(2) Emission-control strategy.

(3) Production methods. This does not apply to differences in production methods that would not affect emission characteristics.

(d) You may subdivide a group of vehicles that is identical under paragraph (b) or (c) of this section into different engine families if you show the expected emission characteristics are different during the useful life.

(e) You may group vehicles that are not identical with respect to the things

listed in paragraph (b) or (c) of this section in the same engine family, as follows:

(1) In unusual circumstances, you may group such vehicles in the same engine family if you show that their emission characteristics during the useful life will be similar.

(2) If you are a small-volume manufacturer, you may group engines from any vehicles subject to the same emission standards into a single engine family. This does not change any of the requirements of this part for showing that an engine family meets emission standards.

(f) You may divide your product line into engine families based on a combined consideration of exhaust and evaporative emission-control systems, consistent with the requirements of this section. This would allow you to use a single engine-family designation for each engine family instead of having separate engine-family designations for exhaust and evaporative emission-control systems for each model.

(g) Select test engines from the engine family as described in 40 CFR 1065.401. Select test components related to evaporative emission-control systems that are most likely to exceed the applicable emission standards. For example, select a fuel tank with the smallest average wall thickness (or barrier thickness, as appropriate) of those tanks you include in the same family.

[70 FR 40495, July 13, 2005, as amended at 73 FR 59249, Oct. 8, 2008; 75 FR 23024, Apr. 30, 2010]

§ 1051.235 What emission testing must I perform for my application for a certificate of conformity?

This section describes the emission testing you must perform to show compliance with the emission standards in subpart B of this part.

(a) Test your emission-data vehicles using the procedures and equipment specified in subpart F of this part. Where specifically required or allowed, test the engine instead of the vehicle. For evaporative emissions, test the fuel system components separate from the vehicle.

(b) Select from each engine family an emission-data vehicle, and a fuel system for each fuel type with a configuration that is most likely to exceed the emission standards, using good engineering judgment. Consider the emission levels of all exhaust constituents over the full useful life of the vehicle.

(c) We may measure emissions from any of your test vehicles or engines (or any other vehicles or engines from the engine family), as follows:

(1) We may decide to do the testing at your plant or any other facility. If we do this, you must deliver the test vehicle or engine to a test facility we designate. The test vehicle or engine you provide must include appropriate manifolds, aftertreatment devices, electronic control units, and other emission-related components not normally attached directly to the engine block. If we do the testing at your plant, you must schedule it as soon as possible and make available the instruments, personnel, and equipment we need.

(2) If we measure emissions on one of your test vehicles or engines, the results of that testing become the official emission results. Unless we later invalidate these data, we may decide not to consider your data in determining if your engine family meets applicable requirements.

(3) Before we test one of your vehicles or engines, we may set its adjustable parameters to any point within the physically adjustable ranges (see § 1051.115(c)).

(4) Before we test one of your vehicles or engines, we may calibrate it within normal production tolerances for anything we do not consider an adjustable parameter. For example, this would apply where we determine that an engine parameter is not an adjustable parameter (as defined in § 1051.801) but that it is subject to production variability.

(d) You may use previously generated emission data in the following cases:

(1) You may ask to use carryover emission data from a previous model year instead of doing new tests, but only if all the following are true:

(i) The engine family from the previous model year differs from the current engine family only with respect to model year or other characteristics unrelated to emissions. You may also ask

to add a configuration subject to § 1051.225.

(ii) The emission-data vehicle from the previous model year remains the appropriate emission-data vehicle under paragraph (b) of this section.

(iii) The data show that the emission-data vehicle would meet all the requirements that apply to the engine family covered by the application for certification.

(2) You may submit emission data for equivalent engine families performed to show compliance with other standards (such as California standards) instead of doing new tests, but only if the data show that the test vehicle or engine would meet all of this part's requirements.

(3) You may submit evaporative emission data measured by a fuel system supplier. We may require you to verify that the testing was conducted in accordance with the applicable regulations.

(e) We may require you to test a second vehicle or engine of the same or different configuration in addition to the vehicle or engine tested under paragraph (b) of this section.

(f) If you use an alternate test procedure under 40 CFR 1065.10 and later testing shows that such testing does not produce results that are equivalent to the procedures specified in subpart F of this part, we may reject data you generated using the alternate procedure.

(g) If you are a small-volume manufacturer, you may certify by design on the basis of preexisting exhaust emission data for similar technologies and other relevant information, and in accordance with good engineering judgment. In those cases, you are not required to test your vehicles. This is called ''design-certification'' or ''certifying by design.'' To certify by design, you must show that the technology used on your engines is sufficiently similar to the previously tested technology that a person reasonably familiar with emission-control technology would believe that your engines will comply with the emission standards.

(h) For fuel tanks that are certified based on permeability treatments for plastic fuel tanks, you do not need to test each engine family. However, you must use good engineering judgment to determine permeation rates for the tanks. This requires that more than one fuel tank be tested for each set of treatment conditions. You may not use test data from a given tank for any other tanks that have thinner walls. You may, however, use test data from a given tank for other tanks that have thicker walls. This applies to both low-hour (i.e., baseline testing) and durability testing. Note that § 1051.245 allows you to use design-based certification instead of generating new emission data.

(i) Measure CO_2 and CH_4 with each low-hour certification test using the procedures specified in 40 CFR part 1065 starting in the 2011 and 2012 model years, respectively. Also measure N_2O with each low-hour certification test using the analytical equipment and procedures specified in 40 CFR part 1065 starting in the 2013 model year for any engine family that depends on NOx aftertreatment to meet emission standards. Small-volume manufacturers may omit measurement of N_2O and CH_4; other manufacturers may provide appropriate data and/or information and omit measurement of N_2O and CH_4 as described in 40 CFR 1065.5. Use the same units and modal calculations as for your other results to report a single weighted value for each constituent. Round the final values as follows:

(1) Round CO_2 to the nearest 1 g/kW-hr or 1 g/km, as appropriate.

(2) Round N_2O to the nearest 0.001 g/kW-hr or 0.001 g/km, as appropriate.

(3) Round CH_4 to the nearest 0.001 g/kW-hr or 0.001 g/km, as appropriate.

[70 FR 40495, July 13, 2005, as amended at 73 FR 59249, Oct. 8, 2008; 74 FR 56510, Oct. 30, 2009]

§ 1051.240 How do I demonstrate that my engine family complies with exhaust emission standards?

(a) For purposes of certification, your engine family is considered in compliance with the applicable numerical exhaust emission standards in subpart B of this part if all emission-data vehicles representing that family have test results showing deteriorated emission levels at or below these standards. This includes all test points over the course of the durability demonstration. (Note:

if you participate in the ABT program in subpart H of this part, your FELs are considered to be the applicable emission standards with which you must comply.)

(b) Your engine family is deemed not to comply if any emission-data vehicle representing that family has test results showing a deteriorated emission level for any pollutant that is above an applicable FEL or emission standard. This includes all test points over the course of the durability demonstration.

(c) To compare emission levels from the emission-data vehicle with the applicable emission standards, apply deterioration factors to the measured emission levels. Section 1051.243 specifies how to test your vehicle to develop deterioration factors that represent the deterioration expected in emissions over your vehicle's full useful life. Your deterioration factors must take into account any available data from in-use testing with similar engines. Small-volume manufacturers may use assigned deterioration factors that we establish. Apply deterioration factors as follows:

(1) For vehicles that use aftertreatment technology, such as catalytic converters, use a multiplicative deterioration factor for exhaust emissions. A multiplicative deterioration factor is the ratio of exhaust emissions at the end of the useful life and exhaust emissions at the low-hour test point. In these cases, adjust the official emission results for each tested vehicle or engine at the selected test point by multiplying the measured emissions by the deterioration factor. If the factor is less than one, use one. Multiplicative deterioration factors must be specified to three significant figures.

(2) For vehicles that do not use aftertreatment technology, use an additive deterioration factor for exhaust emissions. An additive deterioration factor for a pollutant is the difference between exhaust emissions at the end of the useful life and exhaust emissions at the low-hour test point. In these cases, adjust the official emission results for each tested vehicle or engine at the selected test point by adding the factor to the measured emissions. If the factor is less than zero, use zero. Additive deterioration factors must be specified to one more decimal place than the applicable standard.

(d) Collect emission data using measurements to one more decimal place than the applicable standard. Apply the deterioration factor to the official emission result, as described in paragraph (c) of this section, then round the adjusted figure to the same number of decimal places as the emission standard. Compare the rounded emission levels to the emission standard for each emission-data vehicle. In the case of $HC+NO_X$ standards, add the emission results and apply the deterioration factor to the sum of the pollutants before rounding. However, if your deterioration factors are based on emission measurements that do not cover the vehicle's full useful life, apply the deterioration factor to each pollutant and then add the results before rounding.

[70 FR 40496, July 13, 2005, as amended at 73 FR 59250, Oct. 8, 2008]

§ 1051.243 How do I determine deterioration factors from exhaust durability testing?

This section describes how to determine deterioration factors, either with pre-existing test data or with new emission measurements.

(a) You may ask us to approve deterioration factors for an engine family based on emission measurements from similar vehicles or engines if you have already given us these data for certifying other vehicles in the same or earlier model years. Use good engineering judgment to decide whether the two vehicles or engines are similar. We will approve your request if you show us that the emission measurements from other vehicles or engines reasonably represent in-use deterioration for the engine family for which you have not yet determined deterioration factors.

(b) If you are unable to determine deterioration factors for an engine family under paragraph (a) of this section, select vehicles, engines, subsystems, or components for testing. Determine deterioration factors based on service accumulation and related testing to represent the deterioration expected from in-use vehicles over the full useful life, as follows:

(1) You must measure emissions from the emission-data vehicle at a low-hour

test point and the end of the useful life. You may also test at evenly spaced intermediate points.

(2) Operate the vehicle or engine over a representative duty cycle for a period at least as long as the useful life (in hours or kilometers). You may operate the vehicle or engine continuously.

(3) You may perform maintenance on emission-data vehicles as described in § 1051.125 and 40 CFR part 1065, subpart E.

(4) If you measure emissions at only two points to calculate your deterioration factor, base your calculations on a linear relationship connecting these two data points for each pollutant. If you measure emissions at three or more points, use a linear least-squares fit of your test data for each pollutant to calculate your deterioration factor.

(5) Use good engineering judgment for all aspects of the effort to establish deterioration factors under this paragraph (b).

(6) You may use other testing methods to determine deterioration factors, consistent with good engineering judgment, as long as we approve those methods in advance.

(c) Include the following information in your application for certification:

(1) If you determine your deterioration factors based on test data from a different engine family, explain why this is appropriate and include all the emission measurements on which you base the deterioration factor.

(2) If you do testing to determine deterioration factors, describe the form and extent of service accumulation, including a rationale for selecting the service-accumulation period and the method you use to accumulate hours.

[70 FR 40496, July 13, 2005, as amended at 73 FR 59250, Oct. 8, 2008]

§ 1051.245 How do I demonstrate that my engine family complies with evaporative emission standards?

(a) For purposes of certification, your engine family is considered in compliance with the evaporative emission standards in subpart B of this part if you do either of the following:

(1) You have test results showing permeation emission levels from the fuel tanks and fuel lines in the family are at or below the standards in § 1051.110 throughout the useful life.

(2) You comply with the design specifications in paragraph (e) of this section.

(b) Your engine family is deemed not to comply if any fuel tank or fuel line representing that family has test results showing a deteriorated emission level above the standard.

(c) To compare emission levels with the emission standards, apply deterioration factors to the measured emission levels. For permeation emissions, use the following procedures to establish an additive deterioration factor, as described in § 1051.240(c)(2):

(1) Section 1051.515 specifies how to test your fuel tanks to develop deterioration factors. Small-volume manufacturers may use assigned deterioration factors that we establish. Apply the deterioration factors as follows:

(i) Calculate the deterioration factor from emission tests performed before and after the durability tests as described in § 1051.515(c) and (d), using good engineering judgment. The durability tests described in § 1051.515(d) represent the minimum requirements for determining a deterioration factor. You may not use a deterioration factor that is less than the difference between evaporative emissions before and after the durability tests as described in § 1051.515(c) and (d).

(ii) Do not apply the deterioration factor to test results for tanks that have already undergone these durability tests.

(2) Determine the deterioration factor for fuel lines using good engineering judgment.

(d) Collect emission data using measurements to one more decimal place than the applicable standard. Apply the deterioration factor to the official emission result, as described in paragraph (c) of this section, then round the adjusted figure to the same number of decimal places as the emission standard. Compare the rounded emission levels to the emission standard for each emission-data vehicle.

(e) You may demonstrate for certification that your engine family complies with the evaporative emission standards by demonstrating that you use the following control technologies:

(1) For certification to the standards specified in §1051.110(a) with the control technologies shown in the following table:

TABLE 1 OF § 1051.245—DESIGN-CERTIFICATION TECHNOLOGIES FOR CONTROLLING TANK PERMEATION

If the tank permeability control technology is . . .	Then you may design-certify with a tank emission level of . . .
(i) A metal fuel tank with no non-metal gaskets or with gaskets made from a low-permeability material.	1.5 g/m²/day.
(ii) A metal fuel tank with non-metal gaskets with an exposed surface area of 1000 mm² or less.	1.5 g/m²/day.

(2) For certification to the standards specified in §1051.110(b) with the control technologies shown in the following table:

TABLE 2 OF § 1051.245—DESIGN-CERTIFICATION TECHNOLOGIES FOR CONTROLLING FUEL-LINE PERMEATION

If the fuel-line permeability control technology is . . .	Then you may design-certify with a fuel line permeation emission level of . . .
(i) Hose meeting the specifications for Low Emission Fuel Lines as described in 40 CFR 1048.105.	15 g/m²/day.
(ii) Hose meeting the R11–A or R12 permeation specifications in SAE J30 as described in 40 CFR 1060.810.	15 g/m²/day.

[67 FR 68347, Nov. 8, 2002, as amended at 69 FR 2442, Jan. 15, 2004; 70 FR 40497, July 13, 2005; 73 FR 59250, Oct. 8, 2008]

§ 1051.250 What records must I keep and make available to EPA?

(a) Send the Designated Compliance Officer information related to your U.S.-directed production volumes as described in §1051.345. In addition, within 45 days after the end of the model year, you must send us a report describing information about vehicles you produced during the model year as follows:

(1) State the total production volume for each engine family that is not subject to reporting under §1051.345.

(2) State the total production volume for any engine family for which you produce vehicles after completing the reports required in §1051.345.

(3) For production volumes you report under this paragraph (a), identify whether or not the figures include California sales. Include a separate count of production volumes for California sales if those figures are available.

(b) Organize and maintain the following records:

(1) A copy of all applications and any summary information you send us.

(2) Any of the information we specify in §1051.205 that you were not required to include in your application.

(3) A detailed history of each emission-data vehicle. For each vehicle, describe all of the following:

(i) The emission-data vehicle's construction, including its origin and buildup, steps you took to ensure that it represents production vehicles, any components you built specially for it, and all the components you include in your application for certification.

(ii) How you accumulated vehicle or engine operating hours, including the dates and the number of hours accumulated.

(iii) All maintenance, including modifications, parts changes, and other service, and the dates and reasons for the maintenance.

(iv) All your emission tests, including documentation on routine and standard tests, as specified in 40 CFR part 1065, and the date and purpose of each test.

(v) All tests to diagnose engine or emission-control performance, giving the date and time of each and the reasons for the test.

(vi) Any other significant events.

(4) Production figures for each engine family divided by assembly plant.

(5) Keep a list of engine identification numbers for all the engines you produce under each certificate of conformity.

(c) Keep data from routine emission tests (such as test cell temperatures and relative humidity readings) for one year after we issue the associated certificate of conformity. Keep all other information specified in this section for eight years after we issue your certificate.

(d) Store these records in any format and on any media, as long as you can promptly send us organized, written records in English if we ask for them.

You must keep these records readily available. We may review them at any time.

[70 FR 40497, July 13, 2005, as amended at 73 FR 59250, Oct. 8, 2008]

§ 1051.255 What decisions may EPA make regarding my certificate of conformity?

(a) If we determine your application is complete and shows that the engine family meets all the requirements of this part and the Act, we will issue a certificate of conformity for your engine family for that model year. We may make the approval subject to additional conditions.

(b) We may deny your application for certification if we determine that your engine family fails to comply with emission standards or other requirements of this part or the Clean Air Act. We will base our decision on all available information. If we deny your application, we will explain why in writing.

(c) In addition, we may deny your application or suspend or revoke your certificate if you do any of the following:

(1) Refuse to comply with any testing or reporting requirements.

(2) Submit false or incomplete information (paragraph (e) of this section applies if this is fraudulent).

(3) Render inaccurate any test data.

(4) Deny us from completing authorized activities despite our presenting a warrant or court order (see 40 CFR 1068.20). This includes a failure to provide reasonable assistance.

(5) Produce engines for importation into the United States at a location where local law prohibits us from carrying out authorized activities.

(6) Fail to supply requested information or amend your application to include all engines being produced.

(7) Take any action that otherwise circumvents the intent of the Act or this part.

(d) We may void your certificate if you do not keep the records we require or do not give us information as required under this part or the Act.

(e) We may void your certificate if we find that you intentionally submitted false or incomplete information.

(f) If we deny your application or suspend, revoke, or void your certificate, you may ask for a hearing (see § 1051.820).

[70 FR 40497, July 13, 2005, as amended at 75 FR 23024, Apr. 30, 2010]

Subpart D—Testing Production-Line Vehicles and Engines

§ 1051.301 When must I test my production-line vehicles or engines?

(a) If you produce vehicles that are subject to the requirements of this part, you must test them as described in this subpart, except as follows:

(1) Small-volume manufacturers may omit testing under this subpart.

(2) We may exempt engine families with a projected U.S.-directed production volume below 150 units from routine testing under this subpart. Request this exemption in your application for certification and include your basis for projecting a production volume below 150 units. We will approve your request if we agree that you have made good-faith estimates of your production volumes. Your exemption is approved when we grant your certificate. You must promptly notify us if your actual production exceeds 150 units during the model year. If you exceed the production limit or if there is evidence of a nonconformity, we may require you to test production-line engines under this subpart, or under 40 CFR part 1068, subpart E, even if we have approved an exemption under this paragraph (a)(2).

(b) We may suspend or revoke your certificate of conformity for certain engine families if your production-line vehicles or engines do not meet the requirements of this part or you do not fulfill your obligations under this subpart (see §§ 1051.325 and 1051.340).

(c) Other regulatory provisions authorize us to suspend, revoke, or void your certificate of conformity, or order recalls for engine families, without regard to whether they have passed these production-line testing requirements. The requirements of this subpart do not affect our ability to do selective enforcement audits, as described in part 1068 of this chapter. Individual vehicles and engines in families that pass

these production-line testing requirements must also conform to all applicable regulations of this part and part 1068 of this chapter.

(d) You may use alternate programs for testing production-line vehicles or engines in the following circumstances:

(1) You may use analyzers and sampling systems that meet the field-testing requirements of 40 CFR part 1065, subpart J, but not the otherwise applicable requirements in 40 CFR part 1065 for laboratory testing, to demonstrate compliance with emission standards if you double the minimum sampling rate specified in §1054.310(b). Use measured test results to determine whether vehicles or engines comply with applicable standards without applying a measurement allowance. This alternate program does not require prior approval but we may disallow use of this option where we determine that use of field-grade equipment would prevent you from being able to demonstrate that your vehicles or engines are being produced to conform to the specifications in your application for certification.

(2) You may ask to use another alternate program for testing production-line vehicles or engines. In your request, you must show us that the alternate program gives equal assurance that your products meet the requirements of this part. We may waive some or all of this subpart's requirements if we approve your alternate approach. For example, in certain circumstances you may be able to give us equal assurance that your products meet the requirements of this part by using less rigorous measurement methods if you offset that by increasing the number of test vehicles or engines.

(e) If you certify an engine family with carryover emission data, as described in §1051.235(d), and these equivalent engine families consistently pass the production-line testing requirements over the preceding two-year period, you may ask for a reduced testing rate for further production-line testing for that family. The minimum testing rate is one vehicle or engine per engine family. If we reduce your testing rate, we may limit our approval to any number of model years. In determining whether to approve your request, we may consider the number of vehicles or engines that have failed the emission tests.

(f) We may ask you to make a reasonable number of production-line vehicles or engines available for a reasonable time so we can test or inspect them for compliance with the requirements of this part.

(g) The requirements of this subpart do not apply to engine families certified under the provisions of §1051.630.

(h) Vehicles certified to the following standards are exempt from the production-line testing requirements of this subpart if no engine families in the averaging set have family emission limits that are different than the otherwise applicable standard:

(1) Phase I or Phase 2 standards in §1051.103

(2) Phase I standards in §1051.105

(3) Phase I standards in §1051.107.

(4) The standards in §1051.615.

(5) The standards in §1051.145.

[67 FR 68347, Nov. 8, 2002, as amended at 70 FR 40498, July 13, 2005; 73 FR 59250, Oct. 8, 2008]

§1051.305 How must I prepare and test my production-line vehicles or engines?

This section describes how to prepare and test production-line vehicles or engines. Test the engine if your vehicle is certified to g/kW-hr standards; otherwise test the vehicle. You must assemble the test vehicle or engine in a way that represents the assembly procedures for other vehicles or engines in the engine family. You must ask us to approve any deviations from your normal assembly procedures for other production vehicles or engines in the engine family.

(a) *Test procedures.* Test your production-line vehicles or engines using the applicable testing procedures in subpart F of this part to show you meet the emission standards in subpart B of this part.

(b) *Modifying a test vehicle or engine.* Once a vehicle or engine is selected for testing (see §1051.310), you may adjust, repair, prepare, or modify it or check its emissions only if one of the following is true:

(1) You document the need for doing so in your procedures for assembling

and inspecting all your production vehicles or engines and make the action routine for all the vehicles or engines in the engine family.

(2) This subpart otherwise specifically allows your action.

(3) We approve your action in advance.

(c) *Malfunction*. If a vehicle or engine malfunction prevents further emission testing, ask us to approve your decision to either repair it or delete it from the test sequence.

(d) *Setting adjustable parameters*. Before any test, we may require you to adjust any adjustable parameter to any setting within its physically adjustable range.

(1) We may require you to adjust idle speed outside the physically adjustable range as needed, but only until the vehicle or engine has stabilized emission levels (see paragraph (e) of this section). We may ask you for information needed to establish an alternate minimum idle speed.

(2) We may specify adjustments within the physically adjustable range by considering their effect on emission levels. We may also consider how likely it is that someone will make such an adjustment with in-use vehicles.

(3) We may specify an air-fuel ratio within the adjustable range specified in § 1051.115(d).

(e) *Stabilizing emission levels*. Before you test production-line vehicles or engines, you may operate the vehicle or engine to stabilize the emission levels. Using good engineering judgment, operate your vehicles or engines in a way that represents the way they will be used. You may operate each vehicle or engine for no more than the greater of two periods:

(1) 50 hours or 500 kilometers.

(2) The number of hours or kilometers you operated the emission-data vehicle used for certifying the engine family (see 40 CFR part 1065, subpart E, or the applicable regulations governing how you should prepare your test vehicle or engine).

(f) *Damage during shipment*. If shipping a vehicle or engine to a remote facility for production-line testing makes necessary an adjustment or repair, you must wait until after the initial emission test to do this work. We may waive this requirement if the test would be impossible or unsafe, or if it would permanently damage the vehicle or engine. Report to us, in your written report under § 1051.345, all adjustments or repairs you make on test vehicles or engines before each test.

(g) *Retesting after invalid tests*. You may retest a vehicle or engine if you determine an emission test is invalid under subpart F of this part. Explain in your written report reasons for invalidating any test and the emission results from all tests. If we determine that you improperly invalidated a test, we may require you to ask for our approval for future testing before substituting results of the new tests for invalid ones.

[67 FR 68347, Nov. 8, 2002, as amended at 70 FR 40498, July 13, 2005; 73 FR 59251, Oct. 8, 2008]

§ 1051.310 How must I select vehicles or engines for production-line testing?

(a) Test engines from each engine family as described in this section based on test periods, as follows:

(1) For engine families with projected U.S.-directed production volume of at least 1,600, the test periods are consecutive quarters (3 months). However, if your annual production period is less than 12 months long, you may take the following alternative approach to define quarterly test periods:

(i) If your annual production period is 120 days or less, the whole model year constitutes a single test period.

(ii) If your annual production period is 121 to 210 days, divide the annual production period evenly into two test periods.

(iii) If your annual production period is 211 to 300 days, divide the annual production period evenly into three test periods.

(iv) If your annual production period is 301 days or longer, divide the annual production period evenly into four test periods.

(2) For engine families with projected U.S.-directed production volume below 1,600, the whole model year constitutes a single test period.

(b) Early in each test period, randomly select and test an engine from

the end of the assembly line for each engine family.

(1) In the first test period for newly certified engines, randomly select and test one more engine. Then, calculate the required sample size for the model year as described in paragraph (c) of this section.

(2) In later test periods of the same model year, combine the new test result with all previous testing in the model year. Then, calculate the required sample size for the model year as described in paragraph (c) of this section.

(3) In the first test period for engine families relying on previously submitted test data, combine the new test result with the last test result from the previous model year. Then, calculate the required sample size for the model year as described in paragraph (c) of this section. Use the last test result from the previous model year only for this first calculation. For all subsequent calculations, use only results from the current model year.

(c) Calculate the required sample size for each engine family. Separately calculate this figure for HC, NO_X (or HC + NO_X), and CO. The required sample size is the greater of these calculated values. Use the following equation:

$$N = \left[\frac{(t_{95} \cdot \sigma)}{(x - STD)} \right]^2 + 1$$

Where:

N = Required sample size for the model year.

t_{95} = 95% confidence coefficient, which depends on the number of tests completed, n, as specified in the table in paragraph (c)(1) of this section. It defines 95% confidence intervals for a one-tail distribution.

σ = Test sample standard deviation (see paragraph (c)(2) of this section).

x = Mean of emission test results of the sample.

STD = Emission standard (or family emission limit, if applicable).

(1) Determine the 95% confidence coefficient, t_{95}, from the following table:

n	t_{95}	n	t_{95}	n	t_{95}
2	6.31	12	1.80	22	1.72
3	2.92	13	1.78	23	1.72
4	2.35	14	1.77	24	1.71
5	2.13	15	1.76	25	1.71
6	2.02	16	1.75	26	1.71
7	1.94	17	1.75	27	1.71
8	1.90	18	1.74	28	1.70
9	1.86	19	1.73	29	1.70
10	1.83	20	1.73	30+	1.70
11	1.81	21	1.72	.....	.....

(2) Calculate the standard deviation, σ, for the test sample using the following formula:

$$\sigma = \left[\sum \frac{(X_i - x)^2}{(n-1)} \right]^{\frac{1}{2}}$$

Where:

X_i = Emission test result for an individual vehicle or engine.

n = The number of tests completed in an engine family.

(d) Use final deteriorated test results to calculate the variables in the equations in paragraph (c) of this section (see § 1051.315(a)).

(e) After each new test, recalculate the required sample size using the updated mean values, standard deviations, and the appropriate 95-percent confidence coefficient.

(f) Distribute the remaining tests evenly throughout the rest of the year. You may need to adjust your schedule for selecting vehicles or engines if the required sample size changes. If your

scheduled quarterly testing for the remainder of the model year is sufficient to meet the calculated sample size, you may wait until the next quarter to do additional testing. Continue to randomly select vehicles or engines from each engine family.

(g) Continue testing until one of the following things happens:

(1) After completing the minimum number of tests required in paragraph (b) of this section, the number of tests completed in an engine family, n, is greater than the required sample size, N, and the sample mean, x, is less than or equal to the emission standard. For example, if N = 5.1 after the fifth test, the sample-size calculation does not allow you to stop testing.

(2) The engine family does not comply according to § 1051.315.

(3) You test 30 vehicles or engines from the engine family.

(4) You test one percent of your projected annual U.S.-directed production volume for the engine family, rounded to the nearest whole number. Do not count a vehicle or engine under this paragraph (g)(4) if it fails to meet an applicable emission standard.

(5) You choose to declare that the engine family does not comply with the requirements of this subpart.

(h) If the sample-size calculation allows you to stop testing for one pollutant but not another, you must continue measuring emission levels of all pollutants for any additional tests required under this section. However, you need not continue making the calculations specified in this subpart for the pollutant for which testing is not required. This paragraph (h) does not affect the number of tests required under this section, the required calculations in § 1051.315, or the remedial steps required under § 1051.320.

(i) You may elect to test more randomly chosen vehicles or engines than we require under this section. Include these vehicles or engines in the sample-size calculations.

[67 FR 68347, Nov. 8, 2002, as amended at 70 FR 40498, July 13, 2005; 73 FR 59251, Oct. 8, 2008]

§ 1051.315 How do I know when my engine family fails the production-line testing requirements?

This section describes the pass-fail criteria for the production-line testing requirements. We apply these criteria on an engine family basis. See § 1051.320 for the requirements that apply to individual vehicles or engines that fail a production-line test.

(a) Calculate your test results. Round them to the number of decimal places in the emission standard expressed to one more decimal place.

(1) *Initial and final test results.* Calculate and round the test results for each vehicle or engine. If you do several tests on a vehicle or engine, calculate the initial results for each test, then add all the test results together and divide by the number of tests. Round this final calculated value for the final test results on that vehicle or engine.

(2) *Final deteriorated test results.* Apply the deterioration factor for the engine family to the final test results (see § 1051.240(c)).

(3) *Round deteriorated test results.* Round the results to the number of decimal places in the emission standard expressed to one more decimal place.

(b) Construct the following CumSum Equation for each engine family for HC, NO_X (HC + NO_X), and CO emissions:

$$C_i = \text{Max}\ [0 \text{ or } C_{i-1} + X_i - (\text{STD} + 0.25 \times \sigma)]$$

Where:

C_i = The current CumSum statistic.

C_{i-1} = The previous CumSum statistic. For the first test, the CumSum statistic is 0 (i.e., $C_1 = 0$).

X_i = The current emission test result for an individual vehicle or engine.

STD = Emission standard (or family emission limit, if applicable).

(c) Use final deteriorated test results to calculate the variables in the equation in paragraph (b) of this section (see § 1051.315(a)).

(d) After each new test, recalculate the CumSum statistic.

(e) If you test more than the required number of vehicles or engines, include the results from these additional tests in the CumSum Equation.

(f) After each test, compare the current CumSum statistic, C_i, to the recalculated Action Limit, H, defined as $H = 5.0 \times \sigma$.

(g) If the CumSum statistic exceeds the Action Limit in two consecutive tests, the engine family fails the production-line testing requirements of this subpart. Tell us within ten working days if this happens. You may request to amend the application for certification to raise the FEL of the engine family as described in § 1051.225(f).

(h) If you amend the application for certification for an engine family under § 1051.225, do not change any previous calculations of sample size or CumSum statistics for the model year.

[67 FR 68347, Nov. 8, 2002, as amended at 70 FR 40499, July 13, 2005; 73 FR 59252, Oct. 8, 2008]

§ 1051.320 What happens if one of my production-line vehicles or engines fails to meet emission standards?

(a) If you have a production-line vehicle or engine with final deteriorated test results exceeding one or more emission standards (see § 1051.315(a)), the certificate of conformity is automatically suspended for that failing vehicle or engine. You must take the following actions before your certificate of conformity can cover that vehicle or engine:

(1) Correct the problem and retest the vehicle or engine to show it complies with all emission standards.

(2) Include the test results and describe the remedy for each engine in the written report required under § 1051.345.

(b) You may request to amend the application for certification to raise the FEL of the entire engine family at this point (see § 1051.225).

[67 FR 68347, Nov. 8, 2002, as amended at 73 FR 59252, Oct. 8, 2008]

§ 1051.325 What happens if an engine family fails the production-line testing requirements?

(a) We may suspend your certificate of conformity for an engine family if it fails under § 1051.315. The suspension may apply to all facilities producing vehicles or engines from an engine family, even if you find noncompliant vehicles or engines only at one facility.

(b) We will tell you in writing if we suspend your certificate in whole or in part. We will not suspend a certificate until at least 15 days after the engine family fails. The suspension is effective when you receive our notice.

(c) Up to 15 days after we suspend the certificate for an engine family, you may ask for a hearing (see § 1051.820). If we agree before a hearing occurs that we used erroneous information in deciding to suspend the certificate, we will reinstate the certificate.

(d) Section 1051.335 specifies steps you must take to remedy the cause of the engine family's production-line failure. All the vehicles you have produced since the end of the last test period are presumed noncompliant and should be addressed in your proposed remedy. We may require you to apply the remedy to engines produced earlier if we determine that the cause of the failure is likely to have affected the earlier engines.

(e) You may request to amend the application for certification to raise the FEL of the engine family before or after we suspend your certificate as described in § 1051.225(f). We will approve your request if it is clear that you used good engineering judgment in establishing the original FEL.

[67 FR 68347, Nov. 8, 2002, as amended at 70 FR 40499, July 13, 2005; 73 FR 59252, Oct. 8, 2008]

§ 1051.330 May I sell vehicles from an engine family with a suspended certificate of conformity?

You may sell vehicles that you produce after we suspend the engine family's certificate of conformity under § 1051.315 only if one of the following occurs:

(a) You test each vehicle or engine you produce and show it complies with emission standards that apply.

(b) We conditionally reinstate the certificate for the engine family. We may do so if you agree to recall all the affected vehicles and remedy any noncompliance at no expense to the owner if later testing shows that the engine family still does not comply.

§ 1051.335 How do I ask EPA to reinstate my suspended certificate?

(a) Send us a written report asking us to reinstate your suspended certificate. In your report, identify the reason for noncompliance, propose a remedy for the engine family, and commit to a date for carrying it out. In your proposed remedy include any quality control measures you propose to keep the problem from happening again.

(b) Give us data from production-line testing that shows the remedied engine family complies with all the emission standards that apply.

§ 1051.340 When may EPA revoke my certificate under this subpart and how may I sell these vehicles again?

(a) We may revoke your certificate for an engine family in the following cases:

(1) You do not meet the reporting requirements.

(2) Your engine family fails to comply with the requirements of this subpart and your proposed remedy to address a suspended certificate under § 1051.325 is inadequate to solve the problem or requires you to change the vehicle's design or emission-control system.

(b) To sell vehicles from an engine family with a revoked certificate of conformity, you must modify the engine family and then show it complies with the requirements of this part.

(1) If we determine your proposed design change may not control emissions for the vehicle's full useful life, we will tell you within five working days after receiving your report. In this case we will decide whether production-line testing will be enough for us to evaluate the change or whether you need to do more testing.

(2) Unless we require more testing, you may show compliance by testing production-line vehicles or engines as described in this subpart.

(3) We will issue a new or updated certificate of conformity when you have met these requirements.

§ 1051.345 What production-line testing records must I send to EPA?

(a) Within 30 calendar days of the end of each test period, send us a report with the following information:

(1) Describe any facility used to test production-line vehicles or engines and state its location.

(2) State the total U.S.-directed production volume and number of tests for each engine family.

(3) Describe how you randomly selected vehicles or engines.

(4) Describe each test vehicle or engine, including the engine family's identification and the vehicle's model year, build date, model number, identification number, and number of hours of operation before testing.

(5) Identify how you accumulated hours of operation on the vehicles or engines and describe the procedure and schedule you used.

(6) Provide the test number; the date, time and duration of testing; test procedure; all initial test results; final test results; and final deteriorated test results for all tests. Provide the emission results for all measured pollutants. Include information for both valid and invalid tests and the reason for any invalidation.

(7) Describe completely and justify any nonroutine adjustment, modification, repair, preparation, maintenance, or test for the test vehicle or engine if you did not report it separately under this subpart. Include the results of any emission measurements, regardless of the procedure or type of vehicle.

(8) Provide the CumSum analysis required in § 1051.315 and the sample-size calculation required in § 1051.310 for each engine family.

(9) Report on each failed vehicle or engine as described in § 1051.320.

(10) State the date the test period ended for each engine family.

(b) We may ask you to add information to your written report, so we can determine whether your new vehicles conform with the requirements of this subpart. We may also ask you to send less information.

(c) An authorized representative of your company must sign the following statement: We submit this report under Sections 208 and 213 of the Clean Air Act. Our production-line testing conformed completely with the requirements of 40 CFR part 1051. We have not changed production processes or quality-control procedures for test engines (or vehicles) in a way that

might affect emission controls. All the information in this report is true and accurate, to the best of my knowledge. I know of the penalties for violating the Clean Air Act and the regulations. (Authorized Company Representative)

(d) Send electronic reports of production-line testing to the Designated Compliance Officer using an approved information format. If you want to use a different format, send us a written request with justification for a waiver.

(e) We will send copies of your reports to anyone from the public who asks for them. See § 1051.815 for information on how we treat information you consider confidential.

[67 FR 68347, Nov. 8, 2002, as amended at 70 FR 40499, July 13, 2005; 73 FR 59253, Oct. 8, 2008]

§ 1051.350 What records must I keep?

(a) Organize and maintain your records as described in this section. We may review your records at any time.

(b) Keep paper or electronic records of your production-line testing for eight years after you complete all the testing required for an engine family in a model year.

(c) Keep a copy of the written reports described in § 1051.345.

(d) Keep the following additional records:

(1) A description of all test equipment for each test cell that you can use to test production-line vehicles or engines.

(2) The names of supervisors involved in each test.

(3) The name of anyone who authorizes adjusting, repairing, preparing, or modifying a test vehicle or engine and the names of all supervisors who oversee this work.

(4) If you shipped the vehicle or engine for testing, the date you shipped it, the associated storage or port facility, and the date the vehicle or engine arrived at the testing facility.

(5) Any records related to your production-line tests that are not in the written report.

(6) A brief description of any significant events during testing not otherwise described in the written report or in this section.

(7) Any information specified in § 1051.345 that you do not include in your written reports.

(e) If we ask, you must give us projected or actual production figures for an engine family. We may ask you to divide your production figures by maximum engine power, displacement, fuel type, or assembly plant (if you produce vehicles or engines at more than one plant).

(f) Keep records of the vehicle or engine identification number for each vehicle or engine you produce under each certificate of conformity. You may identify these numbers as a range. Give us these records within 30 days if we ask for them.

[67 FR 68347, Nov. 8, 2002, as amended at 70 FR 40499, July 13, 2005; 73 FR 59253, Oct. 8, 2008]

Subpart E—Testing In-use Engines [Reserved]

Subpart F—Test Procedures

§ 1051.501 What procedures must I use to test my vehicles or engines?

This section describes test procedures that you use to determine whether vehicles meet the emission standards of this part. See § 1051.235 to determine when testing is required for certification. See subpart D of this part for the production-line testing requirements.

(a) *Snowmobiles.* For snowmobiles, use the equipment and procedures for spark-ignition engines in 40 CFR part 1065 to determine whether your snowmobiles meet the duty-cycle emission standards in § 1051.103. Measure the emissions of all the pollutants we regulate in § 1051.103. Measure CO_2, N_2O, and CH_4 as described in § 1051.235. Use the duty cycle specified in § 1051.505.

(b) *Motorcycles and ATVs.* For motorcycles and ATVs, use the equipment, procedures, and duty cycle in 40 CFR part 86, subpart F, to determine whether your vehicles meet the exhaust emission standards in § 1051.105 or § 1051.107. Measure the emissions of all the pollutants we regulate in § 1051.105 or § 1051.107. Measure CO_2, N_2O, and CH_4 as described in § 1051.235. If we allow you to certify ATVs based on engine

testing, use the equipment, procedures, and duty cycle described or referenced in the section that allows engine testing. For motorcycles with engine displacement at or below 169 cc and all ATVs, use the driving schedule in paragraph (c) of appendix I to 40 CFR part 86. For all other motorcycles, use the driving schedule in paragraph (b) of Appendix I to part 86. With respect to vehicle-speed governors, test motorcycles and ATVs in their ungoverned configuration, unless we approve in advance testing in a governed configuration. We will only approve testing in a governed configuration if you can show that the governor is permanently installed on all production vehicles and is unlikely to be removed in use. With respect to engine-speed governors, test motorcycles and ATVs in their governed configuration. Run the test engine, with all emission-control systems operating, long enough to stabilize emission levels; you may consider emission levels stable without measurement if you accumulate 12 hours of operation.

(c) *Permeation testing.* (1) Use the equipment and procedures specified in § 1051.515 to measure fuel tank permeation emissions.

(2) Prior to permeation testing of fuel hose, the hose must be preconditioned by filling the hose with the fuel specified in paragraph (d)(3) of this section, sealing the openings, and soaking the hose for 4 weeks at 23 ± 5 °C. To measure fuel-line permeation emissions, use the equipment and procedures specified in SAE J30 as described in 40 CFR 1060.810. The measurements must be performed at 23 ± 2 °C using the fuel specified in paragraph (d)(3) of this section.

(d) *Fuels.* Use the fuels meeting the following specifications:

(1) *Exhaust.* Use the fuels and lubricants specified in 40 CFR part 1065, subpart H, for all the exhaust testing we require in this part. For service accumulation, use the test fuel or any commercially available fuel that is representative of the fuel that in-use engines will use. The following provisions apply for using specific fuel types:

(i) For gasoline-fueled engines, use the grade of gasoline specified for general testing.

(ii) For diesel-fueled engines, use either low-sulfur diesel fuel or ultra low-sulfur diesel fuel meeting the specifications in 40 CFR 1065.703. If you use sulfur-sensitive technology as defined in 40 CFR 1039.801 and you measure emissions using ultra low-sulfur diesel fuel, you must add a permanent label near the fuel inlet with the following statement: ''ULTRA LOW SULFUR FUEL ONLY''.

(2) *Fuel Tank Permeation.* (i) For the preconditioning soak described in § 1051.515(a)(1) and fuel slosh durability test described in § 1051.515(d)(3), use the fuel specified in Table 1 of 40 CFR 1065.710 blended with 10 percent ethanol by volume. As an alternative, you may use Fuel CE10, which is Fuel C as specified in ASTM D 471–98 (see 40 CFR 1060.810) blended with 10 percent ethanol by volume.

(ii) For the permeation measurement test in § 1051.515(b), use the fuel specified in Table 1 of 40 CFR 1065.710. As an alternative, you may use the fuel specified in paragraph (d)(2)(i) of this section.

(3) *Fuel Hose Permeation.* Use the fuel specified in Table 1 of 40 CFR 1065.710 blended with 10 percent ethanol by volume for permeation testing of fuel lines. As an alternative, you may use Fuel CE10, which is Fuel C as specified in ASTM D 471–98 (see 40 CFR 1060.810) blended with 10 percent ethanol by volume.

(e) *Engine stabilization.* Instead of the provisions of 40 CFR 1065.405, you may consider emission levels stable without measurement after 12 hours of engine operation.

(f) [Reserved]

(g) *Special procedures for engine testing.* (1) You may use special or alternate procedures, as described in § 1065.10 of this chapter.

(2) We may reject data you generate using alternate procedures if later testing with the procedures in part 1065 of this chapter shows contradictory emission data.

(3) You may test engines using a test speed based on the point of maximum power if that represents in-use operation better than testing based on maximum test speed.

(h) *Special procedures for vehicle testing.* (1) You may use special or alternate procedures, as described in paragraph (f)(3) of this section.

(2) We may reject data you generate using alternate procedures if later testing with the otherwise specified procedures shows contradictory emission data.

(3)(i) The test procedures specified for vehicle testing are intended to produce emission measurements equivalent to those that would result from measuring emissions during in-use operation using the same vehicle configuration. If good engineering judgment indicates that use of the procedures in this part for a vehicle would result in measurements that are not representative of in-use operation of that vehicle, you must notify us. If we determine that using these procedures would result in measurements that are significantly unrepresentative and that changes to the procedures will result in more representative measurements that do not decrease the stringency of emission standards or other requirements, we will specify changes to the procedures. In your notification to us, you should recommend specific changes you think are necessary.

(ii) You may ask to use emission data collected using other test procedures, such as those of the California Air Resources Board or the International Organization for Standardization. We will allow this only if you show us that these data are equivalent to data collected using our test procedures.

(iii) You may ask to use alternate procedures that produce measurements equivalent to those obtained using the specified procedures. In this case, send us a written request showing that your alternate procedures are equivalent to the test procedures of this part. If you prove to us that the procedures are equivalent, we will allow you to use them. You may not use alternate procedures until we approve them.

(iv) You may ask to use special test procedures if your vehicle cannot be tested using the specified test procedures (for example, it is incapable of operating on the specified transient cycle). In this case, send us a written request showing that you cannot satisfactorily test your engines using the test procedures of this part. We will allow you to use special test procedures if we determine that they would produce emission measurements that are representative of those that would result from measuring emissions during in-use operation. You may not use special procedures until we approve them.

[67 FR 68347, Nov. 8, 2002, as amended at 69 FR 2442, Jan. 15, 2004; 70 FR 40499, July 13, 2005; 73 FR 59253, Oct. 8, 2008; 74 FR 56511, Oct. 30, 2009]

§ 1051.505 What special provisions apply for testing snowmobiles?

Use the following special provisions for testing snowmobiles:

(a) You may perform steady-state testing with either discrete-mode or ramped-modal cycles. You must use the type of testing you select in your application for certification for all testing you perform for that engine family. If we test your engines to confirm that they meet emission standards, we will do testing the same way. If you submit certification test data collected with both discrete-mode and ramped-modal testing (either in your original application or in an amendment to your application), either method may be used for subsequent testing. We may also perform other testing as allowed by the Clean Air Act. Measure steady-state emissions as follows:

(1) For discrete-mode testing, sample emissions separately for each mode, then calculate an average emission level for the whole cycle using the weighting factors specified for each mode. In each mode, operate the engine for at least 5 minutes, then sample emissions for at least 1 minute. Calculate cycle statistics and compare with the established criteria as specified in 40 CFR 1065.514 to confirm that the test is valid.

(2) For ramped-modal testing, start sampling at the beginning of the first mode and continue sampling until the end of the last mode. Calculate emissions and cycle statistics the same as for transient testing as specified in 40 CFR part 1065, subpart G.

(3) Measure emissions by testing the engine on a dynamometer with one or more of the following sets of duty cycles to determine whether it meets the

steady-state emission standards in § 1051.103:

(i) The following duty cycle applies for discrete-mode testing:

TABLE 1 OF § 1051.505—5-MODE DUTY CYCLE FOR SNOWMOBILES

Mode No.	Speed (percent) [1]	Torque (percent) [2]	Minimum time in mode (minutes)	Weighting factors
1	100	100	3.0	0.12
2	85	51	3.0	0.27
3	75	33	3.0	0.25
4	65	19	3.0	0.31
5	Idle	0	3.0	0.05

[1] Percent speed is percent of maximum test speed.
[2] Percent torque is percent of maximum torque at maximum test speed.

(ii) The following duty cycle applies for ramped-modal testing:

TABLE 2 OF § 1051.505—RAMPED-MODAL CYCLE FOR TESTING SNOWMOBILES

RMC mode	Time in mode	Speed (percent) [1]	Torque (percent) [2, 3]
1a Steady-state	27	Warm Idle	0
1b Transition	20	Linear Transition	Linear Transition
2a Steady-state	121	100	100
2b Transition	20	Linear Transition	Linear Transition
3a Steady-state	347	65	19
3b Transition	20	Linear Transition	Linear Transition
4a Steady-state	305	85	51
4b Transition	20	Linear Transition	Linear Transition
5a Steady-state	272	75	33
5b Transition	20	Linear Transition	Linear Transition
6 Steady-state	28	Warm Idle	0

[1] Percent speed is percent of maximum test speed.
[2] Advance from one mode to the next within a 20-second transition phase. During the transition phase, command a linear progression from the torque setting of the current mode to the torque setting of the next mode.
[3] Percent torque is percent of maximum torque at maximum test speed.

(b) During idle mode, operate the engine at its warm idle speed as described in 40 CFR 1065.510.

(c) For the full-load operating mode, operate the engine at wide-open throttle.

(d) Ambient temperatures during testing must be between 20 °C and 30 °C (68 °F and 86 °F), or other representative test temperatures, as specified in paragraph (f) of this section.

(e) See 40 CFR part 1065 for detailed specifications of tolerances and calculations.

(f) You may test snowmobiles at ambient temperatures below 20 °C or using intake air temperatures below 20 °C if you show that such testing complies with 40 CFR 1065.10(c)(1). You must get our approval before you begin the emission testing. For example, the following approach would be appropriate to show that such testing complies with 40 CFR 1065.10(c)(1):

(1) Using good engineering judgment, instrument a representative snowmobile built with a representative engine from the family being tested with an appropriate temperature measuring device located in the intake air plenum where fuel spitback is not likely to occur.

(2) Choose a time and location with the following weather conditions: windspeed less than 10 knots, no falling precipitation, air temperature between −20 °C and 0 °C (−4 °F and 32 °F).

(3) Operate the snowmobile until its engine reaches a steady operating temperature.

(4) Operate the snowmobile on a level surface free of other vehicle traffic. Operate the snowmobile at each specified engine speed corresponding to each mode in the emissions test specific to

the engine being tested. When readings are stable, record the temperature in the intake air plenum and the ambient temperature. Calculate the temperature difference between the air in the plenum and the ambient air for each mode.

(5) Calculate the nominal intake air test temperature for each test mode as −10 °C (14 °F) plus the temperature difference for the corresponding mode determined in paragraph (f)(4) of this section.

(6) Before the emissions test, select the appropriate carburetor jetting for −10 °C (14 °F) conditions according to the jet chart. For each mode, maintain the inlet air temperature within 5 °C (9 °F) of the corresponding modal temperature calculated in paragraph (f)(5) of this section.

(7) Adjust other operating parameters to be consistent with operation at −10 °C (14 °F). For example, this may require that you modify the engine cooling system used in the laboratory to make its performance representative of cold-temperature operation.

[67 FR 68347, Nov. 8, 2002, as amended at 70 FR 40500, July 13, 2005; 73FR 59253, Oct. 8, 2008]

§ 1051.510 What special provisions apply for testing ATV engines? [Reserved]

§ 1051.515 How do I test my fuel tank for permeation emissions?

Measure permeation emissions by weighing a sealed fuel tank before and after a temperature-controlled soak.

(a) *Preconditioning fuel soak.* To precondition your fuel tank, follow these five steps:

(1) Fill the tank with the fuel specified in §1051.501(d)(2)(i), seal it, and allow it to soak at 28 ±5 °C for 20 weeks. Alternatively, the tank may be soaked for a shorter period of time at a higher temperature if you can show that the hydrocarbon permeation rate has stabilized.

(2) Determine the fuel tank's internal surface area in square-meters accurate to at least three significant figures. You may use less accurate estimates of the surface area if you make sure not to overestimate the surface area.

(3) Fill the fuel tank with the test fuel specified in §1051.501(d)(2)(ii) to its nominal capacity. If you fill the tank inside the temperature-controlled room or enclosure, do not spill any fuel.

(4) Allow the tank and its contents to equilibrate to 28 ±2 °C.

(5) Seal the fuel tank using fuel caps and other fittings (excluding petcocks) that can be used to seal openings in a production fuel tank. In cases where openings are not normally sealed on the fuel tank (such as hose-connection fittings and vents in fuel caps), these openings may be sealed using nonpermeable fittings such as metal or fluoropolymer plugs.

(b) *Permeation test run.* To run the test, take the following steps for a tank that was preconditioned as specified in paragraph (a) of this section:

(1) Weigh the sealed fuel tank and record the weight to the nearest 0.1 grams. You may use less precise weights as long as the difference in mass from the start of the test to the end of the test has at least three significant figures. Take this measurement within 8 hours of filling the tank with test fuel as specified in paragraph (a)(3) of this section.

(2) Carefully place the tank within a ventilated, temperature-controlled room or enclosure. Do not spill or add any fuel.

(3) Close the room or enclosure and record the time.

(4) Ensure that the measured temperature in the room or enclosure is 28 ±2 °C.

(5) Leave the tank in the room or enclosure for 14 days.

(6) Hold the temperature of the room or enclosure to 28 ±2 °C; measure and record the temperature at least daily.

(7) At the end of the soak period, weigh the sealed fuel tank and record the weight to the nearest 0.1 grams. You may use less precise weights as long as the difference in mass from the start of the test to the end of the test has at least three significant figures. Unless the same fuel is used in the preconditioning fuel soak and the permeation test run, record weight measurements on five separate days per week of testing. The test is void if a linear plot of tank weight vs. test days for

the full soak period for permeation testing specified in paragraph (b)(5) of this section yields r^2 below 0.8. See 40 CFR 1065.602 for the equation to calculate r^2.

(8) Subtract the weight of the tank at the end of the test from the weight of the tank at the beginning of the test; divide the difference by the internal surface area of the fuel tank. Divide this g/m^2 value by the number of test days (using at least three significant figures) to calculate the g/m^2/day emission rate. Example: If a tank with an internal surface area of 0.72 m^2 weighed 31882.3 grams at the beginning of the test and weighed 31813.8 grams after soaking for 14.03 days, then the g/m^2/day emission rate would be—

(31882.3 g − 31813.8 g)/0.72 m^2/14.03 days = 6.78 g/m^2/day.

(9) Round your result to the same number of decimal places as the emission standard.

(10) In cases where consideration of permeation rates, using good engineering judgment, leads you to conclude that soaking for 14 days is not long enough to measure weight change to at least three significant figures, you may soak for 14 days longer. In this case, repeat the steps in paragraphs (b)(8) and (9) of this section to determine the weight change for the full 28 days.

(c) *Determination of final test result.* To determine the final test result, apply a deterioration factor to the measured emission level. The deterioration factor is the difference between permeation emissions measured before and after the durability testing described in paragraph (d) of this section. Adjust the baseline test results for each tested fuel tank by adding the deterioration factor to the measured emissions. The deterioration factor determination must be based on good engineering judgement. Therefore, during the durability testing, the test tank may not exceed the fuel tank permeation standard described in §1051.110 (this is known as ''line-crossing''). If the deterioration factor is less than zero, use zero.

(d) *Durability testing.* You normally need to perform a separate durability demonstration for each substantially different combination of treatment approaches and tank materials. Perform these demonstrations before an emission test by taking the following steps, unless you can use good engineering judgment to apply the results of previous durability testing with a different fuel system. You may ask to exclude any of the following durability tests if you can clearly demonstrate that it does not affect the emissions from your fuel tank.

(1) *Pressure cycling.* Perform a pressure test by sealing the tank and cycling it between +2.0 psig and −0.5 psig and back to +2.0 psig for 10,000 cycles at a rate 60 seconds per cycle.

(2) *UV exposure.* Perform a sunlight-exposure test by exposing the tank to an ultraviolet light of at least 24 W/m^2 (0.40 W-hr/m^2/min) on the tank surface for at least 450 hours. Alternatively, the fuel tank may be exposed to direct natural sunlight for an equivalent period of time, as long as you ensure that the tank is exposed to at least 450 daylight hours.

(3) *Slosh testing.* Perform a slosh test by filling the tank to 40 percent of its capacity with the fuel specified in §1051.501(d)(2)(i) and rocking it at a rate of 15 cycles per minute until you reach one million total cycles. Use an angle deviation of +15° to −15° from level. This test must be performed at a temperature of 28 °C ±5 °C.

(4) *Final test result.* Following the durability testing, the fuel tank must be soaked (as described in paragraph (a) of this section) to ensure that the permeation rate is stable. The period of slosh testing and the period of ultraviolet testing (if performed with fuel in the tank consistent with paragraph (a)(1) of this section) may be considered to be part of this soak, provided that the soak begins immediately after the slosh testing. To determine the final permeation rate, drain and refill the tank with fresh fuel, and repeat the permeation test run (as described in paragraph (b) of this section) immediately after this soak period. The same test fuel must be used for this permeation test run as for the permeation test run performed prior to the durability testing.

(e) *Flow chart.* The following figure presents a flow chart for the permeation testing described in this section, showing the full test procedure with

durability testing, as well as the simplified test procedure with an applied deterioration factor:

Figure 1051.515-1: Flow Chart of Permeation Test Procedure with and without DF Determination

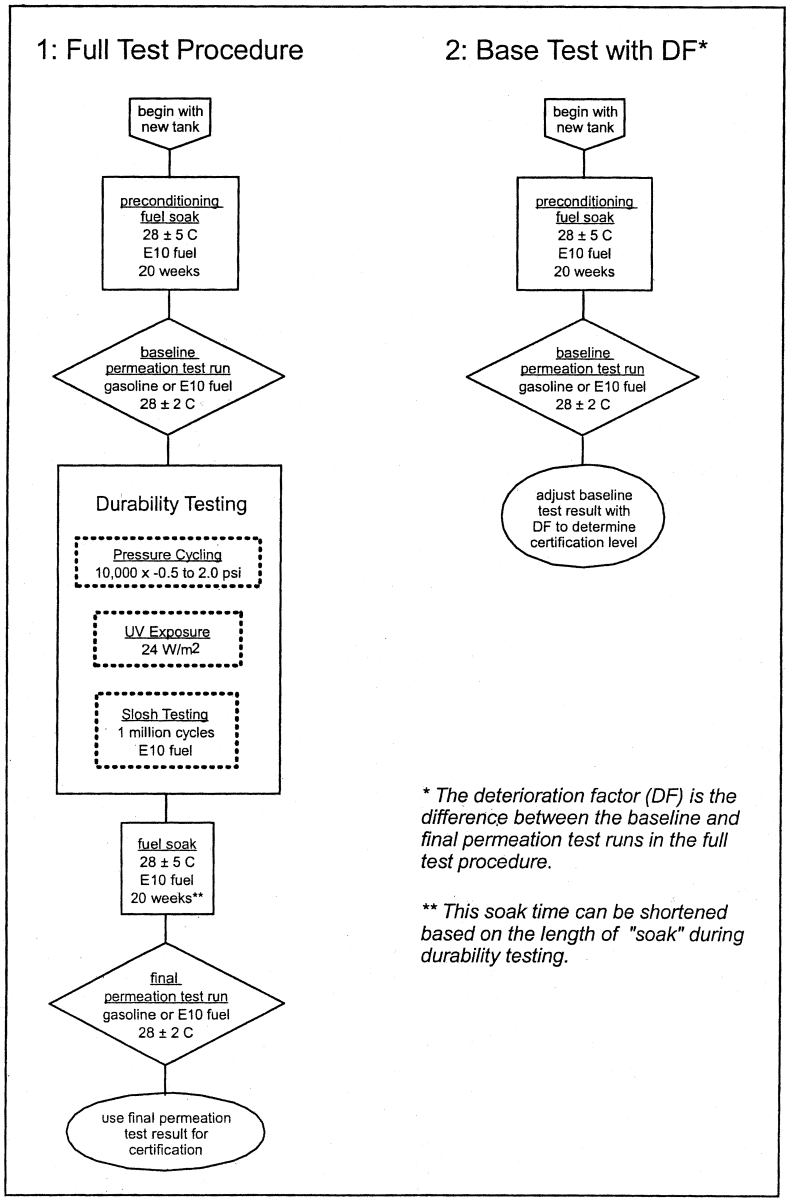

[67 FR 68347, Nov. 8, 2002, as amended at 69 FR 2442, Jan. 15, 2004; 70 FR 40501, July 13, 2005]

§ 1051.520 How do I perform exhaust durability testing?

Sections 1051.240 and 1051.243 describe the method for testing that must be performed to establish deterioration factors for an engine family.

[70 FR 40501, July 13, 2005]

Subpart G—Compliance Provisions

§ 1051.601 What compliance provisions apply to vehicles and engines subject to this part?

Engine and vehicle manufacturers, as well as owners, operators, and rebuilders of these vehicles, and all other persons, must observe the requirements and prohibitions in part 1068 of this chapter and the requirements of the Act. The compliance provisions in this subpart apply only to the vehicles and engines we regulate in this part.

§ 1051.605 What provisions apply to engines already certified under the motor vehicle program or the Large Spark-ignition program?

(a) *General provisions.* If you are an engine manufacturer, this section allows you to introduce into commerce new recreational vehicles, and engines for recreational vehicles, if the engines are already certified to the requirements that apply to spark-ignition engines under 40 CFR parts 85 and 86 or 40 CFR part 1048 for the appropriate model year. If you comply with all the provisions of this section, we consider the certificate issued under 40 CFR part 86 or 1048 for each engine to also be a valid certificate of conformity under this part 1051 for its model year, without a separate application for certification under the requirements of this part 1051. See § 1051.610 for similar provisions that apply to vehicles that are already certified to the vehicle-based standards for motor vehicles.

(b) *Vehicle-manufacturer provisions.* If you are not an engine manufacturer, you may install an engine certified for the appropriate model year under 40 CFR part 86 or 1048 in a recreational vehicle as long as you meet all the requirements and conditions specified in paragraph (d) of this section. If you modify the non-recreational engine in any of the ways described in paragraph (d)(2) of this section for installation in a recreational vehicle, we will consider you a manufacturer of recreational vehicles. Such engine modifications prevent you from using the provisions of this section.

(c) *Liability.* Engines for which you meet the requirements of this section are exempt from all the requirements and prohibitions of this part, except for those specified in this section. Engines exempted under this section must meet all the applicable requirements from 40 CFR parts 85 and 86 or 40 CFR part 1048. This paragraph (c) applies to engine manufacturers, vehicle manufacturers who use such an engine, and all other persons as if the engine were used in its originally intended application. The prohibited acts of 40 CFR 1068.101(a)(1) apply to these new engines and vehicles; however, we consider the certificate issued under 40 CFR part 86 or 1048 for each engine to also be a valid certificate of conformity under this part 1051 for its model year. If we make a determination that these engines do not conform to the regulations during their useful life, we may require you to recall them under this part 1051 or under 40 CFR part 85 or 1068.505.

(d) *Specific requirements.* If you are an engine or vehicle manufacturer and meet all the following criteria and requirements regarding your new engine or vehicle, the vehicle using the engine is eligible for an exemption under this section:

(1) Your engine must be covered by a valid certificate of conformity issued under 40 CFR part 86 or 1048.

(2) You must not make any changes to the certified engine that could reasonably be expected to increase its exhaust emissions for any pollutant, or its evaporative emissions. For example, if you make any of the following changes to one of these engines, you do not qualify for this exemption:

(i) Change any fuel system or evaporative system parameters from the certified configuration (this does not apply to refueling controls).

(ii) Change, remove, or fail to properly install any other component, element of design, or calibration specified in the engine manufacturer's application for certification. This includes aftertreatment devices and all related components.

(iii) Modify or design the engine cooling system so that temperatures or heat rejection rates are outside the original engine manufacturer's specified ranges.

(3) You must show that fewer than 50 percent of the engine family's total sales in the United States are used in recreational vehicles. This includes engines used in any application, without regard to which company manufactures the vehicle or equipment. Show this as follows:

(i) If you are the original manufacturer of the engine, base this showing on your sales information.

(ii) In all other cases, you must get the original manufacturer of the engine to confirm this based on its sales information.

(4) You must ensure that the engine has the emission control information label we require under 40 CFR part 86 or 1048.

(5) You must add a permanent supplemental label to the engine in a position where it will remain clearly visible after installation in the vehicle. In the supplemental label, do the following:

(i) Include the heading: ''RECREATIONAL VEHICLE EMISSION CONTROL INFORMATION''.

(ii) Include your full corporate name and trademark. You may instead include the full corporate name and trademark of another company you choose to designate.

(iii) State: ''THIS ENGINE WAS ADAPTED FOR A RECREATIONAL USE WITHOUT AFFECTING ITS EMISSION CONTROLS.''.

(iv) State the date you finished installation (month and year), if applicable.

(6) The original and supplemental labels must be readily visible after the engine is installed in the vehicle or, if the vehicle obscures the engine's emission control information label, the make sure the vehicle manufacturer attaches duplicate labels, as described in 40 CFR 1068.105.

(7) Send the Designated Compliance Officer a signed letter by the end of each calendar year (or less often if we tell you) with all the following information:

(i) Identify your full corporate name, address, and telephone number.

(ii) List the engine or vehicle models you expect to produce under this exemption in the coming year and describe your basis for meeting the sales restrictions of paragraph (d)(3) of this section.

(iii) State: ''We produce each listed [engine or vehicle] model for recreational application without making any changes that could increase its certified emission levels, as described in 40 CFR 1051.605.''.

(e) *Failure to comply*. If your engines do not meet the criteria listed in paragraph (d) of this section, they will be subject to the standards, requirements, and prohibitions of this part 1051 and the certificate issued under 40 CFR part 86 or 1048 will not be deemed to also be a certificate issued under this part 1051. Introducing these engines into commerce without a valid exemption or certificate of conformity under this part violates the prohibitions in 40 CFR 1068.101(a)(1).

(f) *Data submission*. We may require you to send us emission test data on any applicable nonroad duty cycles.

(g) *Participation in averaging, banking and trading*. Engines or vehicles adapted for recreational use under this section may not generate or use emission credits under this part 1051. These engines or vehicles may generate credits under the ABT provisions in 40 CFR part 86. These engines or vehicles must use emission credits under 40 CFR part 86 if they are certified to an FEL that exceeds an applicable standard.

[70 FR 40501, July 13, 2005, as amended at 73 FR 59254, Oct. 8, 2008]

§ 1051.610 What provisions apply to vehicles already certified under the motor vehicle program?

(a) *General provisions*. If you are a motor-vehicle manufacturer, this section allows you to introduce new recreational vehicles into commerce if the vehicle is already certified to the requirements that apply under 40 CFR parts 85 and 86. If you comply with all

of the provisions of this section, we consider the certificate issued under 40 CFR part 86 for each motor vehicle to also be a valid certificate of conformity for the engine under this part 1051 for its model year, without a separate application for certification under the requirements of this part 1051. This section applies especially for highway motorcycles that are modified for recreational nonroad use. See § 1051.605 for similar provisions that apply to motor-vehicle engines or Large SI engines produced for recreational vehicles.

(b) *Nonroad vehicle-manufacturer provisions.* If you are not a motor-vehicle manufacturer, you may produce recreational vehicles from motor vehicles under this section as long as you meet all the requirements and conditions specified in paragraph (d) of this section. If you modify the motor vehicle or its engine in any of the ways described in paragraph (d)(2) of this section, we will consider you a manufacturer of a new recreational vehicle. Such modifications prevent you from using the provisions of this section.

(c) *Liability.* Engines and vehicles for which you meet the requirements of this section are exempt from all the requirements and prohibitions of this part, except for those specified in this section. Engines exempted under this section must meet all the applicable requirements from 40 CFR parts 85 and 86. This applies to engine manufacturers, vehicle manufacturers, and all other persons as if the recreational vehicles were motor vehicles. The prohibited acts of 40 CFR 1068.101(a)(1) apply to these new recreational vehicles; however, we consider the certificate issued under 40 CFR part 86 for each motor vehicle to also be a valid certificate of conformity for the recreational vehicle under this part 1051 for its model year. If we make a determination that these engines or vehicles do not conform to the regulations during their useful life, we may require you to recall them under 40 CFR part 86 or 40 CFR 1068.505.

(d) *Specific requirements.* If you are a motor-vehicle manufacturer and meet all the following criteria and requirements regarding your new recreational vehicle and its engine, the vehicle is eligible for an exemption under this section:

(1) Your vehicle must be covered by a valid certificate of conformity as a motor vehicle issued under 40 CFR part 86.

(2) You must not make any changes to the certified vehicle that we could reasonably expect to increase its exhaust emissions for any pollutant, or its evaporative emissions if it is subject to evaporative-emission standards. For example, if you make any of the following changes, you do not qualify for this exemption:

(i) Change any fuel system parameters from the certified configuration.

(ii) Change, remove, or fail to properly install any other component, element of design, or calibration specified in the vehicle manufacturer's application for certification. This includes aftertreatment devices and all related components.

(iii) Modify or design the engine cooling system so that temperatures or heat rejection rates are outside the original vehicle manufacturer's specified ranges.

(iv) Add more than 500 pounds to the curb weight of the originally certified motor vehicle.

(3) You must show that fewer than 50 percent of the engine family's total sales in the United States are used in recreational vehicles. This includes any type of vehicle, without regard to which company completes the manufacturing of the recreational vehicle. Show this as follows:

(i) If you are the original manufacturer of the vehicle, base this showing on your sales information.

(ii) In all other cases, you must get the original manufacturer of the vehicle to confirm this based on their sales information.

(4) The vehicle must have the vehicle emission control information we require under 40 CFR part 86.

(5) You must add a permanent supplemental label to the vehicle in a position where it will remain clearly visible. In the supplemental label, do the following:

(i) Include the heading: ''RECREATIONAL VEHICLE ENGINE EMISSION CONTROL INFORMATION''.

(ii) Include your full corporate name and trademark. You may instead include the full corporate name and trademark of another company you choose to designate.

(iii) State: ''THIS VEHICLE WAS ADAPTED FOR RECREATIONAL USE WITHOUT AFFECTING ITS EMISSION CONTROLS.''.

(iv) State the date you finished modifying the vehicle (month and year), if applicable.

(6) The original and supplemental labels must be readily visible in the fully assembled vehicle.

(7) Send the Designated Compliance Officer a signed letter by the end of each calendar year (or less often if we tell you) with all the following information:

(i) Identify your full corporate name, address, and telephone number.

(ii) List the vehicle models you expect to produce under this exemption in the coming year and describe your basis for meeting the sales restrictions of paragraph (d)(3) of this section.

(iii) State: ''We produced each listed engine or vehicle model for recreational application without making any changes that could increase its certified emission levels, as described in 40 CFR 1051.610.''.

(e) *Failure to comply*. If your engines or vehicles do not meet the criteria listed in paragraph (d) of this section, the engines will be subject to the standards, requirements, and prohibitions of this part 1051, and the certificate issued under 40 CFR part 86 will not be deemed to also be a certificate issued under this part 1051. Introducing these engines into commerce without a valid exemption or certificate of conformity under this part violates the prohibitions in 40 CFR 1068.101(a)(1).

(f) *Data submission*. We may require you to send us emission test data on any applicable nonroad duty cycles.

(g) *Participation in averaging, banking and trading*. Vehicles adapted for recreational use under this section may not generate or use emission credits under this part 1051. These vehicles may generate credits under the ABT provisions in 40 CFR part 86. These vehicles must use emission credits under 40 CFR part 86 if they are certified to an FEL that exceeds an emission standard that applies.

[70 FR 40502, July 13, 2005, as amended at 73 FR 59254, Oct. 8, 2008]

§ 1051.615 What are the special provisions for certifying small recreational engines?

(a) You may certify ATVs with engines that have total displacement of less than 100 cc to the following exhaust emission standards instead of certifying them to the exhaust emission standards of subpart B of this part:

(1) 25.0 g/kW-hr $HC+NO_X$, with an FEL cap of 40.0 g/kW-hr $HC+NO_X$.

(2) 500 g/kW-hr CO.

(b) You may certify off-highway motorcycles with engines that have total displacement of 70 cc or less to the following exhaust emission standards instead of certifying them to the exhaust emission standards of subpart B of this part:

(1) 16.1 g/kW-hr $HC+NO_X$, with an FEL cap of 32.2 g/kW-hr $HC+NO_X$.

(2) 519 g/kW-hr CO.

(c) You may use the averaging, banking, and trading provisions of subpart H of this part to show compliance with this $HC+NO_X$ standards (an engine family meets emission standards even if its family emission limit is higher than the standard, as long as you show that the whole averaging set of applicable engine families meet the applicable emission standards using emission credits, and the vehicles within the family meet the family emission limit). You may not use averaging to meet the CO standards of this section.

(d) Measure steady-state emissions by testing the engine on an engine dynamometer using the equipment and procedures of 40 CFR part 1065 with either discrete-mode or ramped-modal cycles. You must use the type of testing you select in your application for certification for all testing you perform for that engine family. If we test your engines to confirm that they meet emission standards, we will do testing the same way. If you submit certification test data collected with both discrete-mode and ramped-modal testing (either in your original application or in an amendment to your application), either method may be used for

subsequent testing. We may also perform other testing as allowed by the Clean Air Act. Measure steady-state emissions as follows:

(1) For discrete-mode testing, sample emissions separately for each mode, then calculate an average emission level for the whole cycle using the weighting factors specified for each mode. In each mode, operate the engine for at least 5 minutes, then sample emissions for at least 1 minute. Calculate cycle statistics for the sequence of modes and compare with the specified values in 40 CFR 1065.514 to confirm that the test is valid.

(2) For ramped-modal testing, start sampling at the beginning of the first mode and continue sampling until the end of the last mode. Calculate emissions and cycle statistics the same as for transient testing.

(3) Measure emissions by testing the engine on a dynamometer with one or more of the following sets of duty cycles to determine whether it meets applicable emission standards:

(i) The following duty cycle applies for discrete-mode testing:

TABLE 1 OF § 1051.615—6-MODE DUTY CYCLE FOR RECREATIONAL ENGINES

Mode No.	Engine speed (percent) [1]	Torque (percent) [2]	Minimum time in mode (minutes)	Weighting factors
1	85	100	5.0	0.09
2	85	75	5.0	0.20
3	85	50	5.0	0.29
4	85	25	5.0	0.30
5	85	10	5.0	0.07
6	Idle	0	5.0	0.05

[1] Percent speed is percent of maximum test speed.
[2] Percent torque is percent of maximum torque at the commanded test speed.

(ii) The following duty cycle applies for ramped-modal testing:

TABLE 2 OF § 1051.615—RAMPED-MODAL CYCLE FOR TESTING RECREATIONAL ENGINES

RMC mode	Time	Speed (percent) [1, 2]	Torque (percent) [2, 3]
1a Steady-state	41	Warm Idle	0.
1b Transition	20	Linear Transition	Linear Transition.
2a Steady-state	135	85	100.
2b Transition	20	85	Linear Transition.
3a Steady-state	112	85	10.
3b Transition	20	85	Linear Transition.
4a Steady-state	337	85	75.
4b Transition	20	85	Linear Transition.
5a Steady-state	518	85	25.
5b Transition	20	85	Linear Transition.
6a Steady-state	494	85	50.
6b Transition	20	Linear Transition	Linear Transition.
7 Steady-state	43	Warm Idle	0.

[1] Percent speed is percent of maximum test speed.
[2] Advance from one mode to the next within a 20-second transition phase. During the transition phase, command a linear progression from the torque setting of the current mode to the torque setting of the next mode.
[3] Percent torque is percent of maximum torque at the commanded test speed.

(4) During idle mode, operate the engine at its warm idle speed as described in 40 CFR 1065.510.

(5) For the full-load operating mode, operate the engine at wide-open throttle.

(6) See 40 CFR part 1065 for detailed specifications of tolerances and calculations.

(e) All other requirements and prohibitions of this part apply to these engines and vehicles.

[67 FR 68347, Nov. 8, 2002, as amended at 70 FR 40503, July 13, 2005; 73 FR 59254, Oct. 8, 2008]

§ 1051.620 When may a manufacturer obtain an exemption for competition recreational vehicles?

(a) We may grant you an exemption from the standards and requirements of this part for a new recreational vehicle on the grounds that it is to be used solely for competition. The provisions of this part other than those in this section do not apply to recreational vehicles that we exempt for use solely for competition.

(b) We will exempt vehicles that we determine will be used solely for competition. The basis of our determinations are described in paragraphs (b)(1), (b)(2), and (c) of this section. Exemptions granted under this section are good for only one model year and you must request renewal for each subsequent model year. We will not approve your renewal request if we determine the vehicles will not be used solely for competition.

(1) *Off-highway motorcycles.* Motorcycles that are marketed and labeled as only for competitive use and that meet at least four of the criteria listed in paragraphs (b)(1)(i) through (vi) of this section are considered to be used solely for competition, except in cases where other information is available that indicates that they are not used solely for competition. The following features are indicative of motorcycles used solely for competition:

(i) The absence of a headlight or other lights.

(ii) The absence of a spark arrestor.

(iii) The absence of manufacturer warranty.

(iv) Suspension travel greater than 10 inches.

(v) Engine displacement greater than 50 cc.

(vi) The absence of a functional seat. (For example, a seat with less than 30 square inches of seating surface would generally not be considered a functional seat).

(2) *Snowmobiles and ATVs.* Snowmobiles and ATVs meeting all of the following criteria are considered to be used solely for competition, except in cases where other information is available that indicates that they are not used solely for competition:

(i) The vehicle or engine may not be displayed for sale in any public dealership.

(ii) Sale of the vehicle must be limited to professional racers or other qualified racers.

(iii) The vehicle must have performance characteristics that are substantially superior to noncompetitive models.

(c) Vehicles not meeting the applicable criteria listed in paragraph (b) of this section will be exempted only in cases where the manufacturer has clear and convincing evidence that the vehicles will be used solely for competition.

(d) You must permanently label vehicles exempted under this section to clearly indicate that they are to be used only for competition. Failure to properly label a vehicle will void the exemption for that vehicle.

(e) If we request it, you must provide us any information we need to determine whether the vehicles are used solely for competition.

[67 FR 68347, Nov. 8, 2002, as amended at 70 FR 40504, July 13, 2005]

§ 1051.625 What special provisions apply to unique snowmobile designs for small-volume manufacturers?

(a) If you are a small-volume manufacturer, we may permit you to produce up to 600 snowmobiles per year that are certified to less stringent emission standards than those in § 1051.103, as long as you meet all the conditions and requirements in this section.

(b) To apply for alternate standards under this section, send the Designated Officer a written request. In your request, do two things:

(1) Show that the snowmobile has unique design, calibration, or operating characteristics that make it atypical and infeasible or highly impractical to meet the emission standards in § 1051.103, considering technology, cost, and other factors.

(2) Identify the level of compliance you can achieve, including a description of available emission-control technologies and any constraints that may prevent more effective use of these technologies.

(c) You must give us other relevant information if we ask for it.

(d) An authorized representative of your company must sign the request and include the statement: ''All the information in this request is true and accurate, to the best of my knowledge.''.

(e) Send your request for this extension at least nine months before the relevant deadline. If different deadlines apply to companies that are not small-volume manufacturers, do not send your request before the regulations in question apply to the other manufacturers.

(f) If we approve your request, we will set alternate standards for your qualifying snowmobiles. These standards will not be above 400 g/kW-hr for CO or 150 g/kW-hr for HC.

(g) You may produce these snowmobiles to meet the alternate standards we establish under this section as long as you continue to produce them at the same or lower emission levels.

(h) You may not include snowmobiles you produce under this section in any averaging, banking, or trading calculations under Subpart H of this part.

(i) You must meet all the requirements of this part, except as noted in this section.

§ 1051.630 What special provisions apply to unique snowmobile designs for all manufacturers?

(a) We may permit you to produce up to 600 snowmobiles per year that are certified to the FELs listed in this section without new test data, as long as you meet all the conditions and requirements in this section.

(b) You may certify these snowmobiles with FELs of 560 g/kW-hr for CO and 270 g/kW-hr for HC (using the normal certification procedures).

(c) The emission levels described in this section are intended to represent worst-case emission levels. You may not certify snowmobiles under this section if good engineering judgment indicates that they have emission rates higher than these levels.

(d) Include snowmobiles you produce under this section in your averaging calculations under Subpart H of this part.

(e) You must meet all the requirements of this part, unless the regulations of this part specify otherwise.

§ 1051.635 What provisions apply to new manufacturers that are small businesses?

(a) If you are a small business (as defined by the Small Business Administration at 13 CFR 121.201) that manufactures recreational vehicles, but does not otherwise qualify for the small-volume manufacturer provisions of this part, you may ask us to designate you to be a small-volume manufacturer. You may do this whether you began manufacturing recreational vehicles before, during, or after 2002.

(b) We may set other reasonable conditions that are consistent with the intent of this section and the Act. For example, we may place sales limits on companies that we designate to be small-volume manufacturers under this section.

[67 FR 68347, Nov. 8, 2002, as amended at 73 FR 59255, Oct. 8, 2008]

§ 1051.640 What special provisions apply for custom off-highway motorcycles that are similar to highway motorcycles?

You may ask to exempt custom-designed off-highway motorcycles that are substantially similar to highway motorcycles under the display exemption provisions of 40 CFR 86.407–78(c). Motorcycles exempt under this provision are subject to the restrictions of 40 CFR 86.407–78(c) and are considered to be motor vehicles for the purposes of this part 1051.

[69 FR 2445, Jan. 15, 2004]

§ 1051.645 What special provisions apply to branded engines?

The following provisions apply if you identify the name and trademark of another company instead of your own on your emission control information label, as provided by § 1051.135(c)(2):

(a) You must have a contractual agreement with the other company

that obligates that company to take the following steps:

(1) Meet the emission warranty requirements that apply under § 1051.120. This may involve a separate agreement involving reimbursement of warranty-related expenses.

(2) Report all warranty-related information to the certificate holder.

(b) In your application for certification, identify the company whose trademark you will use.

(c) You remain responsible for meeting all the requirements of this chapter, including warranty and defect-reporting provisions.

[70 FR 40504, July 13, 2005, as amended at 73 FR 59255, Oct. 8, 2008]

§ 1051.650 What special provisions apply for converting a vehicle to use an alternate fuel?

A certificate of conformity is no longer valid for a vehicle if the vehicle is modified such that it is not in a configuration covered by the certificate. This section applies if such modifications are done to convert the vehicle to run on a different fuel type. Such vehicles may be recertified as specified in this section if the original certificate is no longer valid for that vehicle.

(a) Converting a certified new vehicle to run on a different fuel type violates 40 CFR 1068.101(a)(1) if the modified vehicle is not covered by a certificate of conformity.

(b) Converting a certified vehicle that is not new to run on a different fuel type violates 40 CFR 1068.101(b)(1) if the modified vehicle is not covered by a certificate of conformity. We may specify alternate certification provisions consistent with the requirements of this part. For example, you may certify the modified vehicle for a partial useful life. For example, if the vehicle is modified halfway through its original useful life period, you may generally certify the vehicle based on completing the original useful life period; or if the vehicle is modified after the original useful life period is past, you may generally certify the vehicle based on testing that does not involve further durability demonstration.

(c) Vehicles (or engines) may be certified using the certification procedures for new vehicles (or engines) as specified in this part or using the certification procedures for aftermarket parts as specified in 40 CFR part 85, subpart V. Unless the original vehicle manufacturer continues to be responsible for the vehicle as specified in paragraph (d) of this section, you must remove the original manufacturer's emission control information label if you recertify the vehicle.

(d) The original vehicle manufacturer is not responsible for operation of modified vehicles in configurations resulting from modifications performed by others. In cases where the modification allows a vehicle to be operated in either its original configuration or a modified configuration, the original vehicle manufacturer remains responsible for operation of the modified vehicle in its original configuration.

(e) Entities producing conversion kits may obtain certificates of conformity for the converted vehicles. Such entities are vehicle manufacturers for purposes of this part.

[73 FR 59255, Oct. 8, 2008]

Subpart H—Averaging, Banking, and Trading for Certification

§ 1051.701 General provisions.

(a) You may average, bank, and trade emission credits for purposes of certification as described in this subpart to show compliance with the standards of this part. To do this you must certify your engines to Family Emission Limits (FELs) and show that your average emission levels for all your engine families together are below the emission standards in subpart B of this part, or that you have sufficient credits to offset a credit deficit for the model year (as calculated in § 1051.720).

(b) The following averaging set restrictions apply:

(1) You may not average together engine families that are certified to different standards. You may, however, use banked credits that were generated relative to different standards, except as prohibited by paragraphs (b)(2) and (3) of this section, paragraph (e) of this section, or by other provisions in this part. For example, you may not average together within a model year off-highway motorcycles that are certified

to the standards in §1051.105(a)(1) and §1051.105(a)(2); but you may use banked credits generated by off-highway motorcycles that are certified to the standards in §1051.105(a)(1) to show compliance with the standards in §1051.105(a)(2) in a later model year, and vice versa.

(2) There are separate averaging, banking, and trading programs for snowmobiles, ATVs, and off-highway motorcycles. You may not average or exchange banked or traded credits from engine families of one type of vehicle with those from engine families of another type of vehicle.

(3) You may not average or exchange banked or traded credits with other engine families if you use fundamentally different measurement procedures for the different engine families (for example, ATVs certified to chassis-based vs. engine-based standards). This paragraph (b)(3) does not restrict you from averaging together engine families that use test procedures that we determine provide equivalent emission results.

(4) You may not average or exchange banked or traded exhaust credits with evaporative credits, or vice versa.

(c) The definitions of Subpart I of this part apply to this subpart. The following definitions also apply:

(1) *Actual emission credits* means emission credits you have generated that we have verified by reviewing your final report.

(2) *Average standard* means a standard that allows you comply by averaging all your vehicles under this part. See subpart B of this part to determine which standards are average standards.

(3) *Averaging set* means a set of engines in which emission credits may be exchanged only with other engines in the same averaging set.

(4) *Broker* means any entity that facilitates a trade of emission credits between a buyer and seller.

(5) *Buyer* means the entity that receives emission credits as a result of a trade.

(6) *Reserved emission credits* means emission credits you have generated that we have not yet verified by reviewing your final report.

(7) *Seller* means the entity that provides emission credits during a trade.

(8) *Trade* means to exchange emission credits, either as a buyer or seller.

(d) In your application for certification, base your showing of compliance on projected production volumes for vehicles whose point of first retail sale is in the United States. As described in §1051.730, compliance with the requirements of this subpart is determined at the end of the model year based on actual production volumes for vehicles whose point of first retail sale is in the United States. Do not include any of the following vehicles to calculate emission credits:

(1) Vehicles exempted under subpart G of this part or under 40 CFR part 1068.

(2) Exported vehicles.

(3) Vehicles not subject to the requirements of this part, such as those excluded under §1051.5.

(4) Vehicles for which the location of first retail sale is in a state that has applicable state emission regulations for that model year. However, this restriction does not apply if we determine that the state standards and requirements are equivalent to those of this part and that these vehicles sold in such a state will not generate credits under the state program. For example, you may not include vehicles certified for California if it has more stringent emission standards for these vehicles or those vehicles generate or use emission credits under the California program.

(5) Any other vehicles, where we indicate elsewhere in this part 1051 that they are not to be included in the calculations of this subpart.

(e) You may not use emission credits generated under this subpart to offset any emissions that exceed an FEL or standard, except as specified in §1051.225(f)(1). This applies for all testing, including certification testing, in-use testing, selective enforcement audits, and other production-line testing.

(f) Emission credits may be used in the model year they are generated or in future model years. Emission credits may not be used for past model years.

(g) You may increase or decrease an FEL during the model year by amending your application for certification under § 1051.225.

[67 FR 68347, Nov. 8, 2002, as amended at 70 FR 40504, July 13, 2005; 73 FR 59256, Oct. 8, 2008]

§ 1051.705 How do I average emission levels?

(a) As specified in subpart B of this part, certify each vehicle to an FEL, subject to the FEL caps in subpart B of this part.

(b) Calculate a preliminary average emission level according to § 1051.720 for each averaging set using projected U.S.-directed production volumes from your application for certification, excluding vehicles described in § 1051.701(d)(4).

(c) After the end of your model year, calculate a final average emission level according to § 1051.720 for each type of recreational vehicle or engine you manufacture or import. Use actual U.S.-directed production volumes, excluding vehicles described in § 1051.701(d)(4).

(d) If your preliminary average emission level is below the allowable average standard, see § 1051.710 for information about generating and banking emission credits. These credits will be considered reserved until we verify them in reviewing the end-of-year report.

(e) If your average emission level is above the allowable average standard, you must obtain enough emission credits to offset the deficit by the due date for the final report required in § 1051.730. The emission credits used to address the deficit may come from emission credits you have banked or from emission credits you obtain through trading.

[67 FR 68347, Nov. 8, 2002, as amended at 70 FR 40505, July 13, 2005]

§ 1051.710 How do I generate and bank emission credits?

(a) Banking is the retention of emission credits by the manufacturer generating the emission credits for use in averaging or trading in future model years. You may use banked emission credits only within the averaging set in which they were generated.

(b) If your average emission level is below the average standard, you may calculate credits according to § 1051.720. Credits you generate do not expire.

(c) You may generate credits if you are a certifying manufacturer.

(d) You may designate any emission credits you plan to bank in the reports you submit under § 1051.730. During the model year and before the due date for the final report, you may designate your reserved emission credits for averaging or trading.

(e) Reserved credits become actual emission credits when you submit your final report. However, we may revoke these emission credits if we are unable to verify them after reviewing your reports or auditing your records.

[70 FR 40505, July 13, 2005, as amended at 73 FR 59256, Oct. 8, 2008]

§ 1051.715 How do I trade emission credits?

(a) Trading is the exchange of emission credits between manufacturers. You may use traded emission credits for averaging, banking, or further trading transactions. Traded emission credits may be used only within the averaging set in which they were generated.

(b) You may trade actual emission credits as described in this subpart. You may also trade reserved emission credits, but we may revoke these emission credits based on our review of your records or reports or those of the company with which you traded emission credits. You may trade banked credits within an averaging set to any certifying manufacturer.

(c) [Reserved]

(d) If a negative emission credit balance results from a transaction, both the buyer and seller are liable, except in cases we deem to involve fraud. See § 1051.255(e) for cases involving fraud. We may void the certificates of all engine families participating in a trade that results in a manufacturer having a negative balance of emission credits. See § 1051.745.

[70 FR 40505, July 13, 2005, as amended at 73 FR 59256, Oct. 8, 2008]

§ 1051.720 How do I calculate my average emission level or emission credits?

(a) Calculate your average emission level for each type of recreational vehicle or engine for each model year according to the following equation and round it to the nearest tenth of a g/km or g/kW-hr. Use consistent units throughout the calculation.

(1) For exhaust emissions:

(i) Calculate the average emission level as:

$$\text{Emission level} = \left[\sum_i (\text{FEL})_i \times (\text{UL})_i \times (\text{Production})_i\right] \Big/ \left[\sum_i (\text{Production})_i \times (\text{UL})_i\right]$$

Where:

FEL_i = The FEL to which the engine family is certified.

UL_i = The useful life of the engine family.

$Production_i$ = The number of vehicles in the engine family.

(ii) Use U.S.-directed production projections for initial certification, and actual U.S.-directed production volumes to determine compliance at the end of the model year.

(2) For vehicles that have standards expressed as g/kW-hr and a useful life in kilometers, convert the useful life to kW-hr based on the maximum engine power and an assumed vehicle speed of 30 km/hr as follows: UL (kW-hr) = UL (km) × Maximum Engine Power (kW) ÷ 30 km/hr. (Note: It is not necessary to include a load factor, since credit exchange is not allowed between vehicles certified to g/kW-hr standards and vehicles certified to g/km standards.)

(3) For evaporative emission standards expressed as $g/m^2/day$, use the useful life value in years multiplied by 365.24 and calculate the average emission level as:

$$\text{Emission level} = \left[\sum_i (\text{FEL})_i \times (\text{UL})_i \times (\text{Production})_i\right] / \left[\sum_i (\text{Production})_i \times (\text{UL})_i\right]$$

Where:

FEL_i = The FEL to which the engine family is certified, as described in paragraph (a)(4) of this section.

$Production_i$ = The number of vehicles in the engine family times the average internal surface area of the vehicles' fuel tanks.

(4) Determine the FEL for calculating credits under paragraph (a)(3) of this section using any of the following values:

(i) The FEL to which the tank is certified, as long as the FEL is at or below 3.0 $g/m^2/day$.

(ii) 10.4 $g/m^2/day$. However, if you use this value to establish the FEL for any of your tanks, you must use this value to establish the FEL for every tank not covered by paragraph (a)(4)(i) of this section.

(iii) The measured permeation rate of the tank or the measured permeation rate of a thinner-walled tank of the same material. However, if you use this approach to establish the FEL for any of your tanks, you must establish an FEL based on emission measurements for every tank not covered by paragraph (a)(4)(i) of this section.

(b) If your average emission level is below the average standard, calculate credits available for banking according to the following equation and round them to the nearest tenth of a gram:

$$\text{Credit} = \left[(\text{Average standard} - \text{Emission level})\right] \times \left[\sum_{i} (\text{Production})_i \times (\text{UL})_i\right]$$

(c) If your average emission level is above the average standard, calculate your preliminary credit deficit according to the following equation, rounding to the nearest tenth of a gram:

$$\text{Deficit} = \left[(\text{Emission level} - \text{Average standard})\right] \times \left[\sum_{i} (\text{Production})_i \times (\text{UL})_i\right]$$

[67 FR 68347, Nov. 8, 2002, as amended at 70 FR 40505, July 13, 2005; 73 FR 59256, Oct. 8, 2008]

§ 1051.725 What must I include in my applications for certification?

(a) You must declare in your applications for certification your intent to use the provisions of this subpart. You must also declare the FELs you select for each engine family. Your FELs must comply with the specifications of subpart B of this part, including the FEL caps. FELs must be expressed to the same number of decimal places as the applicable standards.

(b) Include the following in your application for certification:

(1) A statement that, to the best of your belief, you will not have a negative balance of emission credits for any averaging set when all emission credits are calculated at the end of the year. This means that if you believe that your average emission level will be above the standard (*i.e.*, that you will have a deficit for the model year), you must have banked credits (or project to have received traded credits) to offset the deficit.

(2) Detailed calculations of projected emission credits (positive or negative) based on projected production volumes. We may require you to include similar calculations from your other engine families to demonstrate that you will be able to avoid a negative credit balance for the model year. If you project negative emission credits for an engine family, state the source of positive emission credits you expect to use to offset the negative emission credits.

[70 FR 40506, July 13, 2005, as amended at 73 FR 59256, Oct. 8, 2008]

§ 1051.730 What ABT reports must I send to EPA?

(a) If any of your engine families are certified using the ABT provisions of this subpart, you must send an end-of-year report within 90 days after the end of the model year and a final report within 270 days after the end of the model year. We may waive the requirement to send the end-of year report, as long as you send the final report on time.

(b) Your end-of-year and final reports must include the following information for each engine family:

(1) Engine-family designation.

(2) The emission standards that would otherwise apply to the engine family.

(3) The FEL for each pollutant. If you change the FEL after the start of production, identify the date that you started using the new FEL and/or give the vehicle identification number for the first vehicle covered by the new FEL. In this case, identify each applicable FEL and calculate the positive or negative emission credits under each FEL.

(4) The projected and actual production volumes for the model year with a point of retail sale in the United States, as described in § 1051.701(d). For

fuel tanks, state the production volume in terms of surface area and production volume for each tank configuration and state the total surface area for the emission family. If you changed an FEL during the model year, identify the actual production volume associated with each FEL.

(5) For vehicles that have standards expressed as g/kW-hr, maximum engine power for each vehicle configuration, and the average engine power weighted by U.S.-directed production volumes for the engine family.

(6) Useful life.

(7) Calculated positive or negative emission credits. Identify any emission credits that you traded, as described in paragraph (d)(1) of this section.

(c) Your end-of-year and final reports must include the following additional information:

(1) Show that your net balance of emission credits in each averaging set in the applicable model year is not negative.

(2) State whether you will retain any emission credits for banking.

(3) State that the report's contents are accurate.

(d) If you trade emission credits, you must send us a report within 90 days after the transaction, as follows:

(1) As the seller, you must include the following information in your report:

(i) The corporate names of the buyer and any brokers.

(ii) A copy of any contracts related to the trade.

(iii) The engine families that generated emission credits for the trade, including the number of emission credits from each family.

(2) As the buyer, you must include the following information in your report:

(i) The corporate names of the seller and any brokers.

(ii) A copy of any contracts related to the trade.

(iii) How you intend to use the emission credits, including the number of emission credits you intend to apply to each engine family (if known).

(e) Send your reports electronically to the Designated Compliance Officer using an approved information format. If you want to use a different format, send us a written request with justification for a waiver.

(f) Correct errors in your end-of-year report or final report as follows:

(1) You may correct any errors in your end-of-year report when you prepare the final report as long as you send us the final report by the time it is due.

(2) If you or we determine within 270 days after the end of the model year that errors mistakenly decreased your balance of emission credits, you may correct the errors and recalculate the balance of emission credits. You may not make these corrections for errors that are determined more than 270 days after the end of the model year. If you report a negative balance of emission credits, we may disallow corrections under this paragraph (f)(2).

(3) If you or we determine anytime that errors mistakenly increased your balance of emission credits, you must correct the errors and recalculate the balance of emission credits.

[70 FR 40506, July 13, 2005, as amended at 73 FR 59256, Oct. 8, 2008]

§ 1051.735 What records must I keep?

(a) You must organize and maintain your records as described in this section. We may review your records at any time.

(b) Keep the records required by this section for at least eight years after the due date for the end-of-year report. You may not use emission credits on any engines if you do not keep all the records required under this section. You must therefore keep these records to continue to bank valid credits. Store these records in any format and on any media as long as you can promptly send us organized, written records in English if we ask for them. You must keep these records readily available. We may review them at any time.

(c) Keep a copy of the reports we require in § 1051.725 and § 1051.730.

(d) Keep records of the identification number for each vehicle or engine or piece of equipment you produce that generates or uses emission credits under the ABT program. You may identify these numbers as a range.

(e) We may require you to keep additional records or to send us relevant information not required by this section in accordance with the Clean Air Act.

[70 FR 40506, July 13, 2005, as amended at 73 FR 59257, Oct. 8, 2008]

§ 1051.740 Are there special averaging provisions for snowmobiles?

For snowmobiles, you may only use credits for the same phase or set of standards against which they were generated, except as allowed by this section.

(a) *Restrictions.* (1) You may not use any Phase 1 or Phase 2 credits for Phase 3 compliance.

(2) You may not use Phase 1 HC credits for Phase 2 HC compliance. However, because the Phase 1 and Phase 2 CO standards are the same, you may use Phase 1 CO credits for compliance with the Phase 2 CO standards.

(b) *Special credits for next phase of standards.* You may choose to generate credits early for banking for purposes of compliance with later phases of standards as follows:

(1) If your corporate average emission level at the end of the model year exceeds the applicable (current) phase of standards (without the use of traded or previously banked credits), you may choose to redesignate some of your snowmobile production to a calculation to generate credits for a future phase of standards. To generate credits the snowmobiles designated must have an FEL below the emission level of that set of standards. This can be done on a pollutant specific basis.

(2) Do not include the snowmobiles that you redesignate in the final compliance calculation of your average emission level for the otherwise applicable (current) phase of standards. Your average emission level for the remaining (non-redesignated) snowmobiles must comply with the otherwise applicable (current) phase of standards.

(3) Include the snowmobiles that you redesignate in a separate calculation of your average emission level for redesignated engines. Calculate credits using this average emission level relative to the specific pollutant in the future phase of standards. These credits may be used for compliance with the future standards.

(4) For generating early Phase 3 credits, you may generate credits for HC or CO separately as described:

(i) To determine if you qualify to generate credits in accordance with paragraphs (b)(1) through (3) of this section, you must meet the credit trigger level. For HC this value is 75 g/kW-hr. For CO this value is 200 g/kW-hr.

(ii) HC and CO credits for Phase 3 are calculated relative to 75 g/kW-hr and 200 g/kW-hr values, respectively.

(5) Credits can also be calculated for Phase 3 using both sets of standards. Without regard to the trigger level values, if your net emission reduction for the redesignated averaging set exceeds the requirements of Phase 3 in § 1051.103 (using both $HC+NO_X$ and CO in the Phase 3 equation in § 1051.103), then your credits are the difference between the Phase 3 reduction requirement of that section and your calculated value.

[70 FR 40507, July 13, 2005, as amended at 73 FR 35952, June 25, 2008; 73 FR 59257, Oct. 8, 2008]

§ 1051.745 What can happen if I do not comply with the provisions of this subpart?

(a) For each engine family participating in the ABT program, the certificate of conformity is conditional upon full compliance with the provisions of this subpart during and after the model year. You are responsible to establish to our satisfaction that you fully comply with applicable requirements. We may void the certificate of conformity for an engine family if you fail to comply with any provisions of this subpart.

(b) You may certify your engine family to an FEL above an applicable standard based on a projection that you will have enough emission credits to avoid a negative credit balance for each averaging set for the applicable model year. However, except as allowed in § 1051.145(h), we may void the certificate of conformity if you cannot show in your final report that you have enough actual emission credits to offset a deficit for any pollutant in an engine family.

(c) We may void the certificate of conformity for an engine family if you fail to keep records, send reports, or give us information we request.

(d) You may ask for a hearing if we void your certificate under this section (see § 1051.820).

[70 FR 40507, July 13, 2005]

Subpart I—Definitions and Other Reference Information

§ 1051.801 What definitions apply to this part?

The following definitions apply to this part. The definitions apply to all subparts unless we note otherwise. All undefined terms have the meaning the Act gives to them. The definitions follow:

Act means the Clean Air Act, as amended, 42 U.S.C. 7401–7671q.

Adjustable parameter means any device, system, or element of design that someone can adjust (including those which are difficult to access) and that, if adjusted, may affect emissions or engine performance during emission testing or normal in-use operation. This includes, but is not limited to, parameters related to injection timing and fueling rate. You may ask us to exclude a parameter that is difficult to access if it cannot be adjusted to affect emissions without significantly degrading engine performance, or if you otherwise show us that it will not be adjusted in a way that affects emissions during in-use operation.

Aftertreatment means relating to a catalytic converter, particulate filter, or any other system, component, or technology mounted downstream of the exhaust valve (or exhaust port) whose design function is to decrease emissions in the engine exhaust before it is exhausted to the environment. Exhaust-gas recirculation (EGR), turbochargers, and oxygen sensors are not aftertreatment.

Alcohol-fueled means relating to a vehicle with an engine that is designed to run using an alcohol fuel. For purposes of this definition, alcohol fuels do not include fuels with a nominal alcohol content below 25 percent by volume.

All-terrain vehicle means a land-based or amphibious nonroad vehicle that meets the criteria listed in paragraph (1) of this definition; or, alternatively the criteria of paragraph (2) of this definition but not the criteria of paragraph (3) of this definition:

(1) Vehicles designed to travel on four low pressure tires, having a seat designed to be straddled by the operator and handlebars for steering controls, and intended for use by a single operator and no other passengers are all-terrain vehicles.

(2) Other all-terrain vehicles have three or more wheels and one or more seats, are designed for operation over rough terrain, are intended primarily for transportation, and have a maximum vehicle speed higher than 25 miles per hour. Golf carts generally do not meet these criteria since they are generally not designed for operation over rough terrain.

(3) Vehicles that meet the definition of ''offroad utility vehicle'' in this section are not all-terrain vehicles. However, § 1051.1(a) specifies that some offroad utility vehicles are required to meet the same requirements as all-terrain vehicles.

Amphibious vehicle means a vehicle with wheels or tracks that is designed primarily for operation on land and secondarily for operation in water.

Auxiliary emission-control device means any element of design that senses temperature, motive speed, engine RPM, transmission gear, or any other parameter for the purpose of activating, modulating, delaying, or deactivating the operation of any part of the emission-control system.

Brake power means the usable power output of the engine, not including power required to fuel, lubricate, or heat the engine, circulate coolant to the engine, or to operate aftertreatment devices.

Calibration means the set of specifications and tolerances specific to a particular design, version, or application of a component or assembly capable of functionally describing its operation over its working range.

Certification means relating to the process of obtaining a certificate of conformity for an engine family that complies with the emission standards and requirements in this part.

Certified emission level means the highest deteriorated emission level in an engine family for a given pollutant

from either transient or steady-state testing.

Compression-ignition means relating to a type of reciprocating, internal-combustion engine that is not a spark-ignition engine.

Crankcase emissions means airborne substances emitted to the atmosphere from any part of the engine crankcase's ventilation or lubrication systems. The crankcase is the housing for the crankshaft and other related internal parts.

Critical emission-related component means any of the following components:

(1) Electronic control units, aftertreatment devices, fuel-metering components, EGR-system components, crankcase-ventilation valves, all components related to charge-air compression and cooling, and all sensors and actuators associated with any of these components.

(2) Any other component whose primary purpose is to reduce emissions.

Days means calendar days unless otherwise specified. For example, where we specify working days, we mean calendar days excluding weekends and U.S. national holidays.

Designated Compliance Officer means the Manager, Light-Duty Engine Group, U.S. Environmental Protection Agency, 2000 Traverwood Drive, Ann Arbor, MI 48105.

Designated Enforcement Officer means the Director, Air Enforcement Division (2242A), U.S. Environmental Protection Agency, 1200 Pennsylvania Ave., NW.,Washington, DC 20460.

Deteriorated emission level means the emission level that results from applying the appropriate deterioration factor to the official emission result of the emission-data vehicle.

Deterioration factor means the relationship between emissions at the end of useful life and emissions at the low-hour test point, expressed in one of the following ways:

(1) For multiplicative deterioration factors, the ratio of emissions at the end of useful life to emissions at the low-hour test point.

(2) For additive deterioration factors, the difference between emissions at the end of useful life and emissions at the low-hour test point.

Emission-control system means any device, system, or element of design that controls or reduces the emissions of regulated pollutants from an engine.

Emission-data vehicle means a vehicle or engine that is tested for certification. This includes vehicles or engines tested to establish deterioration factors.

Emission-related maintenance means maintenance that substantially affects emissions or is likely to substantially affect emission deterioration.

Engine configuration means a unique combination of engine hardware and calibration within an engine family. Engines within a single engine configuration differ only with respect to normal production variability or factors unrelated to emissions.

Engine family has the meaning given in § 1051.230.

Evaporative means relating to fuel emissions that result from permeation of fuel through the fuel system materials and from ventilation of the fuel system.

Excluded means relating to an engine that either:

(1) Has been determined not to be a nonroad engine, as specified in 40 CFR 1068.30; or

(2) Is a nonroad engine that is excluded from this part 1051 under the provisions of § 1051.5.

Exempted has the meaning given in 40 CFR 1068.30.

Exhaust-gas recirculation means a technology that reduces emissions by routing exhaust gases that had been exhausted from the combustion chamber(s) back into the engine to be mixed with incoming air before or during combustion. The use of valve timing to increase the amount of residual exhaust gas in the combustion chamber(s) that is mixed with incoming air before or during combustion is not considered exhaust-gas recirculation for the purposes of this part.

Family emission limit (FEL) means an emission level declared by the manufacturer to serve in place of an otherwise applicable emission standard under the ABT program in subpart H of this part. The family emission limit must be expressed to the same number of decimal places as the emission

standard it replaces. The family emission limit serves as the emission standard for the engine family with respect to all required testing.

Fuel line means all hoses or tubing designed to contain liquid fuel or fuel vapor. This includes all hoses or tubing for the filler neck, for connections between dual fuel tanks, and for connecting a carbon canister to the fuel tank. This does not include hoses or tubing for routing crankcase vapors to the engine's intake or any other hoses or tubing that are open to the atmosphere.

Fuel system means all components involved in transporting, metering, and mixing the fuel from the fuel tank to the combustion chamber(s), including the fuel tank, fuel tank cap, fuel pump, fuel filters, fuel lines, carburetor or fuel-injection components, and all fuel-system vents. In the case where the fuel tank cap or other components (excluding fuel lines) are directly mounted on the fuel tank, they are considered to be a part of the fuel tank.

Fuel type means a general category of fuels such as gasoline or natural gas. There can be multiple grades within a single fuel type, such as winter-grade and all-season gasoline.

Good engineering judgment means judgments made consistent with generally accepted scientific and engineering principles and all available relevant information. See 40 CFR 1068.5 for the administrative process we use to evaluate good engineering judgment.

Hydrocarbon (HC) means the hydrocarbon group on which the emission standards are based for each fuel type. For alcohol-fueled engines, HC means total hydrocarbon equivalent (THCE). For all other engines, HC means nonmethane hydrocarbon (NMHC).

Identification number means a unique specification (for example, a model number/serial number combination) that allows someone to distinguish a particular vehicle or engine from other similar engines.

Low-hour means relating to an engine with stabilized emissions and represents the undeteriorated emission level. This would generally involve less than 24 hours or 240 kilometers of operation.

Low-permeability material has the meaning given in 40 CFR 1060.801.

Manufacturer has the meaning given in section 216(1) of the Act. In general, this term includes any person who manufactures a vehicle or engine for sale in the United States or otherwise introduces a new vehicle or engine into commerce in the United States. This includes importers that import vehicles or engines for resale.

Maximum engine power has the meaning given in 40 CFR 90.3 for 2010 and earlier model years and in §1051.140 for 2011 and later model years. Note that maximum engine power is based on the engine alone, without regard to any governing or other restrictions from the vehicle installation.

Maximum test speed has the meaning given in 40 CFR 1065.1001.

Model year means one of the following things:

(1) For freshly manufactured vehicles (see definition of ''new,'' paragraph (1)), model year means one of the following:

(i) Calendar year.

(ii) Your annual new model production period if it is different than the calendar year. This must include January 1 of the calendar year for which the model year is named. It may not begin before January 2 of the previous calendar year and it must end by December 31 of the named calendar year. For seasonal production periods not including January 1, *model year* means the calendar year in which the production occurs, unless you choose to certify the applicable emission family with the following model year. For example, if your production period is June 1, 2010, through November 30, 2010, your model year would be 2010 unless you choose to certify the emission family for model year 2011.

(2) For an engine originally certified and manufactured as a motor vehicle engine or a stationary engine that is later used or intended to be used in a vehicle subject to the standards and requirements of this part 1051, *model year* means the calendar year in which the engine was originally produced. For an engine originally manufactured as a motor vehicle engine or a stationary engine without having been certified that is later used or intended to be

used in a vehicle subject to the standards and requirements of this part 1051, *model year* means the calendar year in which the engine becomes subject to this part 1051. (See definition of ''new,'' paragraph (2)).

(3) For a nonroad engine that has been previously placed into service in an application covered by 40 CFR part 90, 91, 1048, or 1054, where that engine is installed in a piece of equipment that is covered by this part 1051, *model year* means the calendar year in which the engine was originally produced (see definition of ''new,'' paragraph (3)).

(4) For engines that are not freshly manufactured but are installed in new recreational vehicles, model year means the calendar year in which the engine is installed in the recreational vehicle (see definition of ''new,'' paragraph (4)).

(5) For imported engines:

(i) For imported engines described in paragraph (5)(i) of the definition of ''new,'' *model year* has the meaning given in paragraphs (1) through (4) of this definition.

(ii) For imported engines described in paragraph (5)(ii) of the definition of ''new,'' *model year* means the calendar year in which the vehicle is modified.

(iii) For imported engines described in paragraph (5)(iii) of the definition of ''new'' *model year* means the calendar year in which the engine is assembled in its imported configuration, unless specified otherwise in this part or in 40 CFR part 1068.

Motor vehicle has the meaning given in 40 CFR 85.1703(a).

New means relating to any of the following things:

(1) A freshly manufactured vehicle for which the ultimate purchaser has never received the equitable or legal title. This kind of vehicle might commonly be thought of as ''brand new.''

In the case of this paragraph (1), the vehicle is new from the time it is produced until the ultimate purchaser receives the title or the product is placed into service, whichever comes first.

(2) An engine originally manufactured as a motor vehicle engine or a stationary engine that is later used or intended to be used in a vehicle subject to the standards and requirements of this part 1051. In this case, the engine is no longer a motor vehicle or stationary engine and becomes new. The engine is no longer new when it is placed into service as a recreational vehicle covered by this part 1051.

(3) A nonroad engine that has been previously placed into service in an application covered by 40 CFR part 90, 91, 1048, or 1054, when that engine is installed in a piece of equipment that is covered by this part 1051. The engine is no longer new when it is placed into service in a recreational vehicle covered by this part 1051. For example, this would apply to a marine propulsion engine that is no longer used in a marine vessel.

(4) An engine not covered by paragraphs (1) through (3) of this definition that is intended to be installed in a new vehicle covered by this part 1051. This generally includes installation of used engines in new recreational vehicles. The engine is no longer new when the ultimate purchaser receives a title for the vehicle or it is placed into service, whichever comes first.

(5) An imported vehicle or engine, subject to the following provisions:

(i) An imported recreational vehicle or recreational-vehicle engine covered by a certificate of conformity issued under this part that meets the criteria of one or more of paragraphs (1) through (4) of this definition, where the original manufacturer holds the certificate, is new as defined by those applicable paragraphs.

(ii) An imported vehicle or engine covered by a certificate of conformity issued under this part, where someone other than the original manufacturer holds the certificate (such as when the engine is modified after its initial assembly), is new when it is imported. It is no longer new when the ultimate purchaser receives a title for the vehicle or engine or it is placed into service, whichever comes first.

(iii) An imported recreational vehicle or recreational-vehicle engine that is not covered by a certificate of conformity issued under this part at the time of importation is new. This addresses uncertified vehicles and engines initially placed into service that someone seeks to import into the United States. Importation of this kind

of vehicle or engine is generally prohibited by 40 CFR part 1068. However, the importation of such a vehicle or engine is not prohibited if it has a model year before 2006, since it is not subject to standards.

Noncompliant means relating to a vehicle that was originally covered by a certificate of conformity, but is not in the certified configuration or otherwise does not comply with the conditions of the certificate.

Nonconforming means relating to vehicle not covered by a certificate of conformity that would otherwise be subject to emission standards.

Nonmethane hydrocarbon has the meaning given in 40 CFR 1065.1001.

Nonroad means relating to nonroad engines or equipment that includes nonroad engines.

Nonroad engine has the meaning given in 40 CFR 1068.30. In general this means all internal-combustion engines except motor-vehicle engines, stationary engines, engines used solely for competition, or engines used in aircraft.

Off-highway motorcycle means a two-wheeled vehicle with a nonroad engine and a seat (excluding marine vessels and aircraft). (Note: highway motorcycles are regulated under 40 CFR part 86.)

Official emission result means the measured emission rate for an emission-data vehicle on a given duty cycle before the application of any deterioration factor.

Offroad utility vehicle means a nonroad vehicle that has four or more wheels, seating for two or more persons, is designed for operation over rough terrain, and has either a rear payload capacity of 350 pounds or more or seating for six or more passengers. Vehicles intended primarily for recreational purposes that are not capable of transporting six passengers (such as dune buggies) are not offroad utility vehicles. (NOTE: § 1051.1(a) specifies that some offroad utility vehicles are required to meet the requirements that apply for all-terrain vehicles.) Unless there is significant information to the contrary, we consider vehicles to be intended primarily for recreational purposes if they are marketed for recreational use, have a rear payload capacity no greater than 1,000 pounds, and meet at least five of the following criteria:

(1) Front and rear suspension travel is greater than 18 cm.

(2) The vehicle has no tilt bed.

(3) The vehicle has no mechanical power take-off (PTO) and no permanently installed hydraulic system for operating utility-oriented accessory devices.

(4) The engine has in-use operating speeds at or above 4,000 rpm.

(5) Maximum vehicle speed is greater than 35 miles per hour.

(6) The speed at which the engine produces peak power is above 4,500 rpm and the engine is equivalent to engines in ATVs certified by the same manufacturer. For the purpose of this paragraph (6), the engine is considered equivalent if it could be included in the same emission family based on the characteristics specified in § 1051.230(b).

(7) Gross Vehicle Weight Rating is no greater than 3,750 pounds. This is the maximum design loaded weight of the vehicle as defined in 40 CFR 86.1803–01, including passengers and cargo.

Owners manual means a document or collection of documents prepared by the engine manufacturer for the owner or operator to describe appropriate engine maintenance, applicable warranties, and any other information related to operating or keeping the engine. The owners manual is typically provided to the ultimate purchaser at the time of sale. The owners manual may be in paper or electronic format.

Oxides of nitrogen has the meaning given in 40 CFR 1065.1001.

Phase 1 means relating to Phase 1 standards of §§ 1051.103, 1051.105, or 1051.107, or other Phase 1 standards specified in subpart B of this part.

Phase 2 means relating to Phase 2 standards of § 1051.103, or other Phase 2 standards specified in subpart B of this part.

Phase 3 means relating to Phase 3 standards of § 1051.103, or other Phase 3 standards specified in subpart B of this part.

Placed into service means put into initial use for its intended purpose.

Point of first retail sale means the location at which the initial retail sale

occurs. This generally means an equipment dealership, but may also include an engine seller or distributor in cases where loose engines are sold to the general public for uses such as replacement engines.

Recreational means, for purposes of this part, relating to snowmobiles, all-terrain vehicles, off-highway motorcycles, and other vehicles that we regulate under this part. Note that 40 CFR parts 90 and 1054 apply to engines used in other recreational vehicles.

Revoke has the meaning given in 40 CFR 1068.30.

Round has the meaning given in 40 CFR 1065.1001, unless otherwise specified.

Scheduled maintenance means adjusting, repairing, removing, disassembling, cleaning, or replacing components or systems periodically to keep a part or system from failing, malfunctioning, or wearing prematurely. It also may mean actions you expect are necessary to correct an overt indication of failure or malfunction for which periodic maintenance is not appropriate.

Small-volume manufacturer means one of the following:

(1) For motorcycles and ATVs, a manufacturer that sold motorcycles or ATVs before 2003 and had annual U.S.-directed production of no more than 5,000 off-road motorcycles and ATVs (combined number) in 2002 and all earlier calendar years. For manufacturers owned by a parent company, the limit applies to the production of the parent company and all of its subsidiaries.

(2) For snowmobiles, a manufacturer that sold snowmobiles before 2003 and had annual U.S.-directed production of no more than 300 snowmobiles in 2002 and all earlier model years. For manufacturers owned by a parent company, the limit applies to the production of the parent company and all of its subsidiaries.

(3) A manufacturer that we designate to be a small-volume manufacturer under § 1051.635.

Snowmobile means a vehicle designed to operate outdoors only over snow-covered ground, with a maximum width of 1.5 meters or less.

Spark-ignition means relating to a gasoline-fueled engine or any other type of engine with a spark plug (or other sparking device) and with operating characteristics significantly similar to the theoretical Otto combustion cycle. Spark-ignition engines usually use a throttle to regulate intake air flow to control power during normal operation.

Suspend has the meaning given in 40 CFR 1068.30.

Test sample means the collection of engines selected from the population of an engine family for emission testing. This may include testing for certification, production-line testing, or in-use testing.

Test vehicle or engine means an engine in a test sample.

Total hydrocarbon has the meaning given in 40 CFR 1065.1001. This generally means the combined mass of organic compounds measured by the specified procedure for measuring total hydrocarbon, expressed as a hydrocarbon with a hydrogen-to-carbon mass ratio of 1.85:1.

Total hydrocarbon equivalent has the meaning given in 40 CFR 1065.1001.

Ultimate purchaser means, with respect to any new nonroad equipment or new nonroad engine, the first person who in good faith purchases such new nonroad equipment or new nonroad engine for purposes other than resale.

Ultraviolet light means electromagnetic radiation with a wavelength between 300 and 400 nanometers.

United States has the meaning given in 40 CFR 1068.30.

Upcoming model year means for an engine family the model year after the one currently in production.

U.S.-directed production volume means the number of vehicle units, subject to the requirements of this part, produced by a manufacturer for which the manufacturer has a reasonable assurance that sale was or will be made to ultimate purchasers in the United States. This includes vehicles for which the location of first retail sale is in a state that has applicable state emission regulations for that model year, unless we specify otherwise.

Useful life means the period during which a vehicle is required to comply with all applicable emission standards, specified as a given number of calendar years and kilometers (whichever comes

first). In some cases, useful life is also limited by a given number of hours of engine operation. If an engine has no odometer (or hour meter), the specified number of kilometers (or hours) does not limit the period during which an in-use vehicle is required to comply with emission standards, unless the degree of service accumulation can be verified separately. The useful life for an engine family must be at least as long as both of the following:

(1) The expected average service life before the vehicle is remanufactured or retired from service.

(2) The minimum useful life value.

Void has the meaning given in 40 CFR 1068.30.

Volatile liquid fuel means any fuel other than diesel or biodiesel that is a liquid at atmospheric pressure and has a Reid Vapor Pressure higher than 2.0 pounds per square inch.

We (us, our) means the Administrator of the Environmental Protection Agency and any authorized representatives.

Wide-open throttle means maximum throttle opening. Unless this is specified at a given speed, it refers to maximum throttle opening at maximum speed. For electronically controlled or other engines with multiple possible fueling rates, wide-open throttle also means the maximum fueling rate at maximum throttle opening under test conditions.

[70 FR 40507, July 13, 2005, as amended at 73 FR 59257, Oct. 8, 2008; 75 FR 23024, Apr. 30, 2010]

§ 1051.805 What symbols, acronyms, and abbreviations does this part use?

The following symbols, acronyms, and abbreviations apply to this part:

°—degrees.
ASTM—American Society for Testing and Materials.
ATV—all-terrain vehicle.
cc—cubic centimeters.
CFR—Code of Federal Regulations.
CH_4 methane.
cm—centimeter.
C—Celsius.
CO—carbon monoxide.
CO_2—carbon dioxide.
EPA—Environmental Protection Agency.
F—Fahrenheit.
g—grams.
g/gal/day—grams per gallon per test day.
g/m^2/day—grams per meter-square per test day.
HC—hydrocarbon.
Hg—mercury.
hr—hours.
km—kilometer.
kW—kilowatt.
LPG—liquefied petroleum gas.
m—meters.
mm—millimeters.
mW—milliwatts.
N_2O nitrous oxide.
NARA—National Archives and Records Administration.
NMHC—nonmethane hydrocarbons.
NO_X—oxides of nitrogen (NO and NO_X).
psig—pounds per square inches of gauge pressure.
rpm—revolutions per minute.
SAE—Society of Automotive Engineers.
SI—spark-ignition.
THC—total hydrocarbon.
THCE—total hydrocarbon equivalent.
U.S.C.—United States Code.

[67 FR 68347, Nov. 8, 2002, as amended at 70 FR 40510, July 13, 2005; 74 FR 56511, Oct. 30, 2009]

§ 1051.815 What provisions apply to confidential information?

(a) Clearly show what you consider confidential by marking, circling, bracketing, stamping, or some other method.

(b) We will store your confidential information as described in 40 CFR part 2. Also, we will disclose it only as specified in 40 CFR part 2. This applies both to any information you send us and to any information we collect from inspections, audits, or other site visits.

(c) If you send us a second copy without the confidential information, we will assume it contains nothing confidential whenever we need to release information from it.

(d) If you send us information without claiming it is confidential, we may make it available to the public without further notice to you, as described in 40 CFR 2.204.

[70 FR 40511, July 13, 2005]

§ 1051.820 How do I request a hearing?

(a) You may request a hearing under certain circumstances, as described elsewhere in this part. To do this, you must file a written request, including a description of your objection and any supporting data, within 30 days after we make a decision.

(b) For a hearing you request under the provisions of this part, we will approve your request if we find that your request raises a substantial factual issue.

(c) If we agree to hold a hearing, we will use the procedures specified in 40 CFR part 1068, subpart G.

[70 FR 40511, July 13, 2005]

§ 1051.825 What reporting and recordkeeping requirements apply under this part?

Under the Paperwork Reduction Act (44 U.S.C. 3501 *et seq.*), the Office of Management and Budget approves the reporting and recordkeeping specified in the applicable regulations. The following items illustrate the kind of reporting and recordkeeping we require for vehicles regulated under this part:

(a) We specify the following requirements related to certification in this part 1051:

(1) In §§ 1051.20 and 1051.25 we describe special provisions for manufacturers to certify recreational engines instead of vehicles.

(2) [Reserved]

(3) In § 1051.145 we include various reporting and recordkeeping requirements related to interim provisions.

(4) In subpart C of this part we identify a wide range of information required to certify vehicles.

(5) In §§ 1051.345 and 1051.350 we specify certain records related to production-line testing.

(6) [Reserved]

(7) In § 1051.501 we specify information needs for establishing various changes to published vehicle-based test procedures.

(8) In subpart G of this part we identify several reporting and recordkeeping items for making demonstrations and getting approval related to various special compliance provisions.

(9) In §§ 1051.725, 1051.730, and 1051.735 we specify certain records related to averaging, banking, and trading.

(b) [Reserved]

(c) We specify the following requirements related to testing in 40 CFR part 1065:

(1) In 40 CFR 1065.2 we give an overview of principles for reporting information.

(2) In 40 CFR 1065.10 and 1065.12 we specify information needs for establishing various changes to published engine-based test procedures.

(3) In 40 CFR 1065.25 we establish basic guidelines for storing test information.

(4) In 40 CFR 1065.695 we identify data that may be appropriate for collecting during testing of in-use engines or vehicles using portable analyzers.

(d) We specify the following requirements related to the general compliance provisions in 40 CFR part 1068:

(1) In 40 CFR 1068.5 we establish a process for evaluating good engineering judgment related to testing and certification.

(2) In 40 CFR 1068.25 we describe general provisions related to sending and keeping information

(3) In 40 CFR 1068.27 we require manufacturers to make engines or vehicles available for our testing or inspection if we make such a request.

(4) In 40 CFR 1068.105 we require manufacturers to keep certain records related to duplicate labels from engine manufacturers.

(5) In 40 CFR 1068.120 we specify recordkeeping related to rebuilding engines.

(6) In 40 CFR part 1068, subpart C, we identify several reporting and recordkeeping items for making demonstrations and getting approval related to various exemptions.

(7) In 40 CFR part 1068, subpart D, we identify several reporting and recordkeeping items for making demonstrations and getting approval related to importing engines or vehicles.

(8) In 40 CFR 1068.450 and 1068.455 we specify certain records related to testing production-line engines in a selective enforcement audit.

(9) In 40 CFR 1068.501 we specify certain records related to investigating and reporting emission-related defects.

(10) In 40 CFR 1068.525 and 1068.530 we specify certain records related to recalling nonconforming vehicles.

[73 FR 59258, Oct. 8, 2008]

PART 1054—CONTROL OF EMISSIONS FROM NEW, SMALL NONROAD SPARK-IGNITION ENGINES AND EQUIPMENT

Subpart A—Overview and Applicability

Sec.
1054.1 Does this part apply for my engines and equipment?
1054.2 Who is responsible for compliance?
1054.5 Which nonroad engines are excluded from this part's requirements?
1054.10 How is this part organized?
1054.15 Do any other CFR parts apply to me?
1054.20 What requirements apply to my equipment?
1054.30 Submission of information.

Subpart B—Emission Standards and Related Requirements

1054.101 What emission standards and requirements must my engines meet?
1054.103 What exhaust emission standards must my handheld engines meet?
1054.105 What exhaust emission standards must my nonhandheld engines meet?
1054.107 What is the useful life period for meeting exhaust emission standards?
1054.110 What evaporative emission standards must my handheld equipment meet?
1054.112 What evaporative emission standards must my nonhandheld equipment meet?
1054.115 What other requirements apply?
1054.120 What emission-related warranty requirements apply to me?
1054.125 What maintenance instructions must I give to buyers?
1054.130 What installation instructions must I give to equipment manufacturers?
1054.135 How must I label and identify the engines I produce?
1054.140 What is my engine's maximum engine power and displacement?
1054.145 Are there interim provisions that apply only for a limited time?

Subpart C—Certifying Emission Families

1054.201 What are the general requirements for obtaining a certificate of conformity?
1054.205 What must I include in my application?
1054.210 May I get preliminary approval before I complete my application?
1054.220 How do I amend the maintenance instructions in my application?
1054.225 How do I amend my application for certification to include new or modified engines or fuel systems or change an FEL?
1054.230 How do I select emission families?
1054.235 What exhaust emission testing must I perform for my application for a certificate of conformity?
1054.240 How do I demonstrate that my emission family complies with exhaust emission standards?
1054.245 How do I determine deterioration factors from exhaust durability testing?
1054.250 What records must I keep and what reports must I send to EPA?
1054.255 What decisions may EPA make regarding my certificate of conformity?

Subpart D—Production-line Testing

1054.300 Applicability.
1054.301 When must I test my production-line engines?
1054.305 How must I prepare and test my production-line engines?
1054.310 How must I select engines for production-line testing?
1054.315 How do I know when my engine family fails the production-line testing requirements?
1054.320 What happens if one of my production-line engines fails to meet emission standards?
1054.325 What happens if an engine family fails the production-line testing requirements?
1054.330 May I sell engines from an engine family with a suspended certificate of conformity?
1054.335 How do I ask EPA to reinstate my suspended certificate?
1054.340 When may EPA revoke my certificate under this subpart and how may I sell these engines again?
1054.345 What production-line testing records must I send to EPA?
1054.350 What records must I keep?

Subpart E—In-use Testing

1054.401 General provisions.

Subpart F—Test Procedures

1054.501 How do I run a valid emission test?
1054.505 How do I test engines?
1054.520 What testing must I perform to establish deterioration factors?

Subpart G—Special Compliance Provisions

1054.601 What compliance provisions apply?
1054.610 What is the exemption for delegated final assembly?
1054.612 What special provisions apply for equipment manufacturers modifying certified nonhandheld engines?
1054.615 What is the exemption for engines certified to standards for Large SI engines?
1054.620 What are the provisions for exempting engines used solely for competition?

1054.625 What requirements apply under the Transition Program for Equipment Manufacturers?
1054.626 What special provisions apply to equipment imported under the Transition Program for Equipment Manufacturers?
1054.630 What provisions apply for importation of individual items for personal use?
1054.635 What special provisions apply for small-volume engine and equipment manufacturers?
1054.640 What special provisions apply to branded engines?
1054.645 What special provisions apply for converting an engine to use an alternate fuel?
1054.650 What special provisions apply for adding or changing governors?
1054.655 What special provisions apply for installing and removing altitude kits?
1054.660 What are the provisions for exempting emergency rescue equipment?
1054.690 What bond requirements apply for certified engines?

Subpart H—Averaging, Banking, and Trading for Certification

1054.701 General provisions.
1054.705 How do I generate and calculate exhaust emission credits?
1054.706 How do I generate and calculate evaporative emission credits?
1054.710 How do I average emission credits?
1054.715 How do I bank emission credits?
1054.720 How do I trade emission credits?
1054.725 What must I include in my application for certification?
1054.730 What ABT reports must I send to EPA?
1054.735 What records must I keep?
1054.740 What special provisions apply for generating and using emission credits?
1054.745 What can happen if I do not comply with the provisions of this subpart?

Subpart I—Definitions and Other Reference Information

1054.801 What definitions apply to this part?
1054.805 What symbols, acronyms, and abbreviations does this part use?
1054.815 What provisions apply to confidential information?
1054.820 How do I request a hearing?
1054.825 What reporting and recordkeeping requirements apply under this part?
APPENDIX I TO PART 1054—SUMMARY OF PREVIOUS EMISSION STANDARDS
APPENDIX II TO PART 1054—DUTY CYCLES FOR LABORATORY TESTING

AUTHORITY: 42 U.S.C. 7401–7671q.

SOURCE: 73 FR 59259, Oct. 8, 2008, unless otherwise noted.

Subpart A—Overview and Applicability

§ 1054.1 Does this part apply for my engines and equipment?

(a) Except as provided in § 1054.5, the regulations in this part 1054 apply as follows:

(1) The requirements of this part related to exhaust emissions apply to new, spark-ignition engines with maximum engine power at or below 19 kW. This includes auxiliary marine spark-ignition engines.

(2) The requirements of this part related to evaporative emissions apply as specified in §§ 1054.110 and 1054.112 to fuel systems used with engines subject to exhaust emission standards in this part if the engines use a volatile liquid fuel (such as gasoline).

(3) This part 1054 applies starting with the model years noted in the following table:

TABLE 1 TO § 1054.1—PART 1054 APPLICABILITY BY MODEL YEAR

Engine type	Engine displacement	Model year
Handheld	all	2010
Nonhandheld	displacement < 225 cc.	2012
Nonhandheld	displacement ≥ 225 cc.	2011

(4) This part 1054 applies for other spark-ignition engines as follows:

(i) The provisions of §§ 1054.620 and 1054.801 apply for new engines used solely for competition beginning January 1, 2010.

(ii) The provisions of §§ 1054.660 and 1054.801 apply for new engines used in emergency rescue equipment beginning January 1, 2010.

(5) We specify provisions in § 1054.145(e) and (f) and in § 1054.740 that allow for meeting the requirements of this part before the dates shown in Table 1 to this section. Engines, fuel-system components, or equipment certified to these standards are subject to all the requirements of this part as if these optional standards were mandatory.

(b) Although the definition of nonroad engine in 40 CFR 1068.30 excludes certain engines used in stationary applications, stationary engines are required under 40 CFR part 60, subpart JJJJ, to comply with this part starting with the model years shown in Table 1 to this section.

(c) See 40 CFR part 90 for requirements that apply to engines not yet subject to the requirements of this part 1054.

(d) In certain cases, the regulations in this part 1054 apply to engines with maximum engine power above 19 kW that would otherwise be covered by 40 CFR part 1048 or 1051. See 40 CFR 1048.615 and 1051.145(a)(3) for provisions related to these allowances.

(e) In certain cases, the regulations in this part 1054 apply to propulsion marine engines that would otherwise be covered by 40 CFR part 1045. See 40 CFR 1045.610 for provisions related to these allowances.

[73 FR 59259, Oct. 8, 2008, as amended at 75 FR 23024, Apr. 30, 2010]

§ 1054.2 Who is responsible for compliance?

The requirements and prohibitions of this part apply to manufacturers of engines and equipment, as described in § 1054.1. The requirements of this part are generally addressed to manufacturers subject to this part's requirements. The term ''you'' generally means the certifying manufacturer. For provisions related to exhaust emissions, this generally means the engine manufacturer, especially for issues related to certification (including production-line testing, reporting, etc.). For provisions related to certification with respect to evaporative emissions, this generally means the equipment manufacturer. Equipment manufacturers must meet applicable requirements as described in § 1054.20. Engine manufacturers that assemble an engine's complete fuel system are considered to be the equipment manufacturer with respect to evaporative emissions (see 40 CFR 1060.5). Note that certification requirements for component manufacturers are described in 40 CFR part 1060.

§ 1054.5 Which nonroad engines are excluded from this part's requirements?

This part does not apply to the following nonroad engines:

(a) Engines that are certified to meet the requirements of 40 CFR part 1051 (for example, engines used in snowmobiles and all-terrain vehicles). Engines that are otherwise subject to 40 CFR part 1051 but not required to be certified (such as engines exempted under 40 CFR part 1051) are also excluded from this part 1054, unless the regulations in 40 CFR part 1051 specifically require them to comply with the requirements of this part 1054.

(b) Engines that are certified to meet the requirements of 40 CFR part 1048, subject to the provisions of § 1054.615.

(c) Propulsion marine engines. See 40 CFR parts 91 and 1045. Note that the evaporative emission standards of this part also do not apply with respect to auxiliary marine engines as described in § 1054.20.

(d) Engines used in reduced-scale models of vehicles that are not capable of transporting a person.

§ 1054.10 How is this part organized?

This part 1054 is divided into the following subparts:

(a) Subpart A of this part defines the applicability of this part 1054 and gives an overview of regulatory requirements.

(b) Subpart B of this part describes the emission standards and other requirements that must be met to certify engines under this part. Note that § 1054.145 discusses certain interim requirements and compliance provisions that apply only for a limited time.

(c) Subpart C of this part describes how to apply for a certificate of conformity.

(d) Subpart D of this part describes general provisions for testing production-line engines.

(e) Subpart E of this part describes general provisions for testing in-use engines.

(f) Subpart F of this part describes how to test your engines (including references to other parts of the Code of Federal Regulations).

(g) Subpart G of this part and 40 CFR part 1068 describe requirements, prohibitions, and other provisions that apply to engine manufacturers, equipment manufacturers, owners, operators, rebuilders, and all others.

(h) Subpart H of this part describes how you may generate and use exhaust and evaporative emission credits to certify your engines and equipment.

(i) Subpart I of this part contains definitions and other reference information.

§ 1054.15 Do any other CFR parts apply to me?

(a) Part 1060 of this chapter describes standards and procedures that apply for controlling evaporative emissions from engines fueled by gasoline or other volatile liquid fuels and the associated fuel systems. See §§ 1054.110 and 1054.112 for information about how that part applies.

(b) Part 1065 of this chapter describes procedures and equipment specifications for testing engines to measure exhaust emissions. Subpart F of this part 1054 describes how to apply the provisions of part 1065 of this chapter to determine whether engines meet the exhaust emission standards in this part.

(c) The requirements and prohibitions of part 1068 of this chapter apply to everyone, including anyone who manufactures, imports, installs, owns, operates, or rebuilds any of the engines subject to this part 1054, or equipment containing these engines. Part 1068 of this chapter describes general provisions, including these seven areas:

(1) Prohibited acts and penalties for engine manufacturers, equipment manufacturers, and others.

(2) Rebuilding and other aftermarket changes.

(3) Exclusions and exemptions for certain engines.

(4) Importing engines.

(5) Selective enforcement audits of your production.

(6) Defect reporting and recall.

(7) Procedures for hearings.

(d) Other parts of this chapter apply if referenced in this part.

§ 1054.20 What requirements apply to my equipment?

(a) If you manufacture equipment using engines certified under this part, your equipment must meet all applicable emission standards with the engine and fuel system installed.

(b) Except as specified in paragraph (f) of this section, all equipment subject to the exhaust standards of this part must meet the evaporative emission standards of 40 CFR part 1060, as described in §§ 1054.110 and 1054.112.

(c) Except as specified in paragraph (f) of this section, you must identify and label equipment you produce under this section consistent with the requirements of 40 CFR 1060.135.

(d) You may need to certify your equipment or fuel systems as described in 40 CFR 1060.1 and 1060.601.

(e) You must follow all emission-related installation instructions from the certifying manufacturers as described in § 1054.130, 40 CFR 1060.130, and 40 CFR 1068.105. Failure to follow these instructions subjects you to civil penalties as described in 40 CFR part 1068, subpart B.

(f) Motor vehicles and marine vessels may contain engines subject to the exhaust emission standards in this part 1054. Evaporative emission standards apply to these products as follows:

(1) Marine vessels using spark-ignition engines are subject to the requirements of 40 CFR part 1045. The vessels are not required to comply with the evaporative emission standards and related requirements of this part 1054.

(2) Motor vehicles are subject to the requirements of 40 CFR part 86. They are not required to comply with the evaporative emission standards and related requirements of this part 1054.

§ 1054.30 Submission of information.

(a) This part includes various requirements to record data or other information. Refer to § 1054.825 and 40 CFR 1068.25 regarding recordkeeping requirements. If recordkeeping requirements are not specified, store these records in any format and on any media and keep them readily available for one year after you send an associated application for certification, or one year after you generate the data if they do not support an application for

certification. You must promptly send us organized, written records in English if we ask for them. We may review them at any time.

(b) The regulations in § 1054.255 and 40 CFR 1068.101 describe your obligation to report truthful and complete information and the consequences of failing to meet this obligation. This includes information not related to certification.

(c) Send all reports and requests for approval to the Designated Compliance Officer (see § 1054.801).

(d) Any written information we require you to send to or receive from another company is deemed to be a required record under this section. Such records are also deemed to be submissions to EPA. We may require you to send us these records whether or not you are a certificate holder.

Subpart B—Emission Standards and Related Requirements

§ 1054.101 What emission standards and requirements must my engines meet?

(a) *Exhaust emissions.* You must show that your engines meet the following exhaust emission standards, except as specified in paragraphs (b) through (d) of this section:

(1) Handheld engines must meet the exhaust emission standards in § 1054.103.

(2) Nonhandheld engines must meet the exhaust emission standards in § 1054.105.

(3) All engines must meet the requirements in § 1054.115.

(b) *Evaporative emissions.* Except as specified in § 1054.20, new equipment using engines that run on a volatile liquid fuel (such as gasoline) must meet the evaporative emission requirements of 40 CFR part 1060. The requirements of 40 CFR part 1060 that apply are considered also to be requirements of this part 1054. Marine vessels using auxiliary marine engines subject to this part must meet the evaporative emission requirements in 40 CFR 1045.112 instead of the evaporative emission requirements in this part. We specify evaporative emission requirements for handheld and nonhandheld equipment separately in §§ 1054.110 and 1054.112.

(c) *Wintertime engines.* Emission standards regulating HC and NO_X exhaust emissions are optional for wintertime engines. However, if you certify an emission family to such standards, those engines are subject to all the requirements of this part as if these optional standards were mandatory.

(d) *Two-stroke snowthrower engines.* Two-stroke snowthrower engines may meet exhaust emission standards that apply to handheld engines with the same engine displacement instead of the nonhandheld standards that would otherwise apply.

(e) *Relationship between handheld and nonhandheld engines.* Any engines certified to the nonhandheld emission standards in § 1054.105 may be used in either handheld or nonhandheld equipment. Engines above 80 cc certified to the handheld emission standards in § 1054.103 may not be used in nonhandheld equipment. 40 CFR 1068.101 prohibits the introduction into commerce or importation of such nonhandheld equipment except as specified in this paragraph (e). For purposes of the requirements of this part, engines at or below 80 cc are considered handheld engines, but may be installed in either handheld or nonhandheld equipment. These engines are subject to handheld exhaust emission standards; the equipment in which they are installed are subject to handheld evaporative emission standards starting with the model years specified in this part 1054. *See* § 1054.701(c) for special provisions related to emission credits for engine families with displacement at or below 80 cc where those engines are installed in nonhandheld equipment.

(f) *Interim provisions.* It is important that you read § 1054.145 to determine if there are other interim requirements or interim compliance provisions that apply for a limited time.

[73 FR 59259, Oct. 8, 2008, as amended at 75 FR 68462, Nov. 8, 2010]

§ 1054.103 What exhaust emission standards must my handheld engines meet?

(a) *Emission standards.* Exhaust emissions from your handheld engines may not exceed the emission standards in Table 1 to this section. Measure emissions using the applicable steady-state test procedures described in subpart F of this part.

TABLE 1 TO § 1054.103—PHASE 3 EMISSION STANDARDS FOR HANDHELD ENGINES (g/kW-hr)

Engine displacement class	$HC+NO_X$	CO
Class III	50	805
Class IV	50	805
Class V	72	603

(b) *Averaging, banking, and trading.* You may generate or use emission credits under the averaging, banking, and trading (ABT) program for $HC+NO_X$ emissions as described in subpart H of this part. You may not generate or use emission credits for CO emissions. To generate or use emission credits, you must specify a family emission limit for each engine family you include in the ABT program. These family emission limits serve as the emission standards for the engine family with respect to all required testing instead of the standards specified in this section. An engine family meets emission standards even if its family emission limit is higher than the standard, as long as you show that the whole averaging set of applicable engine families meets the emission standards using emission credits and the engines within the family meet the family emission limit. The following FEL caps are the maximum values you may specify for family emission limits:

(1) 336 g/kW-hr for Class III engines.

(2) 275 g/kW-hr for Class IV engines.

(3) 186 g/kW-hr for Class V engines.

(c) *Fuel types.* The exhaust emission standards in this section apply for engines using the fuel type on which the engines in the emission family are designed to operate. You must meet the numerical emission standards for hydrocarbons in this section based on the following types of hydrocarbon emissions for engines powered by the following fuels:

(1) Alcohol-fueled engines: THCE emissions.

(2) Natural gas-fueled engines: NMHC emissions.

(3) Other engines: THC emissions.

(d) *Useful life.* Your engines must meet the exhaust emission standards in paragraph (a) of this section over their full useful life as described in § 1054.107.

(e) *Applicability for testing.* The emission standards in this subpart apply to all testing, including certification, production-line, and in-use testing.

§ 1054.105 What exhaust emission standards must my nonhandheld engines meet?

(a) *Emission standards.* Exhaust emissions from your engines may not exceed the emission standards in Table 1 to this section. Measure emissions using the applicable steady-state test procedures described in subpart F of this part.

TABLE 1 TO § 1054.105—PHASE 3 EMISSION STANDARDS FOR NONHANDHELD ENGINES (g/kW-hr)

Engine displacement class	$HC+NO_X$	Primary CO standard	CO standard for marine generator engines
Class I	10.0	610	5.0
Class II	8.0	610	5.0

(b) *Averaging, banking, and trading.* You may generate or use emission credits under the averaging, banking, and trading (ABT) program for $HC+NO_X$ emissions as described in subpart H of this part. You may not generate or use emission credits for CO emissions. To generate or use emission credits, you must specify a family emission limit for each engine family you include in the ABT program. These family emission limits serve as the emission standards for the engine family with respect to all required testing

instead of the standards specified in this section. An engine family meets emission standards even if its family emission limit is higher than the standard, as long as you show that the whole averaging set of applicable engine families meets the emission standards using emission credits, and the engines within the family meet the family emission limit. The following FEL caps are the maximum values you may specify for family emission limits:

(1) 40.0 g/kW-hr for Class I engines with displacement below 100 cc.

(2) 16.1 g/kW-hr for Class I engines with displacement at or above 100 cc.

(3) 12.1 for Class II engines.

(c) *Fuel types.* The exhaust emission standards in this section apply for engines using the fuel type on which the engines in the emission family are designed to operate. You must meet the numerical emission standards for hydrocarbons in this section based on the following types of hydrocarbon emissions for engines powered by the following fuels:

(1) Alcohol-fueled engines: THCE emissions.

(2) Natural gas-fueled engines: NMHC emissions.

(3) Other engines: THC emissions.

(d) *Useful life.* Your engines must meet the exhaust emission standards in paragraph (a) of this section over their full useful life as described in § 1054.107.

(e) *Applicability for testing.* The emission standards in this subpart apply to all testing, including certification, production-line, and in-use testing.

§ 1054.107 What is the useful life period for meeting exhaust emission standards?

This section describes an engine family's useful life, which is the period during which engines are required to comply with all emission standards that apply. The useful life period is five years or a number of hours of operation, whichever comes first, as described in this section.

(a) Determine the useful life period for exhaust requirements as follows:

(1) Except as specified in paragraphs (a)(2) and (3) of this section, the useful life period for exhaust requirements is the number of engine operating hours from Table 1 to this section that most closely matches the expected median in-use life of your engines. The median in-use life of your engine is the shorter of the following values:

(i) The median in-use life of equipment into which the engine is expected to be installed.

(ii) The median in-use life of the engine without being scrapped or rebuilt.

TABLE 1 TO § 1054.107—NOMINAL USEFUL LIFE PERIODS

Nonhandheld			
	Residential	Extended life residential [1]	Commercial
Class I	125	250	500
Class II	250	500	1,000
Handheld			
	Light use	Medium use	Heavy use
Class III—V	50	125	300

[1] Or "General Purpose."

(2) You may select a longer useful life for nonhandheld engines than that specified in paragraph (a)(1) of this section in 100-hour increments not to exceed 3,000 hours for Class I engines or 5,000 hours for Class II engines. For engine families generating emission credits, you may do this only with our approval. These are considered ''Heavy Commercial'' engines.

(3) The minimum useful life period for engines with maximum engine power above 19 kW is 1,000 hours (see § 1054.1(d)).

(b) Keep any available information to support your selection and make it available to us if we ask for it. We may require you to certify to a different useful life value from the table if we determine that the selected useful life

value is not justified by the data. We may consider any relevant information, including your product warranty statements and marketing materials regarding engine life, in making this determination. We may void your certificate if we determine that you intentionally selected an incorrect value. Support your selection based on any of the following information:

(1) Surveys of the life spans of the equipment in which the subject engines are installed.

(2) Engineering evaluations of field aged engines to ascertain when engine performance deteriorates to the point where usefulness and/or reliability is impacted to a degree sufficient to necessitate overhaul or replacement.

(3) Failure reports from engine customers.

(4) Engineering evaluations of the durability, in hours, of specific engine technologies, engine materials, or engine designs.

§ 1054.110 What evaporative emission standards must my handheld equipment meet?

The following evaporative emission requirements apply for handheld equipment over a useful life of five years:

(a) *Fuel line permeation.* Nonmetal fuel lines must meet the permeation requirements for EPA Nonroad Fuel Lines or EPA Cold-Weather Fuel Lines as specified in 40 CFR 1060.102. These requirements apply starting in the 2012 model year, except that they apply starting in the 2013 model year for emission families involving small-volume emission families that are not used in cold-weather equipment. For fuel lines used in cold-weather equipment, you may generate or use emission credits to show compliance with these permeation standards through 2015 as described in § 1054.145(h).

(b) *Tank permeation.* Fuel tanks must meet the permeation requirements specified in 40 CFR 1060.103. These requirements apply for handheld equipment starting in the 2010 model year, except that they apply starting in the 2011 model year for structurally integrated nylon fuel tanks, in the 2012 model year for handheld equipment using nonhandheld engines, and in the 2013 model year for all small-volume emission families. For nonhandheld equipment using engines at or below 80 cc, the requirements of this paragraph (b) apply starting in the 2012 model year. (Note: 40 CFR 90.129 specifies emission standards for certain 2009 model year engines and equipment.) You may generate or use emission credits to show compliance with the requirements of this paragraph (b) under the averaging, banking, and trading program as described in subpart H of this part. FEL caps apply as specified in § 1054.112(b)(1) through (3) starting in the 2015 model year.

(c) *Running loss.* The running loss requirements specified in 40 CFR part 1060 do not apply for handheld equipment.

(d) *Other requirements.* The provisions of 40 CFR 1060.101(e) and (f) include general requirements that apply to all nonroad equipment subject to evaporative emission standards.

(e) *Engine manufacturers.* To the extent that engine manufacturers produce engines with fuel lines or fuel tanks, those fuel-system components must meet the requirements specified in this section. The timing of new standards is based on the date of manufacture of the engine.

§ 1054.112 What evaporative emission standards must my nonhandheld equipment meet?

The evaporative emission requirements of this section apply starting in the 2011 model year for equipment using Class II engines and in the 2012 model year for equipment using Class I engines over a useful life of five years. See § 1054.110 for requirements that apply for nonhandheld equipment using engines at or below 80 cc.

(a) *Fuel line permeation.* Nonmetal fuel lines must meet the permeation requirements for EPA Nonroad Fuel Lines as specified in 40 CFR 1060.102.

(b) *Tank permeation.* Fuel tanks must meet the permeation requirements specified in 40 CFR 1060.103. Equipment manufacturers may generate or use emission credits to show compliance with the requirements of this paragraph (b) under the averaging, banking, and trading program as described in subpart H of this part. Starting in the 2014 model year for Class II equipment

and in the 2015 model year for Class I equipment, the following FEL caps represent the maximum values for family emission limits that you may use for your fuel tanks:

(1) Except as specified in paragraphs (b)(2) of this section, you may not use fuel tanks with a family emission limit that exceeds 5.0 g/m²/day for testing at a nominal temperature of 28 °C, or 8.3 g/m²/day for testing at a nominal temperature of 40 °C.

(2) For small-volume emission families, you may not use fuel tanks with a family emission limit that exceeds 8.0 g/m²/day for testing at a nominal temperature of 28 °C, or 13.3 g/m²/day for testing at a nominal temperature of 40 °C.

(3) FEL caps do not apply to fuel caps that are certified separately to meet permeation standards.

(c) *Running loss.* Running loss requirements apply as specified in 40 CFR 1060.104.

(d) *Diurnal emissions.* Nonhandheld equipment may optionally be certified to the diurnal emission standards specified in 40 CFR 1060.105, in which case the permeation standards specified in paragraphs (a) and (b) of this section do not apply.

(e) *Other requirements.* The provisions of 40 CFR 1060.101(e) and (f) include general requirements that apply to all nonroad equipment subject to evaporative emission standards.

(f) *Engine manufacturers.* To the extent that engine manufacturers produce engines with fuel lines or fuel tanks, those fuel-system components must meet the requirements specified in this section. The timing of new standards is based on the date of manufacture of the engine.

[73 FR 59259, Oct. 8, 2008, as amended at 73 FR 73789, Dec. 4, 2008]

§ 1054.115 What other requirements apply?

The following requirements apply with respect to engines that are required to meet the emission standards of this part:

(a) *Crankcase emissions.* Crankcase emissions may not be discharged directly into the ambient atmosphere from any engine throughout its useful life, except as follows:

(1) Snowthrower engines may discharge crankcase emissions to the ambient atmosphere if the emissions are added to the exhaust emissions (either physically or mathematically) during all emission testing. If you take advantage of this exception, you must do the following things:

(i) Manufacture the engines so that all crankcase emissions can be routed into the applicable sampling systems specified in 40 CFR part 1065.

(ii) Account for deterioration in crankcase emissions when determining exhaust deterioration factors.

(2) For purposes of this paragraph (a), crankcase emissions that are routed to the exhaust upstream of exhaust aftertreatment during all operation are not considered to be discharged directly into the ambient atmosphere.

(b) *Adjustable parameters.* Engines that have adjustable parameters must meet all the requirements of this part for any adjustment in the physically adjustable range. An operating parameter is not considered adjustable if you permanently seal it or if it is not normally accessible using ordinary tools. We may require that you set adjustable parameters to any specification within the adjustable range during any testing, including certification testing, production-line testing, or in-use testing. You may ask us to limit idle-speed or carburetor adjustments to a smaller range than the physically adjustable range if you show us that the engine will not be adjusted outside of this smaller range during in-use operation without significantly degrading engine performance.

(c) *Altitude adjustments.* Engines must meet applicable emission standards for valid tests conducted under the ambient conditions specified in 40 CFR 1065.520. Except as specified in § 1054.145(c), engines must meet applicable emission standards at all specified atmospheric pressures, except that for atmospheric pressures below 94.0 kPa you may rely on an altitude kit for all testing if you meet the requirements specified in § 1054.205(r). If you rely on an altitude kit for certification, you must identify in the owners manual the altitude range for which you expect

proper engine performance and emission control with and without the altitude kit; you must also state in the owners manual that operating the engine with the wrong engine configuration at a given altitude may increase its emissions and decrease fuel efficiency and performance. See § 1054.145(c) for special provisions that apply for handheld engines.

(d) *Prohibited controls.* You may not design your engines with emission-control devices, systems, or elements of design that cause or contribute to an unreasonable risk to public health, welfare, or safety while operating. For example, this would apply if the engine emits a noxious or toxic substance it would otherwise not emit that contributes to such an unreasonable risk.

(e) *Defeat devices.* You may not equip your engines with a defeat device. A defeat device is an auxiliary emission control device that reduces the effectiveness of emission controls under conditions that the engine may reasonably be expected to encounter during normal operation and use. This does not apply for altitude kits installed or removed consistent with § 1054.655. This also does not apply to auxiliary emission control devices you identify in your application for certification if any of the following is true:

(1) The conditions of concern were substantially included in the applicable duty-cycle test procedures described in subpart F of this part.

(2) You show your design is necessary to prevent engine (or equipment) damage or accidents.

(3) The reduced effectiveness applies only to starting the engine.

§ 1054.120 What emission-related warranty requirements apply to me?

The requirements of this section apply to the manufacturer certifying with respect to exhaust emissions. See 40 CFR part 1060 for the warranty requirements related to evaporative emissions.

(a) *General requirements.* You must warrant to the ultimate purchaser and each subsequent purchaser that the new engine, including all parts of its emission control system, meets two conditions:

(1) It is designed, built, and equipped so it conforms at the time of sale to the ultimate purchaser with the requirements of this part.

(2) It is free from defects in materials and workmanship that may keep it from meeting these requirements.

(b) *Warranty period.* Your emission-related warranty must be valid during the periods specified in this paragraph (b). You may offer an emission-related warranty more generous than we require. The emission-related warranty for the engine may not be shorter than any published warranty you offer without charge for the engine. Similarly, the emission-related warranty for any component may not be shorter than any published warranty you offer without charge for that component. If an engine has no hour meter, we base the warranty periods in this paragraph (b) only on the engine's age (in years). The warranty period begins on the date of sale to the ultimate purchaser. The minimum warranty periods are as follows:

(1) The minimum warranty period is two years except as allowed under paragraph (b)(2) or (3) of this section.

(2) We may establish a shorter warranty period for handheld engines subject to severe service in seasonal equipment if we determine that these engines are likely to operate for a number of hours greater than the applicable useful life within 24 months. You must request this shorter warranty period in your application for certification or in an earlier submission.

(3) For engines equipped with hour meters, you may deny warranty claims for engines that have accumulated a number of hours greater than 50 percent of the applicable useful life.

(c) *Components covered.* The emission-related warranty covers all components whose failure would increase an engine's emissions of any regulated pollutant, including components listed in 40 CFR part 1068, Appendix I, and components from any other system you develop to control emissions. The emission-related warranty covers these components even if another company produces the component. Your emission-related warranty does not cover components whose failure would not

increase an engine's emissions of any regulated pollutant.

(d) *Limited applicability*. You may deny warranty claims under this section if the operator caused the problem through improper maintenance or use, as described in 40 CFR 1068.115.

(e) *Owners manual*. Describe in the owners manual the emission-related warranty provisions from this section that apply to the engine. Include instructions for obtaining warranty service consistent with the requirements of paragraph (f) of this section.

(f) *Requirements related to warranty claims*. You are required at a minimum to meet the following conditions to ensure that owners will be able to promptly obtain warranty repairs:

(1) You must provide and monitor a toll-free telephone number and an e-mail address for owners to receive information about how to make a warranty claim, and how to make arrangements for authorized repairs.

(2) You must provide a source of replacement parts within the United States. For parts that you import, this requires you to have at least one distributor within the United States.

(3) You must use one of the following methods to show that you will generally be able to honor warranty claims:

(i) If you have authorized service centers in all U.S. population centers with a population of 100,000 or more based on the 2000 census, you may limit warranty repairs to these service providers.

(ii) You may limit warranty repairs to authorized service centers for owners located within 100 miles of an authorized service center. For owners located more than 100 miles from an authorized service center, you must state in your warranty that you will either pay for shipping costs to and from an authorized service center, provide for a service technician to come to the owner to make the warranty repair, or pay for the repair to be made at a local nonauthorized service center. The provisions of this paragraph (f)(3)(ii) apply only for the contiguous states, excluding the states with high-altitude areas identified in 40 CFR part 1068, Appendix III.

(iii) You may use the approach described in paragraphs (f)(3)(i) of this section for some states and the approach described in paragraph (f)(3)(ii) of this section for other states. However, you must have at least one authorized service center in each state unless the whole state is within 100 miles of authorized service centers in other states.

(4) If your plan for meeting the requirements of this paragraph (f) does not include at least 100 authorized repair facilities in the United States or at least one such facility for each 5,000 engines you sell in the United States, you must also post a bond as described in § 1054.690 to ensure that you will fulfill your warranty-repair responsibilities even if you are not obligated to post a bond under that section. Note that you may post a single bond to meet the requirements of this section and § 1054.690.

§ 1054.125 What maintenance instructions must I give to buyers?

Give the ultimate purchaser of each new engine written instructions for properly maintaining and using the engine, including the emission control system as described in this section. The maintenance instructions also apply to service accumulation on your emission-data engines as described in § 1054.245 and in 40 CFR part 1065. Note that for handheld engines subject to Phase 3 standards you may perform maintenance on emission-data engines during service accumulation as described in 40 CFR part 90.

(a) *Critical emission-related maintenance*. Critical emission-related maintenance includes any adjustment, cleaning, repair, or replacement of critical emission-related components. This may also include additional emission-related maintenance that you determine is critical if we approve it in advance. You may schedule critical emission-related maintenance on these components if you meet the following conditions:

(1) You demonstrate that the maintenance is reasonably likely to be done at the recommended intervals on in-use engines. We will accept scheduled maintenance as reasonably likely to

occur if you satisfy any of the following conditions:

(i) You present data showing that any lack of maintenance that increases emissions also unacceptably degrades the engine's performance.

(ii) You present survey data showing that at least 80 percent of engines in the field get the maintenance you specify at the recommended intervals. If the survey data show that 60 to 80 percent of engines in the field get the maintenance you specify at the recommended intervals, you may ask us to consider additional factors such as the effect on performance and emissions. For example, we may allow you to schedule fuel-injector replacement as critical emission-related maintenance if you have survey data showing this is done at the recommended interval for 65 percent of engines and you demonstrate that performance degradation is roughly proportional to the degradation in emission control for engines that do not have their fuel injectors replaced.

(iii) You provide the maintenance free of charge and clearly say so in your maintenance instructions.

(iv) You otherwise show us that the maintenance is reasonably likely to be done at the recommended intervals.

(2) You may schedule cleaning or changing air filters or changing spark plugs at the least frequent interval described in the owners manual. See § 1054.245 for testing requirements related to these maintenance steps.

(3) You may not schedule critical emission-related maintenance within the useful life period for aftertreatment devices, pulse-air valves, fuel injectors, oxygen sensors, electronic control units, superchargers, or turbochargers, except as specified in paragraph (b) or (c) of this section.

(4) You may ask us to approve a maintenance interval shorter than that specified in paragraph (a)(3) of this section. In your request you must describe the proposed maintenance step, recommend the maximum feasible interval for this maintenance, include your rationale with supporting evidence to support the need for the maintenance at the recommended interval, and demonstrate that the maintenance will be done at the recommended interval on in-use engines. In considering your request, we will evaluate the information you provide and any other available information to establish alternate specifications for maintenance intervals, if appropriate.

(b) *Recommended additional maintenance.* You may recommend any additional amount of maintenance on the components listed in paragraph (a) of this section, as long as you state clearly that these maintenance steps are not necessary to keep the emission-related warranty valid. If operators do the maintenance specified in paragraph (a) of this section, but not the recommended additional maintenance, this does not allow you to disqualify those engines from in-use testing or deny a warranty claim. Do not take these maintenance steps during service accumulation on your emission-data engines.

(c) *Special maintenance.* You may specify more frequent maintenance to address problems related to special situations, such as atypical engine operation. You must clearly state that this additional maintenance is associated with the special situation you are addressing. We may disapprove your maintenance instructions if we determine that you have specified special maintenance steps to address engine operation that is not atypical, or that the maintenance is unlikely to occur in use. If we determine that certain maintenance items do not qualify as special maintenance under this paragraph (c), you may identify this as recommended additional maintenance under paragraph (b) of this section.

(d) *Noncritical emission-related maintenance.* Subject to the provisions of this paragraph (d), you may schedule any amount of emission-related inspection or maintenance that is not covered by paragraph (a) of this section (i.e., maintenance that is neither explicitly identified as critical emission-related maintenance, nor that we approve as critical emission-related maintenance). Noncritical emission-related maintenance generally includes re-seating valves, removing combustion chamber deposits, or any other emission-related maintenance on the components we specify in 40 CFR part 1068, Appendix I that is not covered in paragraph (a) of

this section. You must state in the owners manual that these steps are not necessary to keep the emission-related warranty valid. If operators fail to do this maintenance, this does not allow you to disqualify those engines from in-use testing or deny a warranty claim. Do not take these inspection or maintenance steps during service accumulation on your emission-data engines.

(e) *Maintenance that is not emission-related.* For maintenance unrelated to emission controls, you may schedule any amount of inspection or maintenance. You may also take these inspection or maintenance steps during service accumulation on your emission-data engines, as long as they are reasonable and technologically necessary. This might include adding engine oil, changing fuel or oil filters, servicing engine-cooling systems, and adjusting idle speed, governor, engine bolt torque, valve lash, or injector lash. You may perform this nonemission-related maintenance on emission-data engines at the least frequent intervals that you recommend to the ultimate purchaser (but not the intervals recommended for severe service).

(f) *Source of parts and repairs.* State clearly on the first page of your written maintenance instructions that a repair shop or person of the owner's choosing may maintain, replace, or repair emission control devices and systems. Your instructions may not require components or service identified by brand, trade, or corporate name. Also, do not directly or indirectly condition your warranty on a requirement that the engine be serviced by your franchised dealers or any other service establishments with which you have a commercial relationship. You may disregard the requirements in this paragraph (f) if you do one of two things:

(1) Provide a component or service without charge under the purchase agreement.

(2) Get us to waive this prohibition in the public's interest by convincing us the engine will work properly only with the identified component or service.

(g) *Payment for scheduled maintenance.* Owners are responsible for properly maintaining their engines. This generally includes paying for scheduled maintenance. However, manufacturers must pay for scheduled maintenance during the useful life if it meets all the following criteria:

(1) Each affected component was not in general use on similar engines before 1997.

(2) The primary function of each affected component is to reduce emissions.

(3) Failure to perform the maintenance would not cause clear problems that would significantly degrade the engine's performance.

(h) *Owners manual.* Explain the owner's responsibility for proper maintenance in the owners manual.

[73 FR 59259, Oct. 8, 2008, as amended at 75 FR 23024, Apr. 30, 2010]

§ 1054.130 What installation instructions must I give to equipment manufacturers?

(a) If you sell an engine for someone else to install in a piece of equipment, give the engine installer instructions for installing it consistent with the requirements of this part. Include all information necessary to ensure that an engine will be installed in its certified configuration.

(b) Make sure the instructions have the following information:

(1) Include the heading: ''Emission-related installation instructions''.

(2) State: ''Failing to follow these instructions when installing a certified engine in nonroad equipment violates federal law (40 CFR 1068.105(b)), subject to fines or other penalties as described in the Clean Air Act.''

(3) Describe the instructions needed to properly install the exhaust system and any other components. Include instructions consistent with the requirements of § 1054.655 related to altitude kits.

(4) Describe the steps needed to control evaporative emissions in accordance with certificates of conformity that you hold. Include instructions for connecting fuel lines as needed to prevent running loss emissions, if applicable. Such instructions must include sufficient detail to ensure that running loss control will not cause the engine to exceed exhaust emission standards.

For example, you may specify a maximum vapor flow rate under normal operating conditions. Also include notification that the installer must meet the requirements of § 1054.112 and 40 CFR part 1060.

(5) Describe any limits on the range of applications needed to ensure that the engine remains in its certified configuration after installation. For example, if you certify engines only for rated-speed applications tell equipment manufacturers that the engine must not be installed in equipment involving intermediate-speed operation. Also, if your wintertime engines are not certified to the otherwise applicable $HC+NO_X$ standards, tell equipment manufacturers that the engines must be installed in equipment that is used only in wintertime.

(6) Describe any other instructions to make sure the installed engine will operate according to design specifications in your application for certification. For example, this may include specified limits for catalyst systems, such as exhaust backpressure, catalyst location, and temperature profiles during engine operation.

(7) State: ''If you install the engine in a way that makes the engine's emission control information label hard to read during normal engine maintenance, you must place a duplicate label on the equipment, as described in 40 CFR 1068.105.''

(c) You do not need installation instructions for engines you install in your own equipment.

(d) Provide instructions in writing or in an equivalent format. For example, you may post instructions on a publicly available Web site for downloading or printing. If you do not provide the instructions in writing, explain in your application for certification how you will ensure that each installer is informed of the installation requirements.

§ 1054.135 How must I label and identify the engines I produce?

The provisions of this section apply to engine manufacturers.

(a) Assign each engine a unique identification number and permanently affix, engrave, or stamp it on the engine in a legible way.

(b) At the time of manufacture, affix a permanent and legible label identifying each engine. The label must be—

(1) Attached in one piece so it is not removable without being destroyed or defaced.

(2) Secured to a part of the engine needed for normal operation and not normally requiring replacement.

(3) Durable and readable for the engine's entire life.

(4) Written in English.

(c) The label must conform to the following specifications without exception:

(1) Include the heading ''EMISSION CONTROL INFORMATION''.

(2) Include your full corporate name and trademark. You may identify another company and use its trademark instead of yours if you comply with the provisions of § 1054.640.

(3) Include EPA's standardized designation for the emission family (and subfamily, where applicable).

(4) State the following based on the useful life requirements in § 1054.107: ''EMISSION COMPLIANCE PERIOD = [identify applicable useful life period] HOURS''. In addition to specifying the hours, you may optionally add the descriptive terms specified in § 1054.107(a) to characterize the useful life. You may use the term Heavy Commercial for nonhandheld engines if you establish a longer useful life under § 1054.107(a)(2).

(5) State the engine's displacement (in cubic centimeters); however, you may omit this from the label if all the engines in the emission family have the same per-cylinder displacement and total displacement.

(6) State the date of manufacture [DAY (optional), MONTH, and YEAR]; however, you may omit this from the label if you stamp, engrave, or otherwise permanently identify it elsewhere on the engine, in which case you must also describe in your application for certification where you will identify the date on the engine.

(7) Identify the emission control system. Use terms and abbreviations as described in 40 CFR 1068.45. You may omit this information from the label if there is not enough room for it and you put it in the owners manual instead.

(8) Include one of the following statements:

(i) If you certify the engine only with respect to exhaust emissions, state—

''THIS ENGINE MEETS U.S. EPA EXH REGS FOR [MODEL YEAR].''

(ii) If you certify the engine with respect to exhaust emissions and the equipment with respect to evaporative emissions, state—

''THIS ENGINE MEETS U.S. EPA EXH/EVP REGS FOR [MODEL YEAR].''

(d) The following information may be included on the label or in the owners manual:

(1) List specifications and adjustments for engine tuneups.

(2) Identify the altitude at which an altitude kit should be installed if you specify an altitude kit under § 1054.115(c).

(3) Identify the fuel type and any requirements for fuel and lubricants.

(4) If your nonhandheld engines are certified for use only at rated speed or only at intermediate speed, add the statement: ''CERTIFIED FOR [rated-speed or intermediate-speed] APPLICATIONS ONLY'' or ''CERTIFIED FOR [identify nominal engine speed or range of speeds for testing] OPERATION ONLY''.

(e) You may add information to the emission control information label as follows:

(1) You may identify other emission standards that the engine meets or does not meet (such as California standards). You may include this information by adding it to the statement we specify or by including a separate statement.

(2) You may add other information to ensure that the engine will be properly maintained and used.

(3) You may add appropriate features to prevent counterfeit labels. For example, you may include the engine's unique identification number on the label.

(f) Except for the labeling requirements specified in paragraph (c) of this section, you may ask us to approve modified labeling requirements in this part 1054 if you show that it is necessary or appropriate. We will approve your request if your alternate label is consistent with the requirements of this part.

(g) If others install your engine in their equipment in a way that obscures the engine label such that the label cannot be read during normal maintenance, we require them to add a duplicate label on the equipment (see 40 CFR 1068.105). If equipment manufacturers request it, send them labels that include all the information from the original label and that are clearly identified as duplicate labels. You may omit the date of manufacture from the duplicate label. Keep a written record of each request for five years after it is no longer needed for ongoing production.

(h) Integrated equipment manufacturers certifying their engines and equipment with respect to both exhaust and evaporative emission standards may meet labeling requirements with a single label that has all the required information specified in this section and in 40 CFR 1060.135.

§ 1054.140 What is my engine's maximum engine power and displacement?

This section describes how to quantify your engine's maximum engine power and displacement for the purposes of this part.

(a) An engine configuration's maximum engine power is the maximum brake power point on the nominal power curve for the engine configuration, as defined in this section. Round the power value to the nearest 0.1 kilowatts for nonhandheld engines and to the nearest 0.01 kilowatts for handheld engines. The nominal power curve of an engine configuration is the relationship between maximum available engine brake power and engine speed for an engine, using the mapping procedures of 40 CFR part 1065, based on the manufacturer's design and production specifications for the engine. For handheld engines, we may allow manufacturers to base the nominal power curve on other mapping procedures, consistent with good engineering judgment. This information may also be expressed by a torque curve that relates maximum available engine torque with

engine speed. Note that maximum engine power is based on engines and installed engine governors; equipment designs that further limit engine operation do not change maximum engine power.

(b) An engine configuration's displacement is the intended swept volume of all the engine's cylinders. The swept volume of the engine is the product of the internal cross-section area of the cylinders, the stroke length, and the number of cylinders. Calculate the engine's intended swept volume from the design specifications for the cylinders using enough significant figures to allow determination of the displacement to the nearest 0.1 cc. Determine the final value by rounding to the nearest cubic centimeter. For example, for a one-cylinder engine with circular cylinders having an internal diameter of 6.00 cm and a 6.25 cm stroke length, the rounded displacement would be: $(1) \times (6.00/2)^2 \times (\pi) \times (6.25) = 177$ cc.

(c) The nominal power curve and intended swept volume must be within the range of the actual power curves and swept volumes of production engines considering normal production variability. If after production begins it is determined that either your nominal power curve or your intended swept volume does not represent production engines, we may require you to amend your application for certification under § 1054.225.

§ 1054.145 Are there interim provisions that apply only for a limited time?

The provisions in this section apply instead of other provisions in this part. This section describes how and when these interim provisions apply.

(a) *Delayed Phase 3 implementation for engine manufacturers.* Small-volume engine manufacturers may delay complying with the Phase 3 exhaust emission standards and requirements that would otherwise apply, subject to the following conditions:

(1) You may delay meeting the Phase 3 exhaust emission standards until 2013 for Class II engines and until 2014 for Class I engines. The running loss standards in § 1054.112 also do not apply to engines exempted under this paragraph (a), or to equipment using these engines.

(2) You must certify your engines exempted under this section to the Phase 2 standards and requirements specified in 40 CFR 90.103 and summarized in Appendix I of this part. You must meet the labeling requirements in 40 CFR 90.114, but use the following compliance statement instead of the compliance statement in 40 CFR 90.114(c)(7): ''THIS ENGINE COMPLIES WITH U.S. EPA REGULATIONS FOR [CURRENT MODEL YEAR] NONROAD ENGINES UNDER 40 CFR 1054.145(a).''

(3) After the delays indicated in paragraph (a)(1) of this section, you must comply with the same standards and requirements as all other manufacturers except as noted elsewhere in this section.

(4) The provisions of this paragraph (a) may not be used to circumvent the requirements of this part.

(5) You may continue to generate early credits during this two-year period as described under § 1054.740 as if the Phase 3 emission standards applied starting in the 2013 model year for Class II engines and in the 2014 model year for Class I engines.

(b) *Delayed Phase 3 implementation for equipment manufacturers.* The provisions of § 1054.625 describe how manufacturers may produce certain numbers of equipment using Class II engines that meet Phase 2 standards during the first four years that the Phase 3 standards apply.

(c) *Special provisions for handheld engines.* The following provisions apply for handheld engines:

(1) You may use the provisions in 40 CFR 90.104(g) to rely on assigned deterioration factors for small-volume engine manufacturers and for small-volume engine families.

(2) You may perform maintenance on emission-data engines during service accumulation as described in 40 CFR part 90. If your scheduled emission-related maintenance falls within 10 hours of a test point, delay the maintenance until the engine reaches the test point. Measure emissions before and after peforming the maintenance. Use the average values from these two measurements to calculate deterioration factors. The emission-data engine must

meet applicable emission standards before and after maintenance to be considered in compliance, as described in § 1054.240(a) and (b).

(3) Engines subject to Phase 3 emission standards must meet the standards at or above barometric pressures of 96.0 kPa in the standard configuration and are not required to meet emission standards at lower barometric pressures. This is intended to allow testing under most weather conditions at all altitudes up to 1,100 feet above sea level. In your application for certification, identify the altitude above which you rely on an altitude kit to meet emission standards and describe your plan for making information and parts available such that you would reasonably expect that altitude kits would be widely used at all such altitudes.

(d) *Alignment of model years for exhaust and evaporative standards.* Evaporative emission standards generally apply based on the model year of the equipment, which is determined by the equipment's date of final assembly. However, in the first year of new emission standards, equipment manufacturers may apply evaporative emission standards based on the model year of the engine as shown on the engine's emission control information label. For example, for the fuel line permeation standards starting in 2012, equipment manufacturers may order a batch of 2011 model year engines for installation in 2012 model year equipment, subject to the anti-stockpiling provisions of 40 CFR 1068.105(a). The equipment with the 2011 model year engines would not need to meet fuel line permeation standards, as long as the equipment is fully assembled by December 31, 2012.

(e) *Early compliance with evaporative emission standards—nonhandheld equipment manufacturers.* You may produce nonhandheld equipment that does not meet the otherwise applicable evaporative emission standards without violating the prohibition in 40 CFR 1068.101(a)(1) if you earn evaporative emission allowances, as follows:

(1) You may earn an evaporative emission allowance from each piece of equipment certified to California's evaporative emission standards by producing it before the requirements of this part start to apply and selling it outside of California. You may use an evaporative emission allowance by selling one piece of equipment that does not meet any EPA evaporative emission standards even though it is subject to the EPA standards. The early-compliant equipment must be covered by an EPA certificate of conformity (see 40 CFR 1060.105(e)).

(2) You may earn an evaporative emission allowance with respect to fuel tank permeation from each piece of equipment certified to EPA's evaporative emission standards by selling it outside of California or in an application that is preempted from California's standards before EPA's fuel tank permeation standards start to apply. The early-compliant fuel tanks must be covered by an EPA certificate of conformity, though you may demonstrate compliance based on the specifications and procedures adopted by the California Air Resources Board. You may use an evaporative emission allowance by selling one piece of equipment with a fuel tank that does not meet the EPA emission standards that would otherwise apply. For example, you can earn an evaporative emission allowance by selling a low-permeation fuel tank for Class II equipment before the 2011 model year, in which case you could sell a piece of Class II equipment in 2011 with a high-permeation fuel tank. You may not generate allowances under this paragraph (e)(2) based on your sales of metal fuel tanks.

(3) Evaporative emission allowances you earn under this paragraph (e) from equipment with Class I engines may be used only for other equipment with Class I engines. Similarly, evaporative emission allowances you earn under this paragraph (e) from equipment with Class II engines may be used only for other equipment with Class II engines.

(4) You must label any equipment using allowances under this paragraph (e) with the following statement: ''EXEMPT FROM EVAPORATIVE STANDARDS UNDER 40 CFR 1054.145(e)''.

(5) You may not use the allowances you generate under this paragraph (e) for 2014 and later model year equipment with Class II engines or for 2015 and later model year equipment with Class I engines.

(6) Send the Designated Compliance Officer the following information for each year in which you use the provisions of this paragraph (e):

(i) Send us a report within 45 days after the end of the model year describing how many pieces of equipment you produced in the preceding model year that generate allowances. You may combine this with the reports specified in §1054.250(a) if applicable.

(ii) Describe the number of equipment using allowances under this paragraph (e) in your end-of-year reports and final reports after the end of the model year as described in §1054.730(a). If you do not participate in the averaging, banking, and trading program, send this information separately within 90 days after the end of the model year.

(f) *Early banking for evaporative emission standards—handheld equipment manufacturers.* You may earn emission credits for handheld equipment you produce before the evaporative emission standards of §1054.110 apply. To do this, your equipment must use fuel tanks with a family emission limit below 1.5 g/m^2/day (or 2.5 g/m^2/day for testing at 40 °C). Calculate your credits as described in §1054.706 based on the difference between the family emission limit and 1.5 g/m^2/day (or 2.5 g/m^2/day for testing at 40 °C).

(g) *Useful life for evaporative emission standards.* (1) A useful life period of two years applies for fuel tanks or fuel caps certified to meet permeation emission standards in 2013 and earlier model years. However, for fuel tanks with a family emission limit above or below the specified emission standard, calculate emission credits under §1054.706 based on a useful life of five years.

(2) A useful life period of two years applies for cold-weather fuel lines certified to meet permeation emission standards in 2012 and 2013. However, for fuel lines with a family emission limit above or below the specified emission standard, calculate emission credits under §1054.706 based on a useful life of five years.

(h) *Emission credit program for cold-weather fuel lines.* In the 2012 through 2015 model years, certifying equipment manufacturers may generate or use emission credits for averaging to show compliance with the permeation standards for cold-weather fuel lines, but not for banking or trading, as follows:

(1) To generate or use emission credits, apply the provisions of subpart H of this part as they apply for fuel tanks except as specified in this paragraph (h). For example, calculate emission credits based on the internal surface area of the fuel lines and a five-year useful life, even if the standards apply temporarily over a shorter useful life.

(2) Establish an FEL for each emission family based on emission measurements as specified in 40 CFR 1060.515. The FEL may not exceed 400 g/m^2/day for any emission family.

(3) Use an adjustment factor (AF) of 1.0 for calculating credits.

(4) Cold-weather fuel lines are in a separate averaging set, which means you may not exchange emission credits between fuel tanks and fuel lines.

(i) *Use of California data for handheld fuel tank permeation.* If you certified handheld fuel tanks to the permeation standards in 40 CFR 90.129 based on emission measurements for demonstrating compliance with emission standards for California, you may continue to comply with the provisions of 40 CFR 90.129 instead of the provisions of §1054.110(b) for the 2010 and 2011 model years, provided that we allow you to use carryover emission data under 40 CFR 1060.235(e) for your emission family.

(j) *Continued use of 40 CFR part 90 test procedures.* You may use the test procedures for measuring exhaust emissions in 40 CFR part 90 instead of those in subpart F of this part for 2010 through 2012 model years. This applies for certification, production-line, and in-use testing. You may continue to use data based on the test procedures in 40 CFR part 90 for engine families in 2013 and later model years, provided that we allow you to use carryover emission data under 40 CFR 1054.235(d) for your emission family. You may also use the test procedures for measuring exhaust emissions in 40 CFR part 90 for production-line testing with any engine family whose certification is based on testing with those procedures.

(k) *Carryover of exhaust emission data from Californa ARB procedures.* You may certify your engines through the 2012

model year based on exhaust emission data you previously submitted to California ARB. This applies for certification and production-line testing. This paragraph (k) no longer applies starting with the 2013 model year. Note that other regulatory provisions may allow you to use data from California ARB for EPA certification in certain circumstances.

(l) [Reserved]

(m) *Delayed compliance for rotation-molded fuel tanks.* (1) You may produce limited numbers of 2011 and 2012 model year equipment with rotation-molded fuel tanks that do not meet permeation emission standards specified in §1054.112(b) and 40 CFR 1060.103, subject to the following provisions:

(i) You may use allowances under this paragraph (m) only for Class II equipment models using identical fuel tanks such that the production volumes of the fuel tank design used in such equipment is no more than 5,000 units in the 2011 and 2012 model years, with a total corporate allowance of 10,000 units in 2012. If production volumes are greater than 5,000 for a given fuel tank design (or greater than 10,000 corporate-wide in the 2012 model year), all those tanks must comply with emission standards. Tanks are generally considered identical if they are produced under a single part number to conform to a single design or blueprint. Tanks should be considered identical if they differ only with respect to production variability, post-production changes (such as different fittings or grommets), supplier, color, or other extraneous design variables. The limit of 5,000 units for a given fuel tank design applies together for the total production from any parent or subsidiary companies.

(ii) Include the following statement on the emission label specified in 40 CFR 1060.135: ''EXEMPT FROM TANK PERMEATION STANDARDS UNDER 40 CFR 1054.145''.

(iii) You must keep records to demonstrate that you do not exceed the specified production volumes. Identify the number of exempted equipment you produced from each model and from each production facility.

(iv) You may not apply the provisions of this paragraph (m) for fuel tanks that are not rotation-molded or for equipment that is not powered by a Class II engine.

(2) Fuel tank manufacturers may produce exempted fuel tanks as needed for equipment manufacturers under this paragraph (m) without our prior approval. Fuel tank manufacturers must keep records of the number of exempted fuel tanks sold to each equipment manufacturer.

(3) Equipment you produce under this paragraph (m) are exempt from the prohibitions in 40 CFR 1068.101(a)(1) with respect to fuel tank permeation emissions, subject to the provisions of this paragraph (m). However, producing more exempted equipment than we allow under this paragraph (m) violates the prohibitions in 40 CFR 1068.101(a)(1). Equipment manufacturers and fuel tank manufacturers must keep the records we require under this paragraph (m) until at least December 31, 2016 and give them to us if we ask for them (see 40 CFR 1068.101(a)(2)).

(n) *Ethanol-blended test fuel for nonhandheld engines.* During the first two years of the Phase 3 standards, if you use an ethanol-blended test fuel for certifying a given engine family as described in §1054.501(b)(2), we will also use the blended fuel for testing engines from that engine family, whether or not you use the blended fuel for certifying all your Class I (or Class II) engine families in that model year.

(o) *Interim bonding provisions.* Through 2012, the maximum value of the bond under §1054.690 is $10 million. This maximum value applies without adjustment for inflation.

[73 FR 59259, Oct. 8, 2008, as amended at 75 FR 23025, Apr. 30, 2010]

Subpart C—Certifying Emission Families

§1054.201 What are the general requirements for obtaining a certificate of conformity?

Engine manufacturers must certify their engines with respect to the exhaust emission standards in this part. Manufacturers of engines, equipment, or fuel-system components may need to certify their products with respect to evaporative emission standards as described in 40 CFR 1060.1 and 1060.601.

The following general requirements apply for obtaining a certificate of conformity:

(a) You must send us a separate application for a certificate of conformity for each engine family. A certificate of conformity is valid starting with the indicated effective date but it is not valid for any production after December 31 of the model year for which it is issued. No certificate will be issued after December 31 of the model year. If you certify with respect to both exhaust and evaporative emissions, you must submit separate applications.

(b) The application must contain all the information required by this part and must not include false or incomplete statements or information (see § 1054.255).

(c) We may ask you to include less information than we specify in this subpart as long as you maintain all the information required by § 1054.250.

(d) You must use good engineering judgment for all decisions related to your application (see 40 CFR 1068.5).

(e) An authorized representative of your company must approve and sign the application.

(f) See § 1054.255 for provisions describing how we will process your application.

(g) We may require you to deliver your test engines to a facility we designate for our testing (see § 1054.235(c)).

(h) For engines that become new after being placed into service, such as engines converted to run on a different fuel, we may specify alternate certification provisions consistent with the intent of this part. *See* § 1054.645 and the definition of ''new nonroad engine'' in § 1054.801.

[73 FR 59259, Oct. 8, 2008, as amended at 75 FR 23025, Apr. 30, 2010]

§ 1054.205 What must I include in my application?

This section specifies the information that must be in your application, unless we ask you to include less information under § 1054.201(c). We may require you to provide additional information to evaluate your application. The provisions of this section apply to integrated equipment manufacturers and engine manufacturers selling loose engines. Nonintegrated equipment manufacturers must follow the requirements of 40 CFR part 1060.

(a) Describe the emission family's specifications and other basic parameters of the engine's design and emission controls. List the fuel type on which your engines are designed to operate (for example, all-season gasoline). List each distinguishable engine configuration in the emission family. For each engine configuration in which the maximum modal power of the emission-data engine is at or above 25 kW (or power at or above 15 kW if displacement is above 1000 cc), list the maximum engine power and the range of values for maximum engine power resulting from production tolerances, as described in § 1054.140.

(b) Explain how the emission control systems operate. Describe the evaporative emission controls and show how your design will prevent running loss emissions, if applicable. Also describe in detail all system components for controlling exhaust emissions, including all auxiliary emission control devices (AECDs) and all fuel-system components you will install on any production or test engine. Identify the part number of each component you describe. For this paragraph (b), treat as separate AECDs any devices that modulate or activate differently from each other. Include sufficient detail to allow us to evaluate whether the AECDs are consistent with the defeat device prohibition of § 1054.115. For example, if your engines will routinely experience in-use operation that differs from the specified duty cycle for certification, describe how the fuel-metering system responds to varying speeds and loads not represented by the duty cycle. If you test an emission-data engine by disabling the governor for full-load operation such that the engine operates at an air-fuel ratio significantly different than under full-load operation with an installed governor, explain why these differences are necessary or appropriate. For conventional carbureted engines without electronic fuel controls, it is sufficient to state that there is no significant difference in air-fuel ratios.

(c) [Reserved]

(d) Describe the engines, equipment, and fuel system components you selected for testing and the reasons for selecting them.

(e) Describe the test equipment and procedures that you used, including any special or alternate test procedures you used. For handheld engines, describe how you selected the value for rated speed.

(f) Describe how you operated the emission-data engine before testing, including the duty cycle and the number of engine operating hours used to stabilize emission levels. Explain why you selected the method of service accumulation. Describe any scheduled maintenance you did.

(g) List the specifications of the test fuel to show that it falls within the required ranges we specify in 40 CFR part 1065.

(h) Identify the emission family's useful life. Describe the basis for selecting useful life values with respect to exhaust emissions (see § 1054.107).

(i) Include the maintenance and warranty instructions you will give to the ultimate purchaser of each new engine (see §§ 1054.120 and 1054.125). Describe your basis for meeting the warranty-assurance provisions in § 1054.120(f). Describe your recall repair network if it is different than your warranty repair network. State that you will post a bond as specified in § 1054.120(f) and 1054.690 or describe why those requirements do not apply.

(j) Include the emission-related installation instructions you will provide if someone else installs your engines in nonroad equipment (see § 1054.130).

(k) Describe your emission control information label (see § 1054.135).

(l) Identify the emission standards or FELs for the emission family.

(m) Identify the emission family's deterioration factors and describe how you developed them (see § 1054.245). Present any emission test data you used for this.

(n) State that you operated your emission-data engines as described in the application (including the test procedures, test parameters, and test fuels) to show you meet the requirements of this part.

(o) Present emission data to show that you meet exhaust emission standards, as follows:

(1) Present emission data for hydrocarbons (such as THC, THCE, or NMHC, as applicable), NO_X, and CO on an emission-data engine to show your engines meet the applicable exhaust emission standards as specified in § 1054.101. Show emission figures before and after applying deterioration factors for each engine. Include test data from each applicable duty cycle specified in § 1054.505(b). If we specify more than one grade of any fuel type (for example, low-temperature and all-season gasoline), you need to submit test data only for one grade, unless the regulations of this part specify otherwise for your engine.

(2) Note that §§ 1054.235 and 1054.245 allow you to submit an application in certain cases without new emission data.

(p) Report test results as follows:

(1) Report all test results involving measurement of pollutants for which emission standards apply. Include test results from invalid tests or from any other tests, whether or not they were conducted according to the test procedures of subpart F of this part. We may ask you to send other information to confirm that your tests were valid under the requirements of this part and 40 CFR parts 1060 and 1065.

(2) Report measured CO_2, N_2O, and CH_4 as described in § 1054.235. Small-volume engine manufacturers may omit reporting N_2O and CH_4.

(q) Describe all adjustable operating parameters (see § 1054.115(b)), including production tolerances. Include the following in your description of each parameter:

(1) The nominal or recommended setting.

(2) The intended physically adjustable range.

(3) The limits or stops used to establish adjustable ranges.

(4) Information showing why the limits, stops, or other means of inhibiting adjustment are effective in preventing adjustment of parameters on in-use engines to settings outside your intended physically adjustable ranges.

(r) Describe how your nonhandheld engines comply with emission standards at varying atmospheric pressures. Include a description of altitude kits you design to comply with the requirements of §1054.115(c). Identify the part number of each component you describe. Identify the altitude range for which you expect proper engine performance and emission control with and without the altitude kit. State that your engines will comply with applicable emission standards throughout the useful life with the altitude kit installed according to your instructions. Describe any relevant testing, engineering analysis, or other information in sufficient detail to support your statement. In addition, describe your plan for making information and parts available such that you would reasonably expect that altitude kits would be widely used in the high-altitude counties specified in 40 CFR part 1068, Appendix III. For example, engine owners should have ready access to information describing when an altitude kit is needed and how to obtain this service. Similarly, parts and service information should be available to qualified service facilities in addition to authorized service centers if that is needed for owners to have such altitude kits installed locally.

(s) If your engines are subject to handheld emission standards on the basis of meeting weight limitations described in the definition of ''handheld'' in §1054.801, describe your analysis showing that you meet the applicable weight-related restrictions.

(t) State whether your certification is limited for certain engines. If this is the case, describe how you will prevent use of these engines in applications for which they are not certified. This applies for engines such as the following:

(1) Wintertime engines not certified to the specified $HC+NO_X$ standard.

(2) Two-stroke snowthrower engines using the provisions of §1054.101(d).

(u) Unconditionally certify that all the engines in the emission family comply with the requirements of this part, other referenced parts of the CFR, and the Clean Air Act.

(v) Include good-faith estimates of U.S.-directed production volumes. Include a justification for the estimated production volumes if they are substantially different than actual production volumes in earlier years for similar models. Also indicate whether you expect the engine family to contain only nonroad engines, only stationary engines, or both.

(w) State that you will post a bond as specified in §1054.690 or describe why those requirements do not apply.

(x) Include the information required by other subparts of this part. For example, include the information required by §1054.725 if you participate in the ABT program.

(y) Include other applicable information, such as information specified in this part or 40 CFR part 1068 related to requests for exemptions.

(z) Name an agent for service located in the United States. Service on this agent constitutes service on you or any of your officers or employees for any action by EPA or otherwise by the United States related to the requirements of this part.

(aa) For imported engines or equipment, identify the following:

(1) The port(s) at which you have imported your engines (or equipment containing your engines) over the previous 12 months.

(2) The names and addresses of the agents you have authorized to import your engines or equipment.

(3) The location of a test facility in the United States where you can test your engines if we select them for testing under a selective enforcement audit, as specified in 40 CFR part 1068, subpart E.

[73 FR 59259, Oct. 8, 2008, as amended at 74 FR 56511, Oct. 30, 2009; 75 FR 23025, Apr. 30, 2010]

§1054.210 May I get preliminary approval before I complete my application?

If you send us information before you finish the application, we will review it and make any appropriate determinations, especially for questions related to emission family definitions, auxiliary emission control devices, deterioration factors, useful life, testing for service accumulation, maintenance, and delegated final assembly. Decisions made under this section are considered to be preliminary approval, subject to

final review and approval. We will generally not reverse a decision where we have given you preliminary approval, unless we find new information supporting a different decision. If you request preliminary approval related to the upcoming model year or the model year after that, we will make the appropriate determinations as soon as practicable. We will generally not provide preliminary approval related to a future model year more than two years ahead of time.

§ 1054.220 How do I amend the maintenance instructions in my application?

You may amend your emission-related maintenance instructions after you submit your application for certification as long as the amended instructions remain consistent with the provisions of § 1054.125. You must send the Designated Compliance Officer a written request to amend your application for certification for an engine family if you want to change the emission-related maintenance instructions in a way that could affect emissions. In your request, describe the proposed changes to the maintenance instructions. If operators follow the original maintenance instructions rather than the newly specified maintenance, this does not allow you to disqualify those engines from in-use testing or deny a warranty claim.

(a) If you are decreasing or eliminating any specified maintenance, you may distribute the new maintenance instructions to your customers 30 days after we receive your request, unless we disapprove your request. This would generally include replacing one maintenance step with another. We may approve a shorter time or waive this requirement.

(b) If your requested change would not decrease the specified maintenance, you may distribute the new maintenance instructions anytime after you send your request. For example, this paragraph (b) would cover adding instructions to increase the frequency of filter changes for engines in severe-duty applications.

(c) You need not request approval if you are making only minor corrections (such as correcting typographical mistakes), clarifying your maintenance instructions, or changing instructions for maintenance unrelated to emission control. We may ask you to send us copies of maintenance instructions revised under this paragraph (c).

[73 FR 59259, Oct. 8, 2008, as amended at 75 FR 23025, Apr. 30, 2010]

§ 1054.225 How do I amend my application for certification to include new or modified engines or fuel systems or change an FEL?

Before we issue you a certificate of conformity, you may amend your application to include new or modified engine or fuel-system configurations, subject to the provisions of this section. After we have issued your certificate of conformity, you may send us an amended application requesting that we include new or modified configurations within the scope of the certificate, subject to the provisions of this section. You must amend your application if any changes occur with respect to any information included in your application.

(a) You must amend your application before you take any of the following actions:

(1) Add an engine or fuel-system configuration to an emission family. In this case, the configuration added must be consistent with other configurations in the emission family with respect to the criteria listed in § 1054.230.

(2) Change a configuration already included in an emission family in a way that may affect emissions, or change any of the components you described in your application for certification. This includes production and design changes that may affect emissions any time during the engine's lifetime.

(3) Modify an FEL for an emission family with respect to exhaust emissions as described in paragraph (f) of this section.

(b) To amend your application for certification, send the Designated Compliance Officer the following information:

(1) Describe in detail the addition or change in the model or configuration you intend to make.

(2) Include engineering evaluations or data showing that the amended emission family complies with all applicable requirements. You may do this by showing that the original emission-data engine or emission-data equipment is still appropriate for showing that the amended family complies with all applicable requirements.

(3) If the original emission-data engine for the engine family is not appropriate to show compliance for the new or modified engine configuration, include new test data showing that the new or modified engine configuration meets the requirements of this part.

(c) We may ask for more test data or engineering evaluations. You must give us these within 30 days after we request them.

(d) For emission families already covered by a certificate of conformity, we will determine whether the existing certificate of conformity covers your new or modified configuration. You may ask for a hearing if we deny your request (see § 1054.820).

(e) For emission families already covered by a certificate of conformity, you may start producing the new or modified configuration anytime after you send us your amended application and before we make a decision under paragraph (d) of this section. However, if we determine that the affected configurations do not meet applicable requirements, we will notify you to cease production of the configurations and may require you to recall the engine or equipment at no expense to the owner. Choosing to produce engines under this paragraph (e) is deemed to be consent to recall all engines or equipment that we determine do not meet applicable emission standards or other requirements and to remedy the nonconformity at no expense to the owner. If you do not provide information required under paragraph (c) of this section within 30 days after we request it, you must stop producing the new or modified engine or equipment.

(f) You may ask us to approve a change to your FEL with respect to exhaust emissions in certain cases after the start of production. The changed FEL may not apply to engines you have already introduced into U.S. commerce, except as described in this paragraph (f). If we approve a changed FEL after the start of production, you must identify the date or serial number for applying the new FEL. If you identify this by month and year, we will consider that a lowered FEL applies on the last day of the month and a raised FEL applies on the first day of the month. You may ask us to approve a change to your FEL in the following cases:

(1) You may ask to raise your FEL for your emission family at any time. In your request, you must show that you will still be able to meet the emission standards as specified in subparts B and H of this part. If you amend your application by submitting new test data to include a newly added or modified engine, as described in paragraph (b)(3) of this section, use the appropriate FELs with corresponding production volumes to calculate emission credits for the model year, as described in subpart H of this part. In all other circumstances, you must use the higher FEL for the entire family to calculate emission credits under subpart H of this part.

(2) You may ask to lower the FEL for your emission family only if you have test data from production engines showing that emissions are below the proposed lower FEL. The lower FEL does not apply to engines you produce before the new FEL starts to apply, as specified in this paragraph (f). Use the appropriate FELs with corresponding production volumes to calculate emission credits for the model year, as described in subpart H of this part.

§ 1054.230 How do I select emission families?

(a) For purposes of certification, divide your product line into families of engines that are expected to have similar emission characteristics throughout their useful life as described in this section. Your emission family is limited to a single model year. For evaporative emissions, group engines into emission families as described in 40 CFR 1060.230.

(b) Group engines into the same emission family for exhaust emissions if they are the same in all the following aspects:

(1) The combustion cycle and fuel. See paragraph (g) of this section for

special provisions that apply for dual-fuel engines.

(2) The cooling system (liquid-cooled vs. air-cooled).

(3) Valve configuration (for example, side-valve vs. overhead valve).

(4) Method of air aspiration (for example, turbocharged vs. naturally aspirated).

(5) The number, location, volume, and composition of catalytic converters.

(6) The number and arrangement of cylinders (such as in-line or vee configuration) and approximate total displacement.

(7) Engine class, as defined in § 1054.801.

(8) Method of control for engine operation, other than governing (mechanical or electronic).

(9) The numerical level of the applicable emission standards. For example, an engine family may not include engines certified to different family emission limits, though you may change family emission limits without recertifying as specified in § 1054.225.

(10) Useful life.

(c) You may subdivide a group that is identical under paragraph (b) of this section into different emission families if you show the expected emission characteristics are different during the useful life.

(d) You may group engines that are not identical with respect to the things listed in paragraph (b) of this section into the same emission family, as follows:

(1) In unusual circumstances, you may group such engines into the same emission family if you show that their emission characteristics during the useful life will be similar.

(2) If you are a small-volume engine manufacturer, you may group any nonhandheld engines with the same useful life that are subject to the same emission standards into a single emission family.

(3) The provisions of this paragraph (d) do not exempt any engines from meeting all the applicable standards and requirements in subpart B of this part.

(e) Select test engines from the emission family as described in 40 CFR 1065.401.

(f) You may combine engines from different classes into a single emission family under paragraph (d)(1) of this section if you certify the emission family to the more stringent set of standards from the two classes in that model year.

(g) You may certify dual-fuel or flexible-fuel engines in a single engine family. You may include dedicated-fuel versions of this same engine model in the same engine family, as long as they are identical to the engine configuration with respect to that fuel type for the dual-fuel or flexible-fuel version of the engine. For example, if you produce an engine that can alternately run on gasoline and natural gas, you can include the gasoline-only and natural gas-only versions of the engine in the same engine family as the dual-fuel engine if engine operation on each fuel type is identical with or without installation of components for operating on the other fuel.

[73 FR 59259, Oct. 8, 2008, as amended at 75 FR 23025, Apr. 30, 2010]

§ 1054.235 What exhaust emission testing must I perform for my application for a certificate of conformity?

This section describes the exhaust emission testing you must perform to show compliance with the emission standards in §§ 1054.103 and 1054.105. See §§ 1054.240 and 1054.245 and 40 CFR part 1065, subpart E, regarding service accumulation before emission testing.

(a) Select an emission-data engine from each engine family for testing as described in 40 CFR 1065.401. Select a configuration that is most likely to exceed the $HC+NO_X$ standard, using good engineering judgment. Configurations must be tested as they will be produced, including installed governors, if applicable.

(b) Test your emission-data engines using the procedures and equipment specified in subpart F of this part. In the case of dual-fuel engines, measure emissions when operating with each type of fuel for which you intend to certify the engine. In the case of flexible-fuel engines, measure emissions when operating with the fuel mixture that is most likely to cause the engine to exceed the applicable $HC+NO_X$ emission standard, though you may ask us

to exclude fuel mixtures that you can show are not likely to occur in use.

(c) We may measure emissions from any of your emission-data engines or other engines from the emission family, as follows:

(1) We may decide to do the testing at your plant or any other facility. If we do this, you must deliver the engine to a test facility we designate. The engine you provide must include appropriate manifolds, aftertreatment devices, electronic control units, and other emission-related components not normally attached directly to the engine block. If we do the testing at your plant, you must schedule it as soon as possible and make available the instruments, personnel, and equipment we need.

(2) If we measure emissions on one of your engines, the results of that testing become the official emission results for the engine.

(3) We may set the adjustable parameters of your engine to any point within the physically adjustable ranges (see § 1054.115(b)).

(4) We may calibrate your engine within normal production tolerances for anything we do not consider an adjustable parameter. For example, this would apply where we determine that an engine parameter is not an adjustable parameter (as defined in § 1054.801) but that it is subject to production variability.

(d) You may ask to use carryover emission data from a previous model year instead of doing new tests, but only if all the following are true:

(1) The emission family from the previous model year differs from the current emission family only with respect to model year or other characteristics unrelated to emissions. You may also ask to add a configuration subject to § 1054.225.

(2) The emission-data engine from the previous model year remains the appropriate emission-data engine under paragraph (b) of this section.

(3) The data show that the emission-data engine would meet all the requirements that apply to the emission family covered by the application for certification. For engines originally tested under the provisions of 40 CFR part 90, you may consider those test procedures to be equivalent to the procedures we specify in subpart F of this part.

(e) We may require you to test another engine of the same or different configuration in addition to the engine(s) tested under paragraph (b) of this section.

(f) If you use an alternate test procedure under 40 CFR 1065.10 and later testing shows that such testing does not produce results that are equivalent to the procedures specified in subpart F of this part, we may reject data you generated using the alternate procedure.

(g) Measure CO_2 and CH_4 with each low-hour certification test using the procedures specified in 40 CFR part 1065 starting in the 2011 and 2012 model years, respectively. Also measure N_2O with each low-hour certification test using the procedures specified in 40 CFR part 1065 starting in the 2013 model year for any engine family that depends on NOx aftertreatment to meet emission standards. Small-volume engine manufacturers may omit measurement of N_2O and CH_4. Use the same units and modal calculations as for your other results to report a single weighted value for each constituent. Round the final values as follows:

(1) Round CO_2 to the nearest 1 g/kW-hr.

(2) Round N_2O to the nearest 0.001 g/kW-hr.

(3) Round CH_4 to the nearest 0.001 g/kW-hr.

[73 FR 59259, Oct. 8, 2008, as amended at 74 FR 56511, Oct. 30, 2009]

§ 1054.240 How do I demonstrate that my emission family complies with exhaust emission standards?

(a) For purposes of certification, your emission family is considered in compliance with the emission standards in § 1054.101(a) if all emission-data engines representing that family have test results showing deteriorated emission levels at or below these standards. This includes all test points over the course of the durability demonstration. Note that your FELs are considered to be the applicable emission standards with which you must comply if you participate in the ABT program in subpart H of this part.

(b) Your engine family is deemed not to comply if any emission-data engine representing that family has test results showing a deteriorated emission level for any pollutant that is above an applicable emission standard. This includes all test points over the course of the durability demonstration.

(c) Determine a deterioration factor to compare emission levels from the emission-data engine with the applicable emission standards. Section 1054.245 specifies how to test engines to develop deterioration factors that represent the expected deterioration in emissions over your engines' full useful life. Calculate a multiplicative deterioration factor as described in §1054.245(b). If the deterioration factor is less than one, use one. Specify the deterioration factor to one more significant figure than the emission standard. You may use assigned deterioration factors that we establish for up to 10,000 nonhandheld engines from small-volume emission families in each model year, except that small-volume engine manufacturers may use assigned deterioration factors for any or all of their engine families.

(d) Adjust the official emission results for each tested engine at the low-hour test point by multiplying the measured emissions by the deterioration factor, then rounding the adjusted figure to the same number of decimal places as the emission standard. Compare the rounded emission levels to the emission standard for each emission-data engine. In the case of $HC+NO_x$ standards, add the official emission results and apply the deterioration factor to the sum of the pollutants before rounding. However, if your deterioration factors are based on emission measurements that do not cover the engine's full useful life, apply deterioration factors to each pollutant and then add the results before rounding.

(e) The provisions of this paragraph (e) apply only for engine families with a useful life at or below 300 hours. To apply the deterioration factor to engines other than the original emission-data engine, they must be operated for the same number of hours before starting emission measurements that you used for the original emission-data engine, within one hour. For example, if the original emission-data engine operated for 8 hours before the low-hour emission test, operate the other test engines for 7 to 9 hours before starting emission measurements.

§1054.245 How do I determine deterioration factors from exhaust durability testing?

This section describes how to determine deterioration factors, either with pre-existing test data or with new emission measurements.

(a) You may ask us to approve deterioration factors for an emission family based on emission measurements from similar engines if you have already given us these data for certifying other engines in the same or earlier model years. Use good engineering judgment to decide whether the two engines are similar.

(b) If you are unable to determine deterioration factors for an emission family under paragraph (a) of this section, select engines, subsystems, or components for testing. Determine deterioration factors based on service accumulation and related testing. Include consideration of wear and other causes of deterioration expected under typical consumer use. Determine deterioration factors as follows:

(1) Measure emissions from the emission-data engine at a low-hour test point, at the midpoint of the useful life, and at the end of the useful life, except as specifically allowed by this paragraph (b). You may test at additional evenly spaced intermediate points. Collect emission data using measurements to one more decimal place than the emission standard.

(2) Operate the engine over a representative duty cycle for a period at least as long as the useful life (in hours). You may operate the engine continuously. You may also use an engine installed in nonroad equipment to accumulate service hours instead of running the engine only in the laboratory.

(3) In the case of dual-fuel or flexible-fuel engines, you may accumulate service hours on a single emission-data engine using the type or mixture of fuel expected to have the highest combustion and exhaust temperatures. For dual-fuel engines, you must measure

emissions on each fuel type at each test point.

(4) You may perform maintenance on emission-data engines as described in §1054.125 and 40 CFR part 1065, subpart E. If you change one or more spark plugs on an emission-data engine as allowed under §1054.125, you must measure emissions before and after this maintenance. If you clean or change an air filter on an emission-data engine as allowed under §1054.125, you must measure emissions before and after every second time you perform this maintenance. Use the average values from these two measurements to calculate deterioration factors. The emission-data engine must meet applicable emission standards before and after maintenance to be considered in compliance, as described in §1054.240(a) and (b).

(5) Calculate your deterioration factor using a linear least-squares fit of your test data, but treat the low-hour test point as occurring at hour zero. Your deterioration factor is the ratio of the calculated emission level at the point representing the full useful life to the calculated emission level at zero hours.

(6) If you test more than one engine to establish deterioration factors, average the deterioration factors from all the engines before rounding.

(7) If your durability engine fails between 80 percent and 100 percent of useful life, you may use the last emission measurement as the test point representing the full useful life, provided it occurred after at least 80 percent of the useful life.

(8) If your useful life is 1,000 hours or longer, and your durability engine fails between 50 percent and 100 percent of useful life, you may extrapolate your emission results to determine the emission level representing the full useful life, provided emissions were measured at least once after 50 percent of the useful life.

(9) Use good engineering judgment for all aspects of the effort to establish deterioration factors under this paragraph (b).

(10) You may use other testing methods to determine deterioration factors, consistent with good engineering judgment, as long as we approve those methods in advance.

(c) Include the following information in your application for certification:

(1) If you determine your deterioration factors based on test data from a different emission family, explain why this is appropriate and include all the emission measurements on which you base the deterioration factor.

(2) If you do testing to determine deterioration factors, describe the form and extent of service accumulation, including the method you use to accumulate hours.

§1054.250 What records must I keep and what reports must I send to EPA?

(a) Send the Designated Compliance Officer information related to your U.S.-directed production volumes as described in §1054.345. In addition, within 45 days after the end of the model year, you must send us a report describing information about engines you produced during the model year as follows:

(1) State the total production volume for each engine family that is not subject to reporting under §1054.345.

(2) State the total production volume for any engine family for which you produce engines after completing the reports required in §1054.345.

(3) If you produced exempted engines under the provisions of §1054.625(j)(1), report the number of exempted engines you produced for each engine model and identify the buyer or shipping destination for each exempted engine.

(4) For production volumes you report under this paragraph (a), identify whether or not the figures include California sales. Include a separate count of production volumes for California sales if those figures are available.

(b) Organize and maintain the following records:

(1) A copy of all applications and any summary information you send us.

(2) Any of the information we specify in §1054.205 that you were not required to include in your application.

(3) A detailed history of all emission-data engines. For each engine, describe all of the following:

(i) The emission-data engine's construction, including its origin and

buildup, steps you took to ensure that it represents production engines, any components you built specially for it, and all the components you include in your application for certification.

(ii) How you accumulated engine operating hours (service accumulation), including the dates and the number of hours accumulated.

(iii) All maintenance, including modifications, parts changes, and other service, and the dates and reasons for the maintenance.

(iv) All your emission tests, including documentation on routine and standard tests, as specified in part 40 CFR part 1065, and the date and purpose of each test.

(v) All tests to diagnose engine or emission control performance, giving the date and time of each and the reasons for the test.

(vi) Any other significant events.

(4) Production figures for each emission family divided by assembly plant.

(5) Keep a list of engine identification numbers for all the engines you produce under each certificate of conformity.

(c) Keep data from routine emission tests (such as test cell temperatures and relative humidity readings) for one year after we issue the associated certificate of conformity. Keep all other information specified in this section for eight years after we issue your certificate.

(d) Store these records in any format and on any media as long as you can promptly send us organized, written records in English if we ask for them. You must keep these records readily available. We may review them at any time.

§ 1054.255 What decisions may EPA make regarding my certificate of conformity?

(a) If we determine your application is complete and shows that the emission family meets all the requirements of this part and the Clean Air Act, we will issue a certificate of conformity for your emission family for that model year. We may make the approval subject to additional conditions.

(b) We may deny your application for certification if we determine that your emission family fails to comply with emission standards or other requirements of this part or the Clean Air Act. We will base our decision on all available information. If we deny your application, we will explain why in writing.

(c) In addition, we may deny your application or suspend or revoke your certificate if you do any of the following:

(1) Refuse to comply with any testing, reporting, or bonding requirements.

(2) Submit false or incomplete information (paragraph (e) of this section applies if this is fraudulent).

(3) Render inaccurate any test data.

(4) Deny us from completing authorized activities (see 40 CFR 1068.20). This includes a failure to provide reasonable assistance.

(5) Produce engines or equipment for importation into the United States at a location where local law prohibits us from carrying out authorized activities.

(6) Fail to supply requested information or amend your application to include all engines or equipment being produced.

(7) Take any action that otherwise circumvents the intent of the Clean Air Act or this part.

(d) We may void your certificate if you do not keep the records we require or do not give us information as required under this part or the Clean Air Act.

(e) We may void your certificate if we find that you intentionally submitted false or incomplete information.

(f) If we deny your application or suspend, revoke, or void your certificate, you may ask for a hearing (see § 1054.820).

Subpart D—Production-line Testing

§ 1054.300 Applicability.

This subpart specifies requirements for engine manufacturers to test their production engines for exhaust emissions to ensure that the engines are being produced as described in the application for certification. The production-line verification described in 40 CFR part 1060, subpart D, applies for equipment and components for evaporative emissions.

§ 1054.301 When must I test my production-line engines?

(a) If you produce engines that are subject to the requirements of this part, you must test them as described in this subpart, except as follows:

(1) Small-volume engine manufacturers may omit testing under this subpart.

(2) We may exempt small-volume emission families from routine testing under this subpart. Request this exemption in your application for certification and include your basis for projecting a production volume below 5,000 units. We will approve your request if we agree that you have made good-faith estimates of your production volumes. Your exemption is approved when we grant your certificate. You must promptly notify us if your actual production exceeds 5,000 units during the model year. If you exceed the production limit or if there is evidence of a nonconformity, we may require you to test production-line engines under this subpart, or under 40 CFR part 1068, subpart E, even if we have approved an exemption under this paragraph (a)(2).

(b) We may suspend or revoke your certificate of conformity for certain engine families if your production-line engines do not meet the requirements of this part or you do not fulfill your obligations under this subpart (see §§ 1054.325 and 1054.340).

(c) Other regulatory provisions authorize us to suspend, revoke, or void your certificate of conformity, or order recalls for engine families, without regard to whether they have passed these production-line testing requirements. The requirements of this subpart do not affect our ability to do selective enforcement audits, as described in 40 CFR part 1068. Individual engines in families that pass these production-line testing requirements must also conform to all applicable regulations of this part and 40 CFR part 1068.

(d) You may use alternate programs for testing production-line engines in the following circumstances:

(1) You may use analyzers and sampling systems that meet the field-testing requirements of 40 CFR part 1065, subpart J, but not the otherwise applicable requirements in 40 CFR part 1065 for laboratory testing, to demonstrate compliance with emission standards if you double the minimum sampling rate specified in § 1054.310(b). Use measured test results to determine whether engines comply with applicable standards without applying a measurement allowance. This alternate program does not require prior approval but we may disallow use of this option where we determine that use of field-grade equipment would prevent you from being able to demonstrate that your engines are being produced to conform to the specifications in your application for certification.

(2) You may ask to use another alternate program for testing production-line engines. In your request, you must show us that the alternate program gives equal assurance that your products meet the requirements of this part. We may waive some or all of this subpart's requirements if we approve your alternate approach. For example, in certain circumstances you may be able to give us equal assurance that your products meet the requirements of this part by using less rigorous measurement methods if you offset that by increasing the number of test engines.

(e) If you certify an engine family with carryover emission data, as described in § 1054.235(d), and these equivalent engine families consistently pass the production-line testing requirements over the preceding two-year period, you may ask for a reduced testing rate for further production-line testing for that family. The minimum testing rate is one engine per engine family. If we reduce your testing rate, we may limit our approval to any number of model years. In determining whether to approve your request, we may consider the number of engines that have failed the emission tests.

(f) We may ask you to make a reasonable number of production-line engines available for a reasonable time so we can test or inspect them for compliance with the requirements of this part.

§ 1054.305 How must I prepare and test my production-line engines?

This section describes how to prepare and test production-line engines. You must assemble the test engine in a way

that represents the assembly procedures for other engines in the engine family. You must ask us to approve any deviations from your normal assembly procedures for other production engines in the engine family.

(a) *Test procedures.* Test your production-line engines using the applicable testing procedures in subpart F of this part to show you meet the emission standards in subpart B of this part.

(b) *Modifying a test engine.* Once an engine is selected for testing (see § 1054.310), you may adjust, repair, prepare, or modify it or check its emissions only if one of the following is true:

(1) You document the need for doing so in your procedures for assembling and inspecting all your production engines and make the action routine for all the engines in the engine family.

(2) This subpart otherwise specifically allows your action.

(3) We approve your action in advance.

(c) *Engine malfunction.* If an engine malfunction prevents further emission testing, ask us to approve your decision to either repair the engine or delete it from the test sequence.

(d) *Setting adjustable parameters.* Before any test, we may require you to adjust any adjustable parameter to any setting within its physically adjustable range.

(1) [Reserved]

(2) We may specify adjustments within the physically adjustable range by considering their effect on emission levels. We may also consider how likely it is that someone will make such an adjustment with in-use equipment.

(3) We may specify an air-fuel ratio within the adjustable range specified in § 1054.115(b).

(e) *Stabilizing emission levels.* Use good engineering judgment to operate your engines before testing such that deterioration factors can be applied appropriately. Determine the stabilization period as follows:

(1) For engine families with a useful life at or below 300 hours, operate the engine for the same number of hours before starting emission measurements that you used for the emission-data engine, within one hour. For example, if the emission-data engine operated for 8 hours before the low-hour emission test, operate the test engines for 7 to 9 hours before starting emission measurements.

(2) For engine families with a useful life above 300 hours, operate each engine for no more than the greater of two periods:

(i) 12 hours.

(ii) The number of hours you operated your emission-data engine for certifying the engine family (see 40 CFR part 1065, subpart E, or the applicable regulations governing how you should prepare your test engine).

(f) *Damage during shipment.* If shipping an engine to a remote facility for production-line testing makes necessary an adjustment or repair, you must wait until after the initial emission test to do this work. We may waive this requirement if the test would be impossible or unsafe or if it would permanently damage the engine. Report to us, in your written report under § 1054.345, all adjustments or repairs you make on test engines before each test.

(g) *Retesting after invalid tests.* You may retest an engine if you determine an emission test is invalid under subpart F of this part. Explain in your written report reasons for invalidating any test and the emission results from all tests. If we determine that you improperly invalidated a test, we may require you to ask for our approval for future testing before substituting results of the new tests for invalid ones.

§ 1054.310 How must I select engines for production-line testing?

(a) Test engines from each engine family as described in this section based on test periods, as follows:

(1) For engine families with projected U.S.-directed production volume of at least 1,600, the test periods are consecutive quarters (3 months). However, if your annual production period is less than 12 months long, you may take the following alternative approach to define quarterly test periods:

(i) If your annual production period is 120 days or less, the whole model year constitutes a single test period.

(ii) If your annual production period is 121 to 210 days, divide the annual

production period evenly into two test periods.

(iii) If your annual production period is 211 to 300 days, divide the annual production period evenly into three test periods.

(iv) If your annual production period is 301 days or longer, divide the annual production period evenly into four test periods.

(2) For engine families with projected U.S.-directed production volume below 1,600, the whole model year constitutes a single test period.

(b) Early in each test period, randomly select and test an engine from the end of the assembly line for each engine family.

(1) In the first test period for newly certified engines, randomly select and test one more engine. Then, calculate the required sample size for the model year as described in paragraph (c) of this section.

(2) In later test periods of the same model year, combine the new test result with all previous testing in the model year. Then, calculate the required sample size for the model year as described in paragraph (c) of this section.

(3) In the first test period for engine families relying on previously submitted test data, combine the new test result with the last test result from the previous model year. Then, calculate the required sample size for the model year as described in paragraph (c) of this section. Use the last test result from the previous model year only for this first calculation. For all subsequent calculations, use only results from the current model year.

(c) Calculate the required sample size for each engine family. Separately calculate this figure for $HC+NO_X$ and CO. The required sample size is the greater of these calculated values. Use the following equation:

$$N = \left[\frac{(t_{95} \cdot \sigma)}{(x - STD)} \right]^2 + 1$$

Where:

N = Required sample size for the model year.

t_{95} = 95% confidence coefficient, which depends on the number of tests completed, n, as specified in the table in paragraph (c)(1) of this section. It defines 95% confidence intervals for a one-tail distribution.

σ = Test sample standard deviation (see paragraph (c)(2) of this section).

x = Mean of emission test results of the sample.

STD = Emission standard (or family emission limit, if applicable).

(1) Determine the 95% confidence coefficient, t^{95}, from the following table:

n	t_{95}	n	t_{95}	n	t_{95}
2	6.31	12	1.80	22	1.72
3	2.92	13	1.78	23	1.72
4	2.35	14	1.77	24	1.71
5	2.13	15	1.76	25	1.71
6	2.02	16	1.75	26	1.71
7	1.94	17	1.75	27	1.71
8	1.90	18	1.74	28	1.70
9	1.86	19	1.73	29	1.70
10	1.83	20	1.73	30	1.70
11	1.81	21	1.72	31+	1.65

(2) Calculate the standard deviation, for the test sample using the following formula:

$$\sigma = \left[\sum \frac{(X_i - x)^2}{(n-1)} \right]^{\frac{1}{2}}$$

Where:

X_i = Emission test result for an individual engine.

n = The number of tests completed in an engine family.

(d) Use final deteriorated test results to calculate the variables in the equations in paragraph (c) of this section (see § 1054.315(a)(2)).

(e) After each new test, recalculate the required sample size using the updated mean values, standard deviations, and the appropriate 95-percent confidence coefficient.

(f) Distribute the remaining engine tests evenly throughout the rest of the year. You may need to adjust your schedule for selecting engines if the required sample size changes. If your scheduled quarterly testing for the remainder of the model year is sufficient to meet the calculated sample size, you may wait until the next quarter to do additional testing. Continue to randomly select engines from each engine family.

(g) Continue testing until one of the following things happens:

(1) After completing the minimum number of tests required in paragraph (b) of this section, the number of tests completed in an engine family, n, is greater than the required sample size, N, and the sample mean, x, is less than or equal to the emission standard. For example, if N = 5.1 after the fifth test, the sample-size calculation does not allow you to stop testing.

(2) The engine family does not comply according to § 1054.315.

(3) You test 30 engines from the engine family.

(4) You test one percent of your projected annual U.S.-directed production volume for the engine family, rounded to the nearest whole number. Do not count an engine under this paragraph (g)(4) if it fails to meet an applicable emission standard.

(5) You choose to declare that the engine family does not comply with the requirements of this subpart.

(h) If the sample-size calculation allows you to stop testing for one pollutant but not another, you must continue measuring emission levels of all pollutants for any additional tests required under this section. However, you need not continue making the calculations specified in this subpart for the pollutant for which testing is not required. This paragraph (h) does not affect the number of tests required under this section, the required calculations in § 1054.315, or the remedial steps required under § 1054.320.

(i) You may elect to test more randomly chosen engines than we require under this section. Include these engines in the sample-size calculations.

§ 1054.315 How do I know when my engine family fails the production-line testing requirements?

This section describes the pass-fail criteria for the production-line testing requirements. We apply these criteria on an emission-family basis. See § 1054.320 for the requirements that apply to individual engines that fail a production-line test.

(a) Calculate your test results as follows:

(1) *Initial and final test results.* Calculate and round the test results for each engine. If you do several tests on an engine, calculate the initial results for each test, then add all the test results together and divide by the number of tests. Round this final calculated value for the final test results on that engine.

(2) *Final deteriorated test results.* Apply the deterioration factor for the engine family to the final test results (see § 1054.240(c)).

(3) *Round deteriorated test results.* Round the results to the number of decimal places in the emission standard expressed to one more decimal place.

(b) Construct the following CumSum Equation for each engine family for $HC+NO_X$ and CO emissions:

$C_i = \text{Max}\ [0 \text{ or } C_{i-1} + X_i - (STD + 0.25 \times \sigma)]$

Where:

C_i = The current CumSum statistic.

C_{i-1} = The previous CumSum statistic. For the first test, the CumSum statistic is 0 (i.e., $C_1 = 0$).

X_i = The current emission test result for an individual engine.

STD = Emission standard (or family emission limit, if applicable).

(c) Use final deteriorated test results to calculate the variables in the equation in paragraph (b) of this section (see § 1054.315(a)).

(d) After each new test, recalculate the CumSum statistic.

(e) If you test more than the required number of engines, include the results from these additional tests in the CumSum Equation.

(f) After each test, compare the current CumSum statistic, C_i, to the recalculated Action Limit, H, defined as $H = 5.0 \times \sigma$.

(g) If the CumSum statistic exceeds the Action Limit in two consecutive tests, the engine family fails the production-line testing requirements of this subpart. Tell us within ten working days if this happens. You may request to amend the application for certification to raise the FEL of the entire engine family as described in § 1054.225(f).

(h) If you amend the application for certification for an engine family under § 1054.225, do not change any previous calculations of sample size or CumSum statistics for the model year.

§ 1054.320 What happens if one of my production-line engines fails to meet emission standards?

(a) If you have a production-line engine with final deteriorated test results exceeding one or more emission standards (see § 1054.315(a)), the certificate of conformity is automatically suspended for that failing engine. You must take the following actions before your certificate of conformity can cover that engine:

(1) Correct the problem and retest the engine to show it complies with all emission standards.

(2) Include the test results and describe the remedy for each engine in the written report required under § 1054.345.

(b) You may request to amend the application for certification to raise the FEL of the entire engine family at this point (see § 1054.225).

§ 1054.325 What happens if an engine family fails the production-line testing requirements?

(a) We may suspend your certificate of conformity for an engine family if it fails under § 1054.315. The suspension may apply to all facilities producing engines from an engine family even if you find noncompliant engines only at one facility.

(b) We will tell you in writing if we suspend your certificate in whole or in part. We will not suspend a certificate until at least 15 days after the engine family fails. The suspension is effective when you receive our notice.

(c) Up to 15 days after we suspend the certificate for an engine family, you may ask for a hearing (see § 1054.820). If we agree before a hearing occurs that we used erroneous information in deciding to suspend the certificate, we will reinstate the certificate.

(d) Section 1054.335 specifies steps you must take to remedy the cause of the engine family's production-line failure. All the engines you have produced since the end of the last test period are presumed noncompliant and should be addressed in your proposed remedy. We may require you to apply the remedy to engines produced earlier if we determine that the cause of the failure is likely to have affected the earlier engines.

(e) You may request to amend the application for certification to raise the FEL of the engine family before or after we suspend your certificate as described in § 1054.225(f). We will approve your request if the failure is not caused by a defect and it is clear that you used good engineering judgment in establishing the original FEL.

§ 1054.330 May I sell engines from an engine family with a suspended certificate of conformity?

You may sell engines that you produce after we suspend the engine family's certificate of conformity under § 1054.315 only if one of the following occurs:

(a) You test each engine you produce and show it complies with emission standards that apply.

(b) We conditionally reinstate the certificate for the engine family. We may do so if you agree to recall all the affected engines and remedy any noncompliance at no expense to the owner if later testing shows that the engine family still does not comply.

§ 1054.335 How do I ask EPA to reinstate my suspended certificate?

(a) Send us a written report asking us to reinstate your suspended certificate. In your report, identify the reason for noncompliance, propose a remedy for the engine family, and commit to a date for carrying it out. In your proposed remedy include any quality control measures you propose to keep the problem from happening again.

(b) Give us data from production-line testing that shows the remedied engine family complies with all the emission standards that apply.

§ 1054.340 When may EPA revoke my certificate under this subpart and how may I sell these engines again?

(a) We may revoke your certificate for an engine family in the following cases:

(1) You do not meet the reporting requirements.

(2) Your engine family fails to comply with the requirements of this subpart and your proposed remedy to address a suspended certificate under § 1054.335 is inadequate to solve the problem or requires you to change the engine's design or emission control system.

(b) To sell engines from an engine family with a revoked certificate of conformity, you must modify the engine family and then show it complies with the requirements of this part.

(1) If we determine your proposed design change may not control emissions for the engine's full useful life, we will tell you within five working days after receiving your report. In this case we will decide whether production-line testing will be enough for us to evaluate the change or whether you need to do more testing.

(2) Unless we require more testing, you may show compliance by testing production-line engines as described in this subpart.

(3) We will issue a new or updated certificate of conformity when you have met these requirements.

§ 1054.345 What production-line testing records must I send to EPA?

(a) Within 45 days of the end of each test period, send us a report with the following information:

(1) Describe any facility used to test production-line engines and state its location.

(2) State the total U.S.-directed production volume and number of tests for each engine family.

(3) Describe how you randomly selected engines.

(4) Describe each test engine, including the engine family's identification and the engine's model year, build date, model number, identification number, and number of hours of operation before testing.

(5) Identify how you accumulated hours of operation on the engines and describe the procedure and schedule you used.

(6) Provide the test number; the date, time and duration of testing; test procedure; all initial test results; final test results; and final deteriorated test results for all tests. Provide the emission results for all measured pollutants. Include information for both valid and invalid tests and the reason for any invalidation.

(7) Describe completely and justify any nonroutine adjustment, modification, repair, preparation, maintenance, or test for the test engine if you did not report it separately under this subpart. Include the results of any emission measurements, regardless of the procedure or type of engine.

(8) Provide the CumSum analysis required in § 1054.315 and the sample-size calculation required in § 1054.310 for each engine family.

(9) Report on each failed engine as described in § 1054.320.

(10) State the date the test period ended for each engine family.

(b) We may ask you to add information to your written report so we can determine whether your new engines conform with the requirements of this

subpart. We may also ask you to send less information.

(c) An authorized representative of your company must sign the following statement:

We submit this report under sections 208 and 213 of the Clean Air Act. Our production-line testing conformed completely with the requirements of 40 CFR part 1054. We have not changed production processes or quality-control procedures for test engines in a way that might affect emission controls. All the information in this report is true and accurate to the best of my knowledge. I know of the penalties for violating the Clean Air Act and the regulations. (Authorized Company Representative)

(d) Send electronic reports of production-line testing to the Designated Compliance Officer using an approved information format. If you want to use a different format, send us a written request with justification for a waiver.

(e) We will send copies of your reports to anyone from the public who asks for them. Section 1054.815 describes how we treat information you consider confidential.

§ 1054.350 What records must I keep?

(a) Organize and maintain your records as described in this section. We may review your records at any time.

(b) Keep paper or electronic records of your production-line testing for eight years after you complete all the testing required for an engine family in a model year.

(c) Keep a copy of the written reports described in § 1054.345.

(d) Keep the following additional records:

(1) A description of all test equipment for each test cell that you can use to test production-line engines.

(2) The names of supervisors involved in each test.

(3) The name of anyone who authorizes adjusting, repairing, preparing, or modifying a test engine and the names of all supervisors who oversee this work.

(4) If you shipped the engine for testing, the date you shipped it, the associated storage or port facility, and the date the engine arrived at the testing facility.

(5) Any records related to your production-line tests that are not in the written report.

(6) A brief description of any significant events during testing not otherwise described in the written report or in this section.

(7) Any information specified in § 1054.345 that you do not include in your written reports.

(e) If we ask, you must give us a more detailed description of projected or actual production figures for an engine family. We may ask you to divide your production figures by maximum engine power, displacement, fuel type, or assembly plant (if you produce engines at more than one plant).

(f) Keep records of the engine identification number for each engine you produce under each certificate of conformity. You may identify these numbers as a range. Give us these records within 30 days if we ask for them.

(g) We may ask you to keep or send other information necessary to implement this subpart.

Subpart E—In-use Testing

§ 1054.401 General provisions.

We may perform in-use testing of any engines or equipment subject to the standards of this part. We will consult with you as needed for information or special equipment related to testing your engines.

Subpart F—Test Procedures

§ 1054.501 How do I run a valid emission test?

(a) *Applicability*. This subpart is addressed to you as a manufacturer but it applies equally to anyone who does testing for you, and to us when we perform testing to determine if your engines or equipment meet emission standards.

(b) *General requirements*. Use the equipment and procedures for spark-ignition engines in 40 CFR part 1065 to determine whether engines meet the exhaust emission standards, as follows:

(1) Measure the emissions of all exhaust constituents subject to emissions standards as specified in § 1054.505 and 40 CFR part 1065. Measure CO_2, N_2O, and CH_4 as described in § 1054.235. See § 1054.650 for special provisions that

apply for variable-speed engines (including engines shipped without governors).

(2) Use the fuels and lubricants specified in 40 CFR part 1065, subpart H, for all the testing we require in this part. Except as specified in paragraph (d) of this section, use gasoline meeting the specifications described in 40 CFR 1065.710 for general testing. For service accumulation, use the test fuel or any commercially available fuel that is representative of the fuel that in-use engines will use. You may alternatively use gasoline blended with ethanol as follows:

(i) For handheld engines, you may use the ethanol-blended fuel for certifying engines under this part without our advance approval. If you use the blended fuel for certifying a given engine family, you may also use it for production-line testing or any other testing you perform for that engine family under this part. If you use the blended fuel for certifying a given engine family, we may use the blended fuel or the specified gasoline test fuel with that engine family.

(ii) For nonhandheld engines, you may use the blended fuel for certifying engines under this part without our advance approval. If you use the blended fuel for certifying a given engine family, you must also use it for production-line testing or any other testing you perform for that engine family under this part. If the certification of all your Class I (or Class II) engine families in a given model year is based on test data collected using the blended fuel, we will also use the blended fuel for testing your Class I (or Class II) engines. If the certification of some but not all of your Class I (or Class II) engine families in a given model year is based on test data collected using the blended fuel, we may use the blended fuel or the specified gasoline test fuel for testing any of your Class I (or Class II) engines.

(iii) The blended fuel must consist of a mix of gasoline meeting the specifications described in 40 CFR 1065.710 for general testing and fuel-grade ethanol meeting the specifications described in 40 CFR 1060.501(c) such that the blended fuel has 10.0±1.0 percent ethanol by volume. You may also use ethanol with a higher or lower purity if you show us that it will not affect your ability to demonstrate compliance with the applicable emission standards. You do not need to measure the ethanol concentration of such blended fuels and may instead calculate the blended composition by assuming that the ethanol is pure and mixes perfectly with the base fuel.

(iv) You may ask to use the provisions of this paragraph (b)(2) for a blended test fuel containing less than 10 percent ethanol if your engine is subject to emission standards from other organizations that specify testing with that fuel. If we approve testing with such a fuel, we may test your engines with that test fuel, with gasoline, or with a 10-percent ethanol blend.

(3) Ambient conditions for duty-cycle testing must be within ranges specified in 40 CFR 1065.520, subject to the provisions of § 1054.115(c).

(i) *Corrections.* Emissions may not be corrected for the effects of test temperature or pressure. You may correct emissions for humidity as specified in 40 CFR 1065.670.

(ii) *Intake air temperature.* Measure engine intake air temperature as described in 40 CFR 1065.125, and control it if necessary, consistent with good engineering judgment. For example, since the purpose of this requirement is to ensure that the measured air temperature is consistent with the intake air temperature that would occur during in-use operation at the same ambient temperature, do not cool the intake air and do not measure air temperature at a point where engine heat affects the temperature measurement.

(4) The provisions of 40 CFR 1065.405 describes how to prepare an engine for testing. However, you may consider emission levels stable without measurement after 12 hours of engine operation, except for the following special provisions that apply for engine families with a useful life of 300 hours or less:

(i) We will not approve a stabilization period longer than 12 hours even if you show that emissions are not yet stabilized.

(ii) Identify the number of hours you use to stabilize engines for low-hour

emission measurements. You may consider emissions stable at any point less than 12 hours. For example, you may choose a point at which emission levels reach a low value before the effects of deterioration are established.

(5) Prepare your engines for testing by installing a governor that you normally use on production engines, consistent with §§ 1054.235(b) and 1054.505.

(6) During testing, supply the engine with fuel in a manner consistent with how it will be supplied with fuel in use. If you sell engines with complete fuel systems and your production engines will be equipped with a vapor line that routes running loss vapors into the engine's intake system, measure exhaust emissions using a complete fuel system representing a production configuration that sends fuel vapors to the test engine's intake system in a way that represents the expected in-use operation. You may alternatively demonstrate by engineering analysis that your engines will continue to meet emission standards for any amount of running loss vapor that can reasonably be expected during in-use operation.

(7) Determine the carbon mass fraction of fuel, w_c, using a calculation based on measured fuel properties as described in 40 CFR 1065.655(d)(1). You may not use the default values specified in 40 CFR 1065.655(d)(2).

(c) *Special and alternate procedures.* You may use special or alternate procedures to the extent we allow them under 40 CFR 1065.10. The following additional provisions apply:

(1) If you are unable to run the test cycle specified in this part for your engine, use an alternate test cycle that will result in a cycle-weighted emission measurement equivalent to the expected average in-use emissions. This cycle must be approved under 40 CFR 1065.10.

(2) Describe in your application for certification any specially designed fixtures or other hardware if they are needed for proper testing of your engines. (Note: You do not need to specify the size or performance characteristics of engine dynamometers.) You must send us these fixtures or other hardware if we ask for them. We may waive the requirement of § 1054.205(aa) to identify a test facility in the United States for such engine families as long as the projected U.S.-directed production volume of all your engine families using the provisions of this paragraph (c)(2) is less than 5 percent of your total production volume from all engine families certified under this part 1054.

(d) *Wintertime engines.* You may test wintertime engines at the ambient temperatures specified in 40 CFR 1065.520, even though this does not represent in-use operation for these engines (40 CFR 1065.10(c)(1)). In this case, you may use good engineering judgment to modify the test engine as needed to achieve intake temperatures that are analogous to in-use conditions. You may also test wintertime engines at reduced ambient temperatures as specified in 40 CFR 1051.505. Use the gasoline specified for low-temperature testing only if you test your engines at ambient temperatures below 20 °C.

[73 FR 59259, Oct. 8, 2008, as amended at 74 FR 56511, Oct. 30, 2009]

§ 1054.505 How do I test engines?

(a) This section describes how to test engines under steady-state conditions. For handheld engines you must perform tests with discrete-mode sampling. For nonhandheld engines we allow you to perform tests with either discrete-mode or ramped-modal testing methods. You must use the same modal testing method for certification and all other testing you perform for an engine family. If we test your engines to confirm that they meet emission standards, we will use the modal testing method you select for your own testing. If you submit certification test data collected with both discrete-mode and ramped-modal testing (either in your original application or in an amendment to your application), either method may be used for subsequent testing. We may also perform other testing as allowed by the Clean Air Act. Conduct duty-cycle testing as follows:

(1) For discrete-mode testing, sample emissions separately for each mode, then calculate an average emission level for the whole cycle using the weighting factors specified for each mode. In each mode, operate the engine

for at least 5 minutes, then sample emissions for at least 1 minute. Control engine speed as specified in this section. Use one of the following methods for confirming torque values for nonhandheld engines:

(i) Calculate torque-related cycle statistics and compare with the established criteria as specified in 40 CFR 1065.514 to confirm that the test is valid.

(ii) Evaluate each mode separately to validate the duty cycle. All torque feedback values recorded during non-idle sampling periods must be within ±2 percent of the reference value or within ±0.27 N·m of the reference value, whichever is greater. Also, the mean torque value during non-idle sampling periods must be within ±1 percent of the reference value or ±0.12 N·m of the reference value, whichever is greater. Control torque during idle as specified in paragraph (c) of this section.

(2) For ramped-modal testing, start sampling at the beginning of the first mode and continue sampling until the end of the last mode. Calculate emissions and cycle statistics the same as for transient testing as specified in 40 CFR part 1065. Unless we specify otherwise, you may simulate the governor for ramped-modal testing consistent with good engineering judgment.

(b) Measure emissions by testing the engine on a dynamometer with the test procedures for constant-speed engines in 40 CFR part 1065 while using one of the steady-state duty cycles identified in this paragraph (b) to determine whether it meets the exhaust emission standards specified in §1054.101(a). This requirement applies for all engines, including those not meeting the definition of ''constant-speed engine'' in 40 CFR 1065.1001.

(1) For handheld engines, use the two-mode duty cycle described in paragraph (a) of Appendix II of this part. Establish an engine's rated speed as follows:

(i) For ungoverned handheld engines used in fixed-speed applications all having approximately the same nominal in-use operating speed, hold engine speed within 350 rpm of the nominal speed for testing. We may allow you to include in your engine family without additional testing a small number engines that will be installed such that they have a different nominal speed. If your engine family includes a majority of engines with approximately the same nominal in-use operating speed and a substantial number of engines with different nominal speeds, you must test engines as specified in this paragraph (b)(1)(i) and paragraph (b)(1)(ii) of this section.

(ii) For ungoverned handheld engines for which there is not a dominant value for nominal in-use operating speeds, hold engine speed within 350 rpm of the point at which the engine generates maximum power.

(iii) For governed handheld engines, hold engine speed at maximum test speed, as defined in 40 CFR 1065.1001.

(2) For nonhandheld engines, use the six-mode duty cycle or the corresponding ramped-modal cycle described in paragraph (b) of Appendix II of this part. Control engine speeds and torques during idle mode as specified in paragraph (c) of this section and during full-load operating modes as specified in paragraph (d) of this section. For all other modes, control torque as needed to meet the cycle-validation criteria in 40 CFR 1065.514; control the engine speed to within 5 percent of the nominal speed specified in paragraph (d) of this section or let the installed governor (in the production configuration) control engine speed. The governor may be adjusted before emission sampling to target the nominal speed identified in paragraph (d) of this section, but the installed governor must control engine speed throughout the emission-sampling period whether the governor is adjusted or not. Note that ramped-modal testing involves continuous sampling, so governor adjustments may not occur during such a test. Note also that our testing may involve running the engine with the governor in the standard configuration even if you adjust the governor as described in this paragraph (a)(2) for certification or production-line testing.

(c) During idle mode for nonhandheld engines, operate the engine with the following parameters:

(1) Allow the engine to operate at the idle speed determined by the installed governor. If any production engines

from the engine family have a user-selectable idle speed, operate the engine with an installed governor that controls engine speed to the lowest available speed setting.

(2) Keep engine torque under 5 percent of the nominal torque value for Mode 1.

(3) You must conduct testing at the idle mode even if the allowable torque values overlap with those for another specified mode.

(d) During full-load operation for nonhandheld engines, operate the engine with the following parameters:

(1) In normal circumstances, select a test speed of either 3060 rpm or 3600 rpm that is most appropriate for the engine family. If all the engines in the engine family are used in intermediate-speed equipment, select a test speed of 3060 rpm. The test associated with intermediate-speed operation is referred to as the A Cycle. If all the engines in the engine family are used in rated-speed equipment, select a test speed of 3600 rpm. The test associated with rated-speed operation is referred to as the B Cycle. If an engine family includes engines used in both intermediate-speed equipment and rated-speed equipment, select the test speed for emission-data engines that will result in worst-case emissions. In unusual circumstances, you may ask to use a test speed different than that specified in this paragraph (d)(1) if it better represents in-use operation.

(2) Operate the engine ungoverned at wide-open throttle at the test speed established in paragraph (d)(1) of this section until the engine reaches thermal stability as described in 40 CFR 1065.530(a)(2)(ii). Record the torque value after stabilization. Use this value for the full-load torque setting and for denormalizing the rest of the duty cycle.

(3) Control engine speed during emission sampling to stay within 5 percent of the nominal speed identified in paragraph (d)(1) of this section.

(4) The provisions of this paragraph (d) apply instead of the engine mapping procedures in 40 CFR 1065.510.

(e) See 40 CFR part 1065 for detailed specifications of tolerances and calculations.

§ 1054.520 What testing must I perform to establish deterioration factors?

Sections 1054.240 and 1054.245 describe the required methods for testing to establish deterioration factors for an emission family.

Subpart G—Special Compliance Provisions

§ 1054.601 What compliance provisions apply?

(a) Engine and equipment manufacturers, as well as owners, operators, and rebuilders of engines subject to the requirements of this part, and all other persons, must observe the provisions of this part, the requirements and prohibitions in 40 CFR part 1068, and the provisions of the Clean Air Act.

(b) Note that the provisions of 40 CFR 1068.103(f) prohibit engine manufacturers from deviating from normal production and inventory practices to stockpile engines with a date of manufacture before new or changed emission standards take effect. If your normal practice for producing engines subject to this part 1054 includes maintaining engines in inventory for some engine families for more than 12 months, you must get our prior approval to continue this practice for model years in which emission standards change. Include in your request information showing that this is necessary and it is consistent with your normal business practice. Unless we specify otherwise, include relevant inventory and production records from the preceding eight years. Note that 40 CFR 1068.103(f) applies to any engines inventoried beyond your normal practice and authorizes us to review your records to verify your normal practices, whether or not you maintain the engines in inventory for more than 12 months.

(c) The provisions of 40 CFR 1068.215 apply for cases in which the manufacturer takes possession of engines for purposes of recovering components as described in this paragraph (c). Note that this paragraph (c) does not apply for certified engines that still have the emission control information label since such engines do not need an exemption.

(1) You must label the engine as specified in 40 CFR 1068.215(c)(3), except

that the label may be removable as specified in 40 CFR 1068.45(b).

(2) You may not resell the engine. For components other than the engine block, you may generate revenue from the sale of the components that you recover, or from the sale of new engines containing these components. You may also use components other than the engine block for engine rebuilds as otherwise allowed under the regulations. You may use the engine block from an engine that is exempted under this paragraph (c) only to make a new engine, and then only where such an engine has a separate identity from the original engine.

(3) Once the engine has reached its final destination, you may stop collecting records describing the engine's final disposition and how you use the engine. This does not affect the requirement to maintain the records you have already collected under 40 CFR 1068.215. This also does not affect the requirement to maintain records for new engines.

[73 FR 59259, Oct. 8, 2008, as amended at 75 FR 23025, Apr. 30, 2010]

§ 1054.610 What is the exemption for delegated final assembly?

The provisions of 40 CFR 1068.261 related to delegated final assembly do not apply for handheld engines certified under this part 1054. The provisions of 40 CFR 1068.261 apply for nonhandheld engines, with the following exceptions and clarifications:

(a) Through the 2014 model year, you may use the provisions of this section for engines you sell to a distributor, where you establish a contractual arrangement in which you designate the distributor to be your agent in all matters related to compliance with the requirements of this section. Identify each of the distributors you intend to designate as your agent under this paragraph (a) in your application for certification. You may continue to use the provisions of this paragraph (a) this for later model years for specific distributors if we approve it based on your clear and convincing demonstration that each distributor can be expected to comply fully with the requirements of this section and 40 CFR 1068.261. We may set additional conditions beyond the provisions specified in this section to ensure that all engines will be in a certified configuration when installed by the equipment manufacturer.

(b) If you identify distributors as your agents under paragraph (a) of this section, you must perform or arrange for audits of all participating distributors and equipment manufacturers based on the following auditing rate instead of the provisions specified in 40 CFR 1068.261(d)(3)(i) and (ii):

(1) If you sell engines to 48 or more equipment manufacturers under the provisions of this section, you must annually perform or arrange for audits of twelve equipment manufacturers to whom you sell engines under this section. To select individual equipment manufacturers, divide all the affected equipment manufacturers into quartiles based on the number of engines they buy from you; select equal numbers of equipment manufacturers from each quartile each model year as much as possible. Vary the equipment manufacturers selected for auditing from year to year, though audits may be repeated in later model years if you find or suspect that a particular equipment manufacturer is not properly installing aftertreatment devices.

(2) If you sell engines to fewer than 48 equipment manufacturers under the provisions of this section, set up a plan to perform or arrange for audits of each equipment manufacturer on average once every four model years.

§ 1054.612 What special provisions apply for equipment manufacturers modifying certified nonhandheld engines?

The provisions of this section apply for all emission families through the 2014 model year; starting with the 2015 model year, these provisions are limited to small-volume emission families.

(a) *General provisions.* If you buy certified nonhandheld engines for installation in equipment you produce, but you install the engines such that they use intake or exhaust systems that are not part of the originally certified configuration, you become the engine manufacturer for those engines and must certify that they will meet emission standards. We will allow you to utilize

the provisions for simplified certification specified in paragraph (b) of this section, as long as your design stays within the overall specifications from the original engine manufacturer (such as exhaust backpressure) and you use a catalyst as described in the original engine manufacturer's application for certification.

(b) *Simplified certification*. You must perform testing with an emission-data engine to show that you meet exhaust emission standards; however, you may use the deterioration factor from the original engine manufacturer. The production-line testing requirements in subpart D of this part do not apply for engines certified under this section. You must meet all the other requirements that apply to engine manufacturers for engines subject to standards under this part. The engine family must have the same useful life value specified by the original engine manufacturer for that engine. In your application for certification describe any differences between the original engine manufacturer's design and yours and explain why the deterioration data generated by the original engine manufacturer is appropriate for your configuration.

(c) *Engine exemption*. As an engine manufacturer, you may produce nonconforming engines for equipment manufacturers as allowed under this section. You do not have to request this exemption for your engines, but you must have written assurance from equipment manufacturers that they need a certain number of exempted engines under this section. Add a removable label to the engines as described in 40 CFR 1068.262.

§ 1054.615 What is the exemption for engines certified to standards for Large SI engines?

(a) An engine is exempt from the requirements of this part if it is in an emission family that has a valid certificate of conformity showing that it meets emission standards and other requirements under 40 CFR part 1048 for the appropriate model year.

(b) The only requirements or prohibitions from this part that apply to an engine that is exempt under this section are in this section.

(c) If your engines do not have the certificate required in paragraph (a) of this section, they will be subject to the provisions of this part. Introducing these engines into U.S. commerce without a valid exemption or certificate of conformity violates the prohibitions in 40 CFR 1068.101(a).

(d) Engines exempted under this section are subject to all the requirements affecting engines under 40 CFR part 1048, including evaporative emission standards. The requirements and restrictions of 40 CFR part 1048 apply to anyone manufacturing these engines, anyone manufacturing equipment that uses these engines, and all other persons in the same manner as if these were nonroad spark-ignition engines above 19 kW.

(e) Engines exempted under this section may not generate or use emission credits under this part 1054.

§ 1054.620 What are the provisions for exempting engines used solely for competition?

The provisions of this section apply for new engines and equipment built on or after January 1, 2010.

(a) We may grant you an exemption from the standards and requirements of this part for a new engine on the grounds that it is to be used solely for competition. The requirements of this part, other than those in this section, do not apply to engines that we exempt for use solely for competition.

(b) We will exempt engines that we determine will be used solely for competition. The basis of our determination is described in paragraphs (c) and (d) of this section. Exemptions granted under this section are good for only one model year and you must request renewal for each subsequent model year. We will not approve your renewal request if we determine the engine will not be used solely for competition.

(c) Engines meeting all the following criteria are considered to be used solely for competition:

(1) Neither the engine nor any equipment containing the engine may be displayed for sale in any public dealership or otherwise offered for sale to the general public. Note that this does not preclude display of these engines as long

as they are not available for sale to the general public.

(2) Sale of the equipment in which the engine is installed must be limited to professional competition teams, professional competitors, or other qualified competitors. For replacement engines, the sale of the engine itself must be limited to professional racing teams, professional racers, other qualified racers, or to the original equipment manufacturer.

(3) The engine and the equipment in which it is installed must have performance characteristics that are substantially superior to noncompetitive models.

(4) The engines are intended for use only as specified in paragraph (e) of this section.

(d) You may ask us to approve an exemption for engines not meeting the criteria listed in paragraph (c) of this section as long as you have clear and convincing evidence that the engines will be used solely for competition.

(e) Engines are considered to be used solely for competition only if their use is limited to competition events sanctioned by a state or federal government agency or another widely recognized public organization with authorizing permits for participating competitors. Operation of such engines may include only racing events, trials to qualify for racing events, and practice associated with racing events. Authorized attempts to set speed records are also considered racing events. Engines will not be considered to be used solely for competition if they are ever used for any recreational or other noncompetitive purpose. Any use of exempt engines in recreational events is a violation of 40 CFR 1068.101(b)(4).

(f) You must permanently label engines exempted under this section to clearly indicate that they are to be used only for competition. Failure to properly label an engine will void the exemption for that engine.

(g) If we request it, you must provide us any information we need to determine whether the engines are used solely for competition. This would generally include documentation regarding the number of engines and the ultimate purchaser of each engine as well as any documentation showing an equipment manufacturer's request for an exempted engine. Keep these records for five years.

§ 1054.625 What requirements apply under the Transition Program for Equipment Manufacturers?

The provisions of this section allow equipment manufacturers to produce equipment with Class II engines that are subject to less stringent exhaust emission standards after the Phase 3 emission standards begin to apply. To be eligible to use these provisions, you must follow all the instructions in this section. See § 1054.626 for requirements that apply specifically to companies that manufacture equipment outside the United States and to companies that import such equipment without manufacturing it. Engines and equipment you produce under this section are exempt from the prohibitions in 40 CFR 1068.101(a)(1) with respect to exhaust emissions, subject to the provisions of this section. Except as specified in paragraph (e) of this section, equipment exempted under this section must meet all applicable requirements related to evaporative emissions.

(a) *General.* If you are an equipment manufacturer, you may introduce into U.S. commerce limited numbers of nonroad equipment with Class II engines exempted under this section. You may use the exemptions in this section only if you have primary responsibility for designing and manufacturing equipment and your manufacturing procedures include installing some engines in this equipment. Consider all U.S.-directed equipment production in showing that you meet the requirements of this section, including those from any parent or subsidiary companies and those from any other companies you license to produce equipment for you. If you produce a type of equipment that has more than one engine, count each engine separately. These provisions are available during the first four model years that the Phase 3 exhaust emission standards apply.

(b) *Allowances.* Calculate how many pieces of equipment with exempted engines you may produce under this section by determining your U.S.-directed production volume of equipment with Class II engines from January 1, 2007

through December 31, 2009, calculating your annual average production for this period, and multiplying the average value by 0.3. The same calculation applies for small-volume equipment manufacturers, except that average annual production is multiplied by 2.0. For companies with no eligible production in a given year, calculate annual average production based only on those years in which you produce equipment during the specified period with Class II engines for sale in the United States. Use these allowances for equipment using model year 2011 and later Class II engines. You may use these allowances for equipment you produce before December 31, 2014.

(c) *Access to exempted engines.* You may use one of the following approaches to get exempted engines under this section:

(1) Request a certain number of exempted Class II engines from the engine manufacturer as described in paragraph (j)(1) of this section.

(2) You may make arrangements with the engine manufacturer to receive an engine without an exhaust system and install exhaust systems without aftertreatment that would otherwise be required to meet Phase 3 standards, as described in paragraph (j)(2) of this section. You must follow the engine manufacturer's instructions for installing noncatalyzed mufflers. You must keep records to show which engines you modify as described in this paragraph (c)(2) and make them available to the engine manufacturer for any auditing under the provisions of § 1054.610. If you do not place the label we specify in paragraph (f) of this section adjacent to the engine manufacturer's emission control information label, you must place an additional permanent label as close as possible to the engine's emission control information label where it will be readily visible in the final installation with at least the following items:

(i) Your corporate name and trademark.

(ii) The following statement: ''THIS ENGINE MEETS PHASE 2 STANDARDS UNDER § 1054.625(c)(2).''

(d) *Inclusion of engines not subject to Phase 3 standards.* The following provisions apply to engines that are not subject to Phase 3 standards:

(1) If you use the provisions of 40 CFR 1068.105(a) to use up your inventories of engines not certified to new emission standards, do not include these units in your count of equipment with exempted engines under paragraph (g)(2) of this section.

(2) If you install engines that are exempted from the Phase 3 standards for any reason, other than for equipment-manufacturer allowances under this section, do not include these units in your count of equipment with exempted engines under paragraph (g)(2) of this section. For example, if we grant a hardship exemption for the engine manufacturer, you may count these as compliant engines under this section. This paragraph (d)(2) applies only if the engine has a permanent label describing why it is exempted from the Phase 3 standards.

(e) *Standards.* If you produce equipment with exempted engines under this section, the engines must meet the Phase 2 emission standards specified in 40 CFR part 90. Any equipment using exempted engines under this section is also exempt from the running loss standard specified in § 1054.112.

(f) *Equipment labeling.* You must add a permanent label, written legibly in English, to the engine or another readily visible part of each piece of equipment with exempted engines you produce under this section. This label, which supplements the engine manufacturer's emission control information label, must include at least the following items:

(1) The label heading ''EMISSION CONTROL INFORMATION''.

(2) Your corporate name and trademark.

(3) The calendar year in which the equipment is manufactured.

(4) An e-mail address and phone number to contact for further information, or a Web site that includes this contact information.

(5) The following statement: THIS EQUIPMENT [or identify the type of equipment] HAS AN ENGINE THAT MEETS U.S. EPA EMISSION STANDARDS UNDER 40 CFR 1054.625.

(g) *Notification and reporting.* You must notify us of your intent to

produce equipment under the provisions of this section and send us an annual report to verify that you are not exceeding the production limits for equipment with exempted engines, as follows:

(1) Send the Designated Compliance Officer a written notice of your intent before you use the provisions of this section including all the following:

(i) Your company's name and address, and your parent company's name and address, if applicable. Also identify the names of any other companies operating under the same parent company.

(ii) The name, phone number and e-mail address of a person to contact for more information.

(iii) The calendar years in which you expect to use the exemption provisions of this section.

(iv) The name and address of each company you expect to produce engines for the equipment you manufacture under this section.

(v) How many pieces of equipment with exempted engines you may sell under this section, as described in paragraph (b) of this section. Include your production figures for the period from January 1, 2007 through December 31, 2009, including figures broken down by equipment model and calendar year. You may send corrected figures with lower production volumes anytime after your initial notification. To make a correction for higher production volumes, send us the corrected figures by September 30, 2010. We may ask you to give us additional information to confirm your production figures.

(2) For each year that you use the provisions of this section, send the Designated Compliance Officer a written report by March 31 of the following year. Identify the following things in your report:

(i) The total count of equipment with exempted engines you sold in the preceding year, based on actual U.S.-directed production information. If you produce equipment in the 2010 calendar year with exempted engines from the 2011 model year, include these units in your March 31, 2012 report.

(ii) Cumulative figures describing how many pieces of equipment with exempted engines you have produced for all the years you used the provisions of this section.

(iii) The manufacturer of the engine installed in the equipment you produce under this section, if this is different than you specified under paragraph (g)(1)(iv) of this section.

(3) If you send your initial notification under paragraph (g)(1) of this section after the specified deadline, we may approve your use of allowances under this section. In your request, describe why you were unable to meet the deadline.

(h) *Recordkeeping*. Keep the following records of all equipment with exempted engines you produce under this section until at least December 31, 2019:

(1) The model number for each piece of equipment.

(2) Detailed figures for determining how many pieces of equipment with exempted engines you may produce under this section, as described in paragraph (b) of this section.

(3) The notifications and reports we require under paragraph (g) of this section.

(i) *Enforcement*. Producing more exempted engines or equipment than we allow under this section or installing engines that do not meet the emission standards of paragraph (e) of this section violates the prohibitions in 40 CFR 1068.101(a)(1). You must give us the records we require under this section if we ask for them (see 40 CFR 1068.101(a)(2)).

(j) *Provisions for engine manufacturers*. As an engine manufacturer, use one of the following approaches to produce exempted engines under this section:

(1) The provisions of this paragraph (j)(1) apply if you do not use the delegated-assembly provisions of § 1054.610 for any of the engines in an engine family. You must have written assurance from equipment manufacturers or your authorized distributors that they need a certain number of exempted engines under this section. Keep these records for at least five years after you stop producing engines under this section. You must also send us an annual report of the engines you produce under this section, as described under § 1054.250(a). The engines must meet the emission standards in paragraph (e) of this section and you must meet all the

requirements of 40 CFR 1068.265. You must meet the labeling requirements in 40 CFR 90.114, but add the following statement instead of the compliance statement in 40 CFR 90.114(b)(7): THIS ENGINE MEETS U.S. EPA EMISSION STANDARDS UNDER 40 CFR 1054.625 AND MUST BE USED ONLY UNDER THOSE FLEXIBILITY PROVISIONS.

(2) The following provisions apply if you notify us that you plan to use the delegated-assembly provisions of §1054.610 for one or more equipment manufacturers for an engine family:

(i) Include test data in your application for certification showing that your engines will meet the standards specified in paragraph (e) of this section if they have a noncatalyzed muffler in place of the aftertreatment that is part of the certified configuration. Use good engineering judgment for these measurements, which may involve sampling exhaust upstream of the catalyst or operating the engine with a noncatalyzed muffler. This may be based on emission measurements from previous model years if the data is still appropriate for the current engine configuration.

(ii) Produce all your engines with the emission control information label we specify in §1054.135. The engines must also be labeled as specified in 40 CFR 1068.261.

(iii) Include in the installation instructions required under §1054.610 any appropriate instructions or limitations on installing noncatalyzed mufflers to ensure that the fully assembled engine will meet the emission standards specified in paragraph (e) of this section. You may identify an appropriate range of backpressures, but this may not involve any instructions related to changing the fuel system for different fueling rates.

(iv) Use one of the following approaches to properly account for emission credits if your engine family generates exhaust emission credits under subpart H of this part:

(A) Multiply the credits calculated under §1054.705 by 0.9. This is based on the expectation that equipment manufacturers will modify 10 percent of the engines to no longer meet Phase 3 standards.

(B) Include in your emission-credit calculations only those engines for which you can establish that the equipment manufacturer did not use the provisions of this section. This would involve an evaluation for each affected equipment manufacturer. For example, under this provision you may count emission credits for engines that you sell to equipment manufacturers with which you have no contract for delegated assembly. You may also count emission credits for engines that you sell to equipment manufacturers with which you have a delegated-assembly relationship if you confirm that the equipment manufacturer did not use the provisions of this section for those engines.

(k) *Additional exemptions for mid-sized companies.* If your annual production of equipment with Class II engines in 2007, 2008, and 2009 is between 5,000 and 50,000 units, you may request additional engine allowances under this section. To do this, notify us by January 31, 2010 if you believe the provisions of this section will not allow you to sell certain equipment models starting in the 2011 model year. In your notification, show us that you will be able to produce a number of Class II equipment models representing at least half your total U.S.-directed production volume in the 2011 model year that will be compliant with all Phase 3 exhaust and evaporative emission standards. Also describe why you need more allowances under this section to accommodate anticipated changes in engine designs resulting from engine manufacturers' compliance with changing exhaust emission standards. Include a proposal for the number of additional allowances you would need, with supporting rationale. We may approve allowances up to a total of 100 percent of the average annual U.S.-directed production volume you report under paragraph (b) of this section (in place of the 30 percent that is otherwise allowed).

§1054.626 What special provisions apply to equipment imported under the Transition Program for Equipment Manufacturers?

This section describes requirements that apply to equipment manufacturers using the provisions of §1054.625 for

equipment produced outside the United States. Note that § 1054.625 limits these provisions to equipment manufacturers that install some engines and have primary responsibility for designing and manufacturing equipment. Companies that import equipment into the United States without meeting these criteria are not eligible for allowances under § 1054.625. Such importers may import equipment with exempted engines only as described in paragraph (b) of this section.

(a) You or someone else may import your equipment with exempted engines under this section if you comply with the provisions in § 1054.625 and commit to the following:

(1) Give any EPA inspector or auditor complete and immediate access to inspect and audit, as follows:

(i) Inspections and audits may be announced or unannounced.

(ii) Inspections and audits may be performed by EPA employees or EPA contractors.

(iii) You must provide access to any location where—

(A) Any nonroad engine, equipment, or vehicle is produced or stored.

(B) Documents related to manufacturer operations are kept.

(C) Equipment, engines, or vehicles are tested or stored for testing.

(iv) You must provide any documents requested by an EPA inspector or auditor that are related to matters covered by the inspections or audit.

(v) EPA inspections and audits may include review and copying of any documents related to demonstrating compliance with the exemptions in § 1054.625.

(vi) EPA inspections and audits may include inspection and evaluation of complete or incomplete equipment, engines, or vehicles, and interviewing employees.

(vii) You must make any of your employees available for interview by the EPA inspector or auditor, on request, within a reasonable time period.

(viii) You must provide English language translations of any documents to an EPA inspector or auditor, on request, within 10 working days.

(ix) You must provide English-language interpreters to accompany EPA inspectors and auditors, on request.

(2) Name an agent for service located in the United States. Service on this agent constitutes service on you or any of your officers or employees for any action by EPA or otherwise by the United States related to the requirements of this part.

(3) The forum for any civil or criminal enforcement action related to the provisions of this section for violations of the Clean Air Act or regulations promulgated thereunder shall be governed by the Clean Air Act.

(4) The substantive and procedural laws of the United States shall apply to any civil or criminal enforcement action against you or any of your officers or employees related to the provisions of this section.

(5) Provide the notification required by § 1054.625(g). Include in the notice of intent in § 1054.625(g)(1) a commitment to comply with the requirements and obligations of § 1054.625 and this section. This commitment must be signed by the owner or president.

(6) You, your agents, officers, and employees must not seek to detain or to impose civil or criminal remedies against EPA inspectors or auditors, whether EPA employees or EPA contractors, for actions performed within the scope of EPA employment related to the provisions of this section.

(7) By submitting notification of your intent to use the provisions of § 1054.625, producing and exporting for resale to the United States nonroad equipment under this section, or taking other actions to comply with the requirements of this part, you, your agents, officers, and employees, without exception, become subject to the full operation of the administrative and judicial enforcement powers and provisions of the United States as described in 28 U.S.C. 1605(a)(2), without limitation based on sovereign immunity, for conduct that violates the requirements applicable to you under this part 1054—including such conduct that violates 18 U.S.C. 1001, 42 U.S.C. 7413(c)(2), or other applicable provisions of the Clean Air Act—with respect to actions instituted against you and your agents, officers, and employees in any court or other tribunal in the United States.

(8) Any report or other document you submit to us must be in the English language or include a complete translation in English.

(9) You may be required to post a bond to cover any potential enforcement actions under the Clean Air Act before you or anyone else imports your equipment with exempted engines under this section, as specified in § 1054.690. Use the bond amount specified in § 1054.690 without adjusting for inflation. Note that you may post a single bond to meet the requirements of this section and § 1054.690 together.

(b) The provisions of this paragraph (b) apply to importers that do not install engines into equipment and do not have primary responsibility for designing and manufacturing equipment. Such importers may import equipment with engines exempted under § 1054.625 only if each engine is exempted under an allowance provided to an equipment manufacturer meeting the requirements of § 1054.625 and this section. You must notify us of your intent to use the provisions of this section and send us an annual report, as follows:

(1) Notify the Designated Compliance Officer in writing before you use the provisions of § 1054.625. Include the following information:

(i) Your company's name and address, and your parent company's name and address, if applicable.

(ii) The name and address of the companies that produce the equipment and engines you will be importing under this section.

(iii) Your best estimate of the number of units you will import under this section in the upcoming calendar year, broken down by equipment manufacturer.

(2) For each year that you use the provisions of this section, send the Designated Compliance Officer a written report by March 31 of the following year. Include in your report the total number of engines you imported under this section in the preceding calendar year, broken down by engine manufacturer and by equipment manufacturer.

§ 1054.630 What provisions apply for importation of individual items for personal use?

(a) Any individual may import previously used nonconforming engines for purposes other than resale, but no more than once in any five-year period. This may include up to three nonconforming engines imported at the same time. To import engines under this section, provide to the Customs official the following information:

(1) Identify your name, address, and telephone number.

(2) If you are importing engines under this section on behalf of another person, identify the ultimate engine owner's name, address, and telephone number.

(3) Identify the total number of engines you are importing and specify the make, model, identification number, and original production year of each engine.

(4) State: ''I am importing these previously used engines for personal use. I have not imported any engines under the provisions of 40 CFR 1054.630 within the previous five years. I am not importing these engines for purpose of resale. I authorize EPA enforcement officers to inspect my engines and my facilities as permitted by the Clean Air Act.''

(b) We may require you to send us additional information but you do not need written approval from us to import engines under this section. We will also not require a U.S. Customs Service bond for engines you import under this section.

(c) The provisions of this section may not be used to circumvent emission standards that apply to new engines under this part. For example, you may not purchase new engines and use them in a trivial manner outside of the United States to qualify for importation under this section.

(d) If you violate the provisions of this section, or submit false information to obtain this exemption, you will be subject to civil penalties as specified in 40 CFR 1068.101(a)(2) and (b)(5).

§ 1054.635 What special provisions apply for small-volume engine and equipment manufacturers?

This section describes how we apply the special provisions in this part for small-volume engine and equipment manufacturers.

(a) If you qualify under paragraph (1) or (2) of the definition of small-volume engine manufacturer or under paragraph (1) or (2) of the definition of small-volume equipment manufacturer in § 1054.801, the small-volume provisions apply as specified in this part.

(b) If you are a small business (as defined by the Small Business Administration at 13 CFR 121.201) that manufactures nonroad spark-ignition engines or equipment, but you do not qualify under paragraph (1) or (2) of the definition of small-volume engine manufacturer or under paragraph (1) or (2) of the definition of small-volume equipment manufacturer in § 1054.801, you may ask us to designate you to be a small-volume engine or equipment manufacturer. You may do this whether you began manufacturing engines before, during, or after 2007. We may set other reasonable conditions that are consistent with the intent of this section and the Clean Air Act.

(c) Special provisions apply for small-volume engine and equipment manufacturers, as illustrated by the following examples:

(1) Additional lead time and other provisions related to the transition to new emission standards. See § 1054.145.

(2) More flexible arrangements for creating engine families. See § 1054.230.

(3) Assigned deterioration factors. See § 1054.240.

(4) Waived requirements for production-line testing. See § 1054.301.

(5) Streamlined certification provisions for equipment manufacturers relying on engine manufacturer's design parameters. See § 1054.612.

(6) Additional allowances under the Transition Program for Equipment Manufacturers. See § 1054.625.

(7) Additional special provisions apply for small-volume engine and equipment manufacturers under 40 CFR part 1068. For example, see 40 CFR 1068.250.

(d) Small-volume engine and equipment manufacturers may ask us to waive or modify the requirements of § 1054.690 if this would cause a serious economic hardship, as long as you demonstrate to us in some other way that you will meet any potential compliance-or enforcement-related obligations. In evaluating such a request, we would consider the extent to which there is a risk of noncompliance or nonconformity and the extent to which the manufacturer could be expected to fulfill future regulatory obligations and administrative judgments. We may also consider how many years the manufacturer has certified engines without a violation or a finding of noncompliance to determine whether to adjust applicable asset thresholds or to reduce the minimum bond value. We may set other reasonable conditions to ensure that the manufacturer will meet applicable requirements.

(e) If you use any of the provisions of this part that apply specifically to small-volume manufacturers and we find that you exceed the production limits or otherwise do not qualify as a small-volume manufacturer, we may consider you to be in violation of the requirements that apply for companies that are not small-volume manufacturers for those engines produced in excess of the specified production limits. If you no longer qualify as a small-volume engine manufacturer (based on increased production volumes or other factors), we will work with you to determine a reasonable schedule for complying with additional requirements that apply. For example, if you no longer qualify as a small-volume engine manufacturer shortly before you certify your engines for the next model year, we might allow you to use assigned deterioration factors for one more model year.

§ 1054.640 What special provisions apply to branded engines?

The following provisions apply if you identify the name and trademark of another company instead of your own on your emission control information label, as provided by § 1054.135(c)(2):

(a) You must have a contractual agreement with the other company that obligates that company to take the following steps:

(1) Meet the emission warranty requirements that apply under § 1054.120. This may involve a separate agreement involving reimbursement of warranty-related expenses.

(2) Report all warranty-related information to the certificate holder.

(b) In your application for certification, identify the company whose trademark you will use.

(c) You remain responsible for meeting all the requirements of this chapter, including warranty and defect-reporting provisions.

§ 1054.645 What special provisions apply for converting an engine to use an alternate fuel?

A certificate of conformity is no longer valid for an engine if the engine is modified such that it is not in a configuration covered by the certificate. This section applies if such modifications are done to convert the engine to run on a different fuel type. Such engines may need to be recertified as specified in this section if the certificate is no longer valid for that engine.

(a) Converting a certified new engine to run on a different fuel type violates 40 CFR 1068.101(a)(1) if the modified engine is not covered by a certificate of conformity.

(b) Converting a certified engine that is not new to run on a different fuel type violates 40 CFR 1068.101(b)(1) if the modified engine is not covered by a certificate of conformity. We may specify alternate certification provisions consistent with the requirements of this part. For example, you may certify the modified engine for a partial useful life. For example, if the engine is modified halfway through its original useful life period, you may generally certify the engine based on completing the original useful life period; or if the engine is modified after the original useful life period is past, you may generally certify the engine based on testing that does not involve further durability demonstration.

(c) Engines may be certified using the certification procedures for new engines as specified in this part or using the certification procedures for aftermarket parts as specified in 40 CFR part 85, subpart V. Unless the original engine manufacturer continues to be responsible for the engine as specified in paragraph (d) of this section, you must remove the original engine manufacturer's emission control information label if you recertify the engine.

(d) The original engine manufacturer is not responsible for operation of modified engines in configurations resulting from modifications performed by others. In cases where the modification allows an engine to be operated in either its original configuration or a modified configuration, the original engine manufacturer remains responsible for operation of the modified engine in its original configuration.

(e) Entities producing conversion kits may obtain certificates of conformity for the converted engines. Such entities are engine manufacturers for purposes of this part.

§ 1054.650 What special provisions apply for adding or changing governors?

The special provisions in this section apply for engines that will not be governed to control engine speeds consistent with the constant-speed operation reflected by the duty cycles specified in § 1054.505. We refer to these as constant-speed governors in this section. Paragraph (a) of this section also applies for any engines shipped without installed governors.

(a) The representative-testing requirements of 40 CFR 1065.10(c)(1) related to in-use duty cycles do not apply to engines you produce and ship without constant-speed governors if you comply with all the following requirements:

(1) You must have test data showing that the effectiveness of the engine's emission controls over the expected range of in-use operation will be similar to that measured over the specified duty cycle. Alternatively, if your emission controls depend on maintaining a consistent air-fuel ratio, you may demonstrate that the engine is calibrated to maintain a consistent air-fuel ratio over the expected range of in-use operation.

(2) Describe in your application for certification the data and analysis that supports your conclusion.

(b) It is a violation of the tampering provisions in 40 CFR 1068.101(b)(1) to remove a governor from a certified engine unless you recertify the engine in the modified configuration.

§ 1054.655 What special provisions apply for installing and removing altitude kits?

An action for the purpose of installing or modifying altitude kits and performing other changes to compensate for changing altitude is not considered a prohibited act under 40 CFR 1068.101(b) as long as as it is done consistent with the manufacturer's instructions.

§ 1054.660 What are the provisions for exempting emergency rescue equipment?

The provisions of this section apply for new equipment built on or after January 1, 2010.

(a) Equipment manufacturers may introduce into U.S. commerce equipment that is not certified to current emission standards under the following conditions if the equipment will be used solely in emergency rescue situations:

(1) You must determine annually that no engines certified to current emission standards are available to power the equipment safely and practically. We may review your records supporting this determination at any time.

(2) You may not use exempted engines for the following equipment used to provide remote power to a rescue tool: generators, alternators, compressors, or pumps.

(3) If engines that meet less stringent emission standards are capable of powering your equipment safely and practically, you must use them as a condition of this exemption. You must use available engines meeting the most stringent standards feasible.

(4) You must send the engine manufacturer a written request for each exempted equipment model.

(5) You must notify the Designated Compliance Officer of your intent to use the provisions of this section. We may require you to notify us annually or to send us annual reports describing how you meet the conditions of this section.

(b) For the purposes of this section, ''emergency rescue situations'' means firefighting or other situations in which a person is retrieved from imminent danger.

(c) As an engine manufacturer, you may produce exempt engines under this section without our prior approval if you have a written request for an exempted engine for use in emergency rescue equipment from the equipment manufacturer. You must permanently label engines with the following statement: ''EMERGENCY RESCUE EQUIPMENT—EXEMPT FROM EMISSION STANDARDS UNDER 40 CFR 1054.660.'' Failure to properly label an engine will void the exemption.

(d) We may discontinue an exemption under this section if we find that engines are not used solely for emergency rescue equipment or if we find that a certified engine is available to power the equipment safely and practically.

§ 1054.690 What bond requirements apply for certified engines?

(a) Before introducing certified engines into U.S. commerce, you must post a bond to cover any potential compliance or enforcement actions under the Clean Air Act unless you demonstrate to us in your application for certification that you are able to meet any potential compliance- or enforcement-related obligations, as described in this section. See paragraph (j) of this section for the requirements related to importing engines that have been certified by someone else. Note that you might also post bond under this section to meet your obligations under § 1054.120.

(b) The bonding requirements apply if you do not have long-term assets in the United States meeting any of the following thresholds:

(1) A threshold of $3 million applies if you have been a certificate holder in each of the preceding ten years without failing a test conducted by EPA officials or having been found by EPA to be noncompliant under applicable regulations.

(2) A threshold of $6 million applies if you are a secondary engine manufacturer.

(3) A threshold of $10 million applies if you do not qualify for the smaller bond thresholds in paragraph (b)(1) or (2) of this section.

(c) For the purpose of establishing your level of long-term assets under paragraph (b) of this section, include the values from your most recent balance sheet for buildings, land, and fixed equipment, but subtract depreciation and related long-term liabilities (such as a mortgage). If you have sufficient long-term assets to avoid bond payments under this section, you must identify the location of these assets in your application for certification.

(d) The minimum value of the bond is $500,000. A higher bond value may apply based on the per-engine bond values shown in Table 1 to this section and on the U.S.-directed production volume from each displacement grouping for the calendar model year. For example, if you have projected U.S.-directed production volumes of 10,000 engines with 180 cc displacement and 10,000 engines with 400 cc displacement in 2013, the appropriate bond amount is $750,000. Adjust the value of the bond as follows:

(1) If your estimated or actual U.S.-directed production volume in any later year increases beyond the level appropriate for your current bond payment, you must post additional bond to reflect the increased volume within 90 days after you change your estimate or determine the actual production volume. You may not decrease your bond.

(2) If you sell engines without aftertreatment components under the provisions of §1054.610, you must increase the per-engine bond values for the current year by 20 percent.

TABLE 1 TO §1054.690—PER-ENGINE BOND VALUES

For engines with displacement falling in the following ranges . . .	The per-engine bond value is . . .
Disp. < 225 cc	$25
225 ≤ Disp. < 740 cc	50
740 ≤ Disp. ≤ 1,000 cc	100
Disp. > 1,000 cc	200

(e) The threshold identified in paragraph (b) of this section and the bond values identified in paragraph (d) of this section are in 2008 dollars. Adjust these values in 2010 and later calendar years by comparing the Consumer Price Index values published by the Bureau of Labor Statistics for the preceding June and June 2008 (see *ftp://ftp.bls.gov/pub/special.requests/cpi/cpiai.txt*). Round calculated values for the thresholds and for total bond obligations to the nearest thousand dollars.

(f) You may meet the bond requirements of this section by obtaining a bond from a third-party surety that is cited in the U.S. Department of Treasury Circular 570, ''Companies Holding Certificates of Authority as Acceptable Sureties on Federal Bonds and as Acceptable Reinsuring Companies'' (*http://www.fms.treas.gov/c570/c570.html#certified*). You must maintain this bond for every year in which you sell certified engines. The surety agent remains responsible for obligations under the bond for two years after the bond is cancelled or expires without being replaced.

(g) If you forfeit some or all of your bond in an enforcement action, you must post any appropriate bond for continuing sale within 90 days after you forfeit the bond amount.

(h) You will forfeit the proceeds of the bond posted under this section if you need to satisfy any United States administrative settlement agreement, administrative final order, or judicial judgment against you arising from your violation of this chapter, or violation of 18 U.S.C. 1001, 42 U.S.C. 7413(c)(2), or other applicable provisions of the Clean Air Act.

(i) If you are required to post a bond under this section, you must note that in your application for certification as described in §1054.205. Your certification is conditioned on your compliance with this section. Your certificate is automatically suspended if you fail to comply with the requirements of this section. We may also revoke your certificate.

(j) The following provisions apply if you import engines for resale when those engines have been certified by someone else (or equipment containing such engines):

(1) You and the certificate holder are each responsible for compliance with the requirements of this part and the

Clean Air Act. For example, we may require you to comply with the warranty requirements in § 1054.120.

(2) You do not need to post bond if you or the certificate holder complies with the bond requirements of this section. You also do not need to post bond if the certificate holder complies with the asset requirements of this section and the repair-network provisions of § 1054.120(f)(4).

[73 FR 59259, Oct. 8, 2008, as amended at 74 FR 8426, Feb. 24, 2009; 75 FR 23025, Apr. 30, 2010]

Subpart H—Averaging, Banking, and Trading for Certification

§ 1054.701 General provisions.

(a) You may average, bank, and trade (ABT) emission credits for purposes of certification as described in this subpart to show compliance with the standards of this part. This applies for engines with respect to exhaust emissions and for equipment with respect to evaporative emissions. Participation in this program is voluntary.

(b) The definitions of subpart I of this part apply to this subpart. The following definitions also apply:

(1) *Actual emission credits* means emission credits you have generated that we have verified by reviewing your final report.

(2) *Averaging set* means a set of engines (or equipment) in which emission credits may be exchanged only with other engines (or equipment) in the same averaging set.

(3) *Broker* means any entity that facilitates a trade of emission credits between a buyer and seller.

(4) *Buyer* means the entity that receives emission credits as a result of a trade.

(5) *Family* means engine family for exhaust credits or emission family for evaporative credits.

(6) *Reserved emission credits* means emission credits you have generated that we have not yet verified by reviewing your final report.

(7) *Seller* means the entity that provides emission credits during a trade.

(8) *Standard* means the emission standard that applies under subpart B of this part for engines or fuel-system components not participating in the ABT program of this subpart.

(9) *Trade* means to exchange emission credits, either as a buyer or seller.

(c) The use of emission credits is limited to averaging sets, as follows:

(1) You may not average or exchange exhaust credits with evaporative credits, or vice versa.

(2) Handheld engines and nonhandheld engines are in separate averaging sets with respect to exhaust emissions except as specified in § 1054.740(e). You may use emission credits generated under 40 CFR part 90 for handheld engines subject to the standards in § 1054.103 only if you can demonstrate that those credits were generated by handheld engines, except as specified in § 1054.740(e). You may use emission credits generated under 40 CFR part 90 for nonhandheld engines only if you can demonstrate that those credits were generated by nonhandheld engines, subject to the provisions of § 1054.740.

(3) Equipment using handheld engines and equipment using nonhandheld engines are in separate averaging sets with respect to evaporative emissions. You may not average or exchange evaporative credits between either of these averaging sets.

(4) For purposes of calculating emission credits under this subpart, engines with displacement at or below 80 cc are presumed to be handheld engines. You may treat these as nonhandheld engines for calculating exhaust or evaporative emission credits only for those engines you can demonstrate will be installed in nonhandheld equipment. For example, if 50 percent of engines in a family will be used in nonhandheld equipment, you may calculate the emission credits for 50 percent of the engines to be nonhandheld credits. Use the specified calculation methods for handheld engines to quantify positive or negative exhaust emission credits for all engines at or below 80 cc.

(d) You may not generate evaporative credits based on permeation measurements from metal fuel tanks.

(e) You may not use emission credits generated under this subpart to offset any emissions that exceed an FEL or standard. This applies for all testing, including certification testing, in-use testing, selective enforcement audits,

and other production-line testing. However, if exhaust emissions from an engine exceed an exhaust FEL or standard (for example, during a selective enforcement audit), you may use emission credits to recertify the family with a higher FEL that applies only to future production.

(f) Emission credits may be used in the model year they are generated (averaging) and in future model years (banking). Emission credits may not be used for past model years.

(g) You may increase or decrease an exhaust FEL during the model year by amending your application for certification under §1054.225. See 40 CFR 1060.225 for provisions related to changing an FEL for fuel tank permeation.

(h) Engine and equipment manufacturers certifying with respect to evaporative emissions may use emission credits to demonstrate compliance under this subpart. Component manufacturers may establish FELs for their certified products, but they may not generate or use emission credits under this subpart.

(i) In your application for certification, base your showing of compliance on projected production volumes for engines or equipment intended for sale in the United States. As described in §1054.730, compliance with the requirements of this subpart is determined at the end of the model year based on actual production volumes for engines or equipment intended for sale in the United States. Do not include any of the following engines or equipment to calculate emission credits:

(1) Engines or equipment exempted under subpart G of this part or under 40 CFR part 1068.

(2) Engines or equipment intended for export.

(3) Engines or equipment that are subject to state emission standards for that model year. However, this restriction does not apply if we determine that the state standards and requirements are equivalent to those of this part and that products sold in such a state will not generate credits under the state program. For example, you may not include engines or equipment certified for California if California has more stringent emission standards for these products or if your products generate or use emission credits under the California program.

(4) Engines or equipment not subject to the requirements of this part, such as those excluded under §1054.5.

(5) Any other engines or equipment where we indicate elsewhere in this part 1054 that they are not to be included in the calculations of this subpart.

§1054.705 How do I generate and calculate exhaust emission credits?

The provisions of this section apply for calculating exhaust emission credits. You may generate exhaust emission credits only if you are a certifying engine manufacturer.

(a) For each participating family, calculate positive or negative emission credits relative to the otherwise applicable emission standard. Calculate positive emission credits for a family that has an FEL below the standard. Calculate negative emission credits for a family that has an FEL above the standard. Sum your positive and negative credits for the model year before rounding. Round the sum of emission credits to the nearest kilogram (kg) using consistent units throughout the following equation:

$$\text{Emission credits (kg)} = (\text{STD} - \text{FEL}) \times (\text{Volume}) \times (\text{Power}) \times (\text{UL}) \times (\text{LF}) \times (10^{-3})$$

Where:

STD = the emission standard, in g/kW-hr.

FEL = the family emission limit for the family, in g/kW-hr.

Volume = the number of engines eligible to participate in the averaging, banking, and trading program within the given family during the model year, as described in §1054.701(i).

Power = the maximum modal power of the emission-data engine as calculated from the applicable test procedure described in subpart F of this part, in kilowatts.

UL = the useful life for the given family, in hours.

LF = load factor. Use 0.47 for nonhandheld engines and 0.85 for handheld engines. We may specify a different load factor if we approve the use of special test procedures for a family under 40 CFR 1065.10(c)(2), consistent with good engineering judgment.

(b) [Reserved]

§ 1054.706 How do I generate and calculate evaporative emission credits?

The provisions of this section apply for calculating evaporative emission credits related to fuel tank permeation. You may generate credits only if you are a certifying equipment manufacturer. This may include engine manufacturers that make engines with complete fuel systems as described in § 1054.2.

(a) For each participating family, calculate positive or negative emission credits relative to the otherwise applicable emission standard. Calculate positive emission credits for a family that has an FEL below the standard. Calculate negative emission credits for a family that has an FEL above the standard. Sum your positive and negative credits for the model year before rounding. Round the sum of emission credits to the nearest kilogram (kg) using consistent units throughout the following equation:

$$\text{Emission credits (kg)} = (\text{STD} - \text{FEL}) \times (\text{Total Area}) \times (\text{UL}) \times (\text{AF}) \times (365) \times (10^{-3})$$

Where:

STD = the emission standard, in g/m²/day.

FEL = the family emission limit for the family, in g/m²/day, as described in paragraph (b) of this section.

Total Area = The combined internal surface area of all fuel tanks in the family, taking production volume into account, in m².

UL = 5 years, which represents the useful life for the given family.

AF= adjustment factor. Use 1.0 for testing at 28 °C; use 0.60 for testing at 40 °C.

(b) For calculating credits under paragraph (a) of this section, the emission standard and FEL must both be based on test measurements at the same temperature (28° or 40°C). Determine the FEL for calculating emission credits relative to testing at 28°C as described in paragraphs (b)(1) and (2) of this section. Determine the FEL for calculating emission credits relative to testing at 40°C as described in paragraph (b)(3) of this section.

(1) To use an FEL below 5.0 g/m²/day, it must be based on emission measurements.

(2) The provisions of this paragraph (b)(2) apply for all emission families with FELs at or above 5.0 g/m²/day. To calculate emission credits for such emission families, you must choose from one of the following options and apply it to all your emission families with FELs at or above 5.0 g/m²/day:

(i) Option 1: Establish all your FELs based on emission measurements. This may include measurements from a certifying fuel tank manufacturer.

(ii) Option 2: Use an assigned FEL of 10.4 g/m²/day. This would apply without regard to whether any of these emission families have measured emission levels below 10.4 g/m²/day. If any of your fuel tanks were otherwise certified (by you or the fuel tank manufacturer) with an FEL at or above 5.0 g/m²/day, the assigned FEL of 10.4 g/m²/day applies only for emission credit calculations.

(3) Determine the FEL for calculating emission credits relative to testing at 40°C as described in paragraph (b)(1) and (2) of this section, but use 8.3 g/m²/day instead of 5.0 g/m²/day and use 17.3 g/m²/day instead of 10.4 g/m²/day.

§ 1054.710 How do I average emission credits?

(a) Averaging is the exchange of emission credits among your families. You may average emission credits only within the same averaging set.

(b) You may certify one or more families to an FEL above the emission standard, subject to the FEL caps and other provisions in subpart B of this part, if you show in your application for certification that your projected balance of all emission-credit transactions in that model year is greater than or equal to zero.

(c) If you certify a family to an FEL that exceeds the otherwise applicable standard, you must obtain enough emission credits to offset the family's deficit by the due date for the final report required in § 1054.730. The emission credits used to address the deficit may come from your other families that generate emission credits in the same model year, from emission credits you have banked, or from emission credits you obtain through trading.

§ 1054.715 How do I bank emission credits?

(a) Banking is the retention of emission credits by the manufacturer generating the emission credits for use in future model years for averaging or trading. You may use banked emission credits only within the averaging set in which they were generated, except as described in this subpart.

(b) You may designate any emission credits you plan to bank in the reports you submit under § 1054.730. During the model year and before the due date for the final report, you may designate your reserved emission credits for averaging or trading.

(c) Reserved credits become actual emission credits when you submit your final report. However, we may revoke these emission credits if we are unable to verify them after reviewing your reports or auditing your records.

§ 1054.720 How do I trade emission credits?

(a) Trading is the exchange of emission credits between manufacturers. You may use traded emission credits for averaging, banking, or further trading transactions. Traded emission credits may be used only within the averaging set in which they were generated, except as described in this subpart.

(b) You may trade actual emission credits as described in this subpart. You may also trade reserved emission credits, but we may revoke these emission credits based on our review of your records or reports or those of the company with which you traded emission credits. You may trade banked credits within an averaging set to any certifying engine or equipment manufacturer.

(c) If a negative emission credit balance results from a transaction, both the buyer and seller are liable, except in cases we deem to involve fraud. See § 1054.255(e) for cases involving fraud. We may void the certificates of all families participating in a trade that results in a manufacturer having a negative balance of emission credits. See § 1054.745.

§ 1054.725 What must I include in my application for certification?

(a) You must declare in your application for certification your intent to use the provisions of this subpart for each family that will be certified using the ABT program. You must also declare the FELs you select for the family for each pollutant for which you are using the ABT program. Your FELs must comply with the specifications of subpart B of this part, including the FEL caps. FELs must be expressed to the same number of decimal places as the emission standard.

(b) Include the following in your application for certification:

(1) A statement that, to the best of your belief, you will not have a negative balance of emission credits for any averaging set when all emission credits are calculated at the end of the year.

(2) Detailed calculations of projected emission credits (positive or negative) based on projected production volumes. We may require you to include similar calculations from your other engine families to demonstrate that you will be able to avoid a negative credit balance for the model year. If you project negative emission credits for a family, state the source of positive emission credits you expect to use to offset the negative emission credits.

§ 1054.730 What ABT reports must I send to EPA?

(a) If any of your families are certified using the ABT provisions of this subpart, you must send an end-of-year report within 90 days after the end of the model year and a final report within 270 days after the end of the model year. We may waive the requirement to send the end-of-year report as long as you send the final report on time.

(b) Your end-of-year and final reports must include the following information for each family participating in the ABT program:

(1) Family designation.

(2) The emission standards that would otherwise apply to the family.

(3) The FEL for each pollutant. If you change the FEL after the start of production, identify the date that you started using the new FEL and/or give the engine identification number for the first engine covered by the new

FEL. In this case, identify each applicable FEL and calculate the positive or negative emission credits under each FEL.

(4) The projected and actual U.S.-directed production volumes for the model year, as described in § 1054.701(i). For fuel tanks, state the production volume in terms of surface area and production volume for each fuel tank configuration and state the total surface area for the emission family. If you changed an FEL during the model year, identify the actual production volume associated with each FEL.

(5) The maximum modal power of the emission-data engine or the appropriate internal surface area of the fuel tank.

(6) Useful life.

(7) Calculated positive or negative emission credits for the whole family. Identify any emission credits that you traded, as described in paragraph (d)(1) of this section.

(c) Your end-of-year and final reports must include the following additional information:

(1) Show that your net balance of emission credits from all your participating families in each averaging set in the applicable model year is not negative.

(2) State whether you will retain any emission credits for banking.

(3) State that the report's contents are accurate.

(d) If you trade emission credits, you must send us a report within 90 days after the transaction, as follows:

(1) As the seller, you must include the following information in your report:

(i) The corporate names of the buyer and any brokers.

(ii) A copy of any contracts related to the trade.

(iii) The families that generated emission credits for the trade, including the number of emission credits from each family.

(2) As the buyer, you must include the following information in your report:

(i) The corporate names of the seller and any brokers.

(ii) A copy of any contracts related to the trade.

(iii) How you intend to use the emission credits, including the number of emission credits you intend to apply to each family (if known).

(e) Send your reports electronically to the Designated Compliance Officer using an approved information format. If you want to use a different format, send us a written request with justification for a waiver.

(f) Correct errors in your end-of-year report or final report as follows:

(1) You may correct any errors in your end-of-year report when you prepare the final report as long as you send us the final report by the time it is due.

(2) If you or we determine within 270 days after the end of the model year that errors mistakenly decreased your balance of emission credits, you may correct the errors and recalculate the balance of emission credits. You may not make these corrections for errors that are determined more than 270 days after the end of the model year. If you report a negative balance of emission credits, we may disallow corrections under this paragraph (f)(2).

(3) If you or we determine anytime that errors mistakenly increased your balance of emission credits, you must correct the errors and recalculate the balance of emission credits.

[73 FR 59259, Oct. 8, 2008, as amended at 75 FR 23026, Apr. 30, 2010]

§ 1054.735 What records must I keep?

(a) You must organize and maintain your records as described in this section. We may review your records at any time.

(b) Keep the records required by this section for at least eight years after the due date for the end-of-year report. You may not use emission credits for any engines or equipment if you do not keep all the records required under this section. You must therefore keep these records to continue to bank valid credits. Store these records in any format and on any media as long as you can promptly send us organized, written records in English if we ask for them. You must keep these records readily available. We may review them at any time.

(c) Keep a copy of the reports we require in § 1054.730.

(d) Keep records of the engine identification number for each engine or piece of equipment you produce that generates or uses emission credits under the ABT program. You may identify these numbers as a range. If you change the FEL after the start of production, identify the date you started using each FEL and the range of engine identification numbers associated with each FEL.

(e) We may require you to keep additional records or to send us relevant information not required by this section in accordance with the Clean Air Act.

§ 1054.740 What special provisions apply for generating and using emission credits?

(a) You may generate Phase 3 emission credits from 2008 through 2011 model year Class I engines if you voluntarily meet the Phase 3 exhaust emission standards specified in § 1054.105. Divide these into transitional and enduring emission credits as follows:

(1) Transitional credits are based on reducing emissions from Phase 2 levels down to Phase 3 levels. Calculate the value of transitional emission credits as described in § 1054.705, based on setting STD equal to 15.0 g/kW-hr and FEL equal to 10.0 g/kW-hr. You may use these transitional credits only for Class I engines in 2012 through 2014 model years. You may not use these transitional credits for Class II engines.

(2) Enduring credits are based on reducing emissions below Phase 3 levels. Calculate the value of enduring credits as described in § 1054.705, based on setting STD equal to 10.0 g/kW-hr and FEL to the value of the family emission limit you select for the family. You may use these enduring credits for any nonhandheld engines certified to the Phase 3 standards under this part, except as specified in paragraph (d) of this section.

(b) You may generate Phase 3 emission credits from 2008 through 2010 model year Class II engines if you voluntarily meet the Phase 3 exhaust emission standards specified in § 1054.105. Divide these into transitional and enduring emission credits as follows:

(1) Transitional credits are based on reducing emissions from Phase 2 levels down to Phase 3 levels. Calculate the value of transitional emission credits as described in § 1054.705, based on setting STD equal to 11.0 g/kW-hr and FEL equal to 8.0 g/kW-hr. You may use these transitional credits only for Class II engines in 2011 through 2013 model years. You may not use these transitional credits for Class I engines.

(2) Enduring credits are based on reducing emissions below Phase 3 levels. Calculate the value of enduring credits as described in § 1054.705, based on setting STD equal to 8.0 g/kW-hr and FEL to the value of the family emission limit you select for the family. You may use these enduring credits for any nonhandheld engines certified to the Phase 3 standards under this part, except as specified in paragraph (d) of this section.

(c) You may use emission credits generated by Class I and Class II engines subject to Phase 2 emission standards under 40 CFR part 90 to demonstrate compliance with the Phase 3 exhaust emission standards, but only after you have exhausted all transitional credits from engines meeting Phase 3 standards, subject to the conditions of paragraph (d) of this section. You may use these Phase 2 emission credits only in the 2012 and 2013 model years for Class I engines and only in the 2011 through 2013 model years for Class II engines. Determine a maximum number of Phase 2 emission credits for demonstrating compliance with the Phase 3 standards for a given engine class (Class I or Class II) as follows:

(1) Calculate a Phase 2 credit allowance for each engine class based on production information for model years 2007, 2008, and 2009 using the following equation:

$$\text{Credit allowance (kg)} = (\text{Emissions Delta}) \times (\text{Volume}) \times (\text{Avg. Power}) \times (\text{Avg. UL}) \times (\text{LF}) \times (10^{-3})$$

Where:

Emissions Delta = 1.6 g/kW-hr for Class I and 2.1 g/kW-hr for Class II.

Volume = the number of your engines eligible to participate in the averaging, banking, and trading program, as described in § 1054.701(i), based on actual U.S.-directed production volumes.

Avg. Power = the production-weighted average value of the maximum modal power for all your engine families in the engine class, as described in § 1054.705(a), in kilowatts.

Avg. UL = the production-weighted average value of the useful life for all your engine families in the engine class, in hours.

LF = load factor. Use 0.47.

(2) Do not include wintertime engines in the calculation of credit allowances unless they are certified to meet the otherwise applicable $HC+NO_X$ emission standard.

(3) Calculate the average annual Phase 2 credit allowance for each engine class over three model years as specified in paragraph (c)(1) of this section. The resulting average value is the maximum number of Phase 2 emission credits you may use under this paragraph (c) for each engine class.

(4) For 2013 and earlier model years, include in the reports described in § 1054.730 the total allowable number of Phase 2 emission credits and your cumulative totals of Phase 2 credits you have used to comply with the requirements of this part for each engine class.

(d) If you generate enduring emission credits from Class I engines under paragraph (a) of this section, you may not use these for Class II engines in the 2011 or 2012 model year. Similarly, if you generate enduring emission credits from Class II engines under paragraph (b) of this section, you may not use these for Class I engines in the 2012 model year. These restrictions also apply for emission credits you generate for engines subject to the standards of this part in the 2011 or 2012 model year.

(e) You may use Phase 2 or Phase 3 emission credits from nonhandheld engines to demonstrate compliance with the Phase 3 standards for handheld engines subject to the following restrictions:

(1) The handheld family must be certified in 2008 and all later model years using carryover of emission data from an engine family that was most recently certified with new emission data in 2007 or an earlier model year.

(2) The handheld family's FEL may not increase above the level selected for the 2007 model year in later years unless such an increase is based on emission data from production engines.

(3) Your total production of handheld engines certified under this paragraph (e) may not exceed 30,000 in any model year.

§ 1054.745 What can happen if I do not comply with the provisions of this subpart?

(a) For each family participating in the ABT program, the certificate of conformity is conditional upon full compliance with the provisions of this subpart during and after the model year. You are responsible to establish to our satisfaction that you fully comply with applicable requirements. We may void the certificate of conformity for a family if you fail to comply with any provisions of this subpart.

(b) You may certify your family to an FEL above an emission standard based on a projection that you will have enough emission credits to offset the deficit for the family. However, we may void the certificate of conformity if you cannot show in your final report that you have enough actual emission credits to offset a deficit for any pollutant in a family.

(c) We may void the certificate of conformity for a family if you fail to keep records, send reports, or give us information we request.

(d) You may ask for a hearing if we void your certificate under this section (see § 1054.820).

Subpart I—Definitions and Other Reference Information

§ 1054.801 What definitions apply to this part?

The following definitions apply to this part. The definitions apply to all subparts unless we note otherwise. All undefined terms have the meaning the Clean Air Act gives to them. The definitions follow:

Adjustable parameter means any device, system, or element of design that someone can adjust (including those which are difficult to access) and that, if adjusted, may affect emissions or engine performance during emission testing or normal in-use operation. This includes, but is not limited to, parameters related to injection timing and fueling rate. You may ask us to exclude a parameter that is difficult to

access if it cannot be adjusted to affect emissions without significantly degrading engine performance, or if you otherwise show us that it will not be adjusted in a way that affects emissions during in-use operation.

Aftertreatment means relating to a catalytic converter, particulate filter, thermal reactor, or any other system, component, or technology mounted downstream of the exhaust valve (or exhaust port) whose design function is to decrease emissions in the engine exhaust before it is exhausted to the environment. Exhaust-gas recirculation (EGR), turbochargers, and oxygen sensors are not aftertreatment.

Alcohol-fueled engine means an engine that is designed to run using an alcohol fuel. For purposes of this definition, alcohol fuels do not include fuels with a nominal alcohol content below 25 percent by volume.

Amphibious vehicle means a vehicle with wheels or tracks that is designed primarily for operation on land and secondarily for operation in water.

Applicable emission standard or *applicable standard* means an emission standard to which an engine (or equipment) is subject. Additionally, if an engine (or equipment) has been or is being certified to another standard or FEL, *applicable emission standard* means the FEL or other standard to which the engine (or equipment) has been or is being certified. This definition does not apply to subpart H of this part.

Auxiliary emission control device means any element of design that senses temperature, motive speed, engine RPM, transmission gear, or any other parameter for the purpose of activating, modulating, delaying, or deactivating the operation of any part of the emission control system.

Brake power means the usable power output of the engine, not including power required to fuel, lubricate, or heat the engine, circulate coolant to the engine, or to operate aftertreatment devices.

Calibration means the set of specifications and tolerances specific to a particular design, version, or application of a component or assembly capable of functionally describing its operation over its working range.

Carryover means relating to certification based on emission data generated from an earlier model year as described in § 1054.235(d).

Certification means relating to the process of obtaining a certificate of conformity for an emission family that complies with the emission standards and requirements in this part.

Certified emission level means the highest deteriorated emission level in an emission family for a given pollutant from either transient or steady-state testing.

Class I means relating to nonhandheld engines with total displacement below 225 cc. See § 1054.101 for special provisions that apply for engines with total displacement at or below 80 cc.

Class II means relating to nonhandheld engines with total displacement at or above 225 cc.

Class III means relating to handheld engines with total displacement below 20 cc.

Class IV means relating to handheld engines with total displacement at or above 20 cc but below 50 cc.

Class V means relating to handheld engines with total displacement at or above 50 cc.

Clean Air Act means the Clean Air Act, as amended, 42 U.S.C. 7401–7671q.

Cold-weather equipment is limited to the following types of handheld equipment: chainsaws, cut-off saws, clearing saws, brush cutters with engines at or above 40cc, commercial earth and wood drills, and ice augers. This includes earth augers if they are also marketed as ice augers.

Crankcase emissions means airborne substances emitted to the atmosphere from any part of the engine crankcase's ventilation or lubrication systems. The crankcase is the housing for the crankshaft and other related internal parts.

Critical emission-related component means any of the following components:

(1) Electronic control units, aftertreatment devices, fuel-metering components, EGR-system components, crankcase-ventilation valves, all components related to charge-air compression and cooling, air filters, spark

plugs, and all sensors and actuators associated with any of these components.

(2) Any other component whose primary purpose is to reduce emissions.

Date of manufacture has the meaning given in 40 CFR 1068.30.

Days means calendar days unless otherwise specified. For example, when we specify working days we mean calendar days, excluding weekends and U.S. national holidays.

Designated Compliance Officer means the Manager, Heavy-Duty and Nonroad Engine Group (6405–J), U.S. Environmental Protection Agency, 1200 Pennsylvania Ave., NW., Washington, DC 20460.

Designated Enforcement Officer means the Director, Air Enforcement Division (2242A), U.S. Environmental Protection Agency, 1200 Pennsylvania Ave., NW.,Washington, DC 20460.

Deteriorated emission level means the emission level that results from applying the appropriate deterioration factor to the official emission result of the emission-data engine.

Deterioration factor means the relationship between emissions at the end of useful life and emissions at the low-hour test point (see §§ 1054.240 and 1054.245), expressed in one of the following ways:

(1) For multiplicative deterioration factors, the ratio of emissions at the end of useful life to emissions at the low-hour test point.

(2) For additive deterioration factors, the difference between emissions at the end of useful life and emissions at the low-hour test point.

Discrete-mode means relating to the discrete-mode type of steady-state test described in § 1054.505.

Displacement has the meaning given in § 1054.140.

Dry weight means the weight of the equipment as sold without fuel, oil, or engine coolant.

Dual-fuel engine means an engine designed for operation on two different fuels but not on a continuous mixture of those fuels.

Emission control system means any device, system, or element of design that controls or reduces the emissions of regulated pollutants from an engine.

Emission-data engine means an engine that is tested for certification. This includes engines tested to establish deterioration factors.

Emission-data equipment means an engine, piece of equipment, or fuel system component that is tested for certification. This includes units tested to establish deterioration factors.

Emission family has the meaning given in § 1054.230. We may refer to emission families as ''engine families'' where provisions relate only to exhaust emissions from engines.

Emission-related maintenance means maintenance that substantially affects emissions or is likely to substantially affect emission deterioration.

Engine has the meaning given in 40 CFR 1068.30. This includes complete and partially complete engines.

Engine configuration means a unique combination of engine hardware and calibration within an emission family. Engines within a single engine configuration differ only with respect to normal production variability.

Engine manufacturer means the manufacturer of the engine. See the definition of ''manufacturer'' in this section.

Equipment means any mechanical device commonly known as equipment, including vehicles. If the equipment has an installed engine, the term *equipment* includes the installed engine and fuel system components.

Equipment manufacturer means a manufacturer of nonroad equipment. All nonroad equipment manufacturing entities under the control of the same person are considered to be a single nonroad equipment manufacturer. (Note: In § 1054.626, the term ''equipment manufacturer'' has a narrower meaning that applies only to that section.).

Evaporative means relating to fuel emissions controlled by 40 CFR part 1060. This generally includes emissions that result from permeation of fuel through the fuel-system materials or from ventilation of the fuel system.

Excluded means relating to an engine that either:

(1) Has been determined not to be a nonroad engine, as specified in 40 CFR 1068.30; or

(2) Is a nonroad engine that, according to § 1054.5, is not subject to this part 1054.

Exempted has the meaning given in 40 CFR 1068.30.

Exhaust-gas recirculation (EGR) means a technology that reduces emissions by routing exhaust gases that had been exhausted from the combustion chamber(s) back into the engine to be mixed with incoming air before or during combustion. The use of valve timing to increase the amount of residual exhaust gas in the combustion chamber(s) that is mixed with incoming air before or during combustion is not considered exhaust-gas recirculation for the purposes of this part.

Family emission limit (FEL) means an emission level declared by the manufacturer to serve in place of an otherwise applicable emission standard under the ABT program in subpart H of this part. The family emission limit must be expressed to the same number of decimal places as the emission standard it replaces. The family emission limit serves as the emission standard for the engine family (exhaust) or emission family (evaporative) with respect to all required testing.

Flexible-fuel engine means an engine designed for operation on any mixture of two or more different fuels.

Fuel line means hose or tubing designed to contain liquid fuel (including molded hose or tubing). This does not include any of the following:

(1) Fuel tank vent lines.

(2) Segments of hose or tubing whose external surface is normally exposed to liquid fuel inside the fuel tank.

(3) Hose or tubing designed to return unused fuel from the carburetor to the fuel tank for handheld engines.

(4) Primer bulbs that contain liquid fuel only for priming the engine before starting.

Fuel system means all components involved in transporting, metering, and mixing the fuel from the fuel tank to the combustion chamber(s), including the fuel tank, fuel tank cap, fuel pump, fuel filters, fuel lines, carburetor or fuel-injection components, and all fuel-system vents.

Fuel type means a general category of fuels such as gasoline or natural gas. There can be multiple grades within a single fuel type, such as low-temperature or all-season gasoline.

Good engineering judgment has the meaning given in 40 CFR 1068.30. See 40 CFR 1068.5 for the administrative process we use to evaluate good engineering judgment.

Handheld means relating to equipment that meets any of the following criteria:

(1) It is carried by the operator throughout the performance of its intended function.

(2) It is designed to operate multi-positionally, such as upside down or sideways, to complete its intended function.

(3) It has a combined engine and equipment dry weight under 16.0 kilograms, has no more than two wheels, and at least one of the following attributes is also present:

(i) The operator provides support or carries the equipment throughout the performance of its intended function. Carry means to completely bear the weight of the equipment, including the engine. Support means to hold a piece of equipment in position to prevent it from falling, slipping, or sinking, without carrying it.

(ii) The operator provides support or attitudinal control for the equipment throughout the performance of its intended function. Attitudinal control involves regulating the horizontal or vertical position of the equipment.

(4) It is an auger with a combined engine and equipment dry weight under 22.0 kilograms.

(5) It is used in a recreational application with a combined total vehicle dry weight under 20.0 kilograms. Note that snowmobiles, offroad motorcycles, and all-terrain vehicles are regulated under 40 CFR part 1051 and marine vessels are regulated under 40 CFR part 1045.

(6) It is a hand-supported jackhammer or rammer/compactor. This does not include equipment that can remain upright without operator support, such as a plate compactor.

Hydrocarbon (HC) means the hydrocarbon group on which the emission standards are based for each fuel type, as described in subpart B of this part.

Identification number means a unique specification (for example, a model number/serial number combination) that allows someone to distinguish a

particular engine from other similar engines.

Integrated equipment manufacturer means an equipment manufacturer that also manufactures the engines for its equipment. Equipment manufacturers that manufacture the engines for some but not all of their equipment are considered to be integrated manufacturers for that equipment using the manufacturer's own engines.

Intermediate-speed equipment means nonhandheld equipment in which the installed engine is intended for operation at speeds substantially below 3600 rpm.

Low-hour means relating to an engine that is considered to have stabilized emissions and represents the undeteriorated emission level. A low-hour engine typically operates no more than a few hours beyond the minimum stabilization period. However, a low-hour engine could have more hours as long as emissions remain stable. In the absence of other information, a low-hour engine with a useful life of 300 hours or less would generally have operated no more than 15 hours and a low-hour engine with a longer useful life would generally have operated no more than 24 hours.

Manufacture means the physical and engineering process of designing, constructing, and assembling an engine or piece of equipment.

Manufacturer has the meaning given in section 216(1) of the Clean Air Act (42 U.S.C. 7550(1)). In general, this term includes any person who manufactures an engine, vehicle, vessel, or piece of equipment for sale in the United States or otherwise introduces a new nonroad engine or piece of equipment into U.S. commerce. This includes importers who import engines, equipment, or vehicles for resale, but not dealers. All manufacturing entities under the control of the same person are considered to be a single manufacturer.

Marine engine means a nonroad engine that is installed or intended to be installed on a vessel. There are two kinds of marine engines:

(1) Propulsion marine engine means a marine engine that moves a vessel through the water or directs the vessel's movement.

(2) Auxiliary marine engine means a marine engine not used for propulsion. This includes a portable auxiliary marine engine only if its fueling, cooling, or exhaust system is an integral part of the vessel.

Marine generator engine means an auxiliary marine engine used primarily to operate an electrical generator or alternator to produce electric power.

Marine vessel has the meaning given in 1 U.S.C. 3, except that it does not include amphibious vehicles. The definition in 1 U.S.C. 3 very broadly includes every craft capable of being used as a means of transportation on water.

Maximum engine power has the meaning given in § 1054.140.

Maximum test torque has the meaning given in 40 CFR 1065.1001.

Model year has the meaning given in 40 CFR part 1060 for equipment and means one of the following things for engines:

(1) For freshly manufactured engines (see definition of ''new nonroad engine,'' paragraph (1)), model year means your annual new model production period. This must include January 1 of the calendar year for which the model year is named. It may not begin before January 2 of the previous calendar year and it must end by December 31 of the named calendar year. For seasonal production periods not including January 1, model year means the calendar year in which the production occurs, unless you choose to certify the applicable emission family with the following model year. For example, if your production period is June 1, 2010 through November 30, 2010, your model year would be 2010 unless you choose to certify the emission family for model year 2011.

(2) For an engine that is converted to a nonroad engine after being placed into service as a stationary engine, or being certified and placed into service as a motor vehicle engine, model year means the calendar year in which the engine was originally produced. For a motor vehicle engine that is converted to be a nonroad engine without having been certified, model year means the calendar year in which the engine becomes a new nonroad engine. (See definition of ''new nonroad engine,'' paragraph (2).)

(3) For a nonroad engine excluded under § 1054.5 that is later converted to operate in an application that is not excluded, model year means the calendar year in which the engine was originally produced (see definition of ''new nonroad engine,'' paragraph (3)).

(4) For engines that are not freshly manufactured but are installed in new nonroad equipment, model year means the calendar year in which the engine is installed in the new nonroad equipment (see definition of ''new nonroad engine,'' paragraph (4)).

(5) For imported engines:

(i) For imported engines described in paragraph (5)(i) of the definition of ''new nonroad engine,'' *model year* has the meaning given in paragraphs (1) through (4) of this definition.

(ii) For imported engines described in paragraph (5)(ii) of the definition of ''new nonroad engine,'' *model year* means the calendar year in which the engine is assembled in its final certified configuration.

(iii) For imported engines described in paragraph (5)(iii) of the definition of ''new nonroad engine,'' *model year* means the calendar year in which the engine is assembled in its imported configuration, unless specified otherwise in this part or in 40 CFR part 1068.

Motor vehicle has the meaning given in 40 CFR 85.1703(a).

New nonroad engine means any of the following things:

(1) A freshly manufactured nonroad engine for which the ultimate purchaser has never received the equitable or legal title. This kind of engine might commonly be thought of as ''brand new.'' In the case of this paragraph (1), the engine is new from the time it is produced until the ultimate purchaser receives the title or the product is placed into service, whichever comes first.

(2) An engine originally manufactured as a motor vehicle engine or a stationary engine that is later used or intended to be used in a piece of nonroad equipment. In this case, the engine is no longer a motor vehicle or stationary engine and becomes a ''new nonroad engine.'' The engine is no longer new when it is placed into nonroad service. This paragraph (2) applies if a motor vehicle engine or a stationary engine is installed in nonroad equipment, or if a motor vehicle or a piece of stationary equipment is modified (or moved) to become nonroad equipment.

(3) A nonroad engine that has been previously placed into service in an application we exclude under § 1054.5, when that engine is installed in a piece of equipment that is covered by this part 1054. The engine is no longer new when it is placed into nonroad service covered by this part 1054. For example, this would apply to a marine-propulsion engine that is no longer used in a marine vessel but is instead installed in a piece of nonroad equipment subject to the provisions of this part.

(4) An engine not covered by paragraphs (1) through (3) of this definition that is intended to be installed in new nonroad equipment. This generally includes installation of used engines in new equipment. The engine is no longer new when the ultimate purchaser receives a title for the equipment or the product is placed into service, whichever comes first.

(5) An imported nonroad engine, subject to the following provisions:

(i) An imported nonroad engine covered by a certificate of conformity issued under this part that meets the criteria of one or more of paragraphs (1) through (4) of this definition, where the original engine manufacturer holds the certificate, is new as defined by those applicable paragraphs.

(ii) An imported engine that will be covered by a certificate of conformity issued under this part, where someone other than the original engine manufacturer holds the certificate (such as when the engine is modified after its initial assembly), is a new nonroad engine when it is imported. It is no longer new when the ultimate purchaser receives a title for the engine or it is placed into service, whichever comes first.

(iii) An imported nonroad engine that is not covered by a certificate of conformity issued under this part at the time of importation is new. This addresses uncertified engines and equipment initially placed into service that someone seeks to import into the United States. Importation of this kind of engine (or equipment containing

such an engine) is generally prohibited by 40 CFR part 1068. However, the importation of such an engine is not prohibited if the engine has a model year before 1997, since it is not subject to standards.

New nonroad equipment means either of the following things:

(1) A nonroad piece of equipment for which the ultimate purchaser has never received the equitable or legal title. The product is no longer new when the ultimate purchaser receives this title or the product is placed into service, whichever comes first.

(2) A nonroad piece of equipment with an engine that becomes new while installed in the equipment. For example a complete piece of equipment that was imported without being covered by a certificate of conformity would be new nonroad equipment because the engine would be considered to be new at the time of importation.

Noncompliant engine or noncompliant equipment means an engine or equipment that was originally covered by a certificate of conformity but is not in the certified configuration or otherwise does not comply with the conditions of the certificate.

Nonconforming engine or nonconforming equipment means an engine or equipment not covered by a certificate of conformity that would otherwise be subject to emission standards.

Nonhandheld means relating to an engine (or equipment) subject to the standards of this part that is not a handheld engine (or equipment).

Nonintegrated equipment manufacturer means an equipment manufacturer that is not an integrated equipment manufacturer. Equipment manufacturers that manufacture the engines for some but not all of their equipment are considered to be nonintegrated manufacturers for that equipment using a different engine manufacturer's engines.

Nonmethane hydrocarbon has the meaning given in 40 CFR 1065.1001. This generally means the difference between the emitted mass of total hydrocarbons and the emitted mass of methane.

Nonroad means relating to nonroad engines or equipment that includes nonroad engines.

Nonroad engine has the meaning given in 40 CFR 1068.30. In general this means all internal-combustion engines except motor vehicle engines, stationary engines, engines used solely for competition, or engines used in aircraft.

Official emission result means the measured emission rate for an emission-data engine on a given duty cycle before the application of any deterioration factor.

Overhead valve means relating to a four-stroke spark-ignition engine in which the intake and exhaust valves are located above the combustion chamber within the cylinder head. Such engines are sometimes referred to as ''valve-in-head'' engines.

Owners manual means a document or collection of documents prepared by the engine manufacturer for the owner or operator to describe appropriate engine maintenance, applicable warranties, and any other information related to operating or keeping the engine. The owners manual is typically provided to the ultimate purchaser at the time of sale. The owners manual may be in paper or electronic format.

Oxides of nitrogen has the meaning given in 40 CFR 1065.1001.

Percent has the meaning given in 40 CFR 1065.1001.

Permeation emissions means fuel that escapes from the fuel system by diffusing through the walls of fuel-system components.

Phase 1 means relating to the Phase 1 emission standards described in 40 CFR 90.103.

Phase 2 means relating to the Phase 2 emission standards described in 40 CFR 90.103.

Phase 3 means relating to the Phase 3 exhaust emission standards described in § 1054.105.

Placed into service means put into initial use for its intended purpose.

Pressurized oil system means a system designed to deliver lubricating oil to internal engine components, including a step to circulate oil through a filter.

Ramped-modal means relating to the ramped-modal type of steady-state test described in § 1054.505.

Rated-speed equipment means nonhandheld equipment in which the

installed engine is intended for operation at a rated speed that is nominally 3600 rpm or higher.

Recreational application means an application in which a vehicle is ridden primarily for pleasure. Note that engines used in reduced-scale model vehicles that cannot be ridden (such as model airplanes) are excluded from this part under § 1054.5.

Relating to as used in this section means relating to something in a specific, direct manner. This expression is used in this section only to define terms as adjectives and not to broaden the meaning of the terms.

Revoke has the meaning given in 40 CFR 1068.30. In general this means to terminate the certificate or an exemption for an engine family.

Round has the meaning given in 40 CFR 1065.1001.

Running loss emissions has the meaning given in 40 CFR 1060.801.

Scheduled maintenance means adjusting, repairing, removing, disassembling, cleaning, or replacing components or systems periodically to keep a part or system from failing, malfunctioning, or wearing prematurely. It also may mean actions you expect are necessary to correct an overt indication of failure or malfunction for which periodic maintenance is not appropriate.

Side valve means relating to a four-stroke spark-ignition engine in which the intake and exhaust valves are located to the side of the cylinder, not within the cylinder head. Such engines are sometimes referred to as ''L-head'' engines.

Small-volume emission family means one of the following:

(1) For requirements related to exhaust emissions for nonhandheld engines and to exhaust and evaporative emissions for handheld engines, *small-volume emission family* means any emission family whose U.S.-directed production volume in a given model year is projected at the time of certification to be no more than 5,000 engines.

(2) For requirements related to evaporative emissions for nonhandheld equipment, *small-volume emission family* means any equipment manufacturer's U.S.-directed production volume for identical fuel tank is projected at the time of certification to be no more than 5,000 units. Tanks are generally considered identical if they are produced under a single part number to conform to a single design or blueprint. Tanks should be considered identical if they differ only with respect to production variability, post-production changes (such as different fittings or grommets), supplier, color, or other extraneous design variables.

Small-volume engine manufacturer means one of the following:

(1) For handheld engines, an engine manufacturer that had U.S.-directed production volume of handheld engines of no more than 25,000 handheld engines in any calendar year. For manufacturers owned by a parent company, this production limit applies to the production of the parent company and all its subsidiaries.

(2) For nonhandheld engines, an engine manufacturer that had U.S.-directed production volume of no more than 10,000 nonhandheld engines in any calendar year. For manufacturers owned by a parent company, this production limit applies to the production of the parent company and all its subsidiaries.

(3) An engine manufacturer that we designate to be a small-volume engine manufacturer under § 1054.635.

Small-volume equipment manufacturer means one of the following:

(1) For handheld equipment, an equipment manufacturer that had a U.S.-directed production volume of no more than 25,000 pieces of handheld equipment in any calendar year. For manufacturers owned by a parent company, this production limit applies to the production of the parent company and all its subsidiaries.

(2) For nonhandheld equipment, an equipment manufacturer with annual U.S.-directed production volumes of no more than 5,000 pieces of nonhandheld equipment in 2007, 2008, and 2009. For manufacturers owned by a parent company, this production limit applies to the production of the parent company and all its subsidiaries.

(3) An equipment manufacturer that we designate to be a small-volume equipment manufacturer under § 1054.635.

Snowthrower engine means an engine used exclusively to power snowthrowers.

Spark-ignition means relating to a gasoline-fueled engine or any other type of engine with a spark plug (or other sparking device) and with operating characteristics significantly similar to the theoretical Otto combustion cycle. Spark-ignition engines usually use a throttle to regulate intake air flow to control power during normal operation.

Steady-state means relating to emission tests in which engine speed and load are held at a finite set of essentially constant values. Steady-state tests are either discrete-mode tests or ramped-modal tests.

Structurally integrated nylon fuel tank has the meaning given in 40 CFR 1060.801.

Subchapter U means the portion of the Code of Federal Regulations including 40 CFR parts 1000 through 1299.

Suspend has the meaning given in 40 CFR 1068.30. In general this means to temporarily discontinue the certificate or an exemption for an engine family.

Test engine means an engine in a test sample.

Test sample means the collection of engines selected from the population of an emission family for emission testing. This may include testing for certification, production-line testing, or in-use testing.

Tethered gas cap means a gas cap that is loosely but permanently connected to the fuel tank.

Thermal reactor means a hot surface in the engine exhaust system that has the effect of significantly lowering emissions of one or more regulated pollutants. Hot surfaces that have an inconsequential effect on emissions are not thermal reactors.

Total hydrocarbon has the meaning given in 40 CFR 1065.1001. This generally means the combined mass of organic compounds measured by the specified procedure for measuring total hydrocarbon, expressed as an atomic hydrocarbon with a hydrogen-to-carbon ratio of 1.85:1.

Total hydrocarbon equivalent has the meaning given in 40 CFR 1065.1001. This generally means the sum of the carbon mass contributions of non-oxygenated hydrocarbons, alcohols and aldehydes, or other organic compounds that are measured separately as contained in a gas sample, expressed as exhaust hydrocarbon from petroleum-fueled engines. The atomic hydrogen-to-carbon ratio of the equivalent hydrocarbon is 1.85:1.

Ultimate purchaser means, with respect to any new nonroad equipment or new nonroad engine, the first person who in good faith purchases such new nonroad equipment or new nonroad engine for purposes other than resale.

United States has the meaning given in 40 CFR 1068.30.

Upcoming model year for an emission family means the model year after the one currently in production.

U.S.-directed production volume means the number of engine or equipment units, subject to the requirements of this part, produced by a manufacturer for which the manufacturer has a reasonable assurance that sale was or will be made to ultimate purchasers in the United States.

Useful life means the period during which the engine and equipment are designed to properly function in terms of power output and intended function, without being remanufactured, specified as a number of hours of operation or calendar years, whichever comes first. It is the period during which a nonroad engine is required to comply with all applicable emission standards. See, for example, §§1054.107, 1054.110, and 1054.112. If an engine has no hour meter, the specified number of hours does not limit the period during which an in-use engine is required to comply with emission standards unless the degree of service accumulation can be verified separately.

Variable-speed engine means an engine that is not a constant-speed engine.

Vessel means marine vessel.

Void has the meaning given in 40 CFR 1068.30. In general this means to invalidate a certificate or an exemption both retroactively and prospectively.

Volatile liquid fuel means any fuel other than diesel or biodiesel that is a liquid at atmospheric pressure and has a Reid Vapor Pressure higher than 2.0 pounds per square inch.

We (us, our) means the Administrator of the Environmental Protection Agency and any authorized representatives.

Wide-open throttle means maximum throttle opening.

Wintertime engine means an engine used exclusively to power equipment that is used only in wintertime, such as snowthrowers and ice augers.

[73 FR 59259, Oct. 8, 2008, as amended at 75 FR 23026, Apr. 30, 2010]

§ 1054.805 What symbols, acronyms, and abbreviations does this part use?

The following symbols, acronyms, and abbreviations apply to this part:

ABT Averaging, banking, and trading.
cc cubic centimeters.
CFR Code of Federal Regulations.
CH_4 methane.
CO carbon monoxide.
CO_2 carbon dioxide.
EPA Environmental Protection Agency.
FEL Family Emission Limit.
g gram.
HC hydrocarbon.
hr hour.
kPa kilopascals.
kW kilowatts.
N_2O nitrous oxide.
NMHC nonmethane hydrocarbons.
NO_X oxides of nitrogen (NO and NO_2).
psig pounds per square inch of gauge pressure.
RPM revolutions per minute.
THC total hydrocarbon.
THCE total hydrocarbon equivalent.
U.S.C. United States Code.

§ 1054.815 What provisions apply to confidential information?

(a) Clearly show what you consider confidential by marking, circling, bracketing, stamping, or some other method.

(b) We will store your confidential information as described in 40 CFR part 2. Also, we will disclose it only as specified in 40 CFR part 2. This applies both to any information you send us and to any information we collect from inspections, audits, or other site visits.

(c) If you send us a second copy without the confidential information, we will assume it contains nothing confidential whenever we need to release information from it.

(d) If you send us information without claiming it is confidential, we may make it available to the public without further notice to you, as described in 40 CFR 2.204.

§ 1054.820 How do I request a hearing?

(a) You may request a hearing under certain circumstances as described elsewhere in this part. To do this, you must file a written request, including a description of your objection and any supporting data, within 30 days after we make a decision.

(b) For a hearing you request under the provisions of this part, we will approve your request if we find that your request raises a substantial factual issue.

(c) If we agree to hold a hearing, we will use the procedures specified in 40 CFR part 1068, subpart G.

§ 1054.825 What reporting and recordkeeping requirements apply under this part?

Under the Paperwork Reduction Act (44 U.S.C. 3501 *et seq.*), the Office of Management and Budget approves the reporting and recordkeeping specified in the applicable regulations. The following items illustrate the kind of reporting and recordkeeping we require for engines and equipment regulated under this part:

(a) We specify the following requirements related to engine and equipment certification in this part 1054:

(1) In § 1054.20 we require equipment manufacturers to label their equipment if they are relying on component certification.

(2) In § 1054.135 we require engine manufacturers to keep certain records related to duplicate labels sent to equipment manufacturers.

(3) In § 1054.145 we include various reporting and recordkeeping requirements related to interim provisions.

(4) In subpart C of this part we identify a wide range of information required to certify engines.

(5) In §§ 1054.345 and 1054.350 we specify certain records related to production-line testing.

(6) [Reserved]

(7) In subpart G of this part we identify several reporting and recordkeeping items for making demonstrations and getting approval related to various special compliance provisions.

(8) In §§ 1054.725, 1054.730, and 1054.735 we specify certain records related to averaging, banking, and trading.

(b) We specify the following requirements related to equipment and component certification in 40 CFR part 1060:

(1) In 40 CFR 1060.20 we give an overview of principles for reporting information.

(2) In 40 CFR part 1060, subpart C, we identify a wide range of information required to certify products.

(3) In 40 CFR 1060.301 we require manufacturers to make engines or equipment available for our testing if we make such a request.

(4) In 40 CFR 1060.505 we specify information needs for establishing various changes to published test procedures.

(c) We specify the following requirements related to testing in 40 CFR part 1065:

(1) In 40 CFR 1065.2 we give an overview of principles for reporting information.

(2) In 40 CFR 1065.10 and 1065.12 we specify information needs for establishing various changes to published test procedures.

(3) In 40 CFR 1065.25 we establish basic guidelines for storing test information.

(4) In 40 CFR 1065.695 we identify data that may be appropriate for collecting during testing of in-use engines using portable analyzers.

(d) We specify the following requirements related to the general compliance provisions in 40 CFR part 1068:

(1) In 40 CFR 1068.5 we establish a process for evaluating good engineering judgment related to testing and certification.

(2) In 40 CFR 1068.25 we describe general provisions related to sending and keeping information.

(3) In 40 CFR 1068.27 we require manufacturers to make engines available for our testing or inspection if we make such a request.

(4) In 40 CFR 1068.105 we require equipment manufacturers to keep certain records related to duplicate labels from engine manufacturers.

(5) In 40 CFR 1068.120 we specify recordkeeping related to rebuilding engines.

(6) In 40 CFR part 1068, subpart C, we identify several reporting and recordkeeping items for making demonstrations and getting approval related to various exemptions.

(7) In 40 CFR part 1068, subpart D, we identify several reporting and recordkeeping items for making demonstrations and getting approval related to importing engines.

(8) In 40 CFR 1068.450 and 1068.455 we specify certain records related to testing production-line engines in a selective enforcement audit.

(9) In 40 CFR 1068.501 we specify certain records related to investigating and reporting emission-related defects.

(10) In 40 CFR 1068.525 and 1068.530 we specify certain records related to recalling nonconforming engines.

APPENDIX I TO PART 1054—SUMMARY OF PREVIOUS EMISSION STANDARDS

The following standards apply to nonroad spark-ignition engines produced before the model years specified in § 1054.1:

(a) *Handheld engines.* Phase 1 and Phase 2 standards apply for handheld engines as specified in 40 CFR 90.103 and summarized in the following tables:

TABLE 1 TO APPENDIX I—PHASE 1 EMISSION STANDARDS FOR HANDHELD ENGINES (g/kW-hr) [a]

Engine displacement class	HC	NO_X	CO
Class III	295	5.36	805
Class IV	241	5.36	805
Class V	161	5.36	603

[a] Phase 1 standards are based on testing with new engines only.

TABLE 2 TO APPENDIX I—PHASE 2 EMISSION STANDARDS FOR HANDHELD ENGINES (g/kW-hr) [a]

Engine displacement class	$HC+NO_X$	CO
Class III	50	805
Class IV	50	805
Class V	72	603

[a] The standards shown are the fully phased-in standards. See 40 CFR 90.103 for standards that applied during the phase-in period.

(b) *Nonhandheld engines.* Phase 1 and Phase 2 standards apply for nonhandheld engines as

specified in 40 CFR 90.103 and summarized in the following tables:

TABLE 3 TO APPENDIX I—PHASE 1 EMISSION STANDARDS FOR NONHANDHELD ENGINES (g/kW-hr) [a]

Engine displacement class	$HC+NO_X$	CO
Class I	16.1	519
Class II	13.4	519

[a] Phase 1 standards are based on testing with new engines only.

TABLE 4 TO APPENDIX I—PHASE 2 EMISSION STANDARDS FOR NONHANDHELD ENGINES (g/kW-hr)

Engine displacement class	$HC+NO_X$	$NMHC+NO_X$	CO
Class I-A	50		610
Class I-B	40	37	610
Class I	16.1	14.8	610
Class II [a]	12.1	11.3	610

[a] The Class II standards shown are the fully phased-in standards. See 40 CFR 90.103 for standards that applied during the phase-in period.

APPENDIX II TO PART 1054—DUTY CYCLES FOR LABORATORY TESTING

(a) Test handheld engines with the following steady-state duty cycle:

G3 mode No.	Engine speed [a]	Torque (percent) [b]	Weighting factors
1	Rated speed	100	0.85
2	Warm idle	0	0.15

[a] Test engines at the specified speeds as described in § 1054.505.

[b] Test engines at 100 percent torque by setting operator demand to maximum. Control torque during idle at its warm idle speed as described in 40 CFR 1065.510.

(b) Test nonhandheld engines with one of the following steady-state duty cycles:

(1) The following duty cycle applies for discrete-mode testing:

G2 mode No. [a]	Torque (percent) [b]	Weighting factors
1	100	0.09
2	75	0.2
3	50	0.29
4	25	0.3
5	10	0.07
6	0	0.05

[a] Control engine speed as described in § 1054.505. Control engine speed for Mode 6 as described in § 1054.505(c) for idle operation.

[b] The percent torque is relative to the value established for full-load torque, as described in § 1054.505.

(2) The following duty cycle applies for ramped-modal testing:

RMC mode [a]	Time in mode (seconds)	Torque (percent) [b, c]
1a Steady-state	41	0
1b Transition	20	*
2a Steady-state	135	100
2b Transition	20	*
3a Steady-state	112	10
3b Transition	20	*
4a Steady-state	337	75
4b Transition	20	*
5a Steady-state	518	25
5b Transition	20	*
6a Steady-state	494	50
6b Transition	20	*
7 Steady-state	43	0

* Linear transition.

[a] Control engine speed as described in § 1054.505. Control engine speed for Mode 6 as described in § 1054.505(c) for idle operation.

[b] Advance from one mode to the next within a 20-second transition phase. During the transition phase, command a linear progression from the torque setting of the current mode to the torque setting of the next mode.

[c] The percent torque is relative to the value established for full-load torque, as described in § 1054.505.

PART 1060—CONTROL OF EVAPORATIVE EMISSIONS FROM NEW AND IN—USE NONROAD AND STATIONARY EQUIPMENT

Subpart A—Overview and Applicability

Sec.
1060.1 Which products are subject to this part's requirements?
1060.5 Do the requirements of this part apply to me?
1060.10 How is this part organized?
1060.15 Do any other CFR parts apply to me?
1060.30 Submission of information.

Subpart B—Emission Standards and Related Requirements

1060.101 What evaporative emission requirements apply under this part?
1060.102 What permeation emission control requirements apply for fuel lines?
1060.103 What permeation emission control requirements apply for fuel tanks?
1060.104 What running loss emission control requirements apply?
1060.105 What diurnal requirements apply for equipment?
1060.120 What emission-related warranty requirements apply?
1060.125 What maintenance instructions must I give to buyers?
1060.130 What installation instructions must I give to equipment manufacturers?
1060.135 How must I label and identify the engines and equipment I produce?
1060.137 How must I label and identify the fuel-system components I produce?

Subpart C—Certifying Emission Families

1060.201 What are the general requirements for obtaining a certificate of conformity?
1060.202 What are the certification requirements related to the general standards in § 1060.101?
1060.205 What must I include in my application?
1060.210 What records should equipment manufacturers keep if they do not apply for certification?
1060.225 How do I amend my application for certification?
1060.230 How do I select emission families?
1060.235 What emission testing must I perform for my application for a certificate of conformity?
1060.240 How do I demonstrate that my emission family complies with evaporative emission standards?
1060.250 What records must I keep?
1060.255 What decisions may EPA make regarding my certificate of conformity?

Subpart D—Production Verification Testing

1060.301 Manufacturer testing.
1060.310 Supplying products to EPA for testing.

Subpart E—In-Use Testing

1060.401 General Provisions.

Subpart F—Test Procedures

1060.501 General testing provisions.
1060.505 Other procedures.
1060.510 How do I test EPA Low-Emission Fuel Lines for permeation emissions?
1060.515 How do I test EPA Nonroad Fuel Lines and EPA Cold-Weather Fuel Lines for permeation emissions?
1060.520 How do I test fuel tanks for permeation emissions?
1060.521 How do I test fuel caps for permeation emissions?
1060.525 How do I test fuel systems for diurnal emissions?

Subpart G—Special Compliance Provisions

1060.601 How do the prohibitions of 40 CFR 1068.101 apply with respect to the requirements of this part?
1060.605 Exemptions from evaporative emission standards.
1060.640 What special provisions apply to branded equipment?

Subpart H—Averaging, Banking, and Trading Provisions

1060.701 Applicability.
1060.705 How do I certify components to an emission level other than the standard under this part or use such components in my equipment?

Subpart I—Definitions and Other Reference Information

1060.801 What definitions apply to this part?
1060.805 What symbols, acronyms, and abbreviations does this part use?
1060.810 What materials does this part reference?
1060.815 What provisions apply to confidential information?
1060.820 How do I request a hearing?
1060.825 What reporting and recordkeeping requirements apply under this part?

AUTHORITY: 42 U.S.C. 7401–7671q.

SOURCE: 73 FR 59298, Oct. 8, 2008, unless otherwise noted.

Subpart A—Overview and Applicability

§ 1060.1 Which products are subject to this part's requirements?

(a) The standards and other requirements in this part 1060 apply to the fuel lines, fuel tanks, couplings and fittings, and fuel caps used or intended to be used in the following categories of new engines and equipment that are fueled with a volatile liquid fuel (such as gasoline, but not including diesel fuel), and to the equipment in which these components are installed, starting with the model years shown in Table 1 to this section:

(1) Compression-ignition engines we regulate under 40 CFR part 1039. This includes stationary compression-ignition engines we regulate under the provisions of 40 CFR part 1039, as indicated under 40 CFR part 60, subpart IIII. See the evaporative emission standards specified in 40 CFR 1048.105. These engines are considered to be Large SI engines for purposes of this part 1060.

(2) Marine compression-ignition engines we regulate under 40 CFR part 1042. See the evaporative emission standards specified in 40 CFR 1045.112. These engines are considered to be Marine SI engines for purposes of this part 1060.

(3) Marine SI engines we regulate under 40 CFR part 1045. See the evaporative emission standards specified in 40 CFR 1045.112.

(4) Large SI engines we regulate under 40 CFR part 1048. This includes

stationary spark-ignition engines subject to standards under 40 CFR parts 1048 or 1054 as indicated in 40 CFR part 60, subpart JJJJ. See the evaporative emission standards specified in 40 CFR 1048.105.

(5) Recreational vehicles and engines we regulate under 40 CFR part 1051 (such as snowmobiles and off-highway motorcycles). This includes highway motorcycles subject to standards under 40 CFR part 1051 as indicated in 40 CFR part 86, subpart E since these motorcycles are considered to be recreational vehicles for purposes of this part 1060. See the evaporative emission standards specified in 40 CFR 1051.110.

(6) Small SI engines we regulate under 40 CFR part 1054. See the evaporative emission standards specified for handheld engines in 40 CFR 1054.110 and for nonhandheld engines in 40 CFR 1054.112.

(7) Portable marine fuel tanks and fuel lines associated with such fuel tanks must meet evaporative emission standards specified in 40 CFR 1045.112. Portable nonroad fuel tanks and fuel lines associated with such fuel tanks must also meet evaporative emission standards specified in 40 CFR 1045.112, whether or not they are used with marine vessels. Portable nonroad fuel tanks are considered to be portable marine fuel tanks for purposes of this part 1060.

(b) The regulations in this part 1060 apply for new replacement components used with any of the engines or equipment specified in paragraph (a) of this section as described in § 1060.601.

(c) Fuel caps are subject to evaporative emission standards at the point of installation on a fuel tank. If a fuel cap is certified for use with Marine SI engines or Small SI engines under the optional standards of § 1060.103, it is subject to all the requirements of this part 1060 as if these optional standards were mandatory.

(d) This part 1060 does not apply to any diesel-fueled engine or any other engine that does not use a volatile liquid fuel. In addition, this part does not apply to any engines or equipment in the following categories even if they use a volatile liquid fuel:

(1) Light-duty motor vehicles (see 40 CFR part 86).

(2) Heavy-duty motor vehicles and heavy-duty motor vehicle engines (see 40 CFR part 86). This part 1060 also does not apply to fuel systems for nonroad engines where such fuel systems are subject to part 86 because they are part of a heavy-duty motor vehicle.

(3) Aircraft engines (see 40 CFR part 87).

(4) Locomotives (see 40 CFR part 92 and 1033).

(5) Land-based nonroad diesel engines we regulate under 40 CFR part 89.

(6) Marine diesel engines we regulate under 40 CFR part 89, 94, or 1042.

(7) Land-based spark-ignition engines at or below 19 kW that we regulate under 40 CFR part 90. Note that there are provisions in 40 CFR part 90 that reference specific portions of this part 1060.

(8) Marine spark-ignition engines we regulate under 40 CFR part 91.

(e) This part 1060 does not apply for fuel lines made wholly of metal.

TABLE 1 TO § 1060.1—PART 1060 APPLICABILITY [A]

Equipment category or subcategory	Fuel line permeation	Tank permeation	Diurnal emissions	Running loss emissions
Marine SI—portable marine fuel tanks.	January 1, 2009 [b]	January 1, 2011	January 1, 2010	Not applicable.
Marine SI—personal watercraft.	January 1, 2009	Model year 2011	Model year 2010	Not applicable.
Marine SI—other vessels with installed fuel tanks.	January 1, 2009 [b]	Model year 2012	July 31, 2011	Not applicable.
Large SI	Model year 2007	Not applicable	Model year 2007 (includes tank permeation).	Model year 2007.
Recreational vehicles	Model year 2008	Model year 2008	Not applicable	Not applicable.
Small SI—handheld	Model year 2012 [c]	Model year 2010 [d]	Not applicable	Not applicable.
Small SI—Class I nonhandheld.	January 1, 2009	Model year 2012	Not applicable [e]	Model year 2012.

TABLE 1 TO § 1060.1—PART 1060 APPLICABILITY [A]—Continued

Equipment category or subcategory	Fuel line permeation	Tank permeation	Diurnal emissions	Running loss emissions
Small SI—Class II nonhandheld.	January 1, 2009	Model year 2011	Not applicable [e]	Model year 2011.

[a] Implementation is based on the date of manufacture of the equipment. Where we do not identify a specific date, the emission standards start to apply at the beginning of the model year.
[b] January 1, 2011 for primer bulbs. Standards phase in for under-cowl fuel lines on outboard engines, by length: 30% in 2010, 60% in 2011, 90% in 2012–2014, 100% in 2015.
[c] 2013 for small-volume emission families that do not include cold-weather fuel lines.
[d] 2011 for structurally integrated nylon fuel tanks and 2013 for all small-volume emission families.
[e] Manufacturers may optionally meet diurnal standards as specified in § 1060.105(e).

§ 1060.5 Do the requirements of this part apply to me?

The requirements of this part are generally addressed to the manufacturers that are subject to this part's requirements as described in paragraph (a) of this section. The term ''you'' generally means the manufacturer or manufacturers that are subject to these requirements. Paragraphs (b) through (e) of this section describe which manufacturers may or must certify their products. (Note: § 1060.601(f) allows the certification responsibility to be delegated in certain circumstances.)

(a) *Overall responsibilities.* Manufacturers of the engines, equipment, and fuel-system components described in § 1060.1 are subject to the standards and other requirements of this part 1060 except as otherwise noted. Multiple manufacturers may be subject to these standards and other requirements. For example, when a Small SI equipment manufacturer buys fuel line manufactured by another person and installs them in its equipment, both the equipment manufacturer and the fuel line manufacturer are subject to the standards and other requirements of this part. The following provisions apply in such cases:

(1) Each person meeting the definition of manufacturer for a product that is subject to the standards and other requirements of this part must comply with such requirements. However, if one person complies with a specific requirement for a given product, then all manufacturers are deemed to have complied with that specific requirement. For example, if a Small SI equipment manufacturer uses fuel lines manufactured and certified by another company, the equipment manufacturer is not required to obtain a certificate with respect to the fuel line emission standards. Such an equipment manufacturer remains subject to the standards and other requirements of this part. However, where a provision requires a specific manufacturer to comply with certain provisions, this paragraph (a) does not change or modify such a requirement. For example, this paragraph (a) does not allow you to rely on another company to certify instead of you if we specifically require you to certify.

(2) The requirements of subparts C and D of this part apply to the manufacturer that obtains the certificate of conformity. Other manufacturers are required to comply with the requirements of subparts C and D of this part only when we send notification. In our notification, we will specify a reasonable period for complying with the requirements identified in the notice. See § 1060.601 for the applicability of 40 CFR part 1068 to these other manufacturers.

(3) Certificate holders are responsible for meeting all applicable requirements even if other manufacturers are also subject to those requirements.

(b) *Marine SI.* Certify vessels, engines, and fuel-system components as follows:

(1) Component manufacturers must certify their fuel lines and fuel tanks intended for installation with Marine SI engines and vessels under this part 1060, except as allowed by § 1060.601(f). This includes permeation and diurnal emission standards.

(2) Vessel manufacturers are subject to all the requirements of this part 1060 that apply to Marine SI engines and

fuel systems. However, they must certify their vessels to the emission standards specified in §§ 1060.102 through 1060.105 only if one or more of the following conditions apply:

(i) Vessel manufacturers install certified components that are not certified to meet all applicable evaporative emission standards, including both permeation and diurnal standards. This would include vessel manufacturers that make their own fuel tanks. Vessel manufacturers would certify under this part 1060.

(ii) Vessel manufacturers intend to generate or use evaporative emission credits, even if they use only certified components to meet all applicable evaporative emission standards. Vessel manufacturers would certify under part 40 CFR part 1045 using the emission-credit provisions in subpart H of that part to demonstrate compliance with the emission standard.

(3) Engine manufacturers must meet all the requirements of this part 1060 that apply to vessel manufacturers for all fuel-system components they install on their engines. For example, engine manufacturers that install undercowl fuel lines and fuel tanks must comply with the requirements specified for vessel manufacturers with respect to those components.

(c) *Large SI.* Certify engines, equipment, and fuel-system components as follows:

(1) Engine manufacturers must certify their engines under 40 CFR part 1048.

(2) Equipment manufacturers and component manufacturers may certify fuel lines and fuel tanks intended for use with Large SI engines under this part 1060.

(d) *Recreational vehicles.* Certify vehicles, engines and fuel-system components as follows:

(1) Vehicle manufacturers must certify their vehicles under 40 CFR part 1051.

(2) Engine manufacturers must meet all the requirements of 40 CFR part 1051 that apply to vehicle manufacturers for all fuel-system components they install on their engines. For example, engine manufacturers that install fuel-line segments on the engines they ship to vehicle manufacturers must comply with the requirements specified for equipment manufacturers with respect to those components.

(3) Component manufacturers may certify fuel lines and fuel tanks intended for recreational vehicles under this part 1060.

(e) *Small SI.* Certify engines, equipment, and fuel-system components as follows:

(1) Component manufacturers must certify their fuel lines and fuel tanks intended for Small SI engines and equipment under this part 1060, except as allowed by § 1060.601(f).

(2) Engine manufacturers must meet all the requirements of this part 1060 that apply to equipment manufacturers for all fuel-system components they install on their engines. Engine manufacturers that produce Small SI engines with complete fuel systems are considered the equipment manufacturers for those engines under this part 1060.

(3) Equipment manufacturers must certify their equipment and are subject to all the requirements of this part 1060.

(f) *Summary of certification responsibilities.* Tables 1 through 3 of this section summarize the certification responsibilities for different kinds of manufacturers as described in paragraphs (b) through (e) of this section. The term ''No'' as used in the tables means that a manufacturer is not required to obtain a certificate of conformity under paragraphs (b) through (e) of this section. In situations where multiple manufacturers are subject to the standards and other requirements of this part, such a manufacturer must nevertheless certify if the manufacturer who is required to certify under paragraphs (b) through (e) of this section fails to obtain a certificate of conformity.

TABLE 1 TO § 1060.5—SUMMARY OF ENGINE MANUFACTURER CERTIFICATION RESPONSIBILITIES

Equipment type	Is the engine manufacturer required to certify fuel systems? [a]	Code of Federal Regulations cite for certification
Marine SI	No.	

TABLE 1 TO § 1060.5—SUMMARY OF ENGINE MANUFACTURER CERTIFICATION RESPONSIBILITIES—Continued

Equipment type	Is the engine manufacturer required to certify fuel systems? [a]	Code of Federal Regulations cite for certification
Large SI	Yes	40 CFR part 1048.
Recreational vehicles	No.	
Small SI	No, unless engines are sold with complete fuel systems	40 CFR part 1060.

[a] Fuel lines and fuel tanks that are attached to or sold with engines must be covered by a certificate of conformity.

TABLE 2 TO § 1060.5—SUMMARY OF EQUIPMENT MANUFACTURER CERTIFICATION RESPONSIBILITIES

Equipment type	Is the equipment manufacturer required to certify fuel systems?	Code of Federal Regulations cite for certification
Marine SI	Yes, but only if vessel manufacturers install uncertified fuel lines or fuel tanks or intend to generate or use evaporative emission credits.	40 CFR part 1060. [a]
Large SI	Allowed but not required	40 CFR part 1060.
Recreational vehicles	Yes, even if vehicle manufacturers install certified components.	40 CFR part 1051.
Small SI	Yes	40 CFR part 1060. [a]

[a] See the exhaust standard-setting part for provisions related to generating or using evaporative emission credits.

TABLE 3 OF § 1060.5—SUMMARY OF COMPONENT MANUFACTURER CERTIFICATION RESPONSIBILITIES

Equipment type	Is the component manufacturer required to certify fuel lines and fuel tanks?	Code of Federal Regulations cite for certification
Marine SI	Yes, including portable marine fuel tanks and associated fuel lines.	40 CFR part 1060.
Large SI	Allowed but not required	40 CFR part 1060.
Recreational vehicles	Allowed but not required	40 CFR part 1060.
Small SI	Yes [a]	40 CFR part 1060.

[a] See § 1060.601 for an allowance to make contractual arrangements with engine or equipment manufacturers instead of certifying.

§ 1060.10 How is this part organized?

This part 1060 is divided into the following subparts:

(a) Subpart A of this part defines the applicability of part 1060 and gives an overview of regulatory requirements.

(b) Subpart B of this part describes the emission standards and other requirements that must be met to certify equipment or components under this part. Note that § 1060.110 discusses certain interim requirements and compliance provisions that apply only for a limited time.

(c) Subpart C of this part describes how to apply for a certificate of conformity.

(d) Subpart D of this part describes the requirements related to verifying that products are being produced as described in an approved application for certification.

(e) Subpart E of this part describes the requirements related to verifying that products are meeting the standards in use.

(f) Subpart F of this part describes how to measure evaporative emissions.

(g) Subpart G of this part and 40 CFR part 1068 describe requirements, prohibitions, and other provisions that apply to manufacturers, owners, operators, and all others.

(h) Subpart H of this part describes how to certify your equipment or components for inclusion in an emission averaging program allowed by an exhaust standard-setting part.

(i) Subpart I of this part contains definitions and other reference information.

§ 1060.15 Do any other CFR parts apply to me?

(a) There is a separate part of the CFR that includes exhaust emission requirements for each particular application, as described in § 1060.1(a). We refer

to these as the exhaust standard-setting parts. In cases where an exhaust standard-setting part includes evaporative requirements, apply this part 1060 as specified in the exhaust standard-setting part, as follows:

(1) The requirements in the exhaust standard-setting part may differ from the requirements in this part. In cases where it is not possible to comply with both the exhaust standard-setting part and this part, you must comply with the requirements in the exhaust standard-setting part. The exhaust standard-setting part may also allow you to deviate from the procedures of this part for other reasons.

(2) The exhaust standard-setting parts may reference some sections of this part 1060 or may allow or require certification under this part 1060. See the exhaust standard-setting parts to determine what provisions of this part 1060 apply for these equipment types.

(b) The requirements and prohibitions of part 1068 of this chapter apply to everyone, including anyone who manufactures, imports, owns, operates, or services any of the fuel systems subject to this part 1060. Part 1068 of this chapter describes general provisions, including the following areas:

(1) Prohibited acts and penalties for engine manufacturers, equipment manufacturers, and others.

(2) Exclusions and exemptions for certain products.

(3) Importing products.

(4) Defect reporting and recall.

(5) Procedures for hearings.

(c) Other parts of this chapter apply if referenced in this part.

§ 1060.30 Submission of information.

(a) This part includes various requirements to record data or other information. Refer to § 1060.825, 40 CFR 1068.25, and the exhaust standard-setting part regarding recordkeeping requirements. If recordkeeping requirements are not specified, store these records in any format and on any media and keep them readily available for one year after you send an associated application for certification, or one year after you generate the data if they do not support an application for certification. You must promptly send us organized, written records in English if we ask for them. We may review them at any time.

(b) The regulations in § 1060.255 and 40 CFR 1068.101 describe your obligation to report truthful and complete information and the consequences of failing to meet this obligation. This includes information not related to certification.

(c) Send all reports and requests for approval to the Designated Compliance Officer (see § 1060.801).

(d) Any written information we require you to send to or receive from another company is deemed to be a required record under this section. Such records are also deemed to be submissions to EPA. We may require you to send us these records whether or not you are a certificate holder.

Subpart B—Emission Standards and Related Requirements

§ 1060.101 What evaporative emission requirements apply under this part?

Products subject to this part must meet emission standards and related requirements as follows:

(a) Section 1060.102 describes permeation emission control requirements for fuel lines.

(b) Section 1060.103 describes permeation emission control requirements for fuel tanks.

(c) Section 1060.104 describes running loss emission control requirements for fuel systems.

(d) Section 1060.105 describes diurnal emission control requirements for fuel tanks.

(e) The following general requirements apply for components and equipment subject to the emission standards in §§ 1060.102 through 1060.105:

(1) *Adjustable parameters.* Components or equipment with adjustable parameters must meet all the requirements of this part for any adjustment in the physically adjustable range.

(2) *Prohibited controls.* The following controls are prohibited:

(i) For anyone to design, manufacture, or install emission control systems so they cause or contribute to an unreasonable risk to public health, welfare, or safety while operating.

(ii) For anyone to design, manufacture, or install emission control systems with features that disable, deactivate, or bypass the emission controls, either actively or passively. For example, you may not include a manual vent that the operator can open to bypass emission controls. You may ask us to allow such features if needed for safety reasons or if the features are fully functional during emission tests described in subpart F of this part.

(3) *Emission credits.* Equipment manufacturers are allowed to comply with the emission standards in this part using evaporative emission credits only if the exhaust standard-setting part explicitly allows it for evaporative emissions. See the exhaust standard-setting part and subpart H of this part for information about complying with evaporative emission credits. For equipment manufacturers to generate or use evaporative emission credits, components must be certified to a family emission limit, which serves as the standard for those components.

(f) This paragraph (f) specifies requirements that apply to equipment manufacturers subject to requirements under this part, whether or not they are subject to and certify to any of the emission standards in §§ 1060.102 through 1060.105. Equipment manufacturers meeting these requirements will be deemed to be certified as in conformity with the requirements of this paragraph (f) without submitting an application for certification, as follows:

(1) *Fuel caps, vents, and carbon canisters.* You are responsible for ensuring that proper caps and vents are installed on each new piece of equipment that is subject to emission standards under this part. The following particular requirements apply to equipment that is subject to running loss or diurnal emission standards, including portable marine fuel tanks:

(i) All equipment must have a tethered fuel cap. Fuel caps must also include a visual, audible, or other physical indication that they have been properly sealed.

(ii) You may not add vents unless they are specified in or allowed by the applicable certificates of conformity.

(iii) If the emission controls rely on carbon canisters, they must be installed in a way that prevents exposing the carbon to water or liquid fuel.

(2) *Fuel-line fittings.* The following requirements apply for fuel-line fittings that will be used with fuel lines that must meet permeation emission standards:

(i) Use good engineering judgment to ensure that all fuel-line fittings will remain securely connected to prevent fuel leakage throughout the useful life of the equipment.

(ii) Fuel lines that are intended to be detachable (such as those for portable marine fuel tanks) must be self-sealing when detached from the fuel tank or engine.

(3) *Refueling.* For any equipment using fuel tanks that are subject to diurnal or permeation emission standards under this part, you must design and build your equipment such that operators can reasonably be expected to fill the fuel tank without spitback or spillage during the refueling event. The following examples illustrate designs that meet this requirement:

(i) Equipment that is commonly refueled using a portable gasoline container should have a fuel tank inlet that is larger than a typical dispensing spout. The fuel tank inlet should be located so the operator can place the nozzle directly in the fuel tank inlet and see the fuel level in the tank while pouring the fuel from an appropriately sized refueling container (either through the tank wall or the fuel tank inlet). We will deem you to comply with the requirements of this paragraph (f)(3)(i) if you design your equipment to meet applicable industry standards related to fuel tank inlets.

(ii) Marine SI vessels with a filler neck extending to the side of the boat should be designed for automatic fuel shutoff. Alternatively, the filler neck should be designed such that the orientation of the filler neck allows dispensed fuel that collects in the filler neck to flow back into the fuel tank. A filler neck that ends with a horizontal or nearly horizontal segment at the opening where fuel is dispensed would not be an acceptable design.

(g) Components and equipment must meet the standards specified in this

part throughout the applicable useful life. Where we do not specify procedures for demonstrating the durability of emission controls, use good engineering judgment to ensure that your products will meet the standards throughout the useful life. The useful life is one of the following values:

(1) The useful life in years specified for the components or equipment in the exhaust standard-setting part.

(2) The useful life in years specified for the engine in the exhaust standard-setting part if the exhaust standards are specified for the engine rather than the equipment and there is no useful life given for components or equipment.

(3) Five years if no useful life is specified in years for the components, equipment, or engines in the exhaust standard-setting part.

§ 1060.102 What permeation emission control requirements apply for fuel lines?

(a) Nonmetal fuel lines must meet permeation requirements as follows:

(1) Marine SI fuel lines, including fuel lines associated with outboard engines or portable marine fuel tanks, must meet the permeation requirements in this section.

(2) Large SI fuel lines must meet the permeation requirements specified in 40 CFR 1048.105.

(3) Fuel lines for recreational vehicles must meet the permeation requirements specified in 40 CFR 1051.110 or in this section.

(4) Small SI fuel lines must meet the permeation requirements in this section, unless they are installed in equipment certified to meet diurnal emission standards under § 1060.105(e).

(b) Different categories of nonroad equipment are subject to different requirements with respect to fuel line permeation. Fuel lines are classified based on measured emissions over the test procedure specified for the class.

(c) The regulations in 40 CFR part 1048 require that fuel lines used with Large SI engines must meet the standards for EPA Low-Emission Fuel Lines. The regulations in 40 CFR part 1054 require that fuel lines used with handheld Small SI engines installed in cold-weather equipment must meet the standards for EPA Cold-Weather Fuel Lines. Unless specified otherwise in this subchapter U, fuel lines used with all other engines and equipment subject to the provisions of this part 1060, including fuel lines associated with outboard engines or portable marine fuel tanks, must meet the standards for EPA Nonroad Fuel Lines.

(d) The following standards apply for each fuel line classification:

(1) EPA Low-Emission Fuel Lines must have permeation emissions at or below 10 g/m^2/day when measured according to the test procedure described in § 1060.510. Fuel lines that comply with this emission standard are deemed to comply with all the emission standards specified in this section.

(2) EPA Nonroad Fuel Lines must have permeation emissions at or below 15 g/m^2/day when measured according to the test procedure described in § 1060.515.

(3) EPA Cold-Weather Fuel Lines must meet the following permeation emission standards when measured according to the test procedure described in § 1060.515:

TABLE 1 TO § 1060.102—PERMEATION STANDARDS FOR EPA COLD-WEATHER FUEL LINES

Model year	Standard (g/m^2/day)
2012	290
2013	275
2014	260
2015	245
2016 and later	225

(e) You may certify fuel lines as follow:

(1) You may certify straight-run fuel lines as sections of any length.

(2) You may certify molded fuel lines in any configuration representing your actual production, subject to the provisions for selecting a worst-case configuration in § 1060.235(b).

(3) You may certify fuel line assemblies as aggregated systems that include multiple sections of fuel line with connectors and fittings. For example, you may certify fuel lines for portable marine fuel tanks as assemblies of fuel hose, primer bulbs, and self-sealing end connections. The length of such an assembly must not be longer than a typical in-use installation and must always be less than 2.5

meters long. You may also certify primer bulbs separately. The standard applies with respect to the total permeation emissions divided by the wetted internal surface area of the assembly. Where it is not practical to determine the actual internal surface area of the assembly, you may assume that the internal surface area per unit length of the assembly is equal to the ratio of internal surface area per unit length of the hose section of the assembly.

[73 FR 59298, Oct. 8, 2008, as amended at 74 FR 8426, Feb. 24, 2009]

§ 1060.103 What permeation emission control requirements apply for fuel tanks?

(a) Fuel tanks must meet permeation requirements as follows:

(1) Marine SI fuel tanks, including engine-mounted fuel tanks and portable marine fuel tanks, must meet the permeation requirements in this section.

(2) Large SI fuel tanks must meet diurnal emission standards as specified in § 1060.105, which includes measurement of permeation emissions. No separate permeation standard applies.

(3) Fuel tanks for recreational vehicles must meet the permeation requirements specified in 40 CFR 1051.110 or in this section.

(4) Small SI fuel tanks must meet the permeation requirements in this section unless they are installed in equipment certified to meet diurnal emission standards under § 1060.105(e).

(b) Permeation emissions from fuel tanks may not exceed 1.5 $g/m^2/day$ when measured at a nominal temperature of 28 °C with the test procedures for tank permeation in § 1060.520. You may also choose to meet a standard of 2.5 $g/m^2/day$ if you perform testing at a nominal temperature of 40 °C under § 1060.520(d).

(c) The exhaust standard-setting part may allow for certification of fuel tanks to a family emission limit for calculating evaporative emission credits as described in subpart H of this part instead of meeting the emission standards in this section.

(d) For purposes of this part, fuel tanks do not include fuel lines that are subject to § 1060.102, petcocks designed for draining fuel, grommets used with fuel lines, or grommets used with other hose or tubing excluded from the definition of ''fuel line.'' Fuel tanks include other fittings (such as fuel caps, gaskets, and O-rings) that are directly mounted to the fuel tank.

(e) Fuel caps may be certified separately relative to the permeation emission standard in paragraph (b) of this section using the test procedures specified in § 1060.521. Fuel caps certified alone do not need to meet the emission standard. Rather, fuel caps would be certified with a Family Emission Limit, which is used for demonstrating that fuel tanks meet the emission standard as described in § 1060.520(b)(5). For the purposes of this paragraph (e), gaskets or O-rings that are produced as part of an assembly with the fuel cap are considered part of the fuel cap.

(f) Metal fuel tanks that meet the permeation criteria in § 1060.240(d)(2) or use certified nonmetal fuel caps will be deemed to be certified as in conformity with the requirements of this section without submitting an application for certification.

[73 FR 59298, Oct. 8, 2008, as amended at 74 FR 8427, Feb. 24, 2009; 75 FR 23026, Apr. 30, 2010]

§ 1060.104 What running loss emission control requirements apply?

(a) Engines and equipment must meet running loss requirements as follows:

(1) Marine SI engines and vessels are not subject to running loss emission standards.

(2) Large SI engines and equipment must prevent fuel boiling during operation as specified in 40 CFR 1048.105.

(3) Recreational vehicles are not subject to running loss emission standards.

(4) Nonhandheld Small SI engines and equipment that are not used in wintertime equipment must meet running loss requirements described in this section. Handheld Small SI engines and equipment are not subject to running loss emission standards.

(b) You must demonstrate control of running loss emissions in one of the following ways if your engines or equipment are subject to the requirements of this section:

(1) Route running loss emissions into the engine intake system so fuel vapors

vented from the tank during engine operation are combusted in the engine. This may involve routing vapors through a carbon canister. If another company has certified the engine with respect to exhaust emissions, state in your application for certification that you have followed the engine manufacturer's installation instructions.

(2) Use a fuel tank that remains sealed under normal operating conditions. This may involve a bladder or other means to prevent pressurized fuel tanks.

(3) Get an approved Executive Order from the California Air Resources Board showing that your system meets applicable running loss standards in California.

(c) If you are subject to both running loss and diurnal emission standards, use good engineering judgment to ensure that the emission controls are compatible.

§ 1060.105 What diurnal requirements apply for equipment?

(a) Fuel tanks must meet diurnal emission requirements as follows:

(1) Marine SI fuel tanks, including engine-mounted fuel tanks and portable marine fuel tanks, must meet the requirements related to diurnal emissions specified in this section.

(2) Large SI fuel tanks must meet the requirements related to diurnal emissions specified in 40 CFR 1048.105.

(3) Recreational vehicles are not subject to diurnal emission standards.

(4) Small SI fuel tanks are not subject to diurnal emission standards, except as specified in paragraph (e) of this section.

(b) Diurnal emissions from Marine SI fuel tanks may not exceed 0.40 g/gal/day when measured using the test procedures specified in § 1060.525 for general fuel temperatures. An alternative standard of 0.16 g/gal/day applies for fuel tanks installed in nontrailerable boats when measured using the corresponding fuel temperature profile in § 1060.525. Portable marine fuel tanks are not subject to the requirements of this paragraph (b), but must instead comply with the requirements of paragraphs (c) and (d) of this section.

(c) Portable marine fuel tanks and associated fuel-system components must meet the following requirements:

(1) They must be self-sealing when detached from the engines. The tanks may not vent to the atmosphere when attached to an engine. An integrated or external manually activated device may be included in the fuel tank design to temporarily relieve pressure before refueling or connecting the fuel tank to the engine. However, the default setting for such a vent must be consistent with the requirement in paragraph (c)(2) of this section.

(2) They must remain sealed up to a positive pressure of 24.5 kPa (3.5 psig); however, they may contain air inlets that open when there is a vacuum pressure inside the tank. Such fuel tanks may not contain air outlets that vent to the atmosphere at pressures below 34.5 kPa (5.0 psig).

(d) Detachable fuel lines that are intended for use with portable marine fuel tanks must have connection points that are self-sealing when not attached to the engine or fuel tank.

(e) Manufacturers of nonhandheld Small SI equipment may optionally meet the diurnal emission standards adopted by the California Air Resources Board in the Final Regulation Order, Article 1, Chapter 15, Division 3, Title 13, California Code of Regulations, July 26, 2004 (incorporated by reference in § 1060.810). To meet this requirement, equipment must be certified to the performance standards specified in Title 13 CCR § 2754(a) based on the applicable requirements specified in CP–902 and TP–902, including the requirements related to fuel caps in Title 13 CCR § 2756. Equipment certified under this paragraph (e) does not need to use fuel lines or fuel tanks that have been certified separately. Equipment certified under this paragraph (e) are subject to all the referenced requirements as if these specifications were mandatory.

(f) The following general provisions apply for controlling diurnal emissions:

(1) If you are subject to both running loss and diurnal emission standards, use good engineering judgment to ensure that the emission controls are compatible.

(2) You may not use diurnal emission controls that increase the occurrence of fuel spitback or spillage during in-use refueling. Also, if you use a carbon canister, you must incorporate design features that prevent liquid gasoline from reaching the canister during refueling or as a result of fuel sloshing or fuel expansion.

(3) You must meet the following provisions from ABYC H–25, July 2010 (incorporated by reference in § 1060.810) with respect to portable marine fuel tanks:

(i) Provide information related to the pressure relief method (25.8.2.1 and 25.8.2.1.1).

(ii) Perform system testing (25.10 through 25.10.5).

[73 FR 59298, Oct. 8, 2008, as amended at 74 FR 8427, Feb. 24, 2009; 75 FR 56482, Sept. 16, 2010]

§ 1060.120 What emission-related warranty requirements apply?

(a) *General requirements.* The certifying manufacturer must warrant to the ultimate purchaser and each subsequent purchaser that the new nonroad equipment, including its evaporative emission control system, meets two conditions:

(1) It is designed, built, and equipped so it conforms at the time of sale to the ultimate purchaser with the requirements of this part.

(2) It is free from defects in materials and workmanship that may keep it from meeting these requirements.

(b) *Warranty period.* Your emission-related warranty must be valid for at least two years from the point of first retail sale.

(c) *Components covered.* The emission-related warranty covers all components whose failure would increase the evaporative emissions, including those listed in 40 CFR part 1068, Appendix I, and those from any other system you develop to control emissions. Your emission-related warranty does not cover components whose failure would not increase evaporative emissions.

(d) *Relationships between manufacturers.* (1) The emission-related warranty required for equipment manufacturers that certify equipment must cover all specified components even if another company produces the component.

(2) Where an equipment manufacturer fulfills a warranty obligation for a given component, the component manufacturer is deemed to have also met that obligation.

§ 1060.125 What maintenance instructions must I give to buyers?

Give ultimate purchasers written instructions for properly maintaining and using the emission control system. You may not specify any maintenance more frequently than once per year. For example, if you produce cold-weather equipment that requires replacement of fuel cap gaskets or O-rings, provide clear instructions to the ultimate purchaser, including the required replacement interval.

§ 1060.130 What installation instructions must I give to equipment manufacturers?

(a) If you sell a certified fuel-system component for someone else to install in equipment, give the installer instructions for installing it consistent with the requirements of this part.

(b) Make sure the instructions have the following information:

(1) Include the heading: ''Emission-related installation instructions''.

(2) State: ''Failing to follow these instructions when installing [IDENTIFY COMPONENT(S)] in a piece of nonroad equipment violates federal law (40 CFR 1068.105(b)), subject to fines or other penalties as described in the Clean Air Act.''

(3) Describe any limits on the range of applications needed to ensure that the component operates consistently with your application for certification. For example:

(i) For fuel tanks sold without fuel caps, you must specify the requirements for the fuel cap, such as the allowable materials, thread pattern, how it must seal, etc. You must also include instructions to tether the fuel cap as described in § 1060.101(f)(1) if you do not sell your fuel tanks with tethered fuel caps.

(ii) If your fuel lines do not meet permeation standards specified in § 1060.102 for EPA Low-Emission Fuel Lines, tell

equipment manufacturers not to install the fuel lines with Large SI engines that operate on gasoline or another volatile liquid fuel.

(4) Describe instructions for installing components so they will operate according to design specifications in your application for certification. Specify sufficient detail to ensure that the equipment will meet the applicable standards when your component is installed.

(5) If you certify a component with a family emission limit above the emission standard, be sure to indicate that the equipment manufacturer must have a source of credits to offset the higher emissions. Also indicate the applications for which the regulations allow for compliance using evaporative emission credits.

(6) Instruct the equipment manufacturers that they must comply with the requirements of § 1060.202.

(c) You do not need installation instructions for components you install in your own equipment.

(d) Provide instructions in writing or in an equivalent format. For example, you may post instructions on a publicly available Web site for downloading or printing, provided you keep a copy of these instructions in your records. If you do not provide the instructions in writing, explain in your application for certification how you will ensure that each installer is informed of the installation requirements.

§ 1060.135 How must I label and identify the engines and equipment I produce?

The labeling requirements of this section apply for all equipment manufacturers and for engine manufacturers that certify with respect to evaporative emissions. See § 1060.137 for the labeling requirements that apply separately for fuel lines, fuel tanks, and other fuel-system components.

(a) You must affix a permanent and legible label identifying each engine or piece of equipment before introducing it into U.S. commerce. The label must be—

(1) Attached in one piece so it is not removable without being destroyed or defaced.

(2) Secured to a part of the engine or equipment needed for normal operation and not normally requiring replacement.

(3) Durable and readable for the equipment's entire life.

(4) Written in English.

(5) Readily visible in the final installation. It may be under a hinged door or other readily opened cover. It may not be hidden by any cover attached with screws or any similar designs. Labels on marine vessels (except personal watercraft) must be visible from the helm.

(b) If you hold a certificate for your engine or equipment with respect to evaporative emissions, the engine or equipment label specified in paragraph (a) of this section must—

(1) Include the heading ''EMISSION CONTROL INFORMATION''.

(2) Include your corporate name and trademark. You may identify another company and use its trademark instead of yours if you comply with the provisions of § 1060.640.

(3) State the date of manufacture [MONTH and YEAR] of the equipment; however, you may omit this from the label if you stamp or engrave it on the equipment.

(4) State: ''THIS EQUIPMENT [or VEHICLE or BOAT] MEETS U.S. EPA EVAP STANDARDS.''

(5) Identify the certified fuel-system components installed on the equipment as described in this paragraph (b)(5). Establish a component code for each certified fuel-system component, including those certified by other companies. You may use part numbers, certification numbers, or any other unique code that you or the certifying component manufacturer establish. This identifying information must correspond to printing or other labeling on each certified fuel-system component, whether you or the component manufacturer certifies the individual component. You may identify multiple part numbers if your equipment design might include an option to use more than one component design (such as from multiple component manufacturers). Use one of the following methods to include information on the label that identifies certified fuel-system components:

(i) Use the component codes to identify each certified fuel-system component on the label specified in this paragraph (b).

(ii) Identify the emission family on the label using EPA's standardized designation or an abbreviated equipment code that you establish in your application for certification. Equipment manufacturers that also certify their engines with respect to exhaust emissions may use the same emission family name for both exhaust and evaporative emissions. If you use the provisions of this paragraph (b)(5)(ii), you must identify all the certified fuel-system components and the associated component codes in your application for certification. In this case the label specified in this paragraph (b) may omit the information related to specific fuel-system components.

(c) If you produce equipment without certifying with respect to evaporative emissions, the equipment label specified in paragraph (a) of this section must—

(1) State: ''MEETS U.S. EPA EVAP STANDARDS USING CERTIFIED COMPONENTS.''

(2) Include your corporate name.

(d) You may add information to the emission control information label as follows:

(1) You may identify other emission standards that the engine meets or does not meet (such as California standards). You may include this information by adding it to the statement we specify or by including a separate statement.

(2) You may add other information to ensure that the engine will be properly maintained and used.

(3) You may add appropriate features to prevent counterfeit labels. For example, you may include the engine's unique identification number on the label.

(e) Anyone subject to the labeling requirements in this part 1060 may ask us to approve modified labeling requirements if it is necessary or appropriate. We will approve the request if the alternate label is consistent with the requirements of this part.

[73 FR 59298, Oct. 8, 2008, as amended at 75 FR 23026, Apr. 30, 2010]

§ 1060.137 How must I label and identify the fuel-system components I produce?

The requirements of this section apply for manufacturers of fuel-system components subject to emission standards under this part 1060. However, these requirements do not apply if you produce fuel-system components that will be covered by a certificate of conformity from another company under § 1060.601(f). These requirements also do not apply for components you certify if you also certify the equipment in which the component is installed and meet the labeling requirements in § 1060.135.

(a) Label the components identified in this paragraph (a), unless the components are too small to be properly labeled. Unless we approve otherwise, we consider parts large enough to be properly labeled if they have space for 12 characters in six-point font (approximately 2 mm × 12 mm). For these small parts, you may omit the label as long as you identify those part numbers in your maintenance and installation instructions.

(1) All fuel tanks, except for metal fuel tanks that are deemed certified under § 1060.103(f).

(2) Fuel lines. This includes primer bulbs unless they are excluded from the definition of ''fuel line'' under the standard-setting part. Label primer bulbs separately.

(3) Carbon canisters.

(4) Fuel caps, as described in this paragraph (a)(4). Fuel caps must be labeled if they are separately certified under § 1060.103 or if the diurnal control system requires that the fuel tank hold pressure. Fuel caps must also be labeled if they are mounted directly on the fuel tank, unless the fuel tank is certified based on a worst-case fuel cap.

(5) Replaceable pressure-relief assemblies. This does not apply if the component is integral to the fuel tank or fuel cap.

(6) Other components we determine to be critical to the proper functioning of evaporative emission controls.

(b) Label your certified fuel-system components at the time of manufacture. The label must be—

(1) Attached so it is not removable without being destroyed or defaced.

This may involve printing directly on the product. For molded products, you may use the mold to apply the label.

(2) Durable and readable for the equipment's entire life.

(3) Written in English.

(c) Except as specified in paragraph (d) of this section, you must create the label specified in paragraph (b) of this section as follows:

(1) Include your corporate name. You may identify another company instead of yours if you comply with the provisions of § 1054.640.

(2) Include EPA's standardized designation for the emission family.

(3) State: ''EPA COMPLIANT''.

(4) Fuel tank labels must identify the FEL, if applicable.

(5) Fuel line labels must identify the applicable permeation level. This may involve any of the following approaches:

(i) Identify the applicable numerical emission standard (such as 15 g/m^2/day).

(ii) Identify the applicable emission standards using EPA classifications (such as EPA Nonroad Fuel Lines).

(iii) Identify the applicable industry standard specification (such as SAE J30 R12).

(6) Fuel line labels must be continuous, with no more than 12 inches before repeating. We will consider labels to be continuous if the space between repeating segments is no longer than that of the repeated information. You may add a continuous stripe or other pattern to help identify the particular type or grade of your products.

(d) You may create an abbreviated label for your components. Such a label may rely on codes to identify the component. The code must at a minimum identify the certification status, your corporate name, and the emission family. For example, XYZ Manufacturing may label its fuel lines as ''EPA–XYZ–A15'' to designate that their ''A15'' family was certified to meet EPA's 15 g/m^2/day standard. If you do this, you must describe the abbreviated label in your application for certification and identify all the associated information specified in paragraph (c) of this section.

(e) You may ask us to approve modified labeling requirements in this section as described in § 1060.135(e).

[73 FR 59298, Oct. 8, 2008, as amended at 75 FR 23026, Apr. 30, 2010]

Subpart C—Certifying Emission Families

§ 1060.201 What are the general requirements for obtaining a certificate of conformity?

Manufacturers of engines, equipment, or fuel-system components may need to certify their products with respect to evaporative emission standards as described in §§ 1060.1 and 1060.601. See § 1060.202 for requirements related to certifying with respect to the requirements specified in § 1060.101(f). The following general requirements apply for obtaining a certificate of conformity:

(a) You must send us a separate application for a certificate of conformity for each emission family. A certificate of conformity for equipment is valid starting with the indicated effective date but it is not valid for any production after December 31 of the model year for which it is issued. No certificate will be issued after December 31 of the model year. A certificate of conformity for a component is valid starting with the indicated effective date but it is not valid for any production after the end of the *production period* for which it is issued.

(b) The application must contain all the information required by this part and must not include false or incomplete statements or information (see § 1060.255).

(c) We may ask you to include less information than we specify in this subpart as long as you maintain all the information required by § 1060.250. For example, equipment manufacturers might use only components that are certified by other companies to meet applicable emission standards, in which case we would not require submission of emission data already submitted by the component manufacturer.

(d) You must use good engineering judgment for all decisions related to your application (see 40 CFR 1068.5).

(e) An authorized representative of your company must approve and sign the application.

(f) See § 1060.255 for provisions describing how we will process your application.

(g) We may specify streamlined procedures for small-volume equipment manufacturers.

§ 1060.202 What are the certification requirements related to the general standards in § 1060.101?

Equipment manufacturers must ensure that their equipment is certified with respect to the general standards specified in § 1060.101(f) as follows:

(a) If § 1060.5 requires you to certify your equipment to any of the emission standards specified in §§ 1060.102 through 1060.105, describe in your application for certification how you will meet the general standards specified in § 1060.101(f).

(b) If § 1060.5 does not require you to certify your equipment to any of the emission standards specified in §§ 1060.102 through 1060.105, your equipment is deemed to be certified with respect to the general standards specified in § 1060.101(f) if you design and produce your equipment to meet those standards.

(1) You must keep records as described in § 1060.210. The other provisions of this part for certificate holders apply only as specified in § 1060.5.

(2) Your equipment is deemed to be certified only to the extent that it meets the general standards in § 1060.101(f). Thus, it is a violation of 40 CFR 1068.101(a)(1) to introduce into U.S. commerce such equipment that does not meet applicable requirements under § 1060.101(f).

(c) Instead of relying on paragraph (b) of this section, you may submit an application for certification and obtain a certificate from us. The provisions of this part apply in the same manner for certificates issued under this paragraph (c) as for any other certificate issued under this part.

§ 1060.205 What must I include in my application?

This section specifies the information that must be in your application, unless we ask you to include less information under § 1060.201(c). We may require you to provide additional information to evaluate your application.

(a) Describe the emission family's specifications and other basic parameters of the emission controls. Describe how you meet the running loss emission control requirements in § 1060.104, if applicable. Describe how you meet any applicable equipment-based requirements of § 1060.101(e) and (f). State whether you are requesting certification for gasoline or some other fuel type. List each distinguishable configuration in the emission family.

(b) Describe the products you selected for testing and the reasons for selecting them.

(c) Describe the test equipment and procedures that you used, including any special or alternate test procedures you used (see § 1060.501).

(d) List the specifications of the test fuel to show that it falls within the required ranges specified in subpart F of this part.

(e) State the equipment applications to which your certification is limited. For example, if your fuel system meets the emission requirements of this part applicable only to handheld Small SI equipment, state that the requested certificate would apply only for handheld Small SI equipment.

(f) Identify the emission family's useful life.

(g) Include the maintenance instructions you will give to the ultimate purchaser of each new nonroad engine (see § 1060.125).

(h) Include the emission-related installation instructions you will provide if someone else will install your component in a piece of nonroad equipment (see § 1060.130).

(i) Describe your emission control information label (see §§ 1060.135 and 1060.137).

(j) Identify the emission standards or FELs to which you are certifying the emission family.

(k) Present emission data to show your products meet the applicable emission standards. Note that §§ 1060.235 and 1060.240 allow you to submit an application in certain cases without new emission data.

(l) State that your product was tested as described in the application (including the test procedures, test parameters, and test fuels) to show you meet the requirements of this part. If

you did not do the testing, identify the source of the data.

(m) Report all test results, including those from invalid tests, whether or not they were conducted according to the test procedures of subpart F of this part. We may ask you to send other information to confirm that your tests were valid under the requirements of this part.

(n) Unconditionally certify that all the products in the emission family comply with the requirements of this part, other referenced parts of the CFR, and the Clean Air Act.

(o) Include good-faith estimates of U.S.-directed production volumes. Include a justification for the estimated production volumes if they are substantially different than actual production volumes in earlier years for similar models.

(p) Include other applicable information, such as information required by other subparts of this part.

(q) Name an agent for service located in the United States. Service on this agent constitutes service on you or any of your officers or employees for any action by EPA or otherwise by the United States related to the requirements of this part.

§ 1060.210 What records should equipment manufacturers keep if they do not apply for certification?

If you are an equipment manufacturer that does not need to obtain a certificate of conformity for your equipment as described in § 1060.5, you must keep the records specified in this section to document compliance with applicable requirements. We may review these records at any time. If we ask, you must send us these records within 30 days. You must keep these records for eight years from the end of the model year.

(a) Identify your equipment models and the annual U.S.-directed production volumes for each model.

(b) Identify the emission family names of the certificates that will cover your equipment, the part numbers of those certified components, and the names of the companies that hold the certificates. You must be able to identify this information for each piece of equipment you produce.

(c) Describe how you comply with any emission-related installation instructions, labeling requirements, and the general standards in § 1060.101(e) and (f).

§ 1060.225 How do I amend my application for certification?

Before we issue a certificate of conformity, you may amend your application to include new or modified configurations, subject to the provisions of this section. After we have issued your certificate of conformity, you may send us an amended application requesting that we include new or modified configurations within the scope of the certificate, subject to the provisions of this section. You must amend your application if any changes occur with respect to any information included in your application.

(a) You must amend your application before you take any of the following actions:

(1) Add a configuration to an emission family. In this case, the configuration added must be consistent with other configurations in the emission family with respect to the criteria listed in § 1060.230.

(2) Change a configuration already included in an emission family in a way that may affect emissions, or change any of the components you described in your application for certification. This includes production and design changes that may affect emissions any time during the equipment's lifetime.

(3) Modify an FEL for an emission family as described in paragraph (f) of this section. Note however that component manufacturers may not modify an FEL for their products unless they submit a separate application for a new emission family.

(b) To amend your application for certification, send the Designated Compliance Officer the following information:

(1) Describe in detail the addition or change in the configuration you intend to make.

(2) Include engineering evaluations or data showing that the amended emission family complies with all applicable requirements. You may do this by showing that the original emission

data are still appropriate for showing that the amended family complies with all applicable requirements.

(3) If the original emission data for the emission family are not appropriate to show compliance for the new or modified configuration, include new test data showing that the new or modified configuration meets the requirements of this part.

(c) We may ask for more test data or engineering evaluations. Within 30 days after we make our request, you must provide the information or describe your plan for providing it in a timely manner.

(d) For emission families already covered by a certificate of conformity, we will determine whether the existing certificate of conformity covers your new or modified configuration. You may ask for a hearing if we deny your request (see § 1060.820).

(e) For emission families already covered by a certificate of conformity, you may start producing the new or modified configuration anytime after you send us your amended application and before we make a decision under paragraph (d) of this section. However, if we determine that the affected configurations do not meet applicable requirements, we will notify you to cease production of the configurations and may require you to recall the equipment at no expense to the owner. Choosing to produce equipment under this paragraph (e) is deemed to be consent to recall all equipment that we determine do not meet applicable emission standards or other requirements and to remedy the nonconformity at no expense to the owner. If you do not provide information we request under paragraph (c) of this section within 30 days after we request it, you must stop producing the new or modified equipment.

(f) If you hold a certificate of conformity for equipment and you have certified the fuel tank that you install in the equipment, you may ask us to approve a change to your FEL after the start of production. The changed FEL may not apply to equipment you have already introduced into U.S. commerce, except as described in this paragraph (f). If we approve a changed FEL after the start of production, you must identify the date or serial number for applying the new FEL. If you identify this by month and year, we will consider that a lowered FEL applies on the last day of the month and a raised FEL applies on the first day of the month. You may ask us to approve a change to your FEL in the following cases:

(1) You may ask to raise your FEL for your emission family at any time. In your request, you must show that you will still be able to meet the emission standards as specified in the exhaust standard-setting part. If you amend your application by submitting new test data to include a newly added or modified fuel tank configuration, as described in paragraph (b)(3) of this section, use the appropriate FELs with corresponding production volumes to calculate your production-weighted average FEL for the model year. In all other circumstances, you must use the higher FEL for the entire family to calculate your production-weighted average FEL under subpart H of this part.

(2) You may ask to lower the FEL for your emission family only if you have test data from production units showing that emissions are below the proposed lower FEL. The lower FEL applies only for units you produce after we approve the new FEL. Use the appropriate FELs with corresponding production volumes to calculate your production-weighted average FEL for the model year.

(g) Component manufacturers may not change an emission family's FEL under any circumstances. Changing the FEL would require submission of a new application for certification.

§ 1060.230 How do I select emission families?

(a) For purposes of certification, divide your product line into families of equipment (or components) that are expected to have similar emission characteristics throughout their useful life.

(b) Group fuel lines into the same emission family if they are the same in all the following aspects:

(1) Type of material including barrier layer.

(2) Production method.

(3) Types of connectors and fittings (material, approximate wall thickness, etc.) for fuel line assemblies certified together.

(c) Group fuel tanks (or fuel systems including fuel tanks) into the same emission family if they are the same in all the following aspects:

(1) Type of material, including any pigments, plasticizers, UV inhibitors, or other additives that are expected to affect control of emissions.

(2) Production method.

(3) Relevant characteristics of fuel cap design for fuel systems subject to diurnal emission requirements.

(4) Gasket material.

(5) Emission control strategy.

(6) Family emission limit, if applicable.

(d) Group other fuel-system components and equipment into the same emission family if they are the same in all the following aspects:

(1) Emission control strategy and design.

(2) Type of material (such as type of charcoal used in a carbon canister). This criteria does not apply for materials that are unrelated to emission control performance.

(3) The fuel systems meet the running loss emission standard based on the same type of compliance demonstration specified in §1060.104(b), if applicable.

(e) You may subdivide a group of equipment or components that are identical under paragraphs (b) through (d) of this section into different emission families if you show the expected emission characteristics are different during the useful life.

(f) In unusual circumstances, you may group equipment or components that are not identical with respect to the things listed in paragraph (b) through (d) of this section into the same emission family if you show that their emission characteristics during the useful life will be similar. The provisions of this paragraph (f) do not exempt any engines or equipment from meeting all the applicable standards and requirements in subpart B of this part.

(g) Emission families may include components used in multiple equipment categories. Such families are covered by a single certificate. For example, a single emission family may contain fuel tanks used in both Small SI equipment and Marine SI vessels.

§1060.235 What emission testing must I perform for my application for a certificate of conformity?

This section describes the emission testing you must perform to show compliance with the emission standards in subpart B of this part.

(a) Test your products using the procedures and equipment specified in subpart F of this part.

(b) Select an emission-data unit from each emission family for testing. If you are certifying with a family emission limit, you must test at least three emission-data units. In general, you must test a preproduction product that will represent actual production. However, for fuel tank permeation, you may test a tank with standardized geometry provided that it is made of the same material(s) and appropriate wall thickness. In general, the test procedures specify that components or systems be tested rather than complete equipment. For example, to certify your family of Small SI equipment, you would need to test a sample of fuel line for permeation emissions and a fuel tank for permeation emissions. Note that paragraph (e) of this section and §1060.240 allow you in certain circumstances to certify without testing an emission-data unit from the emission family. Select test components that are most likely to exceed (or have emissions nearer to) the applicable emission standards as follows:

(1) For fuel tanks, consider the following factors associated with higher emission levels:

(i) Smallest average wall thickness (or barrier thickness, as appropriate).

(ii) Greatest extent of pinch welds for tanks using barrier technologies.

(iii) Greatest relative area of gasket material, especially if gaskets are made of high-permeation materials.

(2) For fuel lines, consider the following factors associated with higher emission levels:

(i) Smallest average wall thickness (or barrier thickness, as appropriate).

(ii) Smallest inner diameter.

(c) You may not do maintenance on emission-data units.

(d) We may measure emissions from any of your products from the emission family, as follows:

(1) You must supply your products to us if we choose to perform confirmatory testing.

(2) If we measure emissions on one of your products, the results of that testing become the official emission results for the emission family. Unless we later invalidate these data, we may decide not to consider your data in determining if your emission family meets applicable requirements.

(e) You may ask to use carryover emission data from a previous production period instead of doing new tests, but only if all the following are true:

(1) The emission family from the previous production period differs from the current emission family only with respect to production period or other characteristics unrelated to emissions. You may also ask to add a configuration subject to § 1060.225.

(2) The emission-data unit from the previous production period remains the appropriate emission-data unit under paragraph (b) of this section. For example, you may not carryover emission data for your family of nylon fuel tanks if you have added a thinner-walled fuel tank than was tested previously.

(3) The data show that the emission-data unit would meet all the requirements that apply to the emission family covered by the application for certification.

(f) We may require you to test another unit of the same or different configuration in addition to the unit(s) tested under paragraph (b) of this section.

(g) If you use an alternate test procedure under § 1060.505, and later testing shows that such testing does not produce results that are equivalent to the procedures specified in this part, we may reject data you generated using the alternate procedure.

§ 1060.240 How do I demonstrate that my emission family complies with evaporative emission standards?

(a) For purposes of certification, your emission family is considered in compliance with an evaporative emission standard in subpart B of this part if you do either of the following:

(1) You have test results showing a certified emission level from the fuel tank or fuel line (as applicable) in the family are at or below the applicable standard.

(2) You comply with design specifications as specified in paragraphs (d) through (f) of this section.

(b) Your emission family is deemed not to comply if any fuel tank or fuel line representing that family has an official emission result above the standard.

(c) Round each official emission result to the same number of decimal places as the emission standard.

(d) You may demonstrate for certification that your emission family complies with the fuel tank permeation standards specified in § 1060.103 with any of the following control technologies:

(1) A coextruded high-density polyethylene fuel tank with a continuous ethylene vinyl alcohol barrier layer (with not more than 40 molar percent ethylene) making up at least 2 percent of the fuel tank's overall wall thickness with any of the following gasket and fuel-cap characteristics:

(i) No nonmetal gaskets or fuel caps.

(ii) All nonmetal gaskets and fuel caps made from low-permeability materials.

(iii) Nonmetal gaskets and fuel caps that are not made from low-permeability materials up to the following limits:

(A) Gaskets with a total exposed surface area less than 0.25 percent of the total inside surface area of the fuel tank. For example, a fuel tank with an inside surface area of 0.40 square meters may use high-permeation gasket material representing a surface area of up to 1,000 mm^2 ($0.25\% \times 1/100 \times 0.40\ m^2 \times 1{,}000{,}000\ mm^2/m^2$). Determine surface area based on the amount of material exposed to liquid fuel.

(B) Fuel caps directly mounted to the fuel tank with the surface area of the fuel cap less than 3.0 percent of the total inside surface area of the fuel tank. Use the smallest inside cross-sectional area of the opening on which the cap is mounted as the fuel cap's surface area.

(2) A metal fuel tank with the gasket and fuel-cap characteristics meeting the specifications in paragraphs (d)(1)(i) through (iii) of this section.

(e) You may demonstrate for certification that your emission family complies with the diurnal emission standards specified in § 1060.105 with any of the following control technologies:

(1) A Marine SI fuel tank sealed up to a positive pressure of 7.0 kPa (1.0 psig); however, the fuel tank may contain air inlets that open when there is a vacuum pressure inside the tank.

(2) A Marine SI fuel tank equipped with a passively purged carbon canister that meets the requirements of this paragraph (e)(2). The carbon must adsorb no more than 0.5 grams of water per gram of carbon at 90% relative humidity and a temperature of 25±5 °C. The carbon granules must have a minimum mean diameter of 3.1 mm based on the procedures in ASTM D2862 (incorporated by reference in § 1060.810). The carbon must also pass a dust attrition test based on ASTM D3802 (incorporated by reference in § 1060.810), except that hardness is defined as the ratio of mean particle diameter before and after the test and the procedure must involve twenty ½-inch steel balls and ten ¾-inch steel balls. Use good engineering judgment in the structural design of the carbon canister. The canister must have a volume compensator or some other device to prevent the carbon pellets from moving within the canister as a result of vibration or changing temperature. The canister must have a minimum working capacity as follows:

(i) You may use the measurement procedures specified by the California Air Resources Board in Attachment 1 to TP–902 to show that canister working capacity is least 3.6 grams of vapor storage capacity per gallon of nominal fuel tank capacity (or 1.4 grams of vapor storage capacity per gallon of nominal fuel tank capacity for fuel tanks used in nontrailerable boats). TP–902 is part of Final Regulation Order, Article 1, Chapter 15, Division 3, Title 13, California Code of Regulations, July 26, 2004 as adopted by the California Air Resources Board (incorporated by reference in § 1060.810).

(ii) You may produce canisters with a minimum carbon volume of 0.040 liters per gallon of nominal fuel tank capacity (or 0.016 liters per gallon for fuel tanks used in nontrailerable boats). The carbon canister must have a minimum effective length-to-diameter ratio of 3.5 and the vapor flow must be directed with the intent of using the whole carbon bed. The carbon must have a minimum carbon working capacity of 90 grams per liter.

(f) We may establish additional design certification options where we find that new test data demonstrate that the use of a different technology design will ensure compliance with the applicable emission standards.

(g) You may not establish a family emission limit below the emission standard for components certified based on design specifications under this section even if actual emission rates are much lower.

§ 1060.250 What records must I keep?

(a) Organize and maintain the following records:

(1) A copy of all applications and any summary information you send us.

(2) Any of the information we specify in § 1060.205 that you were not required to include in your application.

(3) A detailed history of each emission-data unit. For each emission data unit, include all of the following:

(i) The emission-data unit's construction, including its origin and buildup, steps you took to ensure that it represents production equipment, any components you built specially for it, and all the components you include in your application for certification.

(ii) All your emission tests, including documentation on routine and standard tests, and the date and purpose of each test.

(iii) All tests to diagnose emission control performance, giving the date and time of each and the reasons for the test.

(iv) Any other significant events.

(4) Annual production figures for each emission family divided by assembly plant.

(5) Keep a list of equipment identification numbers for all the equipment you produce under each certificate of conformity.

(b) Keep required data from routine emission tests (such as temperature measurements) for one year after we issue the associated certificate of conformity. Keep all other information

specified in paragraph (a) of this section for eight years after we issue your certificate.

(c) Store these records in any format and on any media as long as you can promptly send us organized, written records in English if we ask for them. You must keep these records readily available. We may review them at any time.

§ 1060.255 What decisions may EPA make regarding my certificate of conformity?

(a) If we determine your application is complete and shows that the emission family meets all the requirements of this part and the Clean Air Act, we will issue a certificate of conformity for your emission family for that production period. We may make the approval subject to additional conditions.

(b) We may deny your application for certification if we determine that your emission family fails to comply with emission standards or other requirements of this part or the Clean Air Act. We will base our decision on all available information. If we deny your application, we will explain why in writing.

(c) In addition, we may deny your application or suspend or revoke your certificate if you do any of the following:

(1) Refuse to comply with any testing or reporting requirements.

(2) Submit false or incomplete information (paragraph (e) of this section applies if this is fraudulent).

(3) Render inaccurate any test data.

(4) Deny us from completing authorized activities despite our presenting a warrant or court order (see 40 CFR 1068.20). This includes a failure to provide reasonable assistance.

(5) Produce equipment or components for importation into the United States at a location where local law prohibits us from carrying out authorized activities.

(6) Fail to supply requested information or amend your application to include all equipment or components being produced.

(7) Take any action that otherwise circumvents the intent of the Clean Air Act or this part.

(d) We may void your certificate if you do not keep the records we require or do not give us information when we ask for it.

(e) We may void your certificate if we find that you intentionally submitted false or incomplete information.

(f) If we deny your application or suspend, revoke, or void your certificate, you may ask for a hearing (see § 1060.820).

Subpart D—Production Verification Testing

§ 1060.301 Manufacturer testing.

(a) Using good engineering judgment, you must evaluate production samples to verify that equipment or components you produce are as specified in the certificate of conformity. This may involve testing using certification procedures or other measurements.

(b) You must give us records to document your evaluation if we ask for them.

§ 1060.310 Supplying products to EPA for testing.

Upon our request, you must supply a reasonable number of production samples to us for verification testing.

Subpart E—In-use Testing

§ 1060.401 General Provisions.

We may perform in-use testing of any equipment or fuel-system components subject to the standards of this part.

Subpart F—Test Procedures

§ 1060.501 General testing provisions.

(a) This subpart is addressed to you as a certifying manufacturer but it applies equally to anyone who does testing for you.

(b) Unless we specify otherwise, the terms ''procedures'' and ''test procedures'' in this part include all aspects of testing, including the equipment specifications, calibrations, calculations, and other protocols and procedural specifications needed to measure emissions.

(c) The specification for gasoline to be used for testing is given in 40 CFR

1065.710. Use the grade of gasoline specified for general testing. For testing specified in this part that requires a blend of gasoline and ethanol, blend this grade of gasoline with fuel-grade ethanol meeting the specifications of ASTM D4806 (incorporated by reference in § 1060.810). You do not need to measure the ethanol concentration of such blended fuels and may instead calculate the blended composition by assuming that the ethanol is pure and mixes perfectly with the base fuel. For example, if you mix 10.0 liters of fuel-grade ethanol with 90.0 liters of gasoline, you may assume the resulting mixture is 10.0 percent ethanol. You may use more or less pure ethanol if you can demonstrate that it will not affect your ability to demonstrate compliance with the applicable emission standards. Note that unless we specify otherwise, any references to gasoline-ethanol mixtures containing a specified ethanol concentration means mixtures meeting the provisions of this paragraph (c).

(d) Accuracy and precision of all temperature measurements must be ±1.0 °C or better. If you use multiple sensors to measure differences in temperature, calibrate the sensors so they will be within 0.5 °C of each other when they are in thermal equilibrium at a point within the range of test temperatures (use the starting temperature in Table 1 to § 1060.525 unless this is not feasible).

(e) Accuracy and precision of mass balances must be sufficient to ensure accuracy and precision of two percent or better for emission measurements for products at the maximum level allowed by the standard. The readability of the display may not be coarser than half of the required accuracy and precision. Examples are shown in the following table for a digital readout:

	Example #1	Example #2	Example #3
Applicable standard	1.5 g/m^2/day	1.5 g/m^2/day	15 g/m^2/day.
Internal surface area	1.15 m^2	0.47 m^2	0.015 m^2.
Length of test	14.0 days	14.0 days	14.1 days.
Maximum allowable mass change	24.15 g	9.87 g	3.173 g.
Required accuracy and precision	±0.483 g or better	±0.197 g or better	±0.0635 g or better.
Required readability	0.1 g or better	0.1 g or better	0.01 g or better.

[73 FR 59298, Oct. 8, 2008, as amended at 74 FR 8427, Feb. 24, 2009]

§ 1060.505 Other procedures.

(a) *Your testing*. The procedures in this part apply for all testing you do to show compliance with emission standards, with certain exceptions listed in this section.

(b) *Our testing*. These procedures generally apply for testing that we do to determine if your equipment complies with applicable emission standards. We may perform other testing as allowed by the Clean Air Act.

(c) *Exceptions*. We may allow or require you to use procedures other than those specified in this part in the following cases:

(1) You may request to use special procedures if your equipment cannot be tested using the specified procedures. We will approve your request if we determine that it would produce emission measurements that represent in-use operation and we determine that it can be used to show compliance with the requirements of the standard-setting part.

(2) You may ask to use emission data collected using other procedures, such as those of the California Air Resources Board or the International Organization for Standardization. We will approve this only if you show us that using these other procedures does not affect your ability to show compliance with the applicable emission standards. This generally requires emission levels to be far enough below the applicable emission standards so any test differences do not affect your ability to state unconditionally that your equipment will meet all applicable emission standards when tested using the specified test procedures.

(3) You may request to use alternate procedures that are equivalent to allowed procedures or are more accurate

or more precise than allowed procedures. See 40 CFR 1065.12 for a description of the information that is generally required to show that an alternate test procedure is equivalent.

(4) The test procedures are specified for gasoline-fueled equipment. If your equipment will use another volatile liquid fuel instead of gasoline, use a test fuel that is representative of the fuel that will be used with the equipment in use. You may ask us to approve other changes to the test procedures to reflect the effects of using a fuel other than gasoline.

(d) *Approval*. If we require you to request approval to use other procedures under paragraph (c) of this section, you may not use them until we approve your request.

§ 1060.510 How do I test EPA Low-Emission Fuel Lines for permeation emissions?

For EPA Low-Emission Fuel Lines, measure emissions according to SAE J2260, which is incorporated by reference in § 1060.810.

[74 FR 8427, Feb. 24, 2009]

§ 1060.515 How do I test EPA Nonroad Fuel Lines and EPA Cold-Weather Fuel Lines for permeation emissions?

Measure emission as follows for EPA Nonroad Fuel Lines and EPA Cold-Weather Fuel Lines:

(a) Prior to permeation testing, use good engineering judgment to precondition the fuel line by filling it with the fuel specified in this paragraph (a), sealing the openings, and soaking it for at least four weeks at 43 ±5 °C or eight weeks at 23 ± 5 °C.

(1) For EPA Nonroad Fuel Lines, use Fuel CE10, which is Fuel C as specified in ASTM D471 (incorporated by reference in § 1060.810) blended with ethanol such that the blended fuel has 10.0 ± 1.0 percent ethanol by volume.

(2) For EPA Cold-Weather Fuel Lines, use gasoline blended with ethanol such that the blended fuel has 10.0 ± 1.0 percent ethanol by volume.

(b) Drain the fuel line and refill it immediately with the fuel specified in paragraph (a) of this section. Be careful not to spill any fuel.

(c) Measure fuel line permeation emissions using the equipment and procedures for weight-loss testing specified in SAE J30 or SAE J1527 (incorporated by reference in § 1060.810). Start the measurement procedure within 8 hours after draining and refilling the fuel line. Perform the emission test over a sampling period of 14 days. Determine your final emission result based on the highest measured valued over the 14-day period.

(d) Use good engineering judgment to test fuel line segments with short length or narrow inner diameter. For example, size the fuel reservoir appropriately for the tested fuel line and take steps to eliminate air bubbles from narrow-diameter fuel lines.

[73 FR 59298, Oct. 8, 2008, as amended at 74 FR 8427, Feb. 24, 2009; 75 FR 23027, Apr. 30, 2010]

§ 1060.520 How do I test fuel tanks for permeation emissions?

Measure permeation emissions by weighing a sealed fuel tank before and after a temperature-controlled soak.

(a) *Preconditioning durability testing*. Take the following steps before an emission test, in any order, if your emission control technology involves surface treatment or other post-processing treatments such as an epoxy coating:

(1) *Pressure cycling*. Perform a pressure test by sealing the tank and cycling it between +13.8 and −1.7 kPa (+2.0 and −0.5 psig) for 10,000 cycles at a rate of 60 seconds per cycle. The purpose of this test is to represent environmental wall stresses caused by pressure changes and other factors (such as vibration or thermal expansion). If your tank cannot be tested using the pressure cycles specified by this paragraph (a)(1), you may ask to use special test procedures under § 1060.505.

(2) *UV exposure*. Perform a sunlight-exposure test by exposing the tank to an ultraviolet light of at least 24 W/m^2 (0.40 W-hr/m^2/min) on the tank surface for at least 450 hours. Alternatively, the fuel tank may be exposed to direct natural sunlight for an equivalent period of time as long as you ensure that the tank is exposed to at least 450 daylight hours.

(3) *Slosh testing*. Perform a slosh test by filling the tank to 40–50 percent of

its capacity with the fuel specified in paragraph (e) of this section and rocking it at a rate of 15 cycles per minute until you reach one million total cycles. Use an angle deviation of +15° to −15° from level.

(4) *Cap testing*. Perform durability cycles on fuel caps intended for use with handheld equipment by putting the fuel cap on and taking it off 300 times. Tighten the fuel cap each time in a way that represents the typical in-use experience.

(b) *Preconditioning fuel soak*. Take the following steps before an emission test:

(1) Fill the tank with the fuel specified in paragraph (e) of this section, seal it, and allow it to soak at 28 ±5 °C for at least 20 weeks. Alternatively, the tank may be soaked for at least 10 weeks at 43±5 °C. You may count the time of the preconditioning steps in paragraph (a) of this section as part of the preconditioning fuel soak as long as the ambient temperature remains within the specified temperature range and the fuel tank is at least 40 percent full; you may add or replace fuel as needed to conduct the specified durability procedures.

(2) Empty the fuel tank and immediately refill it with the specified test fuel to its nominal capacity. Be careful not to spill any fuel.

(3) [Reserved]

(4) Allow the tank and its contents to equilibrate to the temperatures specified in paragraph (d)(7) of this section. Seal the fuel tank as described in paragraph (b)(5) of this section once the fuel temperatures are stabilized at the test temperature. You must seal the tank no more than eight hours after refueling. Until the fuel tank is sealed, take steps to minimize the vapor losses from the fuel tank, such as keeping the fuel cap loose on the fuel inlet or routing vapors through a vent hose.

(5) Seal the fuel tank as follows:

(i) If fuel tanks are designed for use with a filler neck such that the fuel cap is not directly mounted on the fuel tank, you may seal the fuel inlet with a nonpermeable covering.

(ii) If fuel tanks are designed with fuel caps directly mounted on the fuel tank, take one of the following approaches:

(A) Use a production fuel cap expected to have permeation emissions at least as high as the highest-emitting fuel cap that you expect to be used with fuel tanks from the emission family. It would generally be appropriate to consider an HDPE fuel cap with a nitrile rubber seal to be worst-case.

(B) You may seal the fuel inlet with a nonpermeable covering if you separately account for permeation emissions from the fuel cap. This may involve a separate measurement of permeation emissions from a worst-case fuel cap as described in §1060.521. This may also involve specifying a worst-case Family Emission Limit based on separately certified fuel caps as described in §1060.103(e).

(C) If you use or specify a fuel gasket made of low-permeability material, you may seal the fuel inlet with a nonpermeable covering and calculate an emission rate for the complete fuel tank using a default value of 30 g/m^2/day for the fuel cap (or 50 g/m^2/day for testing at 40 °C). Use the smallest inside cross-sectional area of the opening on which the cap is mounted as the fuel cap's surface area.

(iii) Openings that are not normally sealed on the fuel tank (such as hose-connection fittings and vents in fuel caps) may be sealed using nonpermeable fittings such as metal or fluoropolymer plugs.

(iv) Openings for petcocks that are designed for draining fuel may be sealed using nonpermeable fittings such as metal or fluoropolymer plugs.

(v) Openings for grommets may be sealed using nonpermeable fittings such as metal or fluoropolymer plugs.

(vi) Rather than sealing a fuel tank with nonpermeable fittings, you may produce a fuel tank for testing without machining or stamping those holes.

(c) *Reference tank*. A reference tank is required to correct for buoyancy effects that may occur during testing. Prepare the reference tank as follows:

(1) Obtain a second tank that is identical to the test tank. You may not use a tank that has previously contained fuel or any other contents that might affect its mass stability.

(2) Fill the reference tank with enough glass beads (or other inert material) so the mass of the reference

tank is approximately the same as the test tank when filled with fuel. Considering the performance characteristics of your balance, use good engineering judgment to determine how similar the mass of the reference tank needs to be to the mass of the test tank.

(3) Ensure that the inert material is dry.

(4) Seal the tank.

(d) *Permeation test run.* To run the test, take the following steps after preconditioning:

(1) Determine the fuel tank's internal surface area in square-meters, accurate to at least three significant figures. You may use less accurate estimates of the surface area if you make sure not to overestimate the surface area.

(2) Weigh the sealed test tank and record the weight. Place the reference tank on the balance and tare it so it reads zero. Place the sealed test tank on the balance and record the difference between the test tank and the reference tank. This value is M_o. Take this measurement directly after sealing the test tank as specified in paragraphs (b)(4) and (5) of this section.

(3) Carefully place the tank within a temperature-controlled room or enclosure. Do not spill or add any fuel.

(4) Close the room or enclosure as needed to control temperatures and record the time. However, you may need to take steps to prevent an accumulation of hydrocarbon vapors in the room or enclosure that might affect the degree to which fuel permeates through the fuel tank. This might simply involve passive ventilation to allow fresh air exchanges.

(5) Ensure that the measured temperature in the room or enclosure stays within the temperatures specified in paragraph (d)(6) of this section.

(6) Leave the tank in the room or enclosure for the duration of the test run.

(7) Hold the temperature of the room or enclosure at 28 ± 2 °C; measure and record the temperature at least daily. You may alternatively hold the temperature of the room or enclosure at 40 ± 2 °C to demonstrate compliance with the alternative standards specified in § 1060.103(b).

(8) Measure weight loss daily by retaring the balance using the reference tank and weighing the sealed test tank. Calculate the cumulative weight loss in grams for each measurement. Calculate the coefficient of determination, r^2, based on a linear plot of cumulative weight loss vs. test days. Use the equation in 40 CFR 1065.602(k), with cumulative weight loss represented by y_i and cumulative time represented by y_{ref}. The daily measurements must be at approximately the same time each day. You may omit up to two daily measurements in any seven-day period. Test for ten full days, then determine when to stop testing as follows:

(i) You may stop testing after the measurement on the tenth day if r^2 is at or above 0.95 or if the measured value is less than 50 percent of the applicable standard. (Note that if a Family Emission Limit applies for the family, it is considered to be the applicable standard for that family.) This means that if you stop testing with an r^2 below 0.95, you may not use the data to show compliance with a Family Emission Limit less than twice the measured value.

(ii) If after ten days of testing your r^2 value is below 0.95 and your measured value is more than 50 percent of the applicable standard, continue testing for a total of 20 days or until r^2 is at or above 0.95. If r^2 is not at or above 0.95 within 20 days of testing, discontinue the test and precondition the fuel tank further until it has stabilized emission levels, then repeat the testing.

(9) Record the difference in mass between the reference tank and the test tank for each measurement. This value is M_i, where *i* is a counter representing the number of days elapsed. Subtract M_i from M_o and divide the difference by the internal surface area of the fuel tank. Divide this g/m² value by the number of test days (using at least two decimal places) to calculate the emission rate in g/m²/day. Example: If a tank with an internal surface area of 0.720 m² weighed 1.31 grams less than the reference tank at the beginning of the test and weighed 9.86 grams less than the reference tank after soaking for 10.03 days, the emission rate would be—

$$((-1.31\ \text{g}) - (-9.82\ \text{g}))/0.720\ \text{m}^2/10.03\ \text{days} = 1.1784\ \text{g/m}^2/\text{day}$$

(10) Determine your final emission result based on the cumulative weight loss measured on the final day of testing. Round this result to the same number of decimal places as the emission standard.

(e) *Fuel specifications.* Use gasoline blended with ethanol such that the blended fuel has 10.0 ± 1.0 percent ethanol by volume as specified in § 1060.501. As an alternative, you may use Fuel CE10, as described in § 1060.515(a)(1).

(f) *Flow chart.* The following figure presents a flow chart for the permeation testing described in this section:

Figure 1 to §1060.520 — Fuel Tank Permeation Test Procedures

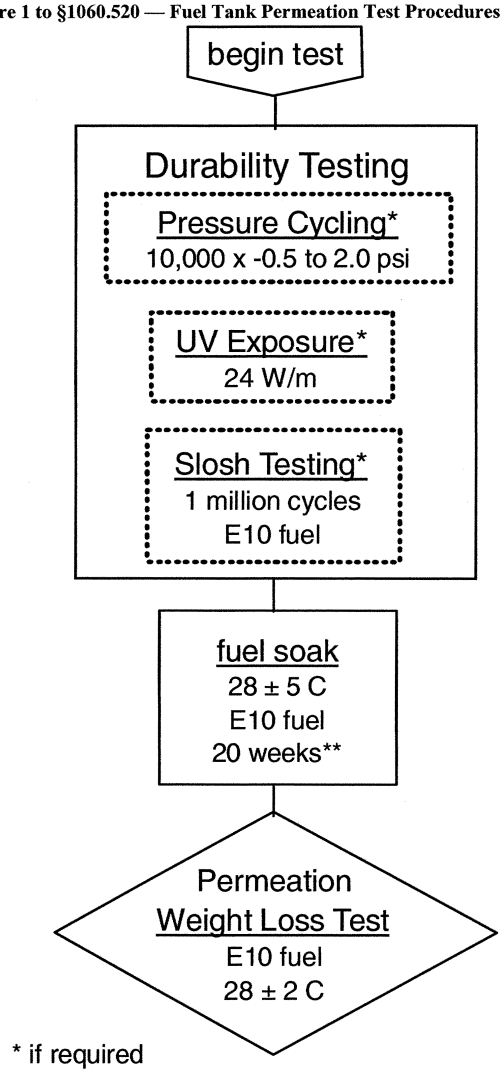

* if required

*** The length of "soak" during durability testing may be included in the fuel soak period provided that fuel remains in the tank. Soak periods can be shortened to 10 weeks if performed at 43* ± 5 C

[73 FR 59298, Oct. 8, 2008, as amended at 75 FR 23027, Apr. 30, 2010]

§ 1060.521 How do I test fuel caps for permeation emissions?

If you measure a fuel tank's permeation emissions with a nonpermeable covering in place of the fuel cap under § 1060.520(b)(5)(ii)(B), you must separately measure permeation emissions from a fuel cap. You may show that your fuel tank and fuel cap meet emission standards by certifying them separately or by combining the separate measurements into a single emission rate based on the relative surface areas of the fuel tank and fuel cap. However, you may not combine these emission measurements if you test the fuel cap at a nominal temperature of 28 °C and you test the fuel tank at 40 °C. Measure the fuel cap's permeation emissions as follows:

(a) Select a fuel cap expected to have permeation emissions at least as high as the highest-emitting fuel cap that you expect to be used with fuel tanks from the emission family. Include a gasket that represents production models. If the fuel cap includes vent paths, seal these vents as follows:

(1) If the vent path is through grooves in the gasket, you may use another gasket with no vent grooves if it is otherwise the same as a production gasket.

(2) If the vent path is through the cap, seal any vents for testing.

(b) Attach the fuel cap to a fuel tank with a capacity of at least one liter made of metal or some other impermeable material.

(c) Use the procedures specified in § 1060.520 to measure permeation emissions. Calculate emission rates using the smallest inside cross sectional area of the opening on which the cap is mounted as the fuel cap's surface area.

§ 1060.525 How do I test fuel systems for diurnal emissions?

Use the procedures of this section to determine whether your fuel tanks meet diurnal emission standards as specified in § 1060.105.

(a) Except as specified in paragraph (c) of this section, use the following procedure to measure diurnal emissions:

(1) Diurnal measurements are based on a representative temperature cycle. For marine fuel tanks, the temperature cycle specifies fuel temperatures rather than ambient temperatures. The applicable temperature cycle is indicated in the following table:

TABLE 1 TO § 1060.525—DIURNAL TEMPERATURE PROFILES FOR FUEL TANKS

Time (hours)	Ambient Temperature Profile for Land-based Fuel Tanks (°C)	General Fuel Temperature Profile for Installed Marine Fuel Tanks (°C)	Fuel Temperature Profile for Marine Fuel Tanks Installed in Nontrailerable Boats (°C)
0	22.2	25.6	27.6
1	22.5	25.7	27.6
2	24.2	26.5	27.9
3	26.8	27.9	28.5
4	29.6	29.2	29.0
5	31.9	30.4	29.5
6	33.9	31.4	29.9
7	35.1	32.0	30.1
8	35.4	32.2	30.2
9	35.6	32.2	30.2
10	35.3	32.1	30.2
11	34.5	31.7	30.0
12	33.2	31.0	29.7
13	31.4	30.2	29.4
14	29.7	29.3	29.1
15	28.2	28.6	28.8
16	27.2	28.0	28.5
17	26.1	27.5	28.3
18	25.1	27.0	28.1
19	24.3	26.6	28.0
20	23.7	26.3	27.9
21	23.3	26.1	27.8
22	22.9	25.9	27.7
23	22.6	25.7	27.6

TABLE 1 TO § 1060.525—DIURNAL TEMPERATURE PROFILES FOR FUEL TANKS—Continued

Time (hours)	Ambient Temperature Profile for Land-based Fuel Tanks (°C)	General Fuel Temperature Profile for Installed Marine Fuel Tanks (°C)	Fuel Temperature Profile for Marine Fuel Tanks Installed in Nontrailerable Boats (°C)
24	22.2	25.6	27.6

(2) Fill the fuel tank to 40 percent of nominal capacity with the gasoline specified in 40 CFR 1065.710 for general testing.

(3) Install a vapor line from any vent ports that would not be sealed in the final in-use configuration. Use a length of vapor line representing the largest inside diameter and shortest length that would be expected with the range of in-use installations for the emission family.

(4) Stabilize the fuel tank at the starting temperature of the applicable temperature profile from paragraph (a)(1) of this section. For sealed fuel systems, replace the fuel cap once the fuel reaches equilibrium at the appropriate starting temperature.

(5) If the fuel tank is equipped with a carbon canister, load the canister with butane or gasoline vapors to its *canister working capacity* as specified in § 1060.240(e)(2)(i) and attach it to the fuel tank in a way that represents a typical in-use configuration.

(6) Place the fuel tank with the carbon canister and vent line in a SHED meeting the specifications of 40 CFR 86.107–96(a)(1). Follow the applicable temperature trace from paragraph (a)(1) of this section for one 24-hour period. You need not measure emissions during this stabilization step.

(7) As soon as possible after the stabilization in paragraph (a)(6) of this section, purge the SHED and follow the applicable temperature trace from paragraph (a)(1) of this section for three consecutive 24-hour periods. Start measuring emissions when you start the temperature profile. The end of the first, second, and third emission sampling periods must occur 1440 ± 6, 2880 ± 6, and 4320 ± 6 minutes, respectively, after starting the measurement procedure. Use the highest of the three emission levels to determine whether your fuel tank meets the diurnal emission standard.

(8) For emission control technologies that rely on a sealed fuel system, you may omit the stabilization step in paragraph (a)(6) of this section and the last two 24-hour periods of emission measurements in paragraph (a)(7) of this section. For purposes of this paragraph (a), sealed fuel systems include those that rely on pressure-relief valves, limiting flow orifices, bladder fuel tanks, and volume-compensating air bags.

(b) You may subtract your fuel tank's permeation emissions from the measured diurnal emissions if the fuel tank is preconditioned with diurnal test fuel as described in § 1060.520(b) or if you use good engineering judgment to otherwise establish that the fuel tank has stabilized permeation emissions. Measure permeation emissions for subtraction as specified in § 1060.520(c) and (d) before measuring diurnal emissions, except that the permeation measurement must be done with diurnal test fuel at 28 ± 2 °C. Use appropriate units and corrections to subtract the permeation emissions from the fuel tank during the diurnal emission test. You may not subtract a greater mass of emissions under this paragraph (b) than the fuel tank would emit based on meeting the applicable emission standard for permeation.

Subpart G—Special Compliance Provisions

§ 1060.601 How do the prohibitions of 40 CFR 1068.101 apply with respect to the requirements of this part?

(a) As described in § 1060.1, fuel tanks and fuel lines that are used with or intended to be used with new nonroad engines or equipment are subject to evaporative emission standards under this

part 1060. This includes portable marine fuel tanks and fuel lines and other fuel-system components associated with portable marine fuel tanks. Note that §1060.1 specifies an implementation schedule based on the date of manufacture of nonroad equipment, so new fuel tanks and fuel lines are not subject to standards under this part 1060 if they will be installed for use in equipment built before the specified dates for implementing the appropriate standards, subject to the limitations in paragraph (b) of this section. Except as specified in paragraph (f) of this section, fuel-system components that are subject to permeation or diurnal emission standards under this part 1060 must be covered by a valid certificate of conformity before being introduced into U.S. commerce to avoid violating the prohibition of 40 CFR 1068.101(a). To the extent we allow it under the exhaust standard-setting part, fuel-system components may be certified with a family emission limit higher than the specified emission standard. The provisions of this paragraph (a) do not apply to fuel caps.

(b) New replacement fuel tanks and fuel lines must meet the requirements of this part 1060 if they are intended to be used with nonroad engines or equipment regulated under this part 1060, as follows:

(1) *Applicability of standards between January 1, 2012 and December 31, 2019.* Manufacturers, distributors, retailers, and importers must clearly state on the packaging for all replacement components that could reasonably be used with nonroad engines how such components may be used consistent with the prohibition in paragraph (a) of this section. It is presumed that such components are intended for use with nonroad engines regulated under this part 1060 unless the components, or the packaging for such components, clearly identify appropriate restrictions. This requirement does not apply for components that are clearly not intended for use with fuels.

(2) *Applicability of standards after January 1, 2020.* Starting January 1, 2020 it is presumed that replacement components will be used with nonroad engines regulated under this part 1060 if they can reasonably be used with such engines. Manufacturers, distributors, retailers, and importers are therefore obligated to take reasonable steps to ensure that any uncertified components are not used to replace certified components. This would require labeling the components and may also require restricting the sales and requiring the ultimate purchaser to agree to not use the components inappropriately. This requirement does not apply for components that are clearly not intended for use with fuels.

(3) *Applicability of the tampering prohibition.* If a fuel tank or fuel line needing replacement was certified to meet the emission standards in this part with a family emission limit below the otherwise applicable standard, the new replacement fuel tank or fuel line must be certified to current emission standards, but need not be certified with the same or lower family emission limit to avoid violating the tampering prohibition in 40 CFR 1068.101(b)(1).

(c) [Reserved]

(d) Manufacturers that generate or use evaporative emission credits related to Marine SI engines in 40 CFR part 1045 or Small SI engines in 40 CFR part 1054 are subject to the emission standards for which they are generating or using evaporative emission credits. These engines or equipment must therefore be covered by a valid certificate of conformity showing compliance with emission-credit provisions before being introduced into U.S. commerce to avoid violating the prohibition of 40 CFR 1068.101(a).

(e) If there is no valid certificate of conformity for any given evaporative emission standard for new equipment, the manufacturers of the engine, equipment and fuel-system components are each liable for violations of the prohibited acts with respect to the fuel systems and fuel-system components they have introduced into U.S. commerce, including fuel systems and fuel-system components installed in engines or equipment at the time the engines or equipment are introduced into U.S. commerce.

(f) If you manufacture fuel lines or fuel tanks that are subject to the requirements of this part as described in paragraph (a) of this section, 40 CFR 1068.101(a) does not prohibit you from

shipping your products directly to an equipment manufacturer or another manufacturer from which you have received a written commitment to be responsible for certifying the components as required under this part 1060. This includes SHED-based certification of Small SI equipment as described in § 1060.105. If you ship fuel lines or fuel tanks under this paragraph (f), you must include documentation that accompanies the shipped products identifying the name and address of the company receiving shipment and stating that the fuel lines or fuel tanks are exempt under the provisions of 40 CFR 1060.601(f).

(g) If new evaporative emission standards apply in a given model year, your equipment in that model year must have fuel-system components that are certified to the new standards, except that you may continue to use up your normal inventory of earlier fuel-system components that were built before the date of the new or changed standards. For example, if your normal inventory practice is to keep on hand a one-month supply of fuel tanks based on your upcoming production schedules, and a new tier of standards starts to apply for the 2012 model year, you may order fuel tanks based on your normal inventory requirements late in the fuel tank manufacturer's 2011 model year and install those fuel tanks in your equipment, regardless of the date of installation. Also, if your model year starts before the end of the calendar year preceding new standards, you may use fuel-system components from the previous model year (or uncertified components if no standards were in place) for those units you produce before January 1 of the year that new standards apply. If emission standards do not change in a given model year, you may continue to install fuel-system components from the previous model year without restriction. You may not circumvent the provisions of 40 CFR 1068.101(a)(1) by stockpiling fuel-system components that were built before new or changed standards take effect.

(h) If equipment manufacturers hold certificates of conformity for their equipment but they use only fuel-system components that have been certified by other companies, they may satisfy their defect-reporting obligations by tracking the information described in 40 CFR 1068.501(b)(1) related to possible defects, reporting this information to the appropriate component manufacturers, and keeping these records for eight years. Such equipment manufacturers will not be considered in violation of 40 CFR 1068.101(b)(6) for failing to perform investigations, make calculations, or submit reports to EPA as specified in 40 CFR 1068.501. *See* § 1060.5(a).

[73 FR 59298, Oct. 8, 2008, as amended at 75 FR 23027, Apr. 30, 2010]

§ 1060.605 Exemptions from evaporative emission standards.

(a) Except as specified in the exhaust standard-setting part and paragraph (b) of this section, equipment using an engine that is exempt from exhaust emission standards under the provisions in 40 CFR part 1068, subpart C or D, is also exempt from the requirements of this part 1060. For example, engines or equipment exempted from exhaust emission standards for purposes of national security do not need to meet evaporative emission standards. Also, any engine that is exempt from emission standards because it will be used solely for competition does not need to meet evaporative emission standards. Equipment that is exempt from all exhaust emission standards under the standard-setting part are also exempt from the requirements of this part 1060; however, this does not apply for engines that must meet a less stringent exhaust emission standard as a condition of the exemption.

(b) Engines produced under the replacement-engine exemption in 40 CFR 1068.240 must use fuel-system components that meet the evaporative emission standards based on the model year of the engine being replaced subject to the provisions of 40 CFR 1068.265. If no evaporative emission standards applied at that time, no requirements related to evaporative emissions apply to the new engine. Installing a replacement engine does not change the applicability of requirements for the equipment into which the replacement engine is installed.

(c) Engines or equipment that are temporarily exempt from EPA exhaust emission standards are also exempt from the requirements of this part 1060 for the same period as the exhaust exemption.

(d) For equipment powered by more than one engine, all the engines installed in the equipment must be exempt from all applicable EPA exhaust emission standards for the equipment to also be exempt under paragraph (a) or (b) of this section.

(e) In unusual circumstances, we may exempt components or equipment from the requirements of this part 1060 even if the equipment is powered by one or more engines that are subject to EPA exhaust emission standards. See 40 CFR part 1068. Such exemptions will be limited to:

(1) Testing. See 40 CFR 1068.210.

(2) National security. See 40 CFR 1068.225.

(3) Economic hardship. See 40 CFR 1068.245 and 1068.250.

(f) Evaporative emission standards generally apply based on the model year of the equipment, which is determined by the equipment's date of final assembly. However, in the first year of new emission standards, equipment manufacturers may apply evaporative emission standards based on the model year of the engine as shown on the engine's emission control information label. For example, for fuel tank permeation standards starting in 2012, equipment manufacturers may order a batch of 2011 model year engines for installation in 2012 model year equipment, subject to the anti-stockpiling provisions of 40 CFR 1068.105(a). The equipment with the 2011 model year engines would not need to meet fuel tank permeation standards as long as the equipment is fully assembled by December 31, 2012.

§ 1060.640 What special provisions apply to branded equipment?

The following provisions apply if you identify the name and trademark of another company instead of your own on your emission control information label for equipment, as provided by §§ 1060.135 and 1060.137:

(a) You must have a contractual agreement with the other company that obligates that company to take the following steps:

(1) Meet the emission warranty requirements that apply under § 1060.120. This may involve a separate agreement involving reimbursement of warranty-related expenses.

(2) Report all warranty-related information to the certificate holder.

(b) In your application for certification, identify the company whose trademark you will use and describe the arrangements you have made to meet your requirements under this section.

(c) You remain responsible for meeting all the requirements of this chapter, including warranty and defect-reporting provisions.

Subpart H—Averaging, Banking, and Trading Provisions

§ 1060.701 Applicability.

(a) You are allowed to comply with the emission standards in this part with evaporative emission credits only if the exhaust standard-setting part explicitly allows it for evaporative emissions.

(b) The following exhaust standard-setting parts allow some use of evaporative emission credits:

(1) 40 CFR part 1045 for marine vessels.

(2) 40 CFR part 1051 for recreational vehicles.

(3) 40 CFR part 1054 for Small SI equipment.

(c) As specified in 40 CFR part 1048, there is no allowance to generate or use emission credits with Large SI equipment.

§ 1060.705 How do I certify components to an emission level other than the standard under this part or use such components in my equipment?

As specified in this section, a fuel-system component may be certified to a family emission limit (FEL) instead of the otherwise applicable emission standard. Note that the exhaust standard-setting part may apply maximum values for an FEL (i.e., FEL caps).

(a) *Requirements for certifying component manufacturers.* See subpart C of this part for instructions regarding the

general requirements for certifying components.

(1) When you submit your application for certification, indicate the FEL to which your components will be certified. This FEL will serve as the applicable standard for your component, and the equipment that uses the component. For example, when the regulations of this part use the phrase ''demonstrate compliance with the applicable emission standard'' it will mean ''demonstrate compliance with the FEL'' for your component.

(2) You may not change the FEL for an emission family. To specify a different FEL for your components, you must send a new application for certification for a new emission family.

(3) Unless your FEL is below all emission standards that could potentially apply, you must ensure that all equipment manufacturers that will use your component are aware of the limitations regarding the conditions under which they may use your component.

(4) It is your responsibility to read the instructions relative to emission-credit provisions in the standard-setting parts identified in § 1060.1.

(b) *Requirements for equipment manufacturers.* See subpart C of this part for instructions regarding your ability to rely on the component manufacturer's certificate.

(1) The FEL of the component will serve as the applicable standard for your equipment.

(2) You may not specify more than one FEL for an emission family at one time; however, you may change the FEL during the model year as described in § 1060.225(f).

(3) If the FEL is above the emission standard you must ensure that the exhaust standard-setting part allows you to use evaporative emission credits to comply with emission standards and that you will have an adequate source of evaporative emission credits. You must certify your equipment as specified in § 1060.201 and the rest of subpart C of this part.

Subpart I—Definitions and Other Reference Information

§ 1060.801 What definitions apply to this part?

The following definitions apply to this part. The definitions apply to all subparts unless we note otherwise. All undefined terms have the meaning the Clean Air Act gives to them. The definitions follow:

Accuracy and precision means the sum of accuracy and repeatability, as defined in 40 CFR 1065.1001. For example, if a measurement device is determined to have an accuracy of ±1% and a repeatability of ±2%, then its accuracy and precision would be ±3%.

Adjustable parameter means any device, system, or element of design that someone can adjust and that, if adjusted, may affect emissions. You may ask us to exclude a parameter if you show us that it will not be adjusted in use in a way that affects emissions.

Applicable emission standard or *applicable standard* means an emission standard to which a fuel-system component is subject. Additionally, if a fuel-system component has been or is being certified to another standard or FEL, *applicable emission standard* means the FEL or other standard to which the fuel-system component has been or is being certified. This definition does not apply to subpart H of this part.

Canister working capacity means the measured amount of hydrocarbon vapor that can be stored in a canister as specified in § 1060.240(e)(2)(i).

Carbon working capacity means the measured amount of hydrocarbon vapor that can be stored in a given volume of carbon when tested according to ASTM D5228 (incorporated by reference in § 1060.810). See § 1060.240(e)(2)(ii).

Certification means relating to the process of obtaining a certificate of conformity for an emission family that complies with the emission standards and requirements in this part.

Certified emission level means the highest official emission result in an emission family.

Clean Air Act means the Clean Air Act, as amended, 42 U.S.C. 7401–7671q.

Cold-weather equipment is limited to the following types of handheld equipment: Chainsaws, cut-off saws, clearing saws, brush cutters with engines at or above 40cc, commercial earth and wood drills, and ice augers. This includes earth augers if they are also marketed as ice augers.

Configuration means a unique combination of hardware (material, geometry, and size) and calibration within an emission family. Units within a single configuration differ only with respect to normal production variability.

Date of manufacture, means one of the following with respect to equipment:

(1) For outboard engines with undercowl fuel tanks and for vessels equipped with outboard engines and installed fuel tanks, *date of manufacture* means the date on which the fuel tank is installed.

(2) For all other equipment, *date of manufacture* has the meaning given in 40 CFR 1068.30.

Days means calendar days unless otherwise specified. For example, when we specify working days we mean calendar days, excluding weekends and U.S. national holidays.

Designated Compliance Officer means the Manager, Heavy-Duty and Nonroad Engine Group (6405-J), U.S. Environmental Protection Agency, 1200 Pennsylvania Ave., NW., Washington, DC 20460.

Detachable fuel line means a fuel line or fuel line assembly intended to be used with a portable nonroad fuel tank and which is connected by special fittings to the fuel tank and/or engine for easy disassembly. Fuel lines that require a wrench or other tools to disconnect are not considered detachable fuel lines. Fuel lines that are labeled or marketed as USCG Type B1 fuel line as specified in 33 CFR 183.540 are not considered detachable fuel lines if they are sold to the ultimate purchaser without quick-connect fittings or similar hardware.

Diurnal emissions means evaporative emissions that occur as a result of venting fuel tank vapors during daily temperature changes while the engine is not operating.

Effective length-to-diameter ratio means the mean vapor path length of a carbon canister divided by the effective diameter of that vapor path. The effective diameter is the diameter of a circle with the same cross-sectional area as the average cross-sectional area of the carbon canister's vapor path.

Emission control system means any device, system, or element of design that controls or reduces the regulated evaporative emissions from a piece of nonroad equipment.

Emission-data unit means a fuel line, fuel tank, fuel system, or fuel-system component that is tested for certification. This includes components tested by EPA.

Emission family has the meaning given in § 1060.230.

Emission-related maintenance means maintenance that substantially affects emissions or is likely to substantially affect emission deterioration.

Equipment means vehicles, marine vessels, and other types of nonroad equipment that are subject to this part's requirements.

Evaporative means relating to fuel emissions that result from permeation of fuel through the fuel-system materials or from ventilation of the fuel system.

Exhaust standard-setting part means the part in the Code of Federal Regulations that contains exhaust emission standards for a particular piece of equipment (or the engine in that piece of equipment). For example, the exhaust standard-setting part for off-highway motorcycles is 40 CFR part 1051. Exhaust standard-setting parts may include evaporative emission requirements or describe how the requirements of this part 1060 apply.

Exposed gasket surface area means the surface area of the gasket inside the fuel tank that is exposed to fuel or fuel vapor. For the purposes of calculating exposed surface area of a gasket, the thickness of the gasket and the outside dimension of the opening being sealed are used. Gasket overhang into the fuel tank should be ignored for the purpose of this calculation.

Family emission limit (FEL) means an emission level declared by the manufacturer to serve in place of an otherwise applicable emission standard under an ABT program specified by the exhaust standard-setting part. The

family emission limit must be expressed to the same number of decimal places as the emission standard it replaces. The family emission limit serves as the emission standard for the emission family with respect to all required testing.

Fuel CE10 has the meaning given in § 1060.515(a).

Fuel line means hoses or tubing designed to contain liquid fuel. The exhaust standard-setting part may further specify which types of hoses and tubing are subject to the standards of this part.

Fuel system means all components involved in transporting, metering, and mixing the fuel from the fuel tank to the combustion chamber(s), including the fuel tank, fuel tank cap, fuel pump, fuel filters, fuel lines, carburetor or fuel-injection components, and all fuel-system vents. In the case where the fuel tank cap or other components (excluding fuel lines) are directly mounted on the fuel tank, they are considered to be a part of the fuel tank.

Fuel type means a general category of fuels such as gasoline or natural gas. There can be multiple grades within a single fuel type, such as premium gasoline, regular gasoline, or gasoline with 10 percent ethanol.

Gasoline means one of the following:

(1) For in-use fuels, *gasoline* means fuel that is commonly and commercially know as gasoline, including ethanol blends.

(2) For testing, *gasoline* has the meaning given in subpart F of this part.

Good engineering judgment means judgments made consistent with generally accepted scientific and engineering principles and all available relevant information. See 40 CFR 1068.5 for the administrative process we use to evaluate good engineering judgment.

High-permeability material means any nonmetal material that does not qualify as low-permeability material.

Installed marine fuel line means a fuel line designed for delivering fuel to a Marine SI engine that does not meet the definition of *portable marine fuel line*.

Installed marine fuel tank means a fuel tank designed for delivering fuel to a Marine SI engine that does not meet the definition of *portable marine fuel tanks*.

Large SI means relating to engines that are subject to evaporative emission standards in 40 CFR part 1048.

Low-permeability material means, for gaskets, a material with permeation emission rates at or below 10 (g-mm)/m^2/day when measured according to SAE J2659 (incorporated by reference in § 1060.810), where the test temperature is 23 °C, the test fuel is Fuel CE10, and testing immediately follows a four-week preconditioning soak with the test fuel.

Manufacture means the physical and engineering process of designing, constructing, and assembling an engine, piece of nonroad equipment, or fuel-system components subject to the requirements of this part.

Manufacturer has the meaning given in section 216(1) of the Clean Air Act (42 U.S.C. 7550(1)). In general, this term includes:

(1) Any person who manufactures an engine or piece of nonroad equipment for sale in the United States or otherwise introduces a new nonroad engine or a piece of new nonroad equipment into U.S. commerce.

(2) Any person who manufactures a fuel-system component for an engine subject to the requirements of this part as described in § 1060.1(a).

(3) Importers who import such products into the United States.

Marine SI means relating to vessels powered by engines that are subject to exhaust emission standards in 40 CFR part 1045.

Marine vessel has the meaning given in 40 CFR § 1045.801, which generally includes all nonroad equipment used as a means of transportation on water.

Model year means one of the following things:

(1) For equipment defined as ''new nonroad equipment'' under paragraph (1) of the definition of ''new nonroad engine,'' model year means one of the following:

(i) Calendar year.

(ii) Your annual new model production period if it is different than the calendar year. This must include January 1 of the calendar year for which the model year is named. It may not begin

before January 2 of the previous calendar year and it must end by December 31 of the named calendar year.

(2) For other equipment defined as ''new nonroad equipment'' under paragraph (2) of the definition of ''new nonroad engine,'' model year has the meaning given in the exhaust standard-setting part.

(3) For other equipment defined as ''new nonroad equipment'' under paragraph (3) or paragraph (4) of the definition of ''new nonroad engine,'' model year means the model year of the engine as defined in the exhaust standard-setting part.

New nonroad equipment means equipment meeting one or more of the following criteria:

(1) Nonroad equipment for which the ultimate purchaser has never received the equitable or legal title. The equipment is no longer new when the ultimate purchaser receives this title or the product is placed into service, whichever comes first.

(2) Nonroad equipment that is defined as new under the exhaust standard-setting part. (Note: equipment that is not defined as new under the exhaust standard-setting part may be defined as new under this definition of ''new nonroad equipment.'')

(3) Nonroad equipment with an engine that becomes new (as defined in the exhaust standard-setting part) while installed in the equipment. The equipment is no longer new when it is subsequently placed into service. This paragraph (3) does not apply if the engine becomes new before being installed in the equipment.

(4) Nonroad equipment not covered by a certificate of conformity issued under this part at the time of importation and manufactured after the requirements of this part start to apply (see §1060.1). The equipment is no longer new when it is subsequently placed into service. Importation of this kind of new nonroad equipment is generally prohibited by 40 CFR part 1068.

Nominal capacity means a fuel tank's volume as specified by the fuel tank manufacturer, using at least two significant figures, based on the maximum volume of fuel the tank can hold with standard refueling techniques.

Nonroad engine has the meaning we give in 40 CFR 1068.30. In general this means all internal-combustion engines except motor vehicle engines, stationary engines, engines used solely for competition, or engines used in aircraft. This part does not apply to all nonroad engines (see §1060.1).

Nonroad equipment means a piece of equipment that is powered by or intended to be powered by one or more nonroad engines. Note that §§1060.5 and 1060.601 describes how we treat outboard engines, portable marine fuel tanks, and associated fuel-system components as nonroad equipment under this part 1060.

Nontrailerable boat means a vessel whose length is 26.0 feet or more, or whose width is more than 8.5 feet.

Official emission result means the measured emission rate for an emission-data unit.

Placed into service means put into initial use for its intended purpose.

Portable marine fuel line means a detachable fuel line that is used or intended to be used to supply fuel to a marine engine during operation. This also includes any fuel line labeled or marketed at USCG Type B1 fuel line as specified in 33 CFR 183.540, whether or not it includes detachable connecting hardware; this is often called universal fuel line.

Portable marine fuel tank means a portable fuel tank that is used or intended to be used to supply fuel to a marine engine during operation.

Portable nonroad fuel tank means a fuel tank that meets each of the following criteria:

(1) It has design features indicative of use in portable applications, such as a carrying handle and fuel line fitting that can be readily attached to and detached from a nonroad engine.

(2) It has a nominal fuel capacity of 12 gallons or less.

(3) It is designed to supply fuel to an engine while the engine is operating.

(4) It is not used or intended to be used to supply fuel to a marine engine.

Production period means the period in which a component or piece of equipment will be produced under a certificate of conformity. A given production period for an emission family may not

include components certified using different test data. A production period may not exceed five years for certified components. Note that the definition of model year includes specifications related to production periods for which a certificate is valid for equipment.

Recreational vehicle means vehicles that are subject to evaporative emission standards in 40 CFR part 1051. This generally includes engines that will be installed in recreational vehicles if the engines are certified separately under 40 CFR 1051.20.

Relating to as used in this section means relating to something in a specific, direct manner. This expression is used in this section only to define terms as adjectives and not to broaden the meaning of the terms.

Revoke has the meaning given in 40 CFR 1068.30. If we revoke a certificate or an exemption, you must apply for a new certificate or exemption before continuing to introduce the affected equipment into U.S. commerce.

Round means to round numbers according to standard procedures as specified in 40 CFR 1065.1001.

Running loss emissions means unburned fuel vapor that escapes from the fuel system to the ambient atmosphere while the engine is operating, excluding permeation emissions and diurnal emissions. Running loss emissions generally result from fuel-temperature increases caused by heat released from in-tank fuel pumps, fuel recirculation, or proximity to heat sources such as the engine or exhaust components.

Sealed means lacking openings to the atmosphere that would allow a measurable amount of liquid or vapor to leak out under normal operating pressures or other pressures specified in this part. For example, you may generally establish a maximum value for operating pressures based on the highest pressure you would observe from an installed fuel tank during continuous equipment operation on a sunny day with ambient temperatures of 35 °C. A fuel system may be considered to have no measurable leak if it does not release bubbles when held underwater at the identified tank pressure for 60 seconds. This determination presumes the use of good engineering judgment; for example, it would not be appropriate to test the fuel tank such that small leaks would avoid detection by collecting in a cavity created by holding the tank with a certain orientation. Sealed fuel systems may have openings for emission controls or for fuel lines needed to route fuel to the engine.

Small SI means relating to engines that are subject to emission standards in 40 CFR part 90 or 1054.

Structurally integrated nylon fuel tank means a fuel tank having all the following characteristics:

(1) The fuel tank is made of a polyamide material that does not contain more than 50 percent by weight of a reinforcing glass fiber or mineral filler and does not contain more than 10 percent by weight of impact modified polyamides that use rubberized agents such as EPDM rubber.

(2) The fuel tank must be used in a cut-off saw or chainsaw or be integrated into a major structural member where, as a single component, the fuel tank material is a primary structural/stress member for other major components such as the engine, transmission, or cutting attachment.

Subchapter U means 40 CFR parts 1000 through 1299.

Suspend has the meaning given in 40 CFR 1068.30. If we suspend a certificate, you may not introduce into U.S. commerce equipment from that emission family unless we reinstate the certificate or approve a new one. If we suspend an exemption, you may not introduce into U.S. commerce equipment that was previously covered by the exemption unless we reinstate the exemption.

Tare means to use a container or other reference mass to zero a balance before weighing a sample. Generally, this means placing the container or reference mass on the balance, allowing it to stabilize, then zeroing the balance without removing the container or reference mass. This allows you to use the balance to determine the difference in mass between the sample and the container or reference mass.

Test sample means the collection of fuel lines, fuel tanks, or fuel systems selected from the population of an emission family for emission testing. This may include certification testing or any kind of confirmatory testing.

Test unit means a piece of fuel line, a fuel tank, or a fuel system in a test sample.

Ultimate purchaser means, with respect to any new nonroad equipment, the first person who in good faith purchases such new nonroad equipment for purposes other than resale.

Ultraviolet light means electromagnetic radiation with a wavelength between 300 and 400 nanometers.

United States has the meaning given in 40 CFR 1068.30.

U.S.-directed production volume means the amount of equipment, subject to the requirements of this part, produced by a manufacturer for which the manufacturer has a reasonable assurance that sale was or will be made to ultimate purchasers in the United States.

Useful life means the period during which new nonroad equipment is required to comply with all applicable emission standards. See § 1060.101.

Void has the meaning given in 40 CFR 1068.30. In general this means to invalidate a certificate or an exemption both retroactively and prospectively.

Volatile liquid fuel means any fuel other than diesel or biodiesel that is a liquid at atmospheric pressure and has a Reid Vapor Pressure higher than 2.0 pounds per square inch.

We (us, our) means the Administrator of the Environmental Protection Agency and any authorized representatives.

Wintertime equipment means equipment using a wintertime engine, as defined in 40 CFR 1054.801. Note this definition applies only for Small SI equipment.

[73 FR 59298, Oct. 8, 2008, as amended at 75 FR 23027, Apr. 30, 2010]

§ 1060.805 What symbols, acronyms, and abbreviations does this part use?

The following symbols, acronyms, and abbreviations apply to this part:

° degree.
ASTM American Society for Testing and Materials.
C Celsius.
CFR Code of Federal Regulations.
EPA Environmental Protection Agency.
FEL family emission limit.
g gram.
gal gallon.
hr hour.
in inch.
kPa kilopascal.
kW kilowatt.
L liter.
m meter.
min minute.
mm millimeter.
psig pounds per square inch of gauge pressure.
SAE Society of Automotive Engineers.
SHED Sealed Housing for Evaporative Determination.
U.S. United States.
U.S.C. United States Code.
W watt.

§ 1060.810 What materials does this part reference?

Documents listed in this section have been incorporated by reference into this part. The Director of the Federal Register approved the incorporation by reference as prescribed in 5 U.S.C. 552(a) and 1 CFR part 51. Anyone may inspect copies at the U.S. EPA, Air and Radiation Docket and Information Center, 1301 Constitution Ave., NW., Room B102, EPA West Building, Washington, DC 20460 or at the National Archives and Records Administration (NARA). For information on the availability of this material at NARA, call 202–741–6030, or go to: *http://www.archives.gov/federal_register/code_of_federal_regulations/ibr_locations.html*.

(a) *ASTM material*. Table 1 to this section lists material from the American Society for Testing and Materials that we have incorporated by reference. The first column lists the number and name of the material. The second column lists the sections of this part where we reference it. Anyone may purchase copies of these materials from the American Society for Testing and Materials, 100 Barr Harbor Dr., P.O. Box C700, West Conshohocken, PA 19428 or *http://www.astm.com*. Table 1 follows:

TABLE 1 TO § 1060.810—ASTM MATERIALS

Document number and name	Part 1060 reference
ASTM D471–06, Standard Test Method for Rubber Property—Effect of Liquids (''ASTM D471'')	1060.515
ASTM D2862–97 (Reapproved 2004), Standard Test Method for Particle Size Distribution of Granular Activated Carbon (''ASTM D2862'')	1060.240
ASTM D3802–79 (Reapproved 2005), Standard Test Method for Ball-Pan Hardness of Activated Carbon (''ASTM D3802'')	1060.240
ASTM D4806–07, Standard Specification for Denatured Fuel Ethanol for Blending with Gasolines for Use as Automotive Spark-Ignition Engine Fuel (''ASTM D4806'')	1060.501
ASTM D5228–92 (Reapproved 2005), Standard Test Method for Determination of Butane Working Capacity of Activated Carbon (''ASTM D5228'')	1060.801

(b) *SAE material*. Table 2 to this section lists material from the Society of Automotive Engineers that we have incorporated by reference. The first column lists the number and name of the material. The second column lists the sections of this part where we reference it. Anyone may purchase copies of these materials from the Society of Automotive Engineers, 400 Commonwealth Drive, Warrendale, PA 15096 or *http://www.sae.org*. Table 2 follows:

TABLE 2 TO § 1060.810—SAE MATERIALS

Document number and name	Part 1060 reference
SAE J30, Fuel and Oil Hoses, June 1998	1060.515
SAE J1527, Marine Fuel Hoses, January 1993 (Issued 1985–12, Revised 1993–02)	1060.515
SAE J2260, Nonmetallic Fuel System Tubing with One or More Layers, November 2004	1060.510
SAE J2659, Test Method to Measure Fluid Permeation of Polymeric Materials by Speciation, December 2003	1060.801

(c) *California Air Resources Board material*. Table 3 to this section lists material from the California Air Resources Board that we have incorporated by reference. The first column lists the number and name of the material. The second column lists the sections of this part where we reference it. Anyone may obtain copies of these materials from California Air Resources Board, Haagen-Smit Laboratory, 9528 Telstar Avenue, El Monte, CA 91731–2990 or *http://www.arb.ca.gov*. Table 3 follows:

TABLE 3 TO § 1060.810—CALIFORNIA AIR RESOURCES BOARD MATERIALS

Document number and name	Part 1060 reference
Final Regulation Order, Article 1, Chapter 15, Division 3, Title 13, California Code of Regulations, July 26, 2004	1060.105, 1060.240

(d) *American Boat and Yacht Council Material*. Table 4 to this section lists material from the American Boat and Yacht Council that we have incorporated by reference. The first column lists the number and name of the material. The second column lists the sections of this part where we reference it. Anyone may purchase copies of these materials from the American Boat and Yacht Council, 613 Third Street, Suite 10, Annapolis, MD 21403 or *http://www.abycinc.org/*. Table 4 follows:

TABLE 4 TO § 1060.810—AMERICAN BOAT AND YACHT COUNCIL MATERIALS

Document No. and name	Part 1060 reference
ABYC H–25, Portable Marine Gasoline Fuel Systems, July 2010	1060.105

[73 FR 59298, Oct. 8, 2008, as amended at 75 FR 56482, Sept. 16, 2010]

§ 1060.815 What provisions apply to confidential information?

(a) Clearly show what you consider confidential by marking, circling, bracketing, stamping, or some other method.

(b) We will store your confidential information as described in 40 CFR part 2. Also, we will disclose it only as specified in 40 CFR part 2. This applies both to any information you send us and to any information we collect from inspections, audits, or other site visits.

(c) If you send us a second copy without the confidential information, we will assume it contains nothing confidential whenever we need to release information from it.

(d) If you send us information without claiming it is confidential, we may make it available to the public without further notice to you, as described in 40 CFR 2.204.

§ 1060.820 How do I request a hearing?

(a) You may request a hearing under certain circumstances as described elsewhere in this part. To do this, you must file a written request, including a description of your objection and any supporting data, within 30 days after we make a decision.

(b) For a hearing you request under the provisions of this part, we will approve your request if we find that your request raises a substantial factual issue.

(c) If we agree to hold a hearing, we will use the procedures specified in 40 CFR part 1068, subpart G.

§ 1060.825 What reporting and recordkeeping requirements apply under this part?

Under the Paperwork Reduction Act (44 U.S.C. 3501 *et seq*), the Office of Management and Budget approves the reporting and recordkeeping specified in the applicable regulations. The following items illustrate the kind of reporting and recordkeeping we require for products regulated under this part:

(a) We specify the following requirements related to equipment certification in this part 1060:

(1) In 40 CFR 1060.20 we give an overview of principles for reporting information.

(2) In 40 CFR part 1060, subpart C, we identify a wide range of information required to certify engines.

(3) In 40 CFR 1060.301 we require manufacturers to make engines or equipment available for our testing if we make such a request.

(4) In 40 CFR 1060.505 we specify information needs for establishing various changes to published test procedures.

(b) We specify the following requirements related to the general compliance provisions in 40 CFR part 1068:

(1) In 40 CFR 1068.5 we establish a process for evaluating good engineering judgment related to testing and certification.

(2) In 40 CFR 1068.25 we describe general provisions related to sending and keeping information.

(3) In 40 CFR 1068.27 we require manufacturers to make equipment available for our testing or inspection if we make such a request.

(4) In 40 CFR 1068.105 we require equipment manufacturers to keep certain records related to duplicate labels from engine manufacturers.

(5) [Reserved]

(6) In 40 CFR part 1068, subpart C, we identify several reporting and recordkeeping items for making demonstrations and getting approval related to various exemptions.

(7) In 40 CFR part 1068, subpart D, we identify several reporting and recordkeeping items for making demonstrations and getting approval related to importing equipment.

(8) In 40 CFR 1068.450 and 1068.455 we specify certain records related to testing production-line products in a selective enforcement audit.

(9) In 40 CFR 1068.501 we specify certain records related to investigating and reporting emission-related defects.

(10) In 40 CFR 1068.525 and 1068.530 we specify certain records related to recalling nonconforming equipment.

PART 1065—ENGINE-TESTING PROCEDURES

Subpart A—Applicability and General Provisions

Sec.
1065.1 Applicability.
1065.2 Submitting information to EPA under this part.
1065.5 Overview of this part 1065 and its relationship to the standard-setting part.
1065.10 Other procedures.
1065.12 Approval of alternate procedures.
1065.15 Overview of procedures for laboratory and field testing.
1065.20 Units of measure and overview of calculations.
1065.25 Recordkeeping.

Subpart B—Equipment Specifications

1065.101 Overview.
1065.110 Work inputs and outputs, accessory work, and operator demand.
1065.120 Fuel properties and fuel temperature and pressure.
1065.122 Engine cooling and lubrication.
1065.125 Engine intake air.
1065.127 Exhaust gas recirculation.
1065.130 Engine exhaust.
1065.140 Dilution for gaseous and PM constituents.
1065.145 Gaseous and PM probes, transfer lines, and sampling system components.
1065.150 Continuous sampling.
1065.170 Batch sampling for gaseous and PM constituents.
1065.190 PM-stabilization and weighing environments for gravimetric analysis.
1065.195 PM-stabilization environment for in-situ analyzers.

Subpart C—Measurement Instruments

1065.201 Overview and general provisions.
1065.202 Data updating, recording, and control.
1065.205 Performance specifications for measurement instruments.

MEASUREMENT OF ENGINE PARAMETERS AND AMBIENT CONDITIONS

1065.210 Work input and output sensors.
1065.215 Pressure transducers, temperature sensors, and dewpoint sensors.

FLOW-RELATED MEASUREMENTS

1065.220 Fuel flow meter.
1065.225 Intake-air flow meter.
1065.230 Raw exhaust flow meter.
1065.240 Dilution air and diluted exhaust flow meters.
1065.245 Sample flow meter for batch sampling.
1065.248 Gas divider.

CO AND CO_2 MEASUREMENTS

1065.250 Nondispersive infra-red analyzer.

HYDROCARBON MEASUREMENTS

1065.260 Flame ionization detector.
1065.265 Nonmethane cutter.
1065.267 Gas chromatograph.

NO_x AND N_2O MEASUREMENTS

1065.270 Chemiluminescent detector.
1065.272 Nondispersive ultraviolet analyzer.
1065.275 N_2O measurement devices.

O_2 MEASUREMENTS

1065.280 Paramagnetic and magnetopneumatic O_2 detection analyzers.

AIR-TO-FUEL RATIO MEASUREMENTS

1065.284 Zirconia (ZrO_2) analyzer.

PM MEASUREMENTS

1065.290 PM gravimetric balance.
1065.295 PM inertial balance for field-testing analysis.

Subpart D—Calibrations and Verifications

1065.301 Overview and general provisions.
1065.303 Summary of required calibration and verifications.
1065.305 Verifications for accuracy, repeatability, and noise.
1065.307 Linearity verification.
1065.308 Continuous gas analyzer system-response and updating-recording verification—for gas analyzers not continuously compensated for other gas species.
1065.309 Continuous gas analyzer system-response and updating-recording verification—for gas analyzers continuously compensated for other gas species.

MEASUREMENT OF ENGINE PARAMETERS AND AMBIENT CONDITIONS

1065.310 Torque calibration.
1065.315 Pressure, temperature, and dewpoint calibration.

FLOW-RELATED MEASUREMENTS

1065.320 Fuel-flow calibration.
1065.325 Intake-flow calibration.
1065.330 Exhaust-flow calibration.
1065.340 Diluted exhaust flow (CVS) calibration.
1065.341 CVS and batch sampler verification (propane check).
1065.342 Sample dryer verification.
1065.345 Vacuum-side leak verification.

CO AND CO_2 MEASUREMENTS

1065.350 H_2O interference verification for CO_2 NDIR analyzers.

1065.355 H_2O and CO_2 interference verification for CO NDIR analyzers.

HYDROCARBON MEASUREMENTS

1065.360 FID optimization and verification.
1065.362 Non-stoichiometric raw exhaust FID O_2 interference verification.
1065.365 Nonmethane cutter penetration fractions.

NO_X AND N_2O MEASUREMENTS

1065.370 CLD CO_2 and H_2O quench verification.
1065.372 NDUV analyzer HC and H_2O interference verification.
1065.375 Interference verification for N_2O analyzers.
1065.376 Chiller NO_2 penetration.
1065.378 NO_2-to-NO converter conversion verification.

PM MEASUREMENTS

1065.390 PM balance verifications and weighing process verification.
1065.395 Inertial PM balance verifications.

Subpart E—Engine Selection, Preparation, and Maintenance

1065.401 Test engine selection.
1065.405 Test engine preparation and maintenance.
1065.410 Maintenance limits for stabilized test engines.
1065.415 Durability demonstration.

Subpart F—Performing an Emission Test Over Specified Duty Cycles

1065.501 Overview.
1065.510 Engine mapping.
1065.512 Duty cycle generation.
1065.514 Cycle-validation criteria for operation over specified duty cycles.
1065.520 Pre-test verification procedures and pre-test data collection.
1065.525 Engine starting, restarting, and shutdown.
1065.526 Repeating void modes or test intervals.
1065.530 Emission test sequence.
1065.545 Validation of proportional flow control for batch sampling.
1065.546 Validation of minimum dilution ratio for PM batch sampling.
1065.550 Gas analyzer range validation, drift validation, and drift correction.
1065.590 PM sampling media (e.g., filters) preconditioning and tare weighing.
1065.595 PM sample post-conditioning and total weighing.

Subpart G—Calculations and Data Requirements

1065.601 Overview.
1065.602 Statistics.
1065.610 Duty cycle generation.
1065.630 1980 international gravity formula.
1065.640 Flow meter calibration calculations.
1065.642 SSV, CFV, and PDP molar flow rate calculations.
1065.644 Vacuum-decay leak rate.
1065.645 Amount of water in an ideal gas.
1065.650 Emission calculations.
1065.655 Chemical balances of fuel, intake air, and exhaust.
1065.659 Removed water correction.
1065.660 THC, NMHC, and CH_4 determination.
1065.665 THCE and NMHCE determination.
1065.667 Dilution air background emission correction.
1065.670 NO_X intake-air humidity and temperature corrections.
1065.672 Drift correction.
1065.675 CLD quench verification calculations.
1065.690 Buoyancy correction for PM sample media.
1065.695 Data requirements.

Subpart H—Engine Fluids, Test Fuels, Analytical Gases and Other Calibration Standards

1065.701 General requirements for test fuels.
1065.703 Distillate diesel fuel.
1065.705 Residual and intermediate residual fuel.
1065.710 Gasoline.
1065.715 Natural gas.
1065.720 Liquefied petroleum gas.
1065.740 Lubricants.
1065.745 Coolants.
1065.750 Analytical Gases.
1065.790 Mass standards.

Subpart I—Testing with Oxygenated Fuels

1065.801 Applicability.
1065.805 Sampling system.
1065.845 Response factor determination.
1065.850 Calculations.

Subpart J—Field Testing and Portable Emission Measurement Systems

1065.901 Applicability.
1065.905 General provisions.
1065.910 PEMS auxiliary equipment for field testing.
1065.915 PEMS instruments.
1065.920 PEMS calibrations and verifications.
1065.925 PEMS preparation for field testing.
1065.930 Engine starting, restarting, and shutdown.
1065.935 Emission test sequence for field testing.
1065.940 Emission calculations.

Subpart K—Definitions and Other Reference Information

1065.1001 Definitions.
1065.1005 Symbols, abbreviations, acronyms, and units of measure.
1065.1010 Reference materials.

AUTHORITY: 42 U.S.C. 7401–7671q.

SOURCE: 70 FR 40516, July 13, 2005, unless otherwise noted.

Subpart A—Applicability and General Provisions

§ 1065.1 Applicability.

(a) This part describes the procedures that apply to testing we require for the following engines or for vehicles using the following engines:

(1) Locomotives we regulate under 40 CFR part 1033. For earlier model years, manufacturers may use the test procedures in this part or those specified in 40 CFR part 92 according to § 1065.10.

(2) Model year 2010 and later heavy-duty highway engines we regulate under 40 CFR part 86. For earlier model years, manufacturers may use the test procedures in this part or those specified in 40 CFR part 86, subpart N, according to § 1065.10.

(3) Nonroad diesel engines we regulate under 40 CFR part 1039 and stationary diesel engines that are certified to the standards in 40 CFR part 1039 as specified in 40 CFR part 60, subpart IIII. For earlier model years, manufacturers may use the test procedures in this part or those specified in 40 CFR part 89 according to § 1065.10.

(4) Marine diesel engines we regulate under 40 CFR part 1042. For earlier model years, manufacturers may use the test procedures in this part or those specified in 40 CFR part 94 according to § 1065.10.

(5) Marine spark-ignition engines we regulate under 40 CFR part 1045. For earlier model years, manufacturers may use the test procedures in this part or those specified in 40 CFR part 91 according to § 1065.10.

(6) Large nonroad spark-ignition engines we regulate under 40 CFR part 1048, and stationary engines that are certified to the standards in 40 CFR part 1048 or as otherwise specified in 40 CFR part 60, subpart JJJJ.

(7) Vehicles we regulate under 40 CFR part 1051 (such as snowmobiles and off-highway motorcycles) based on engine testing. See 40 CFR part 1051, subpart F, for standards and procedures that are based on vehicle testing.

(8) Small nonroad spark-ignition engines we regulate under 40 CFR part 1054 and stationary engines that are certified to the standards in 40 CFR part 1054 as specified in 40 CFR part 60, subpart JJJJ. For earlier model years, manufacturers may use the test procedures in this part or those specified in 40 CFR part 90 according to § 1065.10.

(b) The procedures of this part may apply to other types of engines, as described in this part and in the standard-setting part.

(c) The term ''you'' means anyone performing testing under this part other than EPA.

(1) This part is addressed primarily to manufacturers of engines, vehicles, equipment, and vessels, but it applies equally to anyone who does testing under this part for such manufacturers.

(2) This part applies to any manufacturer or supplier of test equipment, instruments, supplies, or any other goods or services related to the procedures, requirements, recommendations, or options in this part.

(d) Paragraph (a) of this section identifies the parts of the CFR that define emission standards and other requirements for particular types of engines. In this part, we refer to each of these other parts generically as the ''standard-setting part.'' For example, 40 CFR part 1051 is always the standard-setting part for snowmobiles. Note that while 40 CFR part 86 is the standard-setting part for heavy-duty highway engines, this refers specifically to 40 CFR part 86, subpart A, and to certain portions of 40 CFR part 86, subpart N, as described in 40 CFR 86.1301.

(e) Unless we specify otherwise, the terms ''procedures'' and ''test procedures'' in this part include all aspects of engine testing, including the equipment specifications, calibrations, calculations, and other protocols and procedural specifications needed to measure emissions.

(f) For vehicles, equipment, or vessels subject to this part and regulated under vehicle-based, equipment-based,

or vessel-based standards, use good engineering judgment to interpret the term ''engine'' in this part to include vehicles, equipment, or vessels, where appropriate.

(g) For additional information regarding these test procedures, visit our Web site at *http://www.epa.gov*, and in particular *http://www.epa.gov/nvfel/testing/regulations.htm*.

[73 FR 37288, June 30, 2008, as amended at 73 FR 59321, Oct. 8, 2008; 75 FR 23028, Apr. 30, 2010]

EFFECTIVE DATE NOTE: At 76 FR 37977, June 28, 2011, § 1065.1 was amended by revising paragraphs (a)(3) and (a)(4), effective August 29, 2011. For the convenience of the user, the revised text is set forth as follows:

§ 1065.1 Applicability.

(a) * * *

(3) Nonroad diesel engines we regulate under 40 CFR part 1039 and stationary compression-ignition engines that are certified to the standards in 40 CFR part 1039, as specified in 40 CFR part 60, subpart IIII. For earlier model years, manufacturers may use the test procedures in this part or those specified in 40 CFR part 89 according to § 1065.10.

(4) Marine diesel engines we regulate under 40 CFR part 1042 and stationary compression-ignition engines that are certified to the standards in 40 CFR part 1042, as specified in 40 CFR part 60, subpart IIII. For earlier model years, manufacturers may use the test procedures in this part or those specified in 40 CFR part 94 according to § 1065.10.

* * * * *

§ 1065.2 Submitting information to EPA under this part.

(a) You are responsible for statements and information in your applications for certification, requests for approved procedures, selective enforcement audits, laboratory audits, production-line test reports, field test reports, or any other statements you make to us related to this part 1065. If you provide statements or information to someone for submission to EPA, you are responsible for these statements and information as if you had submitted them to EPA yourself.

(b) In the standard-setting part and in 40 CFR 1068.101, we describe your obligation to report truthful and complete information and the consequences of failing to meet this obligation. *See* also 18 U.S.C. 1001 and 42 U.S.C. 7413(c)(2). This obligation applies whether you submit this information directly to EPA or through someone else.

(c) We may void any certificates or approvals associated with a submission of information if we find that you intentionally submitted false, incomplete, or misleading information. For example, if we find that you intentionally submitted incomplete information to mislead EPA when requesting approval to use alternate test procedures, we may void the certificates for all engines families certified based on emission data collected using the alternate procedures. This would also apply if you ignore data from incomplete tests or from repeat tests with higher emission results.

(d) We may require an authorized representative of your company to approve and sign the submission, and to certify that all of the information submitted is accurate and complete. This includes everyone who submits information, including manufacturers and others.

(e) See 40 CFR 1068.10 for provisions related to confidential information. Note however that under 40 CFR 2.301, emission data is generally not eligible for confidential treatment.

(f) Nothing in this part should be interpreted to limit our ability under Clean Air Act section 208 (42 U.S.C. 7542) to verify that engines conform to the regulations.

[73 FR 37289, June 30, 2008, as amended at 75 FR 23028, Apr. 30, 2010]

§ 1065.5 Overview of this part 1065 and its relationship to the standard-setting part.

(a) This part specifies procedures that apply generally to testing various categories of engines. See the standard-setting part for directions in applying specific provisions in this part for a particular type of engine. Before using this part's procedures, read the standard-setting part to answer at least the following questions:

(1) What duty cycles must I use for laboratory testing?

(2) Should I warm up the test engine before measuring emissions, or do I need to measure cold-start emissions

during a warm-up segment of the duty cycle?

(3) Which exhaust constituents do I need to measure? Measure all exhaust constituents that are subject to emission standards, any other exhaust constituents needed for calculating emission rates, and any additional exhaust constituents as specified in the standard-setting part. Alternatively, you may omit the measurement of N_2O and CH_4 for an engine, provided it is not subject to an N_2O or CH_4 emission standard. If you omit the measurement of N_2O and CH_4, you must provide other information and/or data that will give us a reasonable basis for estimating the engine's emission rates.

(4) Do any unique specifications apply for test fuels?

(5) What maintenance steps may I take before or between tests on an emission-data engine?

(6) Do any unique requirements apply to stabilizing emission levels on a new engine?

(7) Do any unique requirements apply to test limits, such as ambient temperatures or pressures?

(8) Is field testing required or allowed, and are there different emission standards or procedures that apply to field testing?

(9) Are there any emission standards specified at particular engine-operating conditions or ambient conditions?

(10) Do any unique requirements apply for durability testing?

(b) The testing specifications in the standard-setting part may differ from the specifications in this part. In cases where it is not possible to comply with both the standard-setting part and this part, you must comply with the specifications in the standard-setting part. The standard-setting part may also allow you to deviate from the procedures of this part for other reasons.

(c) The following table shows how this part divides testing specifications into subparts:

TABLE 1 OF § 1065.5—DESCRIPTION OF PART 1065 SUBPARTS

This subpart	Describes these specifications or procedures
Subpart A	Applicability and general provisions.
Subpart B	Equipment for testing.
Subpart C	Measurement instruments for testing.
Subpart D	Calibration and performance verifications for measurement systems.
Subpart E	How to prepare engines for testing, including service accumulation.
Subpart F	How to run an emission test over a predetermined duty cycle.
Subpart G	Test procedure calculations.
Subpart H	Fuels, engine fluids, analytical gases, and other calibration standards.
Subpart I	Special procedures related to oxygenated fuels.
Subpart J	How to test with portable emission measurement systems (PEMS).

[73 FR 37289, June 30, 2008, as amended at 74 FR 56511, Oct. 30, 2009]

§ 1065.10 Other procedures.

(a) *Your testing*. The procedures in this part apply for all testing you do to show compliance with emission standards, with certain exceptions listed in this section. In some other sections in this part, we allow you to use other procedures (such as less precise or less accurate procedures) if they do not affect your ability to show that your engines comply with the applicable emission standards. This generally requires emission levels to be far enough below the applicable emission standards so that any errors caused by greater imprecision or inaccuracy do not affect your ability to state unconditionally that the engines meet all applicable emission standards.

(b) *Our testing*. These procedures generally apply for testing that we do to determine if your engines comply with applicable emission standards. We may perform other testing as allowed by the Act.

(c) *Exceptions*. We may allow or require you to use procedures other than those specified in this part in the following cases, which may apply to laboratory testing, field testing, or both. We intend to publicly announce when we allow or require such exceptions. All of the test procedures noted here as exceptions to the specified procedures are considered generically as ''other

procedures.'' Note that the terms ''special procedures'' and ''alternate procedures'' have specific meanings; ''special procedures'' are those allowed by §1065.10(c)(2) and ''alternate procedures'' are those allowed by §1065.10(c)(7).

(1) The objective of the procedures in this part is to produce emission measurements equivalent to those that would result from measuring emissions during in-use operation using the same engine configuration as installed in a vehicle, equipment, or vessel. However, in unusual circumstances where these procedures may result in measurements that do not represent in-use operation, you must notify us if good engineering judgment indicates that the specified procedures cause unrepresentative emission measurements for your engines. Note that you need not notify us of unrepresentative aspects of the test procedure if measured emissions are equivalent to in-use emissions. This provision does not obligate you to pursue new information regarding the different ways your engine might operate in use, nor does it obligate you to collect any other in-use information to verify whether or not these test procedures are representative of your engine's in-use operation. If you notify us of unrepresentative procedures under this paragraph (c)(1), we will cooperate with you to establish whether and how the procedures should be appropriately changed to result in more representative measurements. While the provisions of this paragraph (c)(1) allow us to be responsive to issues as they arise, we would generally work toward making these testing changes generally applicable through rulemaking. We will allow reasonable lead time for compliance with any resulting change in procedures. We will consider the following factors in determining the importance of pursuing changes to the procedures:

(i) Whether supplemental emission standards or other requirements in the standard-setting part address the type of operation of concern or otherwise prevent inappropriate design strategies.

(ii) Whether the unrepresentative aspect of the procedures affect your ability to show compliance with the applicable emission standards.

(iii) The extent to which the established procedures require the use of emission-control technologies or strategies that are expected to ensure a comparable degree of emission control under the in-use operation that differs from the specified procedures.

(2) You may request to use special procedures if your engine cannot be tested using the specified procedures. For example, this may apply if your engine cannot operate on the specified duty cycle. In this case, tell us in writing why you cannot satisfactorily test your engine using this part's procedures and ask to use a different approach. We will approve your request if we determine that it would produce emission measurements that represent in-use operation and we determine that it can be used to show compliance with the requirements of the standard-setting part. Where we approve special procedures that differ substantially from the specified procedures, we may preclude you from participating in averaging, banking, and trading with the affected engine families.

(3) In a given model year, you may use procedures required for later model year engines without request. If you upgrade your testing facility in stages, you may rely on a combination of procedures for current and later model year engines as long as you can ensure, using good engineering judgment, that the combination you use for testing does not affect your ability to show compliance with the applicable emission standards.

(4) In a given model year, you may ask to use procedures allowed for earlier model year engines. We will approve this only if you show us that using the procedures allowed for earlier model years does not affect your ability to show compliance with the applicable emission standards.

(5) You may ask to use emission data collected using other procedures, such as those of the California Air Resources Board or the International Organization for Standardization. We will approve this only if you show us that using these other procedures does not affect your ability to show compliance with the applicable emission standards.

(6) During the 12 months following the effective date of any change in the provisions of this part 1065, you may use data collected using procedures specified in the previously applicable version of this part 1065. This paragraph (c)(6) does not restrict the use of carryover certification data otherwise allowed by the standard-setting part.

(7) You may request to use alternate procedures that are equivalent to the allowed procedures, or procedures that are more accurate or more precise than the allowed procedures. The following provisions apply to requests for alternate procedures:

(i) *Applications*. Follow the instructions in § 1065.12.

(ii) *Submission*. Submit requests in writing to the Designated Compliance Officer.

(iii) *Notification*. We may approve your request by telling you directly, or we may issue guidance announcing our approval of a specific alternate procedure, which would make additional requests for approval unnecessary.

(d) If we require you to request approval to use other procedures under paragraph (c) of this section, you may not use them until we approve your request.

[70 FR 40516, July 13, 2005, as amended at 73 FR 37290, June 30, 2008; 75 FR 23028, Apr. 30, 2010]

§ 1065.12 Approval of alternate procedures.

(a) To get approval for an alternate procedure under § 1065.10(c), send the Designated Compliance Officer an initial written request describing the alternate procedure and why you believe it is equivalent to the specified procedure. Anyone may request alternate procedure approval. This means that an individual engine manufacturer may request to use an alternate procedure. This also means that an instrument manufacturer may request to have an instrument, equipment, or procedure approved as an alternate procedure to those specified in this part. We may approve your request based on this information alone, or, as described in this section, we may ask you to submit to us in writing supplemental information showing that your alternate procedure is consistently and reliably at least as accurate and repeatable as the specified procedure.

(b) We may make our approval under this section conditional upon meeting other requirements or specifications. We may limit our approval, for example, to certain time frames, specific duty cycles, or specific emission standards. Based upon any supplemental information we receive after our initial approval, we may amend a previously approved alternate procedure to extend, limit, or discontinue its use. We intend to publicly announce alternate procedures that we approve.

(c) Although we will make every effort to approve only alternate procedures that completely meet our requirements, we may revoke our approval of an alternate procedure if new information shows that it is significantly not equivalent to the specified procedure.

If we do this, we will grant time to switch to testing using an allowed procedure, considering the following factors:

(1) The cost, difficulty, and availability to switch to a procedure that we allow.

(2) The degree to which the alternate procedure affects your ability to show that your engines comply with all applicable emission standards.

(3) Any relevant factors considered in our initial approval.

(d) If we do not approve your proposed alternate procedure based on the information in your initial request, we may ask you to send the following information to fully evaluate your request:

(1) *Theoretical basis*. Give a brief technical description explaining why you believe the proposed alternate procedure should result in emission measurements equivalent to those using the specified procedure. You may include equations, figures, and references. You should consider the full range of parameters that may affect equivalence. For example, for a request to use a different NO_X measurement procedure, you should theoretically relate the alternate detection principle to the specified detection principle over the expected concentration ranges for NO,

NO_2, and interference gases. For a request to use a different PM measurement procedure, you should explain the principles by which the alternate procedure quantifies particulate mass similarly to the specified procedures.

(2) *Technical description*. Describe briefly any hardware or software needed to perform the alternate procedure. You may include dimensioned drawings, flowcharts, schematics, and component specifications. Explain any necessary calculations or other data manipulation.

(3) *Procedure execution*. Describe briefly how to perform the alternate procedure and recommend a level of training an operator should have to achieve acceptable results.

Summarize the installation, calibration, operation, and maintenance procedures in a step-by-step format. Describe how any calibration is performed using NIST-traceable standards or other similar standards we approve. Calibration must be specified by using known quantities and must not be specified as a comparison with other allowed procedures.

(4) *Data-collection techniques*. Compare measured emission results using the proposed alternate procedure and the specified procedure, as follows:

(i) Both procedures must be calibrated independently to NIST-traceable standards or to other similar standards we approve.

(ii) Include measured emission results from all applicable duty cycles. Measured emission results should show that the test engine meets all applicable emission standards according to specified procedures.

(iii) Use statistical methods to evaluate the emission measurements, such as those described in paragraph (e) of this section.

(e) We may give you specific directions regarding methods for statistical analysis, or we may approve other methods that you propose. Absent any other directions from us, use a *t*-test and an *F*-test calculated according to § 1065.602 to evaluate whether your proposed alternate procedure is equivalent to the specified procedure. We recommend that you consult a statistician if you are unfamiliar with these statistical tests. Perform the tests as follows:

(1) Repeat measurements for all applicable duty cycles at least seven times for each procedure. You may use laboratory duty cycles to evaluate field-testing procedures.

Be sure to include all available results to evaluate the precision and accuracy of the proposed alternate procedure, as described in § 1065.2.

(2) Demonstrate the accuracy of the proposed alternate procedure by showing that it passes a two-sided *t*-test. Use an unpaired *t*-test, unless you show that a paired t-test is appropriate under both of the following provisions:

(i) For paired data, the population of the paired differences from which you sampled paired differences must be independent. That is, the probability of any given value of one paired difference is unchanged by knowledge of the value of another paired difference. For example, your paired data would violate this requirement if your series of paired differences showed a distinct increase or decrease that was dependent on the time at which they were sampled.

(ii) For paired data, the population of paired differences from which you sampled the paired differences must have a normal (i.e., Gaussian) distribution. If the population of paired difference is not normally distributed, consult a statistician for a more appropriate statistical test, which may include transforming the data with a mathematical function or using some kind of nonparametric test.

(3) Show that t is less than the critical t value, t_{crit}, tabulated in § 1065.602, for the following confidence intervals:

(i) 90% for a proposed alternate procedure for laboratory testing.

(ii) 95% for a proposed alternate procedure for field testing.

(4) Demonstrate the precision of the proposed alternate procedure by showing that it passes an *F*-test. Use a set of at least seven samples from the reference procedure and a set of at least seven samples from the alternate procedure to perform an *F*-test. The sets must meet the following requirements:

(i) Within each set, the values must be independent. That is, the probability of any given value in a set must

be unchanged by knowledge of another value in that set. For example, your data would violate this requirement if a set showed a distinct increase or decrease that was dependent upon the time at which they were sampled.

(ii) For each set, the population of values from which you sampled must have a normal (i.e., Gaussian) distribution. If the population of values is not normally distributed, consult a statistician for a more appropriate statistical test, which may include transforming the data with a mathematical function or using some kind of nonparametric test.

(iii) The two sets must be independent of each other. That is, the probability of any given value in one set must be unchanged by knowledge of another value in the other set. For example, your data would violate this requirement if one value in a set showed a distinct increase or decrease that was dependent upon a value in the other set. Note that a trend of emission changes from an engine would not violate this requirement.

(iv) If you collect paired data for the paired *t*-test in paragraph (e)(2) in this section, use caution when selecting sets from paired data for the *F*-test. If you do this, select sets that do not mask the precision of the measurement procedure. We recommend selecting such sets only from data collected using the same engine, measurement instruments, and test cycle.

(5) Show that F is less than the critical F value, F_{crit}, tabulated in §1065.602. If you have several F-test results from several sets of data, show that the mean F-test value is less than the mean critical F value for all the sets. Evaluate F_{crit}, based on the following confidence intervals:

(i) 90% for a proposed alternate procedure for laboratory testing.

(ii) 95% for a proposed alternate procedure for field testing.

[70 FR 40516, July 13, 2005, as amended at 73 FR 37290, June 30, 2008]

§1065.15 Overview of procedures for laboratory and field testing.

This section outlines the procedures to test engines that are subject to emission standards.

(a) In the standard-setting part, we set brake-specific emission standards in g/(kW·hr) (or g/(hp·hr)), for the following constituents:

(1) Total oxides of nitrogen, NO_X.

(2) Hydrocarbons (HC), which may be expressed in the following ways:

(i) Total hydrocarbons, THC.

(ii) Nonmethane hydrocarbons, NMHC, which results from subtracting methane (CH_4) from THC.

(iii) Total hydrocarbon-equivalent, THCE, which results from adjusting THC mathematically to be equivalent on a carbon-mass basis.

(iv) Nonmethane hydrocarbon-equivalent, NMHCE, which results from adjusting NMHC mathematically to be equivalent on a carbon-mass basis.

(3) Particulate mass, PM.

(4) Carbon monoxide, CO.

(b) Note that some engines are not subject to standards for all the emission constituents identified in paragraph (a) of this section.

(c) We generally set brake-specific emission standards over test intervals and/or duty cycles, as follows:

(1) *Engine operation.* Testing may involve measuring emissions and work in a laboratory-type environment or in the field, as described in paragraph (f) of this section. For most laboratory testing, the engine is operated over one or more duty cycles specified in the standard-setting part. However, laboratory testing may also include non-duty cycle testing (such as simulation of field testing in a laboratory). For field testing, the engine is operated under normal in-use operation. The standard-setting part specifies how test intervals are defined for field testing. Refer to the definitions of ''duty cycle'' and ''test interval'' in §1065.1001. Note that a single duty cycle may have multiple test intervals and require weighting of results from multiple test intervals to calculate a composite brake-specific emissions value to compare to the standard.

(2) *Constituent determination.* Determine the total mass of each constituent over a test interval by selecting from the following methods:

(i) *Continuous sampling.* In continuous sampling, measure the constituent's concentration continuously from raw

or dilute exhaust. Multiply this concentration by the continuous (raw or dilute) flow rate at the emission sampling location to determine the constituent's flow rate. Sum the constituent's flow rate continuously over the test interval. This sum is the total mass of the emitted constituent.

(ii) *Batch sampling*. In batch sampling, continuously extract and store a sample of raw or dilute exhaust for later measurement. Extract a sample proportional to the raw or dilute exhaust flow rate. You may extract and store a proportional sample of exhaust in an appropriate container, such as a bag, and then measure HC, CO, and NO_X concentrations in the container after the test interval. You may deposit PM from proportionally extracted exhaust onto an appropriate substrate, such as a filter. In this case, divide the PM by the amount of filtered exhaust to calculate the PM concentration. Multiply batch sampled concentrations by the total (raw or dilute) flow from which it was extracted during the test interval. This product is the total mass of the emitted constituent.

(iii) *Combined sampling*. You may use continuous and batch sampling simultaneously during a test interval, as follows:

(A) You may use continuous sampling for some constituents and batch sampling for others.

(B) You may use continuous and batch sampling for a single constituent, with one being a redundant measurement. *See* § 1065.201 for more information on redundant measurements.

(3) *Work determination*. Determine work over a test interval by one of the following methods:

(i) *Speed and torque*. Synchronously multiply speed and brake torque to calculate instantaneous values for engine brake power. Sum engine brake power over a test interval to determine total work.

(ii) *Fuel consumed and brake-specific fuel consumption*. Directly measure fuel consumed or calculate it with chemical balances of the fuel, intake air, and exhaust. To calculate fuel consumed by a chemical balance, you must also measure either intake-air flow rate or exhaust flow rate. Divide the fuel consumed during a test interval by the brake-specific fuel consumption to determine work over the test interval. For laboratory testing, calculate the brake-specific fuel consumption using fuel consumed and speed and torque over a test interval. For field testing, refer to the standard-setting part and § 1065.915 for selecting an appropriate value for brake-specific fuel consumption.

(d) Refer to § 1065.650 for calculations to determine brake-specific emissions.

(e) The following figure illustrates the allowed measurement configurations described in this part 1065:

Figure 1 of §1065.15—Default test procedures and other specified procedures.

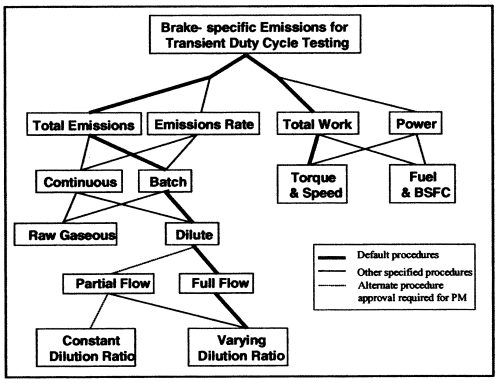

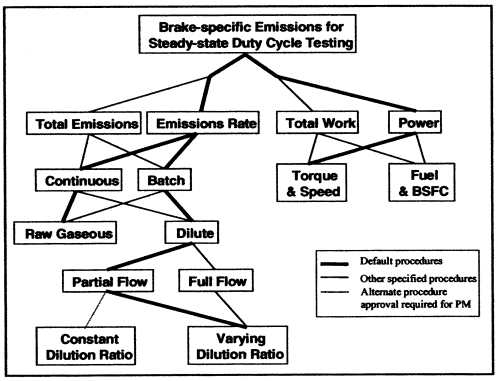

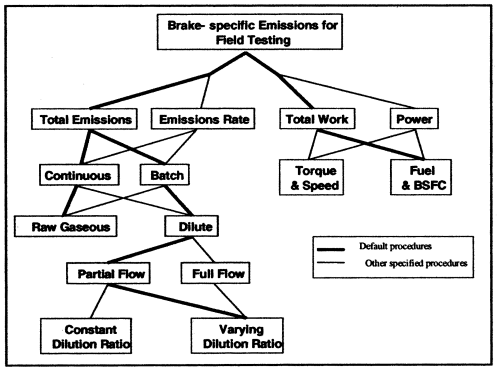

(f) This part 1065 describes how to test engines in a laboratory-type environment or in the field.

(1) This affects test intervals and duty cycles as follows:

(i) For laboratory testing, you generally determine brake-specific emissions for duty-cycle testing by using an engine dynamometer in a laboratory or other environment. This typically consists of one or more test intervals, each defined by a duty cycle, which is a sequence of modes, speeds, and/or torques (or powers) that an engine must follow. If the standard-setting part allows it, you may also simulate field testing with an engine dynamometer in a laboratory or other environment.

(ii) Field testing consists of normal in-use engine operation while an engine is installed in a vehicle, equipment, or vessel rather than following a specific engine duty cycle. The standard-setting part specifies how test intervals are defined for field testing.

(2) The type of testing may also affect what test equipment may be used. You may use ''lab-grade'' test equipment for any testing. The term ''lab-grade'' refers to equipment that fully conforms to the applicable specifications of this part. For some testing you may alternatively use ''field-grade'' equipment. The term ''field-grade'' refers to equipment that fully conforms to the applicable specifications of subpart J of this part, but does not fully conform to other specifications of this part. You may use ''field-grade'' equipment for field testing. We also specify in this part and in the standard-setting parts certain cases in which you may use ''field-grade'' equipment for testing in a laboratory-type environment. (NOTE: Although ''field-grade'' equipment is generally more portable than ''lab-grade'' test equipment, portability is not relevant to whether equipment is considered to be ''field-grade'' or ''lab-grade''.)

[70 FR 40516, July 13, 2005, as amended at 73 FR 37290, June 30, 2008; 75 FR 23028, Apr. 30, 2010]

§ 1065.20 Units of measure and overview of calculations.

(a) *System of units*. The procedures in this part generally follow the International System of Units (SI), as detailed in NIST Special Publication 811, 1995 Edition, ''Guide for the Use of the International System of Units (SI),'' which we incorporate by reference in § 1065.1010. This document is available on the Internet at *http://physics.nist.gov/Pubs/SP811/contents.html*. Note the following exceptions:

(1) We designate rotational frequency, f_n, of an engine's crankshaft in revolutions per minute (rev/min), rather than the SI unit of reciprocal seconds (1/s). This is based on the commonplace use of rev/min in many engine dynamometer laboratories. Also, we use the symbol f_n to identify rotational frequency in rev/min, rather than the SI convention of using n. This avoids confusion with our usage of the symbol n for a molar quantity.

(2) We designate brake-specific emissions in grams per kilowatt-hour (g/(kW·hr)), rather than the SI unit of grams per megajoule (g/MJ). In addition, we use the symbol hr to identify hour, rather than the SI convention of using h. This is based on the fact that engines are generally subject to emission standards expressed in g/kW·hr. If we specify engine standards in grams per horsepower·hour (g/(hp·hr)) in the standard-setting part, convert units as specified in paragraph (d) of this section.

(3) We designate temperatures in units of degrees Celsius (°C) unless a calculation requires an absolute temperature. In that case, we designate temperatures in units of Kelvin (K). For conversion purposes throughout this part, 0 °C equals 273.15 K.

(b) *Concentrations*. This part does not rely on amounts expressed in parts per million or similar units. Rather, we express such amounts in the following SI units:

(1) For ideal gases, μmol/mol, formerly ppm (volume).

(2) For all substances, cm^3/m^3, formerly ppm (volume).

(3) For all substances, mg/kg, formerly ppm (mass).

(c) *Absolute pressure*. Measure absolute pressure directly or calculate it as the sum of atmospheric pressure plus a differential pressure that is referenced to atmospheric pressure.

(d) *Units conversion*. Use the following conventions to convert units:

(1) *Testing*. You may record values and perform calculations with other units. For testing with equipment that

involves other units, use the conversion factors from NIST Special Publication 811, as described in paragraph (a) of this section.

(2) *Humidity*. In this part, we identify humidity levels by specifying dewpoint, which is the temperature at which pure water begins to condense out of air. Use humidity conversions as described in § 1065.645.

(3) *Emission standards*. If your standard is in g/(hp·hr) units, convert kW to hp before any rounding by using the conversion factor of 1 hp (550 ft·lbf/s) = 0.7456999 kW. Round the final value for comparison to the applicable standard.

(e) *Rounding*. Unless the standard-setting part specifies otherwise, round only final values, not intermediate values. Round values to the number of significant digits necessary to match the number of decimal places of the applicable standard or specification. For information not related to standards or specifications, use good engineering judgment to record the appropriate number of significant digits.

(f) Interpretation of ranges. Interpret a range as a tolerance unless we explicitly identify it as an accuracy, repeatability, linearity, or noise specification. See § 1065.1001 for the definition of tolerance. In this part, we specify two types of ranges:

(1) Whenever we specify a range by a single value and corresponding limit values above and below that value, target any associated control point to that single value. Examples of this type of range include ''± 10% of maximum pressure'', or ''(30 ± 10) kPa''.

(2) Whenever we specify a range by the interval between two values, you may target any associated control point to any value within that range. An example of this type of range is ''(40 to 50) kPa''.

(g) Scaling of specifications with respect to an applicable standard. Because this part 1065 is applicable to a wide range of engines and emission standards, some of the specifications in this part are scaled with respect to an engine's applicable standard or maximum power. This ensures that the specification will be adequate to determine compliance, but not overly burdensome by requiring unnecessarily high-precision equipment. Many of these specifications are given with respect to a ''flow-weighted mean'' that is expected at the standard or during testing. Flow-weighted mean is the mean of a quantity after it is weighted proportional to a corresponding flow rate. For example, if a gas concentration is measured continuously from the raw exhaust of an engine, its flow-weighted mean concentration is the sum of the products of each recorded concentration times its respective exhaust flow rate, divided by the sum of the recorded flow rates. As another example, the bag concentration from a CVS system is the same as the flow-weighted mean concentration, because the CVS system itself flow-weights the bag concentration. Refer to § 1065.602 for information needed to estimate and calculate flow-weighted means. Wherever a specification is scaled to a value based upon an applicable standard, interpret the standard to be the family emission limit if the engine is certified under an emission credit program in the standard-setting part.

[70 FR 40516, July 13, 2005, as amended at 73 FR 37292, June 30, 2008]

§ 1065.25 Recordkeeping.

The procedures in this part include various requirements to record data or other information. Refer to the standard-setting part regarding recordkeeping requirements. If the standard-setting part does not specify recordkeeping requirements, store these records in any format and on any media and keep them readily available for one year after you send an associated application for certification, or one year after you generate the data if they do not support an application for certification. You must promptly send us organized, written records in English if we ask for them. We may review them at any time.

Subpart B—Equipment Specifications

§ 1065.101 Overview.

(a) This subpart specifies equipment, other than measurement instruments,

related to emission testing. The provisions of this subpart apply for all engine dynamometer testing where engine speeds and loads are controlled to follow a prescribed duty cycle. See subpart J of this part to determine which of the provisions of this subpart apply for field testing. This equipment includes three broad categories-dynamometers, engine fluid systems (such as fuel and intake-air systems), and emission-sampling hardware.

(b) Other related subparts in this part identify measurement instruments (subpart C), describe how to evaluate the performance of these instruments (subpart D), and specify engine fluids and analytical gases (subpart H).

(c) Subpart J of this part describes additional equipment that is specific to field testing.

(d) Figures 1 and 2 of this section illustrate some of the possible configurations of laboratory equipment. These figures are schematics only; we do not require exact conformance to them. Figure 1 of this section illustrates the equipment specified in this subpart and gives some references to sections in this subpart. Figure 2 of this section illustrates some of the possible configurations of a full-flow dilution, constant-volume sampling (CVS) system. Not all possible CVS configurations are shown.

(e) Dynamometer testing involves engine operation over speeds and loads that are controlled to a prescribed duty cycle. Field testing involves measuring emissions over normal in-use operation of a vehicle or piece of equipment. Field testing does not involve operating an engine over a prescribed duty cycle.

Figure 1 of §1065.101—Engine dynamometer laboratory equipment.

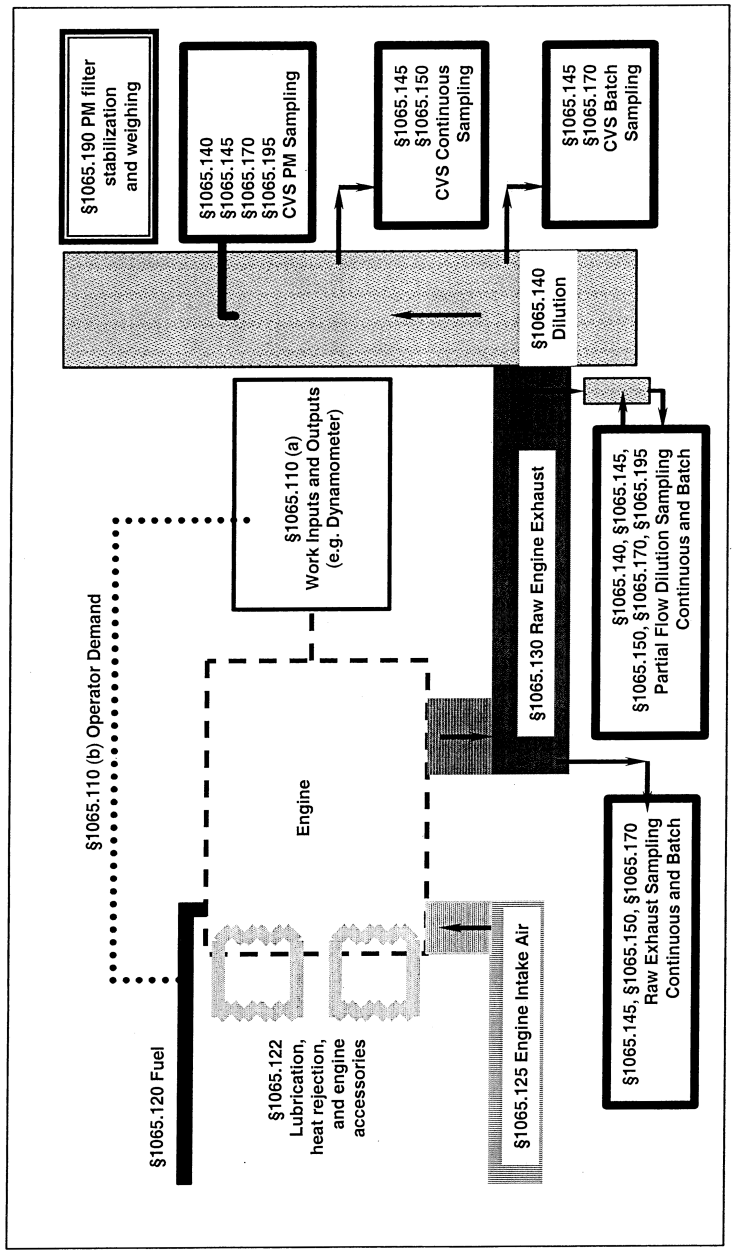

Figure 2 of §1065.101—Examples of some full-flow dilution sampling configurations.

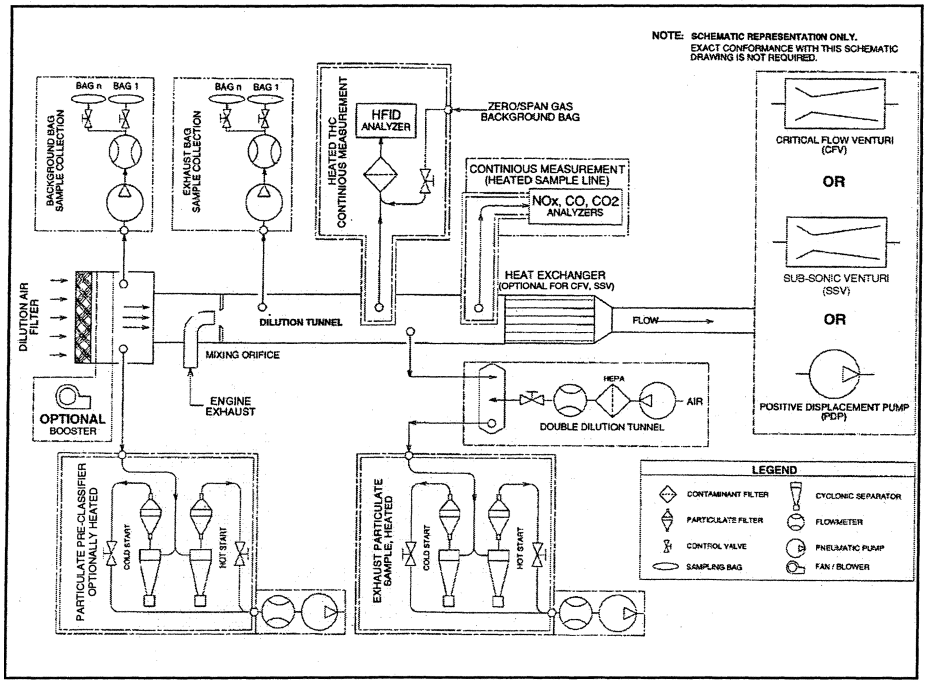

[70 FR 40516, July 13, 2005, as amended at 73 FR 37292, June 30, 2008]

§ 1065.110 Work inputs and outputs, accessory work, and operator demand.

(a) *Work*. Use good engineering judgment to simulate all engine work inputs and outputs as they typically would operate in use. Account for work inputs and outputs during an emission test by measuring them; or, if they are small, you may show by engineering analysis that disregarding them does not affect your ability to determine the net work output by more than ± 0.5% of the net expected work output over the test interval. Use equipment to simulate the specific types of work, as follows:

(1) *Shaft work*. Use an engine dynamometer that is able to meet the cycle-validation criteria in §1065.514 over each applicable duty cycle.

(i) You may use eddy-current and water-brake dynamometers for any testing that does not involve engine motoring, which is identified by negative torque commands in a reference duty cycle. See the standard setting part for reference duty cycles that are applicable to your engine.

(ii) You may use alternating-current or direct-current motoring dynamometers for any type of testing.

(iii) You may use one or more dynamometers.

(iv) You may use any device that is already installed on a vehicle, equipment, or vessel to absorb work from the engine's output shaft(s). Examples of these types of devices include a vessel's propeller and a locomotive's generator.

(2) *Electrical work*. Use one or more of the following to simulate electrical work:

(i) Use storage batteries or capacitors that are of the type and capacity installed in use.

(ii) Use motors, generators, and alternators that are of the type and capacity installed in use.

(iii) Use a resistor load bank to simulate electrical loads.

(3) *Pump, compressor, and turbine work.* Use pumps, compressors, and turbines that are of the type and capacity installed in use. Use working fluids that are of the same type and thermodynamic state as normal in-use operation.

(b) *Laboratory work inputs.* You may supply any laboratory inputs of work to the engine. For example, you may supply electrical work to the engine to operate a fuel system, and as another example you may supply compressor work to the engine to actuate pneumatic valves. We may ask you to show by engineering analysis your accounting of laboratory work inputs to meet the criterion in paragraph (a) of this section.

(c) *Engine accessories.* You must either install or account for the work of engine accessories required to fuel, lubricate, or heat the engine, circulate coolant to the engine, or to operate aftertreatment devices. Operate the engine with these accessories installed or accounted for during all testing operations, including mapping. If these accessories are not powered by the engine during a test, account for the work required to perform these functions from the total work used in brake-specific emission calculations. For air-cooled engines only, subtract externally powered fan work from total work. We may ask you to show by engineering analysis your accounting of engine accessories to meet the criterion in paragraph (a) of this section.

(d) *Engine starter.* You may install a production-type starter.

(e) *Operator demand for shaft work.* Operator demand is defined in §1065.1001. Command the operator demand and the dynamometer(s) to follow a prescribed duty cycle with set points for engine speed and torque as specified in §1065.512. Refer to the standard-setting part to determine the specifications for your duty cycle(s). Use a mechanical or electronic input to control operator demand such that the engine is able to meet the validation criteria in §1065.514 over each applicable duty cycle. Record feedback values for engine speed and torque as specified in §1065.512. Using good engineering judgment, you may improve control of operator demand by altering on-engine speed and torque controls. However, if these changes result in unrepresentative testing, you must notify us and recommend other test procedures under §1065.10(c)(1).

(f) *Other engine inputs.* If your electronic control module requires specific input signals that are not available during dynamometer testing, such as vehicle speed or transmission signals, you may simulate the signals using good engineering judgment. Keep records that describe what signals you simulate and explain why these signals are necessary for representative testing.

[70 FR 40516, July 13, 2005, as amended at 73 FR 37292, June 30, 2008]

§1065.120 Fuel properties and fuel temperature and pressure.

(a) Use fuels as specified in the standard-setting part, or as specified in subpart H of this part if fuels are not specified in the standard-setting part.

(b) If the engine manufacturer specifies fuel temperature and pressure tolerances and the location where they are to be measured, then measure the fuel temperature and pressure at the specified location to show that you are within these tolerances throughout testing.

(c) If the engine manufacturer does not specify fuel temperature and pressure tolerances, use good engineering judgment to set and control fuel temperature and pressure in a way that represents typical in-use fuel temperatures and pressures.

[70 FR 40516, July 13, 2005, as amended at 73 FR 37293, June 30, 2008]

§1065.122 Engine cooling and lubrication.

(a) *Engine cooling.* Cool the engine during testing so its intake-air, oil, coolant, block, and head temperatures are within their expected ranges for normal operation. You may use auxiliary coolers and fans.

(1) For air-cooled engines only, if you use auxiliary fans you must account for work input to the fan(s) according to § 1065.110.

(2) See § 1065.125 for more information related to intake-air cooling.

(3) See § 1065.127 for more information related to exhaust gas recirculation cooling.

(4) Measure temperatures at the manufacturer-specified locations. If the manufacturer does not specify temperature measurement locations, then use good engineering judgment to monitor intake-air, oil, coolant, block, and head temperatures to ensure that they are in their expected ranges for normal operation.

(b) *Forced cooldown*. You may install a forced cooldown system for an engine and an exhaust aftertreatment device according to § 1065.530(a)(1).

(c) *Lubricating oil*. Use lubricating oils specified in § 1065.740. For two-stroke engines that involve a specified mixture of fuel and lubricating oil, mix the lubricating oil with the fuel according to the manufacturer's specifications.

(d) *Coolant*. For liquid-cooled engines, use coolant as specified in § 1065.745.

[70 FR 40516, July 13, 2005, as amended at 73 FR 37293, June 30, 2008]

§ 1065.125 Engine intake air.

(a) Use the intake-air system installed on the engine or one that represents a typical in-use configuration. This includes the charge-air cooling and exhaust gas recirculation systems.

(b) Measure temperature, humidity, and atmospheric pressure near the entrance of the furthest upstream engine or in-use intake system component. This would generally be near the engine's air filter, or near the inlet to the in-use air intake system for engines that have no air filter. For engines with multiple intakes, make measurements near the entrance of each intake.

(1) *Pressure*. You may use a single shared atmospheric pressure meter as long as your laboratory equipment for handling intake air maintains ambient pressure at all intakes within ±1 kPa of the shared atmospheric pressure. For engines with multiple intakes with separate atmospheric pressure measurements at each intake, use an average value for verifying compliance to § 1065.520(b)(2).

(2) *Humidity*. You may use a single shared humidity measurement for intake air as long as your equipment for handling intake air maintains dewpoint at all intakes to within ±0.5 °C of the shared humidity measurement. For engines with multiple intakes with separate humidity measurements at each intake, use a flow-weighted average humidity for NO_X corrections. If individual flows of each intake are not measured, use good engineering judgment to estimate a flow-weighted average humidity.

(3) *Temperature*. Good engineering judgment may require that you shield the temperature sensors or move them upstream of an elbow in the laboratory intake system to prevent measurement errors due to radiant heating from hot engine surfaces or in-use intake system components. You must limit the distance between the temperature sensor and the entrance to the furthest upstream engine or in-use intake system component to no more than 12 times the outer hydraulic diameter of the entrance to the furthest upstream engine or in-use intake system component. However, you may exceed this limit if you use good engineering judgment to show that the temperature at the furthest upstream engine or in-use intake system component meets the specification in paragraph (c) of this section. For engines with multiple intakes, use a flow-weighted average value to verify compliance with the specification in paragraph (c) of this section. If individual flows of each intake are not measured, you may use good engineering judgment to estimate a flow-weighted average temperature. You may also verify that each individual intake complies with the specification in paragraph (c) of this section.

(c) Maintain the temperature of intake air to (25 ± 5) °C, except as follows:

(1) Follow the standard-setting part if it specifies different temperatures.

(2) For engines above 560 kW, you may use 35 °C as the upper bound of the tolerance. However, your system must be capable of controlling the temperature to the 25 °C setpoint for any

steady-state operation at > 30% of maximum engine power.

(3) You may ask us to allow you to apply a different setpoint for intake air temperature if it is necessary to remain consistent with the provisions of § 1065.10(c)(1) for testing during which ambient temperature will be outside this range.

(d) Use an intake-air restriction that represents production engines. Make sure the intake-air restriction is between the manufacturer's specified maximum for a clean filter and the manufacturer's specified maximum allowed. Measure the static differential pressure of the restriction at the location and at the speed and torque set points specified by the manufacturer. If the manufacturer does not specify a location, measure this pressure upstream of any turbocharger or exhaust gas recirculation system connection to the intake air system. If the manufacturer does not specify speed and torque points, measure this pressure while the engine outputs maximum power. As the manufacturer, you are liable for emission compliance for all values up to the maximum restriction you specify for a particular engine.

(e) This paragraph (e) includes provisions for simulating charge-air cooling in the laboratory. This approach is described in paragraph (e)(1) of this section. Limits on using this approach are described in paragraphs (e)(2) and (3) of this section.

(1) Use a charge-air cooling system with a total intake-air capacity that represents production engines' in-use installation. Design any laboratory charge-air cooling system to minimize accumulation of condensate. Drain any accumulated condensate and completely close all drains before starting a duty cycle. Keep the drains closed during the emission test. Maintain coolant conditions as follows:

(i) Maintain a coolant temperature of at least 20 °C at the inlet to the charge-air cooler throughout testing. We recommend maintaining a coolant temperature of 25 ±5 °C at the inlet of the charge-air cooler.

(ii) At the engine conditions specified by the manufacturer, set the coolant flow rate to achieve an air temperature within ±5 °C of the value specified by the manufacturer after the charge-air cooler's outlet. Measure the air-outlet temperature at the location specified by the manufacturer. Use this coolant flow rate set point throughout testing. If the engine manufacturer does not specify engine conditions or the corresponding charge-air cooler air outlet temperature, set the coolant flow rate at maximum engine power to achieve a charge-air cooler air outlet temperature that represents in-use operation.

(iii) If the engine manufacturer specifies pressure-drop limits across the charge-air cooling system, ensure that the pressure drop across the charge-air cooling system at engine conditions specified by the manufacturer is within the manufacturer's specified limit(s). Measure the pressure drop at the manufacturer's specified locations.

(2) Using a constant flow rate as described in paragraph (e)(1) of this section may result in unrepresentative overcooling of the intake air. The provisions of this paragraph (e)(2) apply instead of the provisions of § 1065.10(c)(1) for this simulation. Our allowance to cool intake air as specified in this paragraph (e) does not affect your liability for field testing or for laboratory testing that is done in a way that better represents in-use operation. Where we determine that this allowance adversely affects your ability to demonstrate that your engines would comply with emission standards under in-use conditions, we may require you to use more sophisticated setpoints and controls of charge-air pressure drop, coolant temperature, and flow rate to achieve more representative results.

(3) This approach does not apply for field testing. You may not correct measured emission levels from field testing to account for any differences caused by the simulated cooling in the laboratory.

[70 FR 40516, July 13, 2005, as amended at 73 FR 37293, June 30, 2008; 73 FR 59321, Oct. 8, 2008; 75 FR 23029, Apr. 30, 2010]

§ 1065.127 Exhaust gas recirculation.

Use the exhaust gas recirculation (EGR) system installed with the engine or one that represents a typical in-use configuration. This includes any applicable EGR cooling devices.

§ 1065.130 Engine exhaust.

(a) *General.* Use the exhaust system installed with the engine or one that represents a typical in-use configuration. This includes any applicable aftertreatment devices.

(b) *Aftertreatment configuration.* If you do not use the exhaust system installed with the engine, configure any aftertreatment devices as follows:

(1) Position any aftertreatment device so its distance from the nearest exhaust manifold flange or turbocharger outlet is within the range specified by the engine manufacturer in the application for certification. If this distance is not specified, position aftertreatment devices to represent typical in-use vehicle configurations.

(2) You may use exhaust tubing that is not from the in-use exhaust system upstream of any aftertreatment device that is of diameter(s) typical of in-use configurations. If you use exhaust tubing that is not from the in-use exhaust system upstream of any aftertreatment device, position each aftertreatment device according to paragraph (b)(1) of this section.

(c) *Sampling system connections.* Connect an engine's exhaust system to any raw sampling location or dilution stage, as follows:

(1) Minimize laboratory exhaust tubing lengths and use a total length of laboratory tubing of no more than 10 m or 50 outside diameters, whichever is greater. The start of laboratory exhaust tubing should be specified as the exit of the exhaust manifold, turbocharger outlet, last aftertreatment device, or the in-use exhaust system, whichever is furthest downstream. The end of laboratory exhaust tubing should be specified as the sample point, or first point of dilution. If laboratory exhaust tubing consists of several different outside tubing diameters, count the number of diameters of length of each individual diameter, then sum all the diameters to determine the total length of exhaust tubing in diameters. Use the mean outside diameter of any converging or diverging sections of tubing. Use outside hydraulic diameters of any noncircular sections. For multiple stack configurations where all the exhaust stacks are combined, the start of the laboratory exhaust tubing may be taken at the last joint of where all the stacks are combined.

(2) You may install short sections of flexible laboratory exhaust tubing at any location in the engine or laboratory exhaust systems. You may use up to a combined total of 2 m or 10 outside diameters of flexible exhaust tubing.

(3) Insulate any laboratory exhaust tubing downstream of the first 25 outside diameters of length.

(4) Use laboratory exhaust tubing materials that are smooth-walled, electrically conductive, and not reactive with exhaust constituents. Stainless steel is an acceptable material.

(5) We recommend that you use laboratory exhaust tubing that has either a wall thickness of less than 2 mm or is air gap-insulated to minimize temperature differences between the wall and the exhaust.

(6) We recommend that you connect multiple exhaust stacks from a single engine into one stack upstream of any emission sampling. To ensure mixing of the multiple exhaust streams before emission sampling, you may configure the exhaust system with turbulence generators, such as orifice plates or fins, to achieve good mixing. We recommend a minimum Reynolds number, *Re#*, of 4000 for the combined exhaust stream, where *Re#* is based on the inside diameter of the single stack. *Re#* is defined in § 1065.640.

(d) *In-line instruments.* You may insert instruments into the laboratory exhaust tubing, such as an in-line smoke meter. If you do this, you may leave a length of up to 5 outside diameters of laboratory exhaust tubing uninsulated on each side of each instrument, but you must leave a length of no more than 25 outside diameters of laboratory exhaust tubing uninsulated in total, including any lengths adjacent to in-line instruments.

(e) *Leaks.* Minimize leaks sufficiently to ensure your ability to demonstrate compliance with the applicable standards. We recommend performing a chemical balance of fuel, intake air, and exhaust according to § 1065.655 to verify exhaust system integrity.

(f) *Grounding.* Electrically ground the entire exhaust system.

(g) *Forced cooldown*. You may install a forced cooldown system for an exhaust aftertreatment device according to § 1065.530(a)(1)(i).

(h) *Exhaust restriction*. As the manufacturer, you are liable for emission compliance for all values up to the maximum restriction(s) you specify for a particular engine. Measure and set exhaust restriction(s) at the location(s) and at the engine speed and torque values specified by the manufacturer. Also, for variable-restriction aftertreatment devices, measure and set exhaust restriction(s) at the aftertreatment condition (degreening/aging and regeneration/loading level) specified by the manufacturer. If the manufacturer does not specify a location, measure this pressure downstream of any turbocharger. If the manufacturer does not specify speed and torque points, measure pressure while the engine produces maximum power. Use an exhaust-restriction setpoint that represents a typical in-use value, if available. If a typical in-use value for exhaust restriction is not available, set the exhaust restriction at (80 to 100)% of the maximum exhaust restriction specified by the manufacturer, or if the maximum is 5 kPa or less, the set point must be no less than 1.0 kPa from the maximum. For example, if the maximum back pressure is 4.5 kPa, do not use an exhaust restriction set point that is less than 3.5 kPa.

(i) *Open crankcase emissions*. If the standard-setting part requires measuring open crankcase emissions, you may either measure open crankcase emissions separately using a method that we approve in advance, or route open crankcase emissions directly into the exhaust system for emission measurement. If the engine is not already configured to route open crankcase emissions for emission measurement, route open crankcase emissions as follows:

(1) Use laboratory tubing materials that are smooth-walled, electrically conductive, and not reactive with crankcase emissions. Stainless steel is an acceptable material. Minimize tube lengths. We also recommend using heated or thin-walled or air gap-insulated tubing to minimize temperature differences between the wall and the crankcase emission constituents.

(2) Minimize the number of bends in the laboratory crankcase tubing and maximize the radius of any unavoidable bend.

(3) Use laboratory crankcase exhaust tubing that meets the engine manufacturer's specifications for crankcase back pressure.

(4) Connect the crankcase exhaust tubing into the raw exhaust downstream of any aftertreatment system, downstream of any installed exhaust restriction, and sufficiently upstream of any sample probes to ensure complete mixing with the engine's exhaust before sampling. Extend the crankcase exhaust tube into the free stream of exhaust to avoid boundary-layer effects and to promote mixing. You may orient the crankcase exhaust tube's outlet in any direction relative to the raw exhaust flow.

[73 FR 37293, June 30, 2008]

§ 1065.140 Dilution for gaseous and PM constituents.

(a) *General*. You may dilute exhaust with ambient air, synthetic air, or nitrogen. For gaseous emission measurement the diluent must be at least 15 °C. Note that the composition of the diluent affects some gaseous emission measurement instruments' response to emissions. We recommend diluting exhaust at a location as close as possible to the location where ambient air dilution would occur in use.

(b) *Dilution-air conditions and background concentrations*. Before a diluent is mixed with exhaust, you may precondition it by increasing or decreasing its temperature or humidity. You may also remove constituents to reduce their background concentrations. The following provisions apply to removing constituents or accounting for background concentrations:

(1) You may measure constituent concentrations in the diluent and compensate for background effects on test results. See § 1065.650 for calculations that compensate for background concentrations.

(2) Either measure these background concentrations the same way you measure diluted exhaust constituents, or measure them in a way that does

not affect your ability to demonstrate compliance with the applicable standards. For example, you may use the following simplifications for background sampling:

(i) You may disregard any proportional sampling requirements.

(ii) You may use unheated gaseous sampling systems.

(iii) You may use unheated PM sampling systems.

(iv) You may use continuous sampling if you use batch sampling for diluted emissions.

(v) You may use batch sampling if you use continuous sampling for diluted emissions.

(3) For removing background PM, we recommend that you filter all dilution air, including primary full-flow dilution air, with high-efficiency particulate air (HEPA) filters that have an initial minimum collection efficiency specification of 99.97% (see §1065.1001 for procedures related to HEPA-filtration efficiencies). Ensure that HEPA filters are installed properly so that background PM does not leak past the HEPA filters. If you choose to correct for background PM without using HEPA filtration, demonstrate that the background PM in the dilution air contributes less than 50% to the net PM collected on the sample filter. You may correct net PM without restriction if you use HEPA filtration.

(c) *Full-flow dilution; constant-volume sampling (CVS).* You may dilute the full flow of raw exhaust in a dilution tunnel that maintains a nominally constant volume flow rate, molar flow rate or mass flow rate of diluted exhaust, as follows:

(1) *Construction.* Use a tunnel with inside surfaces of 300 series stainless steel. Electrically ground the entire dilution tunnel. We recommend a thin-walled and insulated dilution tunnel to minimize temperature differences between the wall and the exhaust gases.

(2) *Pressure control.* Maintain static pressure at the location where raw exhaust is introduced into the tunnel within ± 1.2 kPa of atmospheric pressure. You may use a booster blower to control this pressure. If you test an engine using more careful pressure control and you show by engineering analysis or by test data that you require this level of control to demonstrate compliance at the applicable standards, we will maintain the same level of static pressure control when we test that engine.

(3) *Mixing.* Introduce raw exhaust into the tunnel by directing it downstream along the centerline of the tunnel. You may introduce a fraction of dilution air radially from the tunnel's inner surface to minimize exhaust interaction with the tunnel walls. You may configure the system with turbulence generators such as orifice plates or fins to achieve good mixing. We recommend a minimum Reynolds number, *Re#*, of 4000 for the diluted exhaust stream, where Re# is based on the inside diameter of the dilution tunnel. *Re#* is defined in §1065.640.

(4) *Flow measurement preconditioning.* You may condition the diluted exhaust before measuring its flow rate, as long as this conditioning takes place downstream of any heated HC or PM sample probes, as follows:

(i) You may use flow straighteners, pulsation dampeners, or both of these.

(ii) You may use a filter.

(iii) You may use a heat exchanger to control the temperature upstream of any flow meter, but you must take steps to prevent aqueous condensation as described in paragraph (c)(6) of this section.

(5) *Flow measurement.* Section 1065.240 describes measurement instruments for diluted exhaust flow.

(6) *Aqueous condensation.* This paragraph (c)(6) describes how you must address aqueous condensation in the CVS. As described below, you may meet these requirements by preventing or limiting aqueous condensation in the CVS from the exhaust inlet to the last emission sample probe. *See* that paragraph for provisions related to the CVS between the last emission sample probe and the CVS flow meter. You may heat and/or insulate the dilution tunnel walls, as well as the bulk stream tubing downstream of the tunnel to prevent or limit aqueous condensation. Where we allow aqueous condensation to occur, use good engineering judgment to ensure that the condensation does not affect your ability to demonstrate that your engines comply

with the applicable standards (*see* § 1065.10(a)).

(i) *Preventing aqueous condensation.* To prevent condensation, you must keep the temperature of internal surfaces, excluding any sample probes, above the dew point of the dilute exhaust passing through the CVS tunnel. Use good engineering judgment to monitor temperatures in the CVS. For the purposes of this paragraph (c)(6), assume that aqueous condensation is pure water condensate only, even though the definition of ''aqueous condensation'' in § 1065.1001 includes condensation of any constituents that contain water. No specific verification check is required under this paragraph (c)(6)(i), but we may ask you to show how you comply with this requirement. You may use engineering analysis, CVS tunnel design, alarm systems, measurements of wall temperatures, and calculation of water dew point to demonstrate compliance with this requirement. For optional CVS heat exchangers, you may use the lowest water temperature at the inlet(s) and outlet(s) to determine the minimum internal surface temperature.

(ii) *Limiting aqueous condensation.* This paragraph (c)(6)(ii) specifies limits of allowable condensation and requires you to verify that the amount of condensation that occurs during each test interval does not exceed the specified limits.

(A) Use chemical balance equations in § 1065.655 to calculate the mole fraction of water in the dilute exhaust continuously during testing. Alternatively, you may continuously measure the mole fraction of water in the dilute exhaust prior to any condensation during testing. Use good engineering judgment to select, calibrate and verify water analyzers/detectors. The linearity verification requirements of § 1065.307 do not apply to water analyzers/detectors used to correct for the water content in exhaust samples.

(B) Use good engineering judgment to select and monitor locations on the CVS tunnel walls prior to the last emission sample probe. If you are also verifying limited condensation from the last emission sample probe to the CVS flow meter, use good engineering judgment to select and monitor locations on the CVS tunnel walls, optional CVS heat exchanger, and CVS flow meter. For optional CVS heat exchangers, you may use the lowest water temperature at the inlet(s) and outlet(s) to determine the minimum internal surface temperature. Identify the minimum surface temperature on a continuous basis.

(C) Identify the maximum potential mole fraction of dilute exhaust lost on a continuous basis during the entire test interval. This value must be less than or equal to 0.02 (*i.e.* 2%). Calculate on a continuous basis the mole fraction of water that would be in equilibrium with liquid water at the measured minimum surface temperature. Subtract this mole fraction from the mole fraction of water that would be in the exhaust without condensation (either measured or from the chemical balance), and set any negative values to zero. This difference is the potential mole fraction of the dilute exhaust that would be lost due to water condensation on a continuous basis.

(D) Integrate the product of the molar flow rate of the dilute exhaust and the potential mole fraction of dilute exhaust lost, and divide by the totalized dilute exhaust molar flow over the test interval. This is the potential mole fraction of the dilute exhaust that would be lost due to water condensation over the entire test interval. Note that this assumes no re-evaporation. This value must be less than or equal to 0.005 (*i.e.* 0.5%).

(7) *Flow compensation.* Maintain nominally constant molar, volumetric or mass flow of diluted exhaust. You may maintain nominally constant flow by either maintaining the temperature and pressure at the flow meter or by directly controlling the flow of diluted exhaust. You may also directly control the flow of proportional samplers to maintain proportional sampling. For an individual test, validate proportional sampling as described in § 1065.545.

(d) *Partial-flow dilution (PFD).* You may dilute a partial flow of raw or previously diluted exhaust before measuring emissions. Section 1065.240 describes PFD-related flow measurement

instruments. PFD may consist of constant or varying dilution ratios as described in paragraphs (d)(2) and (3) of this section. An example of a constant dilution ratio PFD is a ''secondary dilution PM'' measurement system.

(1) *Applicability*. (i) You may use PFD to extract a proportional raw exhaust sample for any batch or continuous PM emission sampling over any transient duty cycle, any steady-state duty cycle, or any ramped-modal cycle.

(ii) You may use PFD to extract a proportional raw exhaust sample for any batch or continuous gaseous emission sampling over any transient duty cycle, any steady-state duty cycle, or any ramped-modal cycle.

(iii) You may use PFD to extract a proportional raw exhaust sample for any batch or continuous field-testing.

(iv) You may use PFD to extract a proportional diluted exhaust sample from a CVS for any batch or continuous emission sampling.

(v) You may use PFD to extract a constant raw or diluted exhaust sample for any continuous emission sampling.

(vi) You may use PFD to extract a constant raw or diluted exhaust sample for any steady-state emission sampling.

(2) Constant dilution-ratio PFD. Do one of the following for constant dilution-ratio PFD:

(i) Dilute an already proportional flow. For example, you may do this as a way of performing secondary dilution from a CVS tunnel to achieve overall dilution ratio for PM sampling.

(ii) Continuously measure constituent concentrations. For example, you might dilute to precondition a sample of raw exhaust to control its temperature, humidity, or constituent concentrations upstream of continuous analyzers. In this case, you must take into account the dilution ratio before multiplying the continuous concentration by the sampled exhaust flow rate.

(iii) Extract a proportional sample from a separate constant dilution ratio PFD system. For example, you might use a variable-flow pump to proportionally fill a gaseous storage medium such as a bag from a PFD system. In this case, the proportional sampling must meet the same specifications as varying dilution ratio PFD in paragraph (d)(3) of this section.

(iv) For each mode of a discrete-mode test (such as a locomotive notch setting or a specific setting for speed and torque), use a constant dilution ratio for any PM sampling. You must change the overall PM sampling system dilution ratio between modes so that the dilution ratio on the mode with the highest exhaust flow rate meets §1065.140(e)(2) and the dilution ratios on all other modes is higher than this (minimum) dilution ratio by the ratio of the maximum exhaust flow rate to the exhaust flow rate of the corresponding other mode. This is the same dilution ratio requirement for RMC or field transient testing. You must account for this change in dilution ratio in your emission calculations.

(3) Varying dilution-ratio PFD. All the following provisions apply for varying dilution-ratio PFD:

(i) Use a control system with sensors and actuators that can maintain proportional sampling over intervals as short as 200 ms (i.e., 5 Hz control).

(ii) For control input, you may use any sensor output from one or more measurements; for example, intake-air flow, fuel flow, exhaust flow, engine speed, and intake manifold temperature and pressure.

(iii) Account for any emission transit time in the PFD system, as necessary.

(iv) You may use preprogrammed data if they have been determined for the specific test site, duty cycle, and test engine from which you dilute emissions.

(v) We recommend that you run practice cycles to meet the validation criteria in §1065.545. Note that you must validate every emission test by meeting the validation criteria with the data from that specific test. Data from previously validated practice cycles or other tests may not be used to validate a different emission test.

(vi) You may not use a PFD system that requires preparatory tuning or calibration with a CVS or with the emission results from a CVS. Rather, you must be able to independently calibrate the PFD.

(e) *Dilution air temperature, dilution ratio, residence time, and temperature*

control of PM samples. Dilute PM samples at least once upstream of transfer lines. You may dilute PM samples upstream of a transfer line using full-flow dilution, or partial-flow dilution immediately downstream of a PM probe. In the case of partial-flow dilution, you may have up to 26 cm of insulated length between the end of the probe and the dilution stage, but we recommend that the length be as short as practical. The intent of these specifications is to minimize heat transfer to or from the emission sample before the final stage of dilution, other than the heat you may need to add to prevent aqueous condensation. This is accomplished by initially cooling the sample through dilution. Configure dilution systems as follows:

(1) Set the diluent (i.e., dilution air) temperature to (25 ± 5) °C. Use good engineering judgment to select a location to measure this temperature. We recommend that you measure this temperature as close as practical upstream of the point where diluent mixes with raw exhaust.

(2) For any PM dilution system (i.e., CVS or PFD), dilute raw exhaust with diluent such that the minimum overall ratio of diluted exhaust to raw exhaust is within the range of (5:1–7:1) and is at least 2:1 for any primary dilution stage. Base this minimum value on the maximum engine exhaust flow rate for a given test interval. Either measure the maximum exhaust flow during a practice run of the test interval or estimate it based on good engineering judgment (for example, you might rely on manufacturer-published literature).

(3) Configure any PM dilution system to have an overall residence time of (1 to 5) s, as measured from the location of initial diluent introduction to the location where PM is collected on the sample media. Also configure the system to have a residence time of at least 0.5 s, as measured from the location of final diluent introduction to the location where PM is collected on the sample media. When determining residence times within sampling system volumes, use an assumed flow temperature of 25 °C and pressure of 101.325 kPa.

(4) Control sample temperature to a (47 ±5) °C tolerance, as measured anywhere within 20 cm upstream or downstream of the PM storage media (such as a filter). Measure this temperature with a bare-wire junction thermocouple with wires that are (0.500 ±0.025) mm diameter, or with another suitable instrument that has equivalent performance.

[73 FR 37294, June 30, 2008, as amended at 75 FR 23029, Apr. 30, 2010; 75 FR 68462, Nov. 8, 2010]

§ 1065.145 Gaseous and PM probes, transfer lines, and sampling system components.

(a) *Continuous and batch sampling.* Determine the total mass of each constituent with continuous or batch sampling, as described in § 1065.15(c)(2). Both types of sampling systems have probes, transfer lines, and other sampling system components that are described in this section.

(b) Options for engines with multiple exhaust stacks. Measure emissions from a test engine as described in this paragraph (b) if it has multiple exhaust stacks. You may choose to use different measurement procedures for different pollutants under this paragraph (b) for a given test. For purposes of this part 1065, the test engine includes all the devices related to converting the chemical energy in the fuel to the engine's mechanical output energy. This may or may not involve vehicle- or equipment-based devices. For example, all of an engine's cylinders are considered to be part of the test engine even if the exhaust is divided into separate exhaust stacks. As another example, all the cylinders of a diesel-electric locomotive are considered to be part of the test engine even if they transmit power through separate output shafts, such as might occur with multiple engine-generator sets working in tandem. Use one of the following procedures to measure emissions with multiple exhaust stacks:

(1) Route the exhaust flow from the multiple stacks into a single flow as described in § 1065.130(c)(6). Sample and measure emissions after the exhaust streams are mixed. Calculate the emissions as a single sample from the entire engine. We recommend this as the preferred option, since it requires only a single measurement and calculation of

the exhaust molar flow for the entire engine.

(2) Sample and measure emissions from each stack and calculate emissions separately for each stack. Add the mass (or mass rate) emissions from each stack to calculate the emissions from the entire engine. Testing under this paragraph (b)(2) requires measuring or calculating the exhaust molar flow for each stack separately. If the exhaust molar flow in each stack cannot be calculated from combustion air flow(s), fuel flow(s), and measured gaseous emissions, and it is impractical to measure the exhaust molar flows directly, you may alternatively proportion the engine's calculated total exhaust molar flow rate (where the flow is calculated using combustion air mass flow(s), fuel mass flow(s), and emissions concentrations) based on exhaust molar flow measurements in each stack using a less accurate, nontraceable method. For example, you may use a total pressure probe and static pressure measurement in each stack.

(3) Sample and measure emissions from one stack and repeat the duty cycle as needed to collect emissions from each stack separately. Calculate the emissions from each stack and add the separate measurements to calculate the mass (or mass rate) emissions from the entire engine. Testing under this paragraph (b)(3) requires measuring or calculating the exhaust molar flow for each stack separately. You may alternatively proportion the engine's calculated total exhaust molar flow rate based on calculation and measurement limitations as described in paragraph (b)(2) of this section. Use the average of the engine's total power or work values from the multiple test runs to calculate brake-specific emissions. Divide the total mass (or mass rate) of each emission by the average power (or work). You may alternatively use the engine power or work associated with the corresponding stack during each test run if these values can be determined for each stack separately.

(4) Sample and measure emissions from each stack separately and calculate emissions for the entire engine based on the stack with the highest concentration. Testing under this paragraph (b)(4) requires only a single exhaust flow measurement or calculation for the entire engine. You may determine which stack has the highest concentration by performing multiple test runs, reviewing the results of earlier tests, or using good engineering judgment. Note that the highest concentration of different pollutants may occur in different stacks. Note also that the stack with the highest concentration of a pollutant during a test interval for field testing may be a different stack than the one you identified based on average concentrations over a duty cycle.

(5) Sample emissions from each stack separately and combine the wet sample streams from each stack proportionally to the exhaust molar flows in each stack. Measure the emission concentrations and calculate the emissions for the entire engine based on these weighted concentrations. Testing under this paragraph (b)(5) requires measuring or calculating the exhaust molar flow for each stack separately during the test run to proportion the sample streams from each stack. If it is impractical to measure the exhaust molar flows directly, you may alternatively proportion the wet sample streams based on less accurate, nontraceable flow methods. For example, you may use a total pressure probe and static pressure measurement in each stack. The following restrictions apply for testing under this paragraph (b)(5):

(i) You must use an accurate, traceable measurement or calculation of the engine's total exhaust molar flow rate for calculating the mass of emissions from the entire engine.

(ii) You may dry the single, combined, proportional sample stream; you may not dry the sample streams from each stack separately.

(iii) You must measure and proportion the sample flows from each stack with active flow controls. For PM sampling, you must measure and proportion the diluted sample flows from each stack with active flow controls that use only smooth walls with no sudden change in cross-sectional area. For example, you may control the dilute exhaust PM sample flows using electrically conductive vinyl tubing

and a control device that pinches the tube over a long enough transition length so no flow separation occurs.

(iv) For PM sampling, the transfer lines from each stack must be joined so the angle of the joining flows is 12.5° or less. Note that the exhaust manifold must meet the same specifications as the transfer line according to paragraph (d) of this section.

(6) Sample emissions from each stack separately and combine the wet sample streams from each stack equally. Measure the emission concentrations and calculate the emissions for the entire engine based on these measured concentrations. Testing under this paragraph (b)(6) assumes that the raw-exhaust and sample flows are the same for each stack. The following restrictions apply for testing under this paragraph (b)(6):

(i) You must measure and demonstrate that the sample flow from each stack is within 5% of the value from the stack with the highest sample flow. You may alternatively ensure that the stacks have equal flow rates without measuring sample flows by designing a passive sampling system that meets the following requirements:

(A) The probes and transfer line branches must be symmetrical, have equal lengths and diameters, have the same number of bends, and have no filters.

(B) If probes are designed such that they are sensitive to stack velocity, the stack velocity must be similar at each probe. For example, a static pressure probe used for gaseous sampling is not sensitive to stack velocity.

(C) The stack static pressure must be the same at each probe. You can meet this requirement by placing probes at the end of stacks that are vented to atmosphere.

(D) For PM sampling, the transfer lines from each stack must be joined so the angle of the joining flows is 12.5° or less. Note that the exhaust manifold must meet the same specifications as the transfer line according to paragraph (d) of this section.

(ii) You may use the procedure in this paragraph (b)(6) only if you perform an analysis showing that the resulting error due to imbalanced stack flows and concentrations is either at or below 2%. You may alternatively show that the resulting error does not impact your ability to demonstrate compliance with applicable standards. For example, you may use less accurate, non-traceable measurements of emission concentrations and molar flow in each stack and demonstrate that the imbalances in flows and concentrations cause 2% or less error.

(iii) For a two-stack engine, you may use the procedure in this paragraph (b)(6) only if you can show that the stack with the higher flow has the lower average concentration for each pollutant over the duty cycle.

(iv) You must use an accurate, traceable measurement or calculation of the engine's total exhaust molar flow rate for calculating the mass of emissions from the entire engine.

(v) You may dry the single, equally combined, sample stream; you may not dry the sample streams from each stack separately.

(vi) You may determine your exhaust flow rates with a chemical balance of exhaust gas concentrations and either intake air flow or fuel flow.

(c) *Gaseous and PM sample probes.* A probe is the first fitting in a sampling system. It protrudes into a raw or diluted exhaust stream to extract a sample, such that its inside and outside surfaces are in contact with the exhaust. A sample is transported out of a probe into a transfer line, as described in paragraph (d) of this section. The following provisions apply to sample probes:

(1) *Probe design and construction.* Use sample probes with inside surfaces of 300 series stainless steel or, for raw exhaust sampling, use any nonreactive material capable of withstanding raw exhaust temperatures. Locate sample probes where constituents are mixed to their mean sample concentration. Take into account the mixing of any crankcase emissions that may be routed into the raw exhaust. Locate each probe to minimize interference with the flow to other probes. We recommend that all probes remain free from influences of boundary layers, wakes, and eddies—especially near the outlet of a raw-exhaust tailpipe where unintended dilution might occur. Make sure that purging or back-flushing of a probe does not

influence another probe during testing. You may use a single probe to extract a sample of more than one constituent as long as the probe meets all the specifications for each constituent.

(2) *Gaseous sample probes.* Use either single-port or multi-port probes for sampling gaseous emissions. You may orient these probes in any direction relative to the raw or diluted exhaust flow. For some probes, you must control sample temperatures, as follows:

(i) For probes that extract NO_X from diluted exhaust, control the probe's wall temperature to prevent aqueous condensation.

(ii) For probes that extract hydrocarbons for THC or NMHC analysis from the diluted exhaust of compression-ignition engines, 2-stroke spark-ignition engines, or 4-stroke spark-ignition engines below 19 kW, we recommend heating the probe to minimize hydrocarbon contamination consistent with good engineering judgment. If you routinely fail the contamination check in the 1065.520 pretest check, we recommend heating the probe section to approximately 190 °C to minimize contamination.

(3) *PM sample probes.* Use PM probes with a single opening at the end. Orient PM probes to face directly upstream. If you shield a PM probe's opening with a PM pre-classifier such as a hat, you may not use the preclassifier we specify in paragraph (f)(1) of this section. We recommend sizing the inside diameter of PM probes to approximate isokinetic sampling at the expected mean flow rate.

(d) *Transfer lines.* You may use transfer lines to transport an extracted sample from a probe to an analyzer, storage medium, or dilution system, noting certain restrictions for PM sampling in §1065.140(e). Minimize the length of all transfer lines by locating analyzers, storage media, and dilution systems as close to probes as practical. We recommend that you minimize the number of bends in transfer lines and that you maximize the radius of any unavoidable bend. Avoid using 90° elbows, tees, and cross-fittings in transfer lines. Where such connections and fittings are necessary, take steps, using good engineering judgment, to ensure that you meet the temperature tolerances in this paragraph (d). This may involve measuring temperature at various locations within transfer lines and fittings. You may use a single transfer line to transport a sample of more than one constituent, as long as the transfer line meets all the specifications for each constituent. The following construction and temperature tolerances apply to transfer lines:

(1) *Gaseous samples.* Use transfer lines with inside surfaces of 300 series stainless steel, PTFE, Viton™, or any other material that you demonstrate has better properties for emission sampling. For raw exhaust sampling, use a nonreactive material capable of withstanding raw exhaust temperatures. You may use in-line filters if they do not react with exhaust constituents and if the filter and its housing meet the same temperature requirements as the transfer lines, as follows:

(i) For NO_X transfer lines upstream of either an NO_2-to-NO converter that meets the specifications of §1065.378 or a chiller that meets the specifications of §1065.376, maintain a sample temperature that prevents aqueous condensation.

(ii) For THC transfer lines for testing compression-ignition engines, 2-stroke spark-ignition engines, or 4-stroke spark-ignition engines below 19 kW, maintain a wall temperature tolerance throughout the entire line of (191 ±11) °C. If you sample from raw exhaust, you may connect an unheated, insulated transfer line directly to a probe. Design the length and insulation of the transfer line to cool the highest expected raw exhaust temperature to no lower than 191 °C, as measured at the transfer line's outlet. For dilute sampling, you may use a transition zone between the probe and transfer line of up to 92 cm to allow your wall temperature to transition to (191 ±11) °C.

(2) *PM samples.* We recommend heated transfer lines or a heated enclosure to minimize temperature differences between transfer lines and exhaust constituents. Use transfer lines that are inert with respect to PM and are electrically conductive on the inside surfaces. We recommend using PM transfer lines made of 300 series stainless steel. Electrically ground the inside surface of PM transfer lines.

(e) *Optional sample-conditioning components for gaseous sampling*. You may use the following sample-conditioning components to prepare gaseous samples for analysis, as long as you do not install or use them in a way that adversely affects your ability to show that your engines comply with all applicable gaseous emission standards.

(1) *NO_2-to-NO converter*. You may use an NO_2-to-NO converter that meets the converter conversion verification specified in §1065.378 at any point upstream of a NO_X analyzer, sample bag, or other storage medium.

(2) *Sample dryer*. You may use either type of sample dryer described in this paragraph (e)(2) to decrease the effects of water on gaseous emission measurements. You may not use a chemical dryer, or use dryers upstream of PM sample filters.

(i) *Osmotic-membrane*. You may use an osmotic-membrane dryer upstream of any gaseous analyzer or storage medium, as long as it meets the temperature specifications in paragraph (d)(1) of this section. Because osmotic-membrane dryers may deteriorate after prolonged exposure to certain exhaust constituents, consult with the membrane manufacturer regarding your application before incorporating an osmotic-membrane dryer. Monitor the dewpoint, T_{dew}, and absolute pressure, p_{total}, downstream of an osmotic-membrane dryer. You may use continuously recorded values of T_{dew} and p_{total} in the amount of water calculations specified in §1065.645. For our testing we may use average temperature and pressure values over the test interval or a nominal pressure value that we estimate as the dryer's average pressure expected during testing as constant values in the amount of water calculations specified in §1065.645. For your testing, you may use the maximum temperature or minimum pressure values observed during a test interval or duty cycle or the high alarm temperature setpoint or low alarm pressure setpoint as constant values in the calculations specified in §1065.645. For your testing, you may also use a nominal p_{total}, which you may estimate as the dryer's lowest absolute pressure expected during testing.

(ii) *Thermal chiller*. You may use a thermal chiller upstream of some gas analyzers and storage media. You may not use a thermal chiller upstream of a THC measurement system for compression-ignition engines, 2-stroke spark-ignition engines, or 4-stroke spark-ignition engines below 19 kW. If you use a thermal chiller upstream of an NO_2-to-NO converter or in a sampling system without an NO_2-to-NO converter, the chiller must meet the NO_2 loss-performance check specified in §1065.376. Monitor the dewpoint, T_{dew}, and absolute pressure, p_{total}, downstream of a thermal chiller. You may use continuously recorded values of T_{dew} and p_{total} in the amount of water calculations specified in §1065.645. If it is valid to assume the degree of saturation in the thermal chiller, you may calculate T_{dew} based on the known chiller performance and continuous monitoring of chiller temperature, $T_{chiller}$. If it is valid to assume a constant temperature offset between $T_{chiller}$ and T_{dew}, due to a known and fixed amount of sample reheat between the chiller outlet and the temperature measurement location, you may factor in this assumed temperature offset value into emission calculations. If we ask for it, you must show by engineering analysis or by data the validity of any assumptions allowed by this paragraph (e)(2)(ii). For our testing we may use average temperature and pressure values over the test interval or a nominal pressure value that we estimate as the dryer's average pressure expected during testing as constant values in the calculations specified in §1065.645. For your testing you may use the maximum temperature and minimum pressure values observed during a test interval or duty cycle or the high alarm temperature setpoint and the low alarm pressure setpoint as constant values in the amount of water calculations specified in §1065.645. For your testing you may also use a nominal p_{total}, which you may estimate as the dryer's lowest absolute pressure expected during testing.

(3) *Sample pumps*. You may use sample pumps upstream of an analyzer or storage medium for any gas. Use sample pumps with inside surfaces of 300 series stainless steel, PTFE, or any

other material that you demonstrate has better properties for emission sampling. For some sample pumps, you must control temperatures, as follows:

(i) If you use a NO_X sample pump upstream of either an NO_2-to-NO converter that meets §1065.378 or a chiller that meets §1065.376, it must be heated to prevent aqueous condensation.

(ii) For testing compression-ignition engines, 2-stroke spark-ignition engines, or 4-stroke spark-ignition engines below 19 kW, if you use a THC sample pump upstream of a THC analyzer or storage medium, its inner surfaces must be heated to a tolerance of (191 ±11) °C.

(4) *Ammonia Scrubber*. You may use ammonia scrubbers for any or all gaseous sampling systems to prevent interference with NH_3, poisoning of the NO_2-to-NO converter, and deposits in the sampling system or analyzers. Follow the ammonia scrubber manufacturer's recommendations or use good engineering judgment in applying ammonia scrubbers.

(f) *Optional sample-conditioning components for PM sampling*. You may use the following sample-conditioning components to prepare PM samples for analysis, as long as you do not install or use them in a way that adversely affects your ability to show that your engines comply with the applicable PM emission standards. You may condition PM samples to minimize positive and negative biases to PM results, as follows:

(1) *PM preclassifier*. You may use a PM preclassifier to remove large-diameter particles. The PM preclassifier may be either an inertial impactor or a cyclonic separator. It must be constructed of 300 series stainless steel. The preclassifier must be rated to remove at least 50% of PM at an aerodynamic diameter of 10 μm and no more than 1% of PM at an aerodynamic diameter of 1 μm over the range of flow rates for which you use it. Follow the preclassifier manufacturer's instructions for any periodic servicing that may be necessary to prevent a buildup of PM. Install the preclassifier in the dilution system downstream of the last dilution stage. Configure the preclassifier outlet with a means of bypassing any PM sample media so the preclassifier flow may be stabilized before starting a test. Locate PM sample media within 75 cm downstream of the preclassifier's exit. You may not use this preclassifier if you use a PM probe that already has a preclassifier. For example, if you use a hat-shaped preclassifier that is located immediately upstream of the probe in such a way that it forces the sample flow to change direction before entering the probe, you may not use any other preclassifier in your PM sampling system.

(2) *Other components*. You may request to use other PM conditioning components upstream of a PM preclassifier, such as components that condition humidity or remove gaseous-phase hydrocarbons from the diluted exhaust stream. You may use such components only if we approve them under §1065.10.

[75 FR 23030, Apr. 30, 2010]

§1065.150 Continuous sampling.

You may use continuous sampling techniques for measurements that involve raw or dilute sampling. Make sure continuous sampling systems meet the specifications in §1065.145. Make sure continuous analyzers meet the specifications in subparts C and D of this part.

§1065.170 Batch sampling for gaseous and PM constituents.

Batch sampling involves collecting and storing emissions for later analysis. Examples of batch sampling include collecting and storing gaseous emissions in a bag or collecting and storing PM on a filter. You may use batch sampling to store emissions that have been diluted at least once in some way, such as with CVS, PFD, or BMD. You may use batch-sampling to store undiluted emissions.

(a) *Sampling methods*. If you extract from a constant-volume flow rate, sample at a constant-volume flow rate as follows:

(1) Validate proportional sampling after an emission test as described in §1065.545. Use good engineering judgment to select storage media that will not significantly change measured emission levels (either up or down). For example, do not use sample bags for

storing emissions if the bags are permeable with respect to emissions or if they offgas emissions to the extent that it affects your ability to demonstrate compliance with the applicable gaseous emission standards. As another example, do not use PM filters that irreversibly absorb or adsorb gases to the extent that it affects your ability to demonstrate compliance with the applicable PM emission standard.

(2) You must follow the requirements in § 1065.140(e)(2) related to PM dilution ratios. For each filter, if you expect the net PM mass on the filter to exceed 400 μg, assuming a 38 mm diameter filter stain area, you may take the following actions in sequence:

(i) For discrete-mode testing only, you may reduce sample time as needed to target a filter loading of 400 μg, but not below the minimum sample time specified in the standard-setting part.

(ii) Reduce filter face velocity as needed to target a filter loading of 400 μg, down to 50 cm/s or less.

(iii) Increase overall dilution ratio above the values specified in § 1065.140(e)(2) to target a filter loading of 400 μg.

(b) *Gaseous sample storage media.* Store gas volumes in sufficiently clean containers that minimally off-gas or allow permeation of gases. Use good engineering judgment to determine acceptable thresholds of storage media cleanliness and permeation. To clean a container, you may repeatedly purge and evacuate a container and you may heat it. Use a flexible container (such as a bag) within a temperature-controlled environment, or use a temperature controlled rigid container that is initially evacuated or has a volume that can be displaced, such as a piston and cylinder arrangement. Use containers meeting the specifications in the following table, noting that you may request to use other container materials under § 1065.10:

TABLE 1 OF § 1065.170—GASEOUS BATCH SAMPLING CONTAINER MATERIALS

Emissions	Engines	
	Compression-ignition, two-stroke spark ignition, 4-stroke spark-ignition <19 kW	All other engines
CO, CO_2, O_2, CH_4, C_2H_6, C_3H_8, NO, NO_2 [1].	Tedlar™,[2] Kynar™,[2] Teflon™,[3] or 300 series stainless steel[3].	Tedlar™,[2] Kynar™,[2] Teflon™,[3] or 300 series stainless steel[3]
THC, NMHC	Teflon™[4] or 300 series stainless steel[4]	Tedlar™,[2] Kynar™,[2] Teflon™,[3] or 300 series stainless steel[3]

[1] As long as you prevent aqueous condensation in storage container.
[2] Up to 40 °C.
[3] Up to 202 °C.
[4] At (191 ±11) °C.

(c) *PM sample media.* Apply the following methods for sampling particulate emissions:

(1) If you use filter-based sampling media to extract and store PM for measurement, your procedure must meet the following specifications:

(i) If you expect that a filter's total surface concentration of PM will exceed 400 μg, assuming a 38 mm diameter filter stain area, for a given test interval, you may use filter media with a minimum initial collection efficiency of 98%; otherwise you must use a filter media with a minimum initial collection efficiency of 99.7%. Collection efficiency must be measured as described in ASTM D2986–95a (incorporated by reference in § 1065.1010), though you may rely on the sample-media manufacturer's measurements reflected in their product ratings to show that you meet this requirement.

(ii) The filter must be circular, with an overall diameter of 46.50 ±0.6 mm and an exposed diameter of at least 38 mm. See the cassette specifications in paragraph (c)(1)(vii) of this section.

(iii) We highly recommend that you use a pure PTFE filter material that does not have any flow-through support bonded to the back and has an overall thickness of 40 ±20 μm. An inert

polymer ring may be bonded to the periphery of the filter material for support and for sealing between the filter cassette parts. We consider Polymethylpentene (PMP) and PTFE inert materials for a support ring, but other inert materials may be used. See the cassette specifications in paragraph (c)(1)(vii) of this section. We allow the use of PTFE-coated glass fiber filter material, as long as this filter media selection does not affect your ability to demonstrate compliance with the applicable standards, which we base on a pure PTFE filter material. Note that we will use pure PTFE filter material for compliance testing, and we may require you to use pure PTFE filter material for any compliance testing we require, such as for selective enforcement audits.

(iv) You may request to use other filter materials or sizes under the provisions of §1065.10.

(v) To minimize turbulent deposition and to deposit PM evenly on a filter, use a filter holder with a 12.5° (from center) divergent cone angle to transition from the transfer-line inside diameter to the exposed diameter of the filter face. Use 300 series stainless steel for this transition.

(vi) Maintain a filter face velocity near 100 cm/s with less than 5% of the recorded flow values exceeding 100 cm/s, unless you expect either the net PM mass on the filter to exceed 400 μg, assuming a 38 mm diameter filter stain area. Measure face velocity as the volumetric flow rate of the sample at the pressure upstream of the filter and temperature of the filter face as measured in §1065.140(e), divided by the filter's exposed area. You may use the exhaust stack or CVS tunnel pressure for the upstream pressure if the pressure drop through the PM sampler up to the filter is less than 2 kPa.

(vii) Use a clean cassette designed to the specifications of Figure 1 of §1065.170. In auto changer configurations, you may use cassettes of similar design. Cassettes must be made of one of the following materials: Delrin™, 300 series stainless steel, polycarbonate, acrylonitrile-butadiene-styrene (ABS) resin, or conductive polypropylene. We recommend that you keep filter cassettes clean by periodically washing or wiping them with a compatible solvent applied using a lint-free cloth. Depending upon your cassette material, ethanol (C_2H_5OH) might be an acceptable solvent. Your cleaning frequency will depend on your engine's PM and HC emissions.

(viii) If you keep the cassette in the filter holder after sampling, prevent flow through the filter until either the holder or cassette is removed from the PM sampler. If you remove the cassettes from filter holders after sampling, transfer the cassette to an individual container that is covered or sealed to prevent communication of semi-volatile matter from one filter to another. If you remove the filter holder, cap the inlet and outlet. Keep them covered or sealed until they return to the stabilization or weighing environments.

(ix) The filters should not be handled outside of the PM stabilization and weighing environments and should be loaded into cassettes, filter holders, or auto changer apparatus before removal from these environments.

(2) You may use other PM sample media that we approve under §1065.10, including non-filtering techniques. For example, you might deposit PM on an inert substrate that collects PM using electrostatic, thermophoresis, inertia, diffusion, or some other deposition mechanism, as approved.

Figure 1 of 1065.170

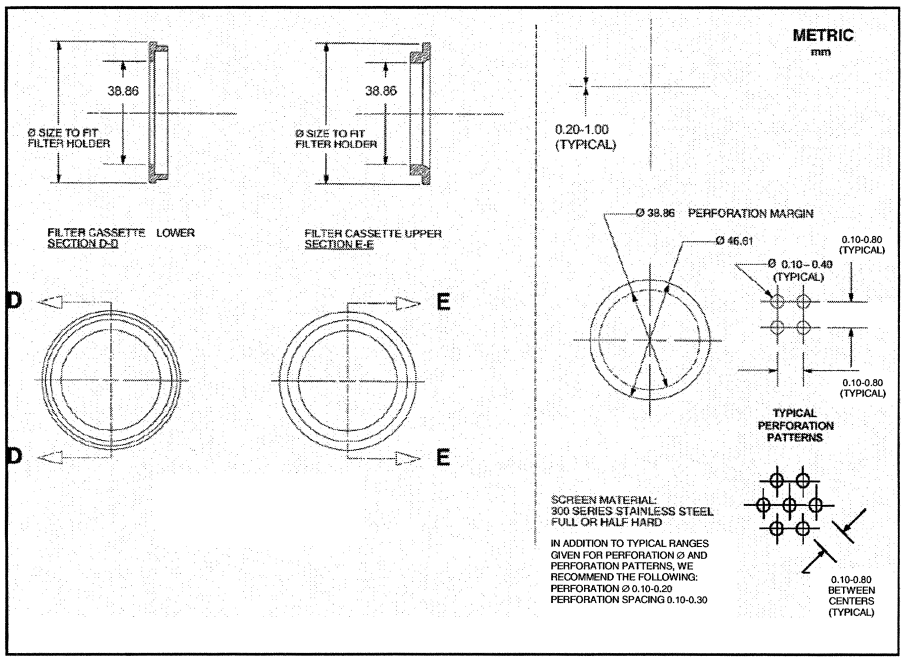

[70 FR 40516, July 13, 2005, as amended at 73 FR 37298, June 30, 2008; 73 FR 59321, Oct. 8, 2008]

§ 1065.190 PM-stabilization and weighing environments for gravimetric analysis.

(a) This section describes the two environments required to stabilize and weigh PM for gravimetric analysis: the PM stabilization environment, where filters are stored before weighing; and the weighing environment, where the balance is located. The two environments may share a common space. These volumes may be one or more rooms, or they may be much smaller, such as a glove box or an automated weighing system consisting of one or more countertop-sized environments.

(b) We recommend that you keep both the stabilization and the weighing environments free of ambient contaminants, such as dust, aerosols, or semi-volatile material that could contaminate PM samples. We recommend that these environments conform with an ''as-built'' Class Six clean room specification according to ISO 14644–1 (incorporated by reference in § 1065.1010); however, we also recommend that you deviate from ISO 14644–1 as necessary to minimize air motion that might affect weighing. We recommend maximum air-supply and air-return velocities of 0.05 m/s in the weighing environment.

(c) Verify the cleanliness of the PM-stabilization environment using reference filters, as described in § 1065.390(d).

(d) Maintain the following ambient conditions within the two environments during all stabilization and weighing:

(1) *Ambient temperature and tolerances.* Maintain the weighing environment at a tolerance of (22 ±1) °C. If the two environments share a common space, maintain both environments at a tolerance of (22 ±1) °C. If they are separate, maintain the stabilization environment at a tolerance of (22 ±3) °C.

(2) *Dewpoint*. Maintain a dewpoint of 9.5 °C in both environments. This dewpoint will control the amount of water associated with sulfuric acid (H_2SO_4) PM, such that 1.2216 grams of water will be associated with each gram of H_2SO_4.

(3) *Dewpoint tolerances*. If the expected fraction of sulfuric acid in PM is unknown, we recommend controlling dewpoint at within ±1 °C tolerance. This would limit any dewpoint-related change in PM to less than ±2%, even for PM that is 50% sulfuric acid. If you know your expected fraction of sulfuric acid in PM, we recommend that you select an appropriate dewpoint tolerance for showing compliance with emission standards using the following table as a guide:

TABLE 1 OF § 1065.190—DEWPOINT TOLERANCE AS A FUNCTION OF % PM CHANGE AND % SULFURIC ACID PM

Expected sulfuric acid fraction of PM (percent)	±0.5% PM mass change	±1.0% PM mass change	±2.0% PM mass change
5	±3.0 °C	±6.0 °C	±12 °C
50	±0.30 °C	±0.60 °C	±1.2 °C
100	±0.15 °C	±0.30 °C	±0.60 °C

(e) Verify the following ambient conditions using measurement instruments that meet the specifications in subpart C of this part:

(1) Continuously measure dewpoint and ambient temperature. Use these values to determine if the stabilization and weighing environments have remained within the tolerances specified in paragraph (d) of this section for at least 60 min. before weighing sample media (e.g., filters). We recommend that you use an interlock that automatically prevents the balance from reporting values if either of the environments have not been within the applicable tolerances for the past 60 min.

(2) Continuously measure atmospheric pressure within the weighing environment. An acceptable alternative is to use a barometer that measures atmospheric pressure outside the weighing environment, as long as you can ensure that atmospheric pressure at the balance is always within ±100 Pa of that outside environment during weighing operations. Record atmospheric pressure as you weigh filters, and use these pressure values to perform the buoyancy correction in § 1065.690.

(f) We recommend that you install a balance as follows:

(1) Install the balance on a vibration-isolation platform to isolate it from external noise and vibration.

(2) Shield the balance from convective airflow with a static-dissipating draft shield that is electrically grounded.

(3) Follow the balance manufacturer's specifications for all preventive maintenance.

(4) Operate the balance manually or as part of an automated weighing system.

(g) Minimize static electric charge in the balance environment, as follows:

(1) Electrically ground the balance.

(2) Use 300 series stainless steel tweezers if PM sample media (e.g., filters) must be handled manually.

(3) Ground tweezers with a grounding strap, or provide a grounding strap for the operator such that the grounding strap shares a common ground with the balance. Make sure grounding straps have an appropriate resistor to protect operators from accidental shock.

(4) Provide a static-electricity neutralizer that is electrically grounded in common with the balance to remove static charge from PM sample media (e.g., filters), as follows:

(i) You may use radioactive neutralizers such as a Polonium (^{210}Po) source. Replace radioactive sources at the intervals recommended by the neutralizer manufacturer.

(ii) You may use other neutralizers, such as corona-discharge ionizers. If you use a corona-discharge ionizer, we recommend that you monitor it for neutral net charge according to the ionizer manufacturer's recommendations.

(5) We recommend that you use a device to monitor the static charge of PM sample media (e.g., filter) surface.

(6) We recommend that you neutralize PM sample media (e.g., filters) to within ±2.0 V of neutral. Measure static voltages as follows:

(i) Measure static voltage of PM sample media (e.g., filters) according to the

electrostatic voltmeter manufacturer's instructions.

(ii) Measure static voltage of PM sample media (e.g., filters) while the media is at least 15 cm away from any grounded surfaces to avoid mirror image charge interference.

[70 FR 40516, July 13, 2005, as amended at 73 FR 37299, June 30, 2008; 73 FR 59323, Oct. 8, 2008]

§ 1065.195 PM-stabilization environment for in-situ analyzers.

(a) This section describes the environment required to determine PM in-situ. For in-situ analyzers, such as an inertial balance, this is the environment within a PM sampling system that surrounds the PM sample media (e.g., filters). This is typically a very small volume.

(b) Maintain the environment free of ambient contaminants, such as dust, aerosols, or semi-volatile material that could contaminate PM samples. Filter all air used for stabilization with HEPA filters. Ensure that HEPA filters are installed properly so that background PM does not leak past the HEPA filters.

(c) Maintain the following thermodynamic conditions within the environment before measuring PM:

(1) *Ambient temperature*. Select a nominal ambient temperature, T_{amb}, between (42 and 52) °C. Maintain the ambient temperature within ±1.0 °C of the selected nominal value.

(2) *Dewpoint*. Select a dewpoint, T_{dew}, that corresponds to T_{amb} such that $T_{dew} = (0.95T_{amb} - 11.40)$ °C. The resulting dewpoint will control the amount of water associated with sulfuric acid (H_2SO_4) PM, such that 1.1368 grams of water will be associated with each gram of H_2SO_4. For example, if you select a nominal ambient temperature of 47 °C, set a dewpoint of 33.3 °C.

(3) *Dewpoint tolerance*. If the expected fraction of sulfuric acid in PM is unknown, we recommend controlling dewpoint within ±1.0 °C. This would limit any dewpoint-related change in PM to less than ±2%, even for PM that is 50% sulfuric acid. If you know your expected fraction of sulfuric acid in PM, we recommend that you select an appropriate dewpoint tolerance for showing compliance with emission standards using Table 1 of §1065.190 as a guide:

(4) *Absolute pressure*. Use good engineering judgment to maintain a tolerance of absolute pressure if your PM measurement instrument requires it.

(d) Continuously measure dewpoint, temperature, and pressure using measurement instruments that meet the PM-stabilization environment specifications in subpart C of this part. Use these values to determine if the in-situ stabilization environment is within the tolerances specified in paragraph (c) of this section. Do not use any PM quantities that are recorded when any of these parameters exceed the applicable tolerances.

(e) If you use an inertial PM balance, we recommend that you install it as follows:

(1) Isolate the balance from any external noise and vibration that is within a frequency range that could affect the balance.

(2) Follow the balance manufacturer's specifications.

(f) If static electricity affects an inertial balance, you may use a static neutralizer, as follows:

(1) You may use a radioactive neutralizer such as a Polonium (^{210}Po) source or a Krypton (^{85}Kr) source. Replace radioactive sources at the intervals recommended by the neutralizer manufacturer.

(2) You may use other neutralizers, such as a corona-discharge ionizer. If you use a corona-discharge ionizer, we recommend that you monitor it for neutral net charge according to the ionizer manufacturer's recommendations.

[70 FR 40516, July 13, 2005, as amended at 73 FR 32799, June 30, 2008]

Subpart C—Measurement Instruments

§ 1065.201 Overview and general provisions.

(a) *Scope*. This subpart specifies measurement instruments and associated system requirements related to emission testing in a laboratory or similar environment and in the field. This includes laboratory instruments and portable emission measurement systems (PEMS) for measuring engine

parameters, ambient conditions, flow-related parameters, and emission concentrations.

(b) *Instrument types.* You may use any of the specified instruments as described in this subpart to perform emission tests. If you want to use one of these instruments in a way that is not specified in this subpart, or if you want to use a different instrument, you must first get us to approve your alternate procedure under §1065.10. Where we specify more than one instrument for a particular measurement, we may identify which instrument serves as the reference for comparing with an alternate procedure.

(c) *Measurement systems.* Assemble a system of measurement instruments that allows you to show that your engines comply with the applicable emission standards, using good engineering judgment. When selecting instruments, consider how conditions such as vibration, temperature, pressure, humidity, viscosity, specific heat, and exhaust composition (including trace concentrations) may affect instrument compatibility and performance.

(d) *Redundant systems.* For all measurement instruments described in this subpart, you may use data from multiple instruments to calculate test results for a single test. If you use redundant systems, use good engineering judgment to use multiple measured values in calculations or to disregard individual measurements. Note that you must keep your results from all measurements, as described in §1065.25. This requirements applies whether or not you actually use the measurements in your calculations.

(e) *Range.* You may use an instrument's response above 100% of its operating range if this does not affect your ability to show that your engines comply with the applicable emission standards. Note that we require additional testing and reporting if an analyzer responds above 100% of its range. See §1065.550. Auto-ranging analyzers do not require additional testing or reporting.

(f) *Related subparts for laboratory testing.* Subpart D of this part describes how to evaluate the performance of the measurement instruments in this subpart. In general, if an instrument is specified in a specific section of this subpart, its calibration and verifications are typically specified in a similarly numbered section in subpart D of this part. For example, §1065.290 gives instrument specifications for PM balances and §1065.390 describes the corresponding calibrations and verifications. Note that some instruments also have other requirements in other sections of subpart D of this part. Subpart B of this part identifies specifications for other types of equipment, and subpart H of this part specifies engine fluids and analytical gases.

(g) *Field testing and testing with PEMS.* Subpart J of this part describes how to use these and other measurement instruments for field testing and other PEMS testing.

(h) *Recommended practices.* This subpart identifies a variety of recommended but not required practices for proper measurements. We believe in most cases it is necessary to follow these recommended practices for accurate and repeatable measurements. However, we do not specifically require you to follow these recommended practices to perform a valid test, as long as you meet the required calibrations and verifications of measurement systems specified in subpart D of this part. Similarly, we are not required to follow all recommended practices, as long as we meet the required calibrations and verifications. Our decision to follow or not follow a given recommendation when testing your engine is not dependent on whether or not you followed it during your testing.

[70 FR 40516, July 13, 2005, as amended at 73 FR 37299, June 30, 2008; 75 FR 23033, Apr. 30, 2010]

§1065.202 Data updating, recording, and control.

Your test system must be able to update data, record data and control systems related to operator demand, the dynamometer, sampling equipment, and measurement instruments. Use data acquisition and control systems that can record at the specified minimum frequencies, as follows:

TABLE 1 OF § 1065.202—DATA RECORDING AND CONTROL MINIMUM FREQUENCIES

Applicable test protocol section	Measured values	Minimum command and control frequency	Minimum recording frequency
§ 1065.510	Speed and torque during an engine step-map.	1 Hz	1 mean value per step.
§ 1065.510	Speed and torque during an engine sweep-map.	5 Hz	1 Hz means.
§ 1065.514, § 1065.530	Transient duty cycle reference and feedback speeds and torques.	5 Hz	1 Hz means.
§ 1065.514, § 1065.530	Steady-state and ramped-modal duty cycle reference and feedback speeds and torques.	1 Hz	1 Hz.
§ 1065.520, § 1065.530, § 1065.550	Continuous concentrations of raw or dilute analyzers.	N/A	1 Hz.
§ 1065.520, § 1065.530, § 1065.550	Batch concentrations of raw or dilute analyzers.	N/A	1 mean value per test interval.
§ 1065.530, § 1065.545	Diluted exhaust flow rate from a CVS with a heat exchanger upstream of the flow measurement.	N/A	1 Hz.
§ 1065.530, § 1065.545	Diluted exhaust flow rate from a CVS without a heat exchanger upstream of the flow measurement.	5 Hz	1 Hz means.
§ 1065.530, § 1065.545	Intake-air or raw-exhaust flow rate	N/A	1 Hz means.
§ 1065.530, § 1065.545	Dilution air if actively controlled	5 Hz	1 Hz means.
§ 1065.530	Sample flow from a CVS that has a heat exchanger.	1 Hz	1 Hz.
§ 1065.530, § 1065.545	Sample flow from a CVS does not have a heat exchanger.	5 Hz	1 Hz mean.

§ 1065.205 Performance specifications for measurement instruments.

Your test system as a whole must meet all the applicable calibrations, verifications, and test-validation criteria specified in subparts D and F of this part or subpart J of this part for using PEMS and for performing field testing. We recommend that your instruments meet the specifications in Table 1 of this section for all ranges you use for testing. We also recommend that you keep any documentation you receive from instrument manufacturers showing that your instruments meet the specifications in Table 1 of this section.

Table 1 of §1065.205–Recommended performance specifications for measurement instruments

Measurement Instrument	Measured quantity symbol	Complete System Rise time (t_{10-90}) and Fall time (t_{90-10})[a]	Recording update frequency	Accuracy[b]	Repeatability[b]	Noise[b]
Engine speed transducer	f_n	1 s	1 Hz means	2.0 % of pt. or 0.5 % of max.	1.0 % of pt. or 0.25 % of max.	0.05 % of max
Engine torque transducer	T	1 s	1 Hz means	2.0 % of pt. or 1.0 % of max.	1.0 % of pt. or 0.5 % of max	0.05 % of max.
Electrical work (active-power meter)	W	1 s	1 Hz means	2.0 % of pt. or 0.5 % of max.	1.0 % of pt. or 0.25 % of max.	0.05 % of max
General pressure transducer (not a part of another instrument)	p	5 s	1 Hz	2.0 % of pt. or 1.0 % of max.	1.0 % of pt. or 0.50 % of max.	0.1 % of max
Atmospheric pressure meter used for PM-stabilization and balance environments	p_{atmos}	50 s	5 times per hour	50 Pa	25 Pa	5 Pa
General purpose atmospheric pressure meter	p_{atmos}	50 s	5 times per hour	250 Pa	100Pa	50 Pa
Temperature sensor for PM-stabilization and balance environments	T	50 s	0.1 Hz	0.25 K	0.1 K	0.1 K
Other temperature sensor (not a part of another instrument)	T	10 s	0.5 Hz	0.4 % of pt. K or 0.2 % of max. K	0.2 % of pt. K or 0.1 % of max. K	0.1 % of max
Dewpoint sensor for intake air, PM-stabilization and balance environments	T_{dew}	50 s	0.1 Hz	0.25 K	0.1 K	0.02 K
Other dewpoint sensor	T_{dew}	50 s	0.1 Hz	1 K	0.5 K	0.1 K
Fuel flow meter (Fuel totalizer)	$\dot{m}$	5 s (N/A)	1 Hz (N/A)	2.0 % of pt. or 1.5 % of max.	1.0 % of pt. or 0.75 % of max.	0.5 % of max.
Total diluted exhaust meter (CVS) (With heat exchanger before meter)	$\dot{n}$	1 s (5 s)	1 Hz means (1 Hz)	2.0 % of pt. or 1.5 % of max.	1.0 % of pt. or 0.75 % of max.	1.0 % of max.

Dilution air, inlet air, exhaust, and sample flow meters	$\dot{n}$	1 s	1 Hz means of 5 Hz samples	2.5 % of pt. or 1.5 % of max.	1.25 % of pt. or 0.75 % of max.	1.0 % of max.
Continuous gas analyzer	x	5 s	1 Hz	2.0 % of pt. or 2.0 % of meas.	1.0 % of pt. or 1.0 % of meas.	1.0 % of max.
Batch gas analyzer	x	N/A	N/A	2.0 % of pt. or 2.0 % of meas.	1.0 % of pt. or 1.0 % of meas.	1.0 % of max.
Gravimetric PM balance	m_{PM}	N/A	N/A	See §1065.790	0.5 µg	N/A
Inertial PM balance	m_{PM}	5 s	1 Hz	2.0 % of pt. or 2.0 % of meas.	1.0 % of pt. or 1.0 % of meas.	0.2 % of max.

[a] The performance specifications identified in the table apply separately for rise time and fall time.

[b] Accuracy, repeatability, and noise are all determined with the same collected data, as described in §1065.305, and based on absolute values. "pt." refers to the overall flow-weighted mean value expected at the standard; "max." refers to the peak value expected at the standard over any test interval, not the maximum of the instrument's range; "meas" refers to the actual flow-weighted mean measured over any test interval.

[75 FR 23033, Apr. 30, 2010]

MEASUREMENT OF ENGINE PARAMETERS AND AMBIENT CONDITIONS

§ 1065.210 Work input and output sensors.

(a) *Application.* Use instruments as specified in this section to measure work inputs and outputs during engine operation. We recommend that you use sensors, transducers, and meters that meet the specifications in Table 1 of § 1065.205. Note that your overall systems for measuring work inputs and outputs must meet the linearity verifications in § 1065.307. We recommend that you measure work inputs and outputs where they cross the system boundary as shown in Figure 1 of § 1065.210. The system boundary is different for air-cooled engines than for liquid-cooled engines. If you choose to measure work before or after a work conversion, relative to the system boundary, use good engineering judgment to estimate any work-conversion losses in a way that avoids overestimation of total work. For example, if it is impractical to instrument the shaft of an exhaust turbine generating electrical work, you may decide to measure its converted electrical work. As another example, you may decide to measure the tractive (i.e., electrical output) power of a locomotive, rather than the brake power of the locomotive engine. In these cases, divide the electrical work by accurate values of electrical generator efficiency ($\eta<1$), or assume an efficiency of 1 ($\eta=1$), which would over-estimate brake-specific emissions. For the example of using locomotive tractive power with a generator efficiency of 1 ($\eta=1$), this means using the tractive power as the brake power in emission calculations. Do not underestimate any work conversion efficiencies for any components outside the system boundary that do not return work into the system boundary. And do not overestimate any work conversion efficiencies for components outside the system boundary that do return work into the system boundary. In all cases, ensure that you are able to accurately demonstrate compliance with the applicable standards.

Figure 1 of §1065.210: Work inputs, outputs, and system boundaries for liquid-cooled and air-cooled engines.

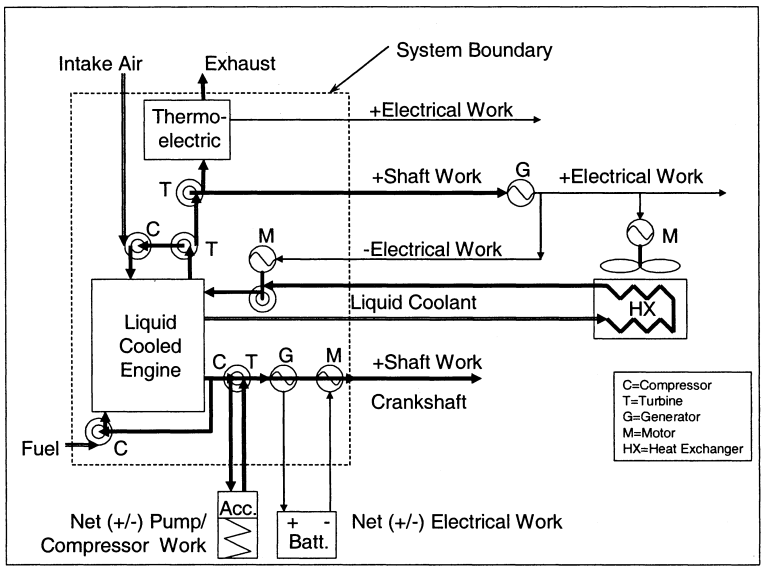

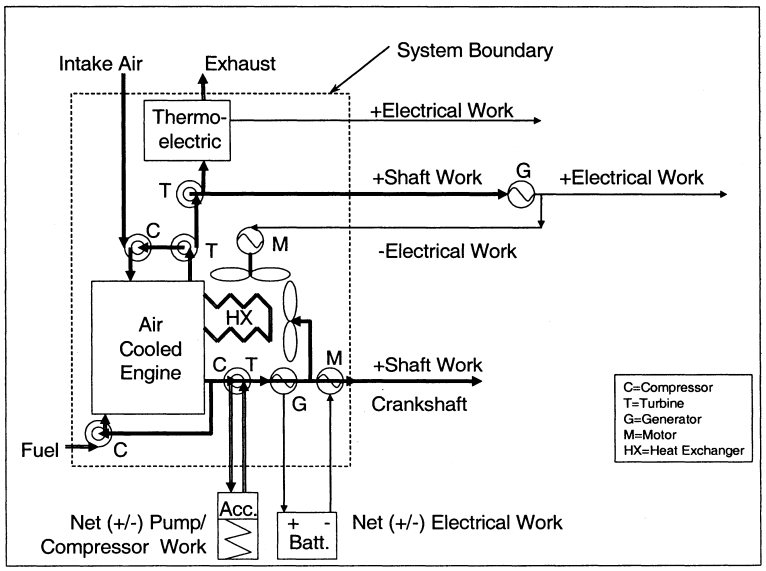

(b) *Shaft work.* Use speed and torque transducer outputs to calculate total work according to §1065.650.

(1) *Speed.* Use a magnetic or optical shaft-position detector with a resolution of at least 60 counts per revolution, in combination with a frequency

counter that rejects common-mode noise.

(2) *Torque*. You may use a variety of methods to determine engine torque. As needed, and based on good engineering judgment, compensate for torque induced by the inertia of accelerating and decelerating components connected to the flywheel, such as the drive shaft and dynamometer rotor. Use any of the following methods to determine engine torque:

(i) Measure torque by mounting a strain gage or similar instrument in-line between the engine and dynamometer.

(ii) Measure torque by mounting a strain gage or similar instrument on a lever arm connected to the dynamometer housing.

(iii) Calculate torque from internal dynamometer signals, such as armature current, as long as you calibrate this measurement as described in § 1065.310.

(c) *Electrical work*. Use a watt-hour meter output to calculate total work according to § 1065.650. Use a watt-hour meter that outputs active power (kW). Watt-hour meters typically combine a Wheatstone bridge voltmeter and a Hall-effect clamp-on ammeter into a single microprocessor-based instrument that analyzes and outputs several parameters, such as alternating or direct current voltage (V), current (A), power factor (pf), apparent power (VA), reactive power (VAR), and active power (W).

(d) *Pump, compressor or turbine work*. Use pressure transducer and flow-meter outputs to calculate total work according to § 1065.650. For flow meters, see § 1065.220 through § 1065.248.

[70 FR 40516, July 13, 2005, as amended at 73 FR 37300, June 30, 2008]

§ 1065.215 Pressure transducers, temperature sensors, and dewpoint sensors.

(a) *Application*. Use instruments as specified in this section to measure pressure, temperature, and dewpoint.

(b) *Component requirements*. We recommend that you use pressure transducers, temperature sensors, and dewpoint sensors that meet the specifications in Table 1 of § 1065.205. Note that your overall systems for measuring pressure, temperature, and dewpoint must meet the calibration and verifications in § 1065.315.

(c) *Temperature*. For PM-balance environments or other precision temperature measurements over a narrow temperature range, we recommend thermistors. For other applications we recommend thermocouples that are not grounded to the thermocouple sheath. You may use other temperature sensors, such as resistive temperature detectors (RTDs).

(d) *Pressure*. Pressure transducers must be located in a temperature-controlled environment, or they must compensate for temperature changes over their expected operating range. Transducer materials must be compatible with the fluid being measured. For atmospheric pressure or other precision pressure measurements, we recommend either capacitance-type, quartz crystal, or laser-interferometer transducers. For other applications, we recommend either strain gage or capacitance-type pressure transducers. You may use other pressure-measurement instruments, such as manometers, where appropriate.

(e) *Dewpoint*. For PM-stabilization environments, we recommend chilled-surface hygrometers, which include chilled mirror detectors and chilled surface acoustic wave (SAW) detectors. For other applications, we recommend thin-film capacitance sensors. You may use other dewpoint sensors, such as a wet-bulb/dry-bulb psychrometer, where appropriate.

[70 FR 40516, July 13, 2005, as amended at 73 FR 37300, June 30, 2008]

FLOW-RELATED MEASUREMENTS

§ 1065.220 Fuel flow meter.

(a) *Application*. You may use fuel flow in combination with a chemical balance of carbon (or oxygen) between the fuel, inlet air, and raw exhaust to calculate raw exhaust flow as described in § 1065.650, as follows:

(1) Use the actual value of calculated raw exhaust flow rate in the following cases:

(i) For multiplying raw exhaust flow rate with continuously sampled concentrations.

(ii) For multiplying total raw exhaust flow with batch-sampled concentrations.

(2) In the following cases, you may use a fuel flow meter signal that does not give the actual value of raw exhaust, as long as it is linearly proportional to the exhaust molar flow rate's actual calculated value:

(i) For feedback control of a proportional sampling system, such as a partial-flow dilution system.

(ii) For multiplying with continuously sampled gas concentrations, if the same signal is used in a chemical-balance calculation to determine work from brake-specific fuel consumption and fuel consumed.

(b) *Component requirements.* We recommend that you use a fuel flow meter that meets the specifications in Table 1 of § 1065.205. We recommend a fuel flow meter that measures mass directly, such as one that relies on gravimetric or inertial measurement principles. This may involve using a meter with one or more scales for weighing fuel or using a Coriolis meter. Note that your overall system for measuring fuel flow must meet the linearity verification in § 1065.307 and the calibration and verifications in § 1065.320.

(c) *Recirculating fuel.* In any fuel-flow measurement, account for any fuel that bypasses the engine or returns from the engine to the fuel storage tank.

(d) *Flow conditioning.* For any type of fuel flow meter, condition the flow as needed to prevent wakes, eddies, circulating flows, or flow pulsations from affecting the accuracy or repeatability of the meter. You may accomplish this by using a sufficient length of straight tubing (such as a length equal to at least 10 pipe diameters) or by using specially designed tubing bends, straightening fins, or pneumatic pulsation dampeners to establish a steady and predictable velocity profile upstream of the meter. Condition the flow as needed to prevent any gas bubbles in the fuel from affecting the fuel meter.

[70 FR 40516, July 13, 2005, as amended at 73 FR 37300, June 30, 2008]

§ 1065.225 Intake-air flow meter.

(a) *Application.* You may use an intake-air flow meter in combination with a chemical balance of carbon (or oxygen) between the fuel, inlet air, and raw exhaust to calculate raw exhaust flow as described in § 1065.650, as follows:

(1) Use the actual value of calculated raw exhaust in the following cases:

(i) For multiplying raw exhaust flow rate with continuously sampled concentrations.

(ii) For multiplying total raw exhaust flow with batch-sampled concentrations.

(2) In the following cases, you may use an intake-air flow meter signal that does not give the actual value of raw exhaust, as long as it is linearly proportional to the exhaust flow rate's actual calculated value:

(i) For feedback control of a proportional sampling system, such as a partial-flow dilution system.

(ii) For multiplying with continuously sampled gas concentrations, if the same signal is used in a chemical-balance calculation to determine work from brake-specific fuel consumption and fuel consumed.

(b) *Component requirements.* We recommend that you use an intake-air flow meter that meets the specifications in Table 1 of § 1065.205. This may include a laminar flow element, an ultrasonic flow meter, a subsonic venturi, a thermal-mass meter, an averaging Pitot tube, or a hot-wire anemometer. Note that your overall system for measuring intake-air flow must meet the linearity verification in § 1065.307 and the calibration in § 1065.325.

(c) *Flow conditioning.* For any type of intake-air flow meter, condition the flow as needed to prevent wakes, eddies, circulating flows, or flow pulsations from affecting the accuracy or repeatability of the meter. You may accomplish this by using a sufficient length of straight tubing (such as a length equal to at least 10 pipe diameters) or by using specially designed tubing bends, orifice plates or straightening fins to establish a predictable velocity profile upstream of the meter.

§ 1065.230 Raw exhaust flow meter.

(a) *Application*. You may use measured raw exhaust flow, as follows:

(1) Use the actual value of calculated raw exhaust in the following cases:

(i) Multiply raw exhaust flow rate with continuously sampled concentrations.

(ii) Multiply total raw exhaust with batch sampled concentrations.

(2) In the following cases, you may use a raw exhaust flow meter signal that does not give the actual value of raw exhaust, as long as it is linearly proportional to the exhaust flow rate's actual calculated value:

(i) For feedback control of a proportional sampling system, such as a partial-flow dilution system.

(ii) For multiplying with continuously sampled gas concentrations, if the same signal is used in a chemical-balance calculation to determine work from brake-specific fuel consumption and fuel consumed.

(b) *Component requirements*. We recommend that you use a raw-exhaust flow meter that meets the specifications in Table 1 of § 1065.205. This may involve using an ultrasonic flow meter, a subsonic venturi, an averaging Pitot tube, a hot-wire anemometer, or other measurement principle. This would generally not involve a laminar flow element or a thermal-mass meter. Note that your overall system for measuring raw exhaust flow must meet the linearity verification in § 1065.307 and the calibration and verifications in § 1065.330. Any raw-exhaust meter must be designed to appropriately compensate for changes in the raw exhaust's thermodynamic, fluid, and compositional states.

(c) *Flow conditioning*. For any type of raw exhaust flow meter, condition the flow as needed to prevent wakes, eddies, circulating flows, or flow pulsations from affecting the accuracy or repeatability of the meter. You may accomplish this by using a sufficient length of straight tubing (such as a length equal to at least 10 pipe diameters) or by using specially designed tubing bends, orifice plates or straightening fins to establish a predictable velocity profile upstream of the meter.

(d) *Exhaust cooling*. You may cool raw exhaust upstream of a raw-exhaust flow meter, as long as you observe all the following provisions:

(1) Do not sample PM downstream of the cooling.

(2) If cooling causes exhaust temperatures above 202 °C to decrease to below 180 °C, do not sample NMHC downstream of the cooling for compression-ignition engines, 2-stroke spark-ignition engines, and 4-stroke spark-ignition engines below 19 kW.

(3) If cooling causes aqueous condensation, do not sample NO_X downstream of the cooling unless the cooler meets the performance verification in § 1065.376.

(4) If cooling causes aqueous condensation before the flow reaches a flow meter, measure dewpoint, T_{dew} and pressure, p_{total} at the flow meter inlet. Use these values in emission calculations according to § 1065.650.

§ 1065.240 Dilution air and diluted exhaust flow meters.

(a) *Application*. Use a diluted exhaust flow meter to determine instantaneous diluted exhaust flow rates or total diluted exhaust flow over a test interval. You may use the difference between a diluted exhaust flow meter and a dilution air meter to calculate raw exhaust flow rates or total raw exhaust flow over a test interval.

(b) *Component requirements*. We recommend that you use a diluted exhaust flow meter that meets the specifications in Table 1 of § 1065.205. Note that your overall system for measuring diluted exhaust flow must meet the linearity verification in § 1065.307 and the calibration and verifications in § 1065.340 and § 1065.341. You may use the following meters:

(1) For constant-volume sampling (CVS) of the total flow of diluted exhaust, you may use a critical-flow venturi (CFV) or multiple critical-flow venturis arranged in parallel, a positive-displacement pump (PDP), a subsonic venturi (SSV), or an ultrasonic flow meter (UFM). Combined with an upstream heat exchanger, either a CFV or a PDP will also function as a passive flow controller in a CVS system. However, you may also combine any flow meter with any active flow control system to maintain proportional sampling

of exhaust constituents. You may control the total flow of diluted exhaust, or one or more sample flows, or a combination of these flow controls to maintain proportional sampling.

(2) For any other dilution system, you may use a laminar flow element, an ultrasonic flow meter, a subsonic venturi, a critical-flow venturi or multiple critical-flow venturis arranged in parallel, a positive-displacement meter, a thermal-mass meter, an averaging Pitot tube, or a hot-wire anemometer.

(c) *Flow conditioning*. For any type of diluted exhaust flow meter, condition the flow as needed to prevent wakes, eddies, circulating flows, or flow pulsations from affecting the accuracy or repeatability of the meter. For some meters, you may accomplish this by using a sufficient length of straight tubing (such as a length equal to at least 10 pipe diameters) or by using specially designed tubing bends, orifice plates or straightening fins to establish a predictable velocity profile upstream of the meter.

(d) *Exhaust cooling*. You may cool diluted exhaust upstream of a dilute-exhaust flow meter, as long as you observe all the following provisions:

(1) Do not sample PM downstream of the cooling.

(2) If cooling causes exhaust temperatures above 202 °C to decrease to below 180 °C, do not sample NMHC downstream of the cooling for compression-ignition engines, 2-stroke spark-ignition engines, and 4-stroke spark-ignition engines below 19 kW.

(3) If cooling causes aqueous condensation, do not sample NO_X downstream of the cooling unless the cooler meets the performance verification in § 1065.376.

(4) If cooling causes aqueous condensation before the flow reaches a flow meter, measure dewpoint, T_{dew} and pressure, p_{total} at the flow meter inlet. Use these values in emission calculations according to § 1065.650.

[70 FR 40516, July 13, 2005, as amended at 75 FR 23035, Apr. 30, 2010]

§ 1065.245 Sample flow meter for batch sampling.

(a) *Application*. Use a sample flow meter to determine sample flow rates or total flow sampled into a batch sampling system over a test interval. You may use the difference between a diluted exhaust sample flow meter and a dilution air meter to calculate raw exhaust flow rates or total raw exhaust flow over a test interval.

(b) *Component requirements*. We recommend that you use a sample flow meter that meets the specifications in Table 1 of § 1065.205. This may involve a laminar flow element, an ultrasonic flow meter, a subsonic venturi, a critical-flow venturi or multiple critical-flow venturis arranged in parallel, a positive-displacement meter, a thermal-mass meter, an averaging Pitot tube, or a hot-wire anemometer. Note that your overall system for measuring sample flow must meet the linearity verification in § 1065.307. For the special case where CFVs are used for both the diluted exhaust and sample-flow measurements and their upstream pressures and temperatures remain similar during testing, you do not have to quantify the flow rate of the sample-flow CFV. In this special case, the sample-flow CFV inherently flow-weights the batch sample relative to the diluted exhaust CFV.

(c) *Flow conditioning*. For any type of sample flow meter, condition the flow as needed to prevent wakes, eddies, circulating flows, or flow pulsations from affecting the accuracy or repeatability of the meter. For some meters, you may accomplish this by using a sufficient length of straight tubing (such as a length equal to at least 10 pipe diameters) or by using specially designed tubing bends, orifice plates or straightening fins to establish a predictable velocity profile upstream of the meter.

§ 1065.248 Gas divider.

(a) *Application*. You may use a gas divider to blend calibration gases.

(b) *Component requirements*. Use a gas divider that blends gases to the specifications of § 1065.750 and to the flow-weighted concentrations expected during testing. You may use critical-flow gas dividers, capillary-tube gas dividers, or thermal-mass-meter gas dividers. Note that your overall gas-divider system must meet the linearity verification in § 1065.307.

CO AND CO_2 MEASUREMENTS

§ 1065.250 Nondispersive infra-red analyzer.

(a) *Application.* Use a nondispersive infra-red (NDIR) analyzer to measure CO and CO_2 concentrations in raw or diluted exhaust for either batch or continuous sampling.

(b) *Component requirements.* We recommend that you use an NDIR analyzer that meets the specifications in Table 1 of § 1065.205. Note that your NDIR-based system must meet the calibration and verifications in § 1065.350 and § 1065.355 and it must also meet the linearity verification in § 1065.307. You may use an NDIR analyzer that has compensation algorithms that are functions of other gaseous measurements and the engine's known or assumed fuel properties. The target value for any compensation algorithm is 0.0% (that is, no bias high and no bias low), regardless of the uncompensated signal's bias.

HYDROCARBON MEASUREMENTS

§ 1065.260 Flame-ionization detector.

(a) *Application.* Use a flame-ionization detector (FID) analyzer to measure hydrocarbon concentrations in raw or diluted exhaust for either batch or continuous sampling. Determine hydrocarbon concentrations on a carbon number basis of one, C_1. Determine methane and nonmethane hydrocarbon values as described in paragraph (e) of this section. See subpart I of this part for special provisions that apply to measuring hydrocarbons when testing with oxygenated fuels.

(b) *Component requirements.* We recommend that you use a FID analyzer that meets the specifications in Table 1 of § 1065.205. Note that your FID-based system for measuring THC, THCE, or CH_4 must meet all of the verifications for hydrocarbon measurement in subpart D of this part, and it must also meet the linearity verification in § 1065.307. You may use a FID that has compensation algorithms that are functions of other gaseous measurements and the engine's known or assumed fuel properties. The target value for any compensation algorithm is 0.0% (that is, no bias high and no bias low), regardless of the uncompensated signal's bias.

(c) *Heated FID analyzers.* For compression-ignition engines, two-stroke spark-ignition engines, and four-stroke spark-ignition engines below 19 kW, you must use heated FID analyzers that maintain all surfaces that are exposed to emissions at a temperature of (191 ± 11) °C.

(d) *FID fuel and burner air.* Use FID fuel and burner air that meet the specifications of § 1065.750. Do not allow the FID fuel and burner air to mix before entering the FID analyzer to ensure that the FID analyzer operates with a diffusion flame and not a premixed flame.

(e) *Methane.* FID analyzers measure total hydrocarbons (THC). To determine nonmethane hydrocarbons (NMHC), quantify methane, CH_4, either with a nonmethane cutter and a FID analyzer as described in § 1065.265, or with a gas chromatograph as described in § 1065.267. Instead of measuring methane, you may assume that 2% of measured total hydrocarbon is methane, as described in § 1065.650(c)(1)(vi). For a FID analyzer used to determine NMHC, determine its response factor to methane, RF_{CH4}, as described in § 1065.360. Note that NMHC-related calculations are described in § 1065.660.

[70 FR 40516, July 13, 2005, as amended at 75 FR 23035, Apr. 30, 2010; 75 FR 68462, Nov. 8, 2010]

§ 1065.265 Nonmethane cutter.

(a) *Application.* You may use a nonmethane cutter to measure CH_4 with a FID analyzer. A nonmethane cutter oxidizes all nonmethane hydrocarbons to CO_2 and H_2O. You may use a nonmethane cutter for raw or diluted exhaust for batch or continuous sampling.

(b) *System performance.* Determine nonmethane-cutter performance as described in § 1065.365 and use the results to calculate NMHC emission in § 1065.660.

(c) *Configuration.* Configure the nonmethane cutter with a bypass line if it is needed for the verification described in § 1065.365.

(d) *Optimization.* You may optimize a nonmethane cutter to maximize the penetration of CH_4 and the oxidation of

all other hydrocarbons. You may humidify a sample and you may dilute a sample with purified air or oxygen (O_2) upstream of the nonmethane cutter to optimize its performance. You must account for any sample humidification and dilution in emission calculations.

[70 FR 40516, July 13, 2005, as amended at 73 FR 37300, June 30, 2008]

§ 1065.267 Gas chromatograph.

(a) *Application*. You may use a gas chromatograph to measure CH_4 concentrations of diluted exhaust for batch sampling. While you may also use a nonmethane cutter to measure CH_4, as described in § 1065.265, use a reference procedure based on a gas chromatograph for comparison with any proposed alternate measurement procedure under § 1065.10.

(b) *Component requirements*. We recommend that you use a gas chromatograph that meets the specifications in Table 1 of § 1065.205, and it must also meet the linearity verification in § 1065.307.

NO_X AND N_2O MEASUREMENTS

§ 1065.270 Chemiluminescent detector.

(a) *Application*. You may use a chemiluminescent detector (CLD) to measure NO_X concentration in raw or diluted exhaust for batch or continuous sampling. We generally accept a CLD for NO_X measurement, even though it measures only NO and NO_2, when coupled with an NO_2-to-NO converter, since conventional engines and aftertreatment systems do not emit significant amounts of NO_X species other than NO and NO_2. Measure other NO_X species if required by the standard-setting part. While you may also use other instruments to measure NO_X, as described in § 1065.272, use a reference procedure based on a chemiluminescent detector for comparison with any proposed alternate measurement procedure under § 1065.10.

(b) *Component requirements*. We recommend that you use a CLD that meets the specifications in Table 1 of § 1065.205. Note that your CLD-based system must meet the quench verification in § 1065.370 and it must also meet the linearity verification in § 1065.307. You may use a heated or unheated CLD, and you may use a CLD that operates at atmospheric pressure or under a vacuum. You may use a CLD that has compensation algorithms that are functions of other gaseous measurements and the engine's known or assumed fuel properties. The target value for any compensation algorithm is 0.0% (that is, no bias high and no bias low), regardless of the uncompensated signal's bias.

(c) *NO_2-to-NO converter*. Place upstream of the CLD an internal or external NO_2-to-NO converter that meets the verification in § 1065.378. Configure the converter with a bypass line if it is needed to facilitate this verification.

(d) *Humidity effects*. You must maintain all CLD temperatures to prevent aqueous condensation. If you remove humidity from a sample upstream of a CLD, use one of the following configurations:

(1) Connect a CLD downstream of any dryer or chiller that is downstream of an NO_2-to-NO converter that meets the verification in § 1065.378.

(2) Connect a CLD downstream of any dryer or thermal chiller that meets the verification in § 1065.376.

(e) *Response time*. You may use a heated CLD to improve CLD response time.

[70 FR 40516, July 13, 2005, as amended at 73 FR 37300, June 30, 2008]

§ 1065.272 Nondispersive ultraviolet analyzer.

(a) *Application*. You may use a nondispersive ultraviolet (NDUV) analyzer to measure NO_X concentration in raw or diluted exhaust for batch or continuous sampling. We generally accept an NDUV for NO_X measurement, even though it measures only NO and NO_2, since conventional engines and aftertreatment systems do not emit significant amounts of other NO_X species. Measure other NO_X species if required by the standard-setting part. Note that good engineering judgment may preclude you from using an NDUV analyzer if sampled exhaust from test engines contains oil (or other contaminants) in sufficiently high concentrations to interfere with proper operation.

(b) *Component requirements*. We recommend that you use an NDUV analyzer that meets the specifications in Table 1 of § 1065.205. Note that your NDUV-based system must meet the verifications in § 1065.372 and it must also meet the linearity verification in § 1065.307. You may use a NDUV analyzer that has compensation algorithms that are functions of other gaseous measurements and the engine's known or assumed fuel properties. The target value for any compensation algorithm is 0.0% (that is, no bias high and no bias low), regardless of the uncompensated signal's bias.

(c) *NO_2-to-NO converter*. If your NDUV analyzer measures only NO, place upstream of the NDUV analyzer an internal or external NO_2-to-NO converter that meets the verification in § 1065.378. Configure the converter with a bypass to facilitate this verification.

(d) *Humidity effects*. You must maintain NDUV temperature to prevent aqueous condensation, unless you use one of the following configurations:

(1) Connect an NDUV downstream of any dryer or chiller that is downstream of an NO_2-to-NO converter that meets the verification in § 1065.378.

(2) Connect an NDUV downstream of any dryer or thermal chiller that meets the verification in § 1065.376.

[70 FR 40516, July 13, 2005, as amended at 73 FR 59323, Oct. 8, 2008]

§ 1065.275 N_2O measurement devices.

(a) *General component requirements*. We recommend that you use an analyzer that meets the specifications in Table 1 of § 1065.205. Note that your system must meet the linearity verification in § 1065.307.

(b) *Instrument types*. You may use any of the following analyzers to measure N_2O:

(1) *Nondispersive infra-red (NDIR) analyzer*. You may use an NDIR analyzer that has compensation algorithms that are functions of other gaseous measurements and the engine's known or assumed fuel properties. The target value for any compensation algorithm is 0.0% (that is, no bias high and no bias low), regardless of the uncompensated signal's bias.

(2) *Fourier transform infra-red (FTIR) analyzer*. You may use an FTIR analyzer that has compensation algorithms that are functions of other gaseous measurements and the engine's known or assumed fuel properties. The target value for any compensation algorithm is 0.0% (that is, no bias high and no bias low), regardless of the uncompensated signal's bias. Use appropriate analytical procedures for interpretation of infrared spectra. For example, EPA Test Method 320 is considered a valid method for spectral interpretation (see *http://www.epa.gov/ttn/emc/methods/method320.html*).

(3) *Photoacoustic analyzer*. You may use a photoacoustic analyzer that has compensation algorithms that are functions of other gaseous measurements. The target value for any compensation algorithm is 0.0% (that is, no bias high and no bias low), regardless of the uncompensated signal's bias. Use an optical wheel configuration that gives analytical priority to measurement of the least stable components in the sample. Select a sample integration time of at least 5 seconds. Take into account sample chamber and sample line volumes when determining flush times for your instrument.

(4) *Gas chromatograph analyzer*. You may use a gas chromatograph with an electron-capture detector (GC–ECD) to measure N_2O concentrations of diluted exhaust for batch sampling.

(i) You may use a packed or porous layer open tubular (PLOT) column phase of suitable polarity and length to achieve adequate resolution of the N_2O peak for analysis. Examples of acceptable columns are a PLOT column consisting of bonded polystyrene-divinylbenzene or a Porapack Q packed column. Take the column temperature profile and carrier gas selection into consideration when setting up your method to achieve adequate N_2O peak resolution.

(ii) Use good engineering judgment to zero your instrument and correct for drift. You do not need to follow the specific procedures in § 1065.530 and § 1065.550(b) that would otherwise apply. For example, you may perform a span gas measurement before and after sample analysis without zeroing. Use the average area counts of the pre-span and post-span measurements to generate a response factor (area counts/span gas

concentration), which you then multiply by the area counts from your sample to generate the sample concentration.

(c) *Interference validation*. Perform interference validation for NDIR, FTIR, and photoacoustic analyzers using the procedures of § 1065.375. Interference validation is not required for GC–ECD. Certain interference gases can positively interfere with NDIR, FTIR, and photoacoustic analyzers by causing a response similar to N_2O. When running the interference verification for these analyzers, use interference gases as follows:

(1) The interference gases for NDIR analyzers are CO, CO_2, H_2O, CH_4 and SO_2. Note that interference species, with the exception of H_2O, are dependent on the N_2O infrared absorption band chosen by the instrument manufacturer and should be determined dently for each analyzer.

(2) Use good engineering judgment to determine interference gases for FTIR. Note that interference species, with the exception of H_2O, are dependent on the N_2O infrared absorption band chosen by the instrument manufacturer and should be determined independently for each analyzer.

(3) The interference gases for photoacoustic analyzers are CO, CO_2, and H_2O.

[74 FR 56512, Oct. 30, 2009]

O_2 MEASUREMENTS

§ 1065.280 Paramagnetic and magnetopneumatic O_2 detection analyzers.

(a) *Application*. You may use a paramagnetic detection (PMD) or magnetopneumatic detection (MPD) analyzer to measure O_2 concentration in raw or diluted exhaust for batch or continuous sampling. You may use O_2 measurements with intake air or fuel flow measurements to calculate exhaust flow rate according to § 1065.650.

(b) *Component requirements*. We recommend that you use a PMD or MPD analyzer that meets the specifications in Table 1 of § 1065.205. Note that it must meet the linearity verification in § 1065.307. You may use a PMD or MPD that has compensation algorithms that are functions of other gaseous measurements and the engine's known or assumed fuel properties. The target value for any compensation algorithm is 0.0% (that is, no bias high and no bias low), regardless of the uncompensated signal's bias.

[73 FR 37300, June 30, 2008]

AIR-TO-FUEL RATIO MEASUREMENTS

§ 1065.284 Zirconia (ZrO_2) analyzer.

(a) *Application*. You may use a zirconia (ZrO_2) analyzer to measure air-to-fuel ratio in raw exhaust for continuous sampling. You may use O_2 measurements with intake air or fuel flow measurements to calculate exhaust flow rate according to § 1065.650.

(b) *Component requirements*. We recommend that you use a ZrO_2 analyzer that meets the specifications in Table 1 of § 1065.205. Note that your ZrO_2-based system must meet the linearity verification in § 1065.307. You may use a Zirconia analyzer that has compensation algorithms that are functions of other gaseous measurements and the engine's known or assumed fuel properties. The target value for any compensation algorithm is 0.0% (that is, no bias high and no bias low), regardless of the uncompensated signal's bias.

PM MEASUREMENTS

§ 1065.290 PM gravimetric balance.

(a) *Application*. Use a balance to weigh net PM on a sample medium for laboratory testing.

(b) *Component requirements*. We recommend that you use a balance that meets the specifications in Table 1 of § 1065.205. Note that your balance-based system must meet the linearity verification in § 1065.307. If the balance uses internal calibration weights for routine spanning and the weights do not meet the specifications in § 1065.790, the weights must be verified independently with external calibration weights meeting the requirements of § 1065.790. While you may also use an inertial balance to measure PM, as described in § 1065.295, use a reference procedure based on a gravimetric balance for comparison with any proposed alternate measurement procedure under § 1065.10.

(c) *Pan design*. We recommend that you use a balance pan designed to minimize corner loading of the balance, as follows:

(1) Use a pan that centers the PM sample media (such as a filter) on the weighing pan. For example, use a pan in the shape of a cross that has upswept tips that center the PM sample media on the pan.

(2) Use a pan that positions the PM sample as low as possible.

(d) *Balance configuration*. Configure the balance for optimum settling time and stability at your location.

[73 FR 37300, June 30, 2008, as amended at 75 FR 68462, Nov. 8, 2010]

§ 1065.295 PM inertial balance for field-testing analysis.

(a) *Application*. You may use an inertial balance to quantify net PM on a sample medium for field testing.

(b) *Component requirements*. We recommend that you use a balance that meets the specifications in Table 1 of § 1065.205. Note that your balance-based system must meet the linearity verification in § 1065.307. If the balance uses an internal calibration process for routine spanning and linearity verifications, the process must be NIST-traceable. You may use an inertial PM balance that has compensation algorithms that are functions of other gaseous measurements and the engine's known or assumed fuel properties. The target value for any compensation algorithm is 0.0% (that is, no bias high and no bias low), regardless of the uncompensated signal's bias.

(c) *Loss correction*. You may use PM loss corrections to account for PM loss in the inertial balance, including the sample handling system.

(d) *Deposition*. You may use electrostatic deposition to collect PM as long as its collection efficiency is at least 95%.

[73 FR 59259, Oct. 8, 2008, as amended at 75 FR 68462, Nov. 8, 2010]

Subpart D—Calibrations and Verifications

§ 1065.301 Overview and general provisions.

(a) This subpart describes required and recommended calibrations and verifications of measurement systems. See subpart C of this part for specifications that apply to individual instruments.

(b) You must generally use complete measurement systems when performing calibrations or verifications in this subpart. For example, this would generally involve evaluating instruments based on values recorded with the complete system you use for recording test data, including analog-to-digital converters. For some calibrations and verifications, we may specify that you disconnect part of the measurement system to introduce a simulated signal.

(c) If we do not specify a calibration or verification for a portion of a measurement system, calibrate that portion of your system and verify its performance at a frequency consistent with any recommendations from the measurement-system manufacturer, consistent with good engineering judgment.

(d) Use NIST-traceable standards to the tolerances we specify for calibrations and verifications. Where we specify the need to use NIST-traceable standards, you may alternatively ask for our approval to use international standards that are not NIST-traceable.

§ 1065.303 Summary of required calibration and verifications

The following table summarizes the required and recommended calibrations and verifications described in this subpart and indicates when these have to be performed:

TABLE 1 OF § 1065.303—SUMMARY OF REQUIRED CALIBRATION AND VERIFICATIONS

Type of calibration or verification	Minimum frequency [a]
§ 1065.305: Accuracy, repeatability and noise	Accuracy: Not required, but recommended for initial installation. Repeatability: Not required, but recommended for initial installation. Noise: Not required, but recommended for initial installation.

TABLE 1 OF § 1065.303—SUMMARY OF REQUIRED CALIBRATION AND VERIFICATIONS—Continued

Type of calibration or verification	Minimum frequency [a]
§ 1065.307: Linearity verification	Speed: Upon initial installation, within 370 days before testing and after major maintenance. Torque: Upon initial installation, within 370 days before testing and after major maintenance. Electrical power: Upon initial installation, within 370 days before testing and after major maintenance. Fuel flow: Upon initial installation, within 370 days before testing, and after major maintenance. Clean gas and diluted exhaust flows: Upon initial installation, within 370 days before testing and after major maintenance, unless flow is verified by propane check or by carbon or oxygen balance. Raw exhaust flow: Upon initial installation, within 185 days before testing and after major maintenance, unless flow is verified by propane check or by carbon or oxygen balance. Gas dividers: Upon initial installation, within 370 days before testing, and after major maintenance. Gas analyzers: Upon initial installation, within 35 days before testing and after major maintenance. FTIR and photoacoustic analyzers: Upon initial installation, within 370 days before testing and after major maintenance. GC–ECD: Upon initial installation and after major maintenance. PM balance: Upon initial installation, within 370 days before testing and after major maintenance. Pressure, temperature, and dewpoint: Upon initial installation, within 370 days before testing and after major maintenance.
§ 1065.308: Continuous gas analyzer system response and updating-recording verification—for gas analyzers not continuously compensated for other gas species.	Upon initial installation or after system modification that would affect response.
§ 1065.309: Continuous gas analyzer system-response and updating-recording verification—for gas analyzers continuously compensated for other gas species.	Upon initial installation or after system modification that would affect response.
§ 1065.310: Torque	Upon initial installation and after major maintenance.
§ 1065.315: Pressure, temperature, dewpoint	Upon initial installation and after major maintenance.
§ 1065.320: Fuel flow	Upon initial installation and after major maintenance.
§ 1065.325: Intake flow	Upon initial installation and after major maintenance.
§ 1065.330: Exhaust flow	Upon initial installation and after major maintenance.
§ 1065.340: Diluted exhaust flow (CVS)	Upon initial installation and after major maintenance.
§ 1065.341: CVS and batch sampler verification [b]	Upon initial installation, within 35 days before testing, and after major maintenance.
§ 1065.342 Sample dryer verification	For thermal chillers: Upon installation and after major maintenance. For osmotic membranes; upon installation, within 35 days of testing, and after major maintenance.
§ 1065.345: Vacuum leak	For laboratory testing: Upon initial installation of the sampling system, within 8 hours before the start of the first test interval of each duty-cycle sequence, and after maintenance such as pre-filter changes. For field testing: After each installation of the sampling system on the vehicle, prior to the start of the field test, and after maintenance such as pre-filter changes.
§ 1065.350: CO_2 NDIR H_2O interference	Upon initial installation and after major maintenance.
§ 1065.355: CO NDIR CO_2 and H_2O interference	Upon initial installation and after major maintenance.
§ 1065.360: FID calibration	Calibrate all FID analyzers: Upon initial installation and after major maintenance.
THC FID optimization, and THC FID verification	Optimize and determine CH_4 response for THC FID analyzers: Upon initial installation and after major maintenance. Verify CH_4 response for THC FID analyzers: Upon initial installation, within 185 days before testing, and after major maintenance.
§ 1065.362: Raw exhaust FID O_2 interference	For all FID analyzers: Upon initial installation, and after major maintenance. For THC FID analyzers: Upon initial installation, after major maintenance, and after FID optimization according to § 1065.360.
§ 1065.365: Nonmethane cutter penetration	Upon initial installation, within 185 days before testing, and after major maintenance.
§ 1065.370: CLD CO_2 and H_2O quench	Upon initial installation and after major maintenance.
§ 1065.372: NDUV HC and H_2O interference	Upon initial installation and after major maintenance.
§ 1065.375: N_2O analyzer interference	Upon initial installation and after major maintenance.
§ 1065.376: Chiller NO_2 penetration	Upon initial installation and after major maintenance.

TABLE 1 OF § 1065.303—SUMMARY OF REQUIRED CALIBRATION AND VERIFICATIONS—Continued

Type of calibration or verification	Minimum frequency [a]
§ 1065.378: NO_2-to-NO converter conversion	Upon initial installation, within 35 days before testing, and after major maintenance.
§ 1065.390: PM balance and weighing	Independent verification: Upon initial installation, within 370 days before testing, and after major maintenance. Zero, span, and reference sample verifications: Within 12 hours of weighing, and after major maintenance.
§ 1065.395: Inertial PM balance and weighing	Independent verification: Upon initial installation, within 370 days before testing, and after major maintenance. Other verifications: Upon initial installation and after major maintenance.

[a] Perform calibrations and verifications more frequently, according to measurement system manufacturer instructions and good engineering judgment.
[b] The CVS verification described in § 1065.341 is not required for systems that agree within ±2% based on a chemical balance of carbon or oxygen of the intake air, fuel, and diluted exhaust.

[75 FR 23035, Apr. 30, 2010]

§ 1065.305 Verifications for accuracy, repeatability, and noise.

(a) This section describes how to determine the accuracy, repeatability, and noise of an instrument. Table 1 of § 1065.205 specifies recommended values for individual instruments.

(b) We do not require you to verify instrument accuracy, repeatability, or noise.

However, it may be useful to consider these verifications to define a specification for a new instrument, to verify the performance of a new instrument upon delivery, or to troubleshoot an existing instrument.

(c) In this section we use the letter "y" to denote a generic measured quantity, the superscript over-bar to denote an arithmetic mean (such as $\bar{y}$), and the subscript "$_{ref}$" to denote the reference quantity being measured.

(d) Conduct these verifications as follows:

(1) Prepare an instrument so it operates at its specified temperatures, pressures, and flows. Perform any instrument linearization or calibration procedures prescribed by the instrument manufacturer.

(2) Zero the instrument as you would before an emission test by introducing a zero signal. Depending on the instrument, this may be a zero-concentration gas, a reference signal, a set of reference thermodynamic conditions, or some combination of these. For gas analyzers, use a zero gas that meets the specifications of § 1065.750.

(3) Span the instrument as you would before an emission test by introducing a span signal. Depending on the instrument, this may be a span-concentration gas, a reference signal, a set of reference thermodynamic conditions, or some combination of these. For gas analyzers, use a span gas that meets the specifications of § 1065.750.

(4) Use the instrument to quantify a NIST-traceable reference quantity, $y_{\mathrm{ref.}}$ For gas analyzers the reference gas must meet the specifications of § 1065.750. Select a reference quantity near the mean value expected during testing. For all gas analyzers, use a quantity near the flow-weighted mean concentration expected at the standard or expected during testing, whichever is greater. For noise verification, use the same zero gas from paragraph (d)(2) of this section as the reference quantity. In all cases, allow time for the instrument to stabilize while it measures the reference quantity. Stabilization time may include time to purge an instrument and time to account for its response.

(5) Sample and record values for 30 seconds (you may select a longer sampling period if the recording update frequency is less than 0.5 Hz), record the arithmetic mean, $\bar{y}_{\mathrm{i}}$ and record the standard deviation, σ_{i} of the recorded values. Refer to § 1065.602 for an example of calculating arithmetic mean and standard deviation.

(6) Also, if the reference quantity is not absolutely constant, which might be the case with a reference flow, sample and record values of y_{refi} for 30 seconds and record the arithmetic mean of the values, $\bar{y}_{ref}$. Refer to § 1065.602 for an example of calculating arithmetic mean.

(7) Subtract the reference value, y_{ref} (or $\bar{y}_{refi}$), from the arithmetic mean, $\bar{y}_i$. Record this value as the error, ε_i.

(8) Repeat the steps specified in paragraphs (d)(2) through (7) of this section until you have ten arithmetic means ($\bar{y}_1$, $\bar{y}_2$, $\bar{y}_i$, ...$\bar{y}_{10}$), ten standard deviations, (σ_1, σ_2, σ_i,...σ_{10}), and ten errors (ε_1, ε_2, ε_i,...ε_{10}).

(9) Use the following values to quantify your measurements:

(i) *Accuracy*. Instrument accuracy is the absolute difference between the reference quantity, y_{ref} (or $\bar{y}_{ref}$), and the arithmetic mean of the ten $\bar{y}_i$, $\bar{y}$ values. Refer to the example of an accuracy calculation in § 1065.602. We recommend that instrument accuracy be within the specifications in Table 1 of § 1065.205.

(ii) *Repeatability*. Repeatability is two times the standard deviation of the ten errors (that is, repeatability = $2 \cdot \sigma_\varepsilon$). Refer to the example of a standard-deviation calculation in § 1065.602. We recommend that instrument repeatability be within the specifications in Table 1 of § 1065.205.

(iii) *Noise*. Noise is two times the root-mean-square of the ten standard deviations (that is, noise = $2 \cdot rms_\sigma$) when the reference signal is a zero-quantity signal. Refer to the example of a root-mean-square calculation in § 1065.602. We recommend that instrument noise be within the specifications in Table 1 of § 1065.205.

(10) You may use a measurement instrument that does not meet the accuracy, repeatability, or noise specifications in Table 1 of § 1065.205, as long as you meet the following criteria:

(i) Your measurement systems meet all the other required calibration, verification, and validation specifications in subparts D, F, and J of this part, as applicable.

(ii) The measurement deficiency does not adversely affect your ability to demonstrate compliance with the applicable standards.

[70 FR 40516, July 13, 2005, as amended at 73 FR 37301, June 30, 2008; 75 FR 23037, Apr. 30, 2010]

§ 1065.307 Linearity verification.

(a) *Scope and frequency*. Perform a linearity verification on each measurement system listed in Table 1 of this section at least as frequently as indicated in the table, consistent with measurement system manufacturer recommendations and good engineering judgment. Note that this linearity verification may replace requirements we previously referred to as ''calibrations''. The intent of a linearity verification is to determine that a measurement system responds proportionally over the measurement range of interest. A linearity verification generally consists of introducing a series of at least 10 reference values to a measurement system. The measurement system quantifies each reference value. The measured values are then collectively compared to the reference values by using a least squares linear regression and the linearity criteria specified in Table 1 of this section.

(b) *Performance requirements*. If a measurement system does not meet the applicable linearity criteria in Table 1 of this section, correct the deficiency by re-calibrating, servicing, or replacing components as needed. Repeat the linearity verification after correcting the deficiency to ensure that the measurement system meets the linearity criteria. Before you may use a measurement system that does not meet linearity criteria, you must demonstrate to us that the deficiency does not adversely affect your ability to demonstrate compliance with the applicable standards.

(c) *Procedure*. Use the following linearity verification protocol, or use good engineering judgment to develop a different protocol that satisfies the intent of this section, as described in paragraph (a) of this section:

(1) In this paragraph (c), we use the letter ''y'' to denote a generic measured quantity, the superscript over-bar to denote an arithmetic mean (such as $\bar{y}$), and the subscript ''$_{ref}$'' to denote the known or reference quantity being measured.

(2) Operate a measurement system at its specified temperatures, pressures, and flows. This may include any specified adjustment or periodic calibration of the measurement system.

(3) Zero the instrument as you would before an emission test by introducing a zero signal. Depending on the instrument, this may be a zero-concentration

gas, a reference signal, a set of reference thermodynamic conditions, or some combination of these. For gas analyzers, use a zero gas that meets the specifications of §1065.750 and introduce it directly at the analyzer port.

(4) Span the instrument as you would before an emission test by introducing a span signal. Depending on the instrument, this may be a span-concentration gas, a reference signal, a set of reference thermodynamic conditions, or some combination of these. For gas analyzers, use a span gas that meets the specifications of §1065.750 and introduce it directly at the analyzer port.

(5) After spanning the instrument, check zero with the same signal you used in paragraph (c)(3) of this section. Based on the zero reading, use good engineering judgment to determine whether or not to rezero and or re-span the instrument before proceeding to the next step.

(6) For all measured quantities, use instrument manufacturer recommendations and good engineering judgment to select reference values, $y_{refi,}$ that cover a range of values that you expect would prevent extrapolation beyond these values during emission testing. We recommend selecting a zero reference signal as one of the reference values of the linearity verification. For pressure, temperature, dewpoint, and GC–ECD linearity verifications, we recommend at least three reference values. For all other linearity verifications select at least ten reference values.

(7) Use instrument manufacturer recommendations and good engineering judgment to select the order in which you will introduce the series of reference values. For example you may select the reference values randomly to avoid correlation with previous measurements, you may select reference values in ascending or descending order to avoid long settling times of reference signals, or as another example you may select values to ascend and then descend which might incorporate the effects of any instrument hysteresis into the linearity verification.

(8) Generate reference quantities as described in paragraph (d) of this section. For gas analyzers, use gas concentrations known to be within the specifications of §1065.750 and introduce them directly at the analyzer port.

(9) Introduce a reference signal to the measurement instrument.

(10) Allow time for the instrument to stabilize while it measures the reference value. Stabilization time may include time to purge an instrument and time to account for its response.

(11) At a recording frequency of at least f Hz, specified in Table 1 of §1065.205, measure the reference value for 30 seconds (you may select a longer sampling period if the recording update frequency is less than 0.5 Hz) and record the arithmetic mean of the recorded values, $\bar{y}_i$. Refer to §1065.602 for an example of calculating an arithmetic mean.

(12) Repeat steps in paragraphs (c)(9) through (11) of this section until all reference quantities are measured.

(13) Use the arithmetic means, $\bar{y}_i$, and reference values, $\bar{y}_{refi}$, to calculate least-squares linear regression parameters and statistical values to compare to the minimum performance criteria specified in Table 1 of this section. Use the calculations described in §1065.602. Using good engineering judgment, you may weight the results of individual data pairs (i.e., (y_{refi}, $\bar{y}_i$)), in the linear regression calculations.

(d) *Reference signals*. This paragraph (d) describes recommended methods for generating reference values for the linearity-verification protocol in paragraph (c) of this section. Use reference values that simulate actual values, or introduce an actual value and measure it with a reference-measurement system. In the latter case, the reference value is the value reported by the reference-measurement system. Reference values and reference-measurement systems must be NIST-traceable. We recommend using calibration reference quantities that are NIST-traceable within 0.5% uncertainty, if not specified otherwise in other sections of this part 1065. Use the following recommended methods to generate reference values or use good engineering

judgment to select a different reference:

(1) *Speed*. Run the engine or dynamometer at a series of steady-state speeds and use a strobe, a photo tachometer, or a laser tachometer to record reference speeds.

(2) *Torque*. Use a series of calibration weights and a calibration lever arm to simulate engine torque. You may instead use the engine or dynamometer itself to generate a nominal torque that is measured by a reference load cell or proving ring in series with the torque-measurement system. In this case use the reference load cell measurement as the reference value. Refer to §1065.310 for a torque-calibration procedure similar to the linearity verification in this section.

(3) *Electrical power*. Use a controlled source of current and a watt-hour standard reference meter. Complete calibration systems that contain a current source and a reference watt-hour meter are commonly used in the electrical power distribution industry and are therefore commercially available.

(4) *Fuel rate*. Operate the engine at a series of constant fuel-flow rates or recirculate fuel back to a tank through the fuel flow meter at different flow rates. Use a gravimetric reference measurement (such as a scale, balance, or mass comparator) at the inlet to the fuel-measurement system. Use a stopwatch or timer to measure the time intervals over which reference masses of fuel are introduced to the fuel measurement system. The reference fuel mass divided by the time interval is the reference fuel flow rate.

(5) *Flow rates—inlet air, dilution air, diluted exhaust, raw exhaust, or sample flow*. Use a reference flow meter with a blower or pump to simulate flow rates. Use a restrictor, diverter valve, a variable-speed blower or a variable-speed pump to control the range of flow rates. Use the reference meter's response as the reference values.

(i) *Reference flow meters*. Because the flow range requirements for these various flows are large, we allow a variety of reference meters. For example, for diluted exhaust flow for a full-flow dilution system, we recommend a reference subsonic venturi flow meter with a restrictor valve and a blower to simulate flow rates. For inlet air, dilution air, diluted exhaust for partial-flow dilution, raw exhaust, or sample flow, we allow reference meters such as critical flow orifices, critical flow venturis, laminar flow elements, master mass flow standards, or Roots meters. Make sure the reference meter is calibrated by the flow-meter manufacturer and its calibration is NIST-traceable. If you use the difference of two flow measurements to determine a net flow rate, you may use one of the measurements as a reference for the other.

(ii) *Reference flow values*. Because the reference flow is not absolutely constant, sample and record values of $\dot{n}_{refi}$ for 30 seconds and use the arithmetic mean of the values, $\bar{\dot{n}}_{ref}$, as the reference value. Refer to §1065.602 for an example of calculating arithmetic mean.

(6) *Gas division*. Use one of the two reference signals:

(i) At the outlet of the gas-division system, connect a gas analyzer that meets the linearity verification described in this section and has not been linearized with the gas divider being verified. For example, verify the linearity of an analyzer using a series of reference analytical gases directly from compressed gas cylinders that meet the specifications of §1065.750. We recommend using a FID analyzer or a PMD or MPD O_2 analyzer because of their inherent linearity. Operate this analyzer consistent with how you would operate it during an emission test. Connect a span gas to the gas-divider inlet. Use the gas-division system to divide the span gas with purified air or nitrogen. Select gas divisions that you typically use. Use a selected gas division as the measured value. Use the analyzer response divided by the span gas concentration as the reference gas-division value. Because the instrument response is not absolutely constant, sample and record values of x_{refi} for 30 seconds and use the arithmetic mean of the values, $\bar{x}_{ref}$, as the reference value. Refer to §1065.602 for an example of calculating arithmetic mean.

(ii) Using good engineering judgment and gas divider manufacturer recommendations, use one or more reference flow meters to measure the flow

rates of the gas divider and verify the gas-division value.

(7) *Continuous constituent concentration*. For reference values, use a series of gas cylinders of known gas concentration or use a gas-division system that is known to be linear with a span gas. Gas cylinders, gas-division systems, and span gases that you use for reference values must meet the specifications of § 1065.750.

(8) *Temperature*. You may perform the linearity verification for temperature measurement systems with thermocouples, RTDs, and thermistors by removing the sensor from the system and using a simulator in its place. Use a NIST-traceable simulator that is independently calibrated and, as appropriate, cold-junction compensated. The simulator uncertainty scaled to temperature must be less than 0.5% of $T_{max.}$ If you use this option, you must use sensors that the supplier states are accurate to better than 0.5% of T_{max} compared with their standard calibration curve.

(9) *Mass*. For linearity verification for gravimetric PM balances, use external calibration weights that that meet the requirements in § 1065.790.

(e) *Measurement systems that require linearity verification*. Table 1 of this section indicates measurement systems that require linearity verifications, subject to the following provisions:

(1) Perform a linearity verification more frequently based on the instrument manufacturer's recommendation or good engineering judgment.

(2) The expression ''x_{min}'' refers to the reference value used during the linearity verification that is closest to zero. This is the value used to calculate the first tolerance in Table 1 of this section using the intercept, $a_{0.}$ Note that this value may be zero, positive, or negative depending on the reference values. For example, if the reference values chosen to validate a pressure transducer vary from −10 to −1 kPa, x_{min} is −1 kPa. If the reference values used to validate a temperature device vary from 290 to 390 K, x_{min} is 290 K.

(3) The expression ''max'' generally refers to the absolute value of the reference value used during the linearity verification that is furthest from zero. This is the value used to scale the first and third tolerances in Table 1 of this section using a_0 and *SEE*. For example, if the reference values chosen to validate a pressure transducer vary from −10 to −1 kPa, then p_{max} is +10 kPa. If the reference values used to validate a temperature device vary from 290 to 390 K, then T_{max} is 390 K. For gas dividers where ''max'' is expressed as, x_{max}/x_{span}; x_{max} is the maximum gas concentration used during the verification, x_{span} is the undivided, undiluted, span gas concentration, and the resulting ratio is the maximum divider point reference value used during the verification (typically 1). The following are special cases where ''max'' refers to a different value:

(i) For linearity verification with a PM balance, m_{max} refers to the typical mass of a PM filter.

(ii) For linearity verification of torque on the engine's primary output shaft, T_{max} refers to the manufacturer's specified engine torque peak value of the lowest torque engine to be tested.

(4) The specified ranges are inclusive. For example, a specified range of 0.98–1.02 for a_1 means $0.98 \leq a_1 \leq 1.02$.

(5) These linearity verifications are optional for systems that pass the flow-rate verification for diluted exhaust as described in § 1065.341 (the propane check) or for systems that agree within ±2% based on a chemical balance of carbon or oxygen of the intake air, fuel, and exhaust.

(6) You must meet the a_1 criteria for these quantities only if the absolute value of the quantity is required, as opposed to a signal that is only linearly proportional to the actual value.

(7) Linearity checks are required for the following temperature measurements:

(i) The following temperature measurements always require linearity checks:

(A) Air intake.

(B) Aftertreatment bed(s), for engines tested with aftertreatment devices subject to cold-start testing.

(C) Dilution air for PM sampling, including CVS, double-dilution, and partial-flow systems.

(D) PM sample, if applicable.

(E) Chiller sample, for gaseous sampling systems that use thermal chillers

to dry samples and use chiller temperature to calculate the dewpoint at the outlet of the chiller. For your testing, if you choose to use a high alarm temperature setpoint for the chiller temperature as a constant value in the amount of water calculations in §1065.645, you may use good engineering judgment to verify the accuracy of the high alarm temperature setpoint in lieu of the linearity verification on the chiller temperature. We recommend that you input a reference simulated temperature signal below the alarm trip point, increase this signal until the high alarm trips, and verify that the alarm trip point value is no less than 2.0 °C below the reference value at the trip point.

(ii) Linearity checks are required for the following temperature measurements if these temperature measurements are specified by the engine manufacturer:

(A) Fuel inlet.

(B) Air outlet to the test cell's charge air cooler air outlet, for engines tested with a laboratory heat exchanger that simulates an installed charge air cooler.

(C) Coolant inlet to the test cell's charge air cooler, for engines tested with a laboratory heat exchanger that simulates an installed charge air cooler.

(D) Oil in the sump/pan.

(E) Coolant before the thermostat, for liquid-cooled engines.

(8) Linearity checks are required for the following pressure measurements:

(i) The following pressure measurements always require linearity checks:

(A) Air intake restriction.

(B) Exhaust back pressure.

(C) Barometer.

(D) CVS inlet gage pressure.

(E) Sample dryer, for gaseous sampling systems that use either osmotic-membrane or thermal chillers to dry samples. For your testing, if you choose to use a low alarm pressure setpoint for the sample dryer pressure as a constant value in the amount of water calculations in §1065.645, you may use good engineering judgment to verify the accuracy of the low alarm pressure setpoint in lieu of the linearity verification on the sample dryer pressure. We recommend that you input a reference pressure signal above the alarm trip point, decrease this signal until the low alarm trips, and verify that the trip point value is no more than 4.0 kPa above the reference value at the trip point.

(ii) Linearity checks are required for the following pressure measurements if these pressure measurements are specified by the engine manufacturer:

(A) The test cell's charge air cooler and interconnecting pipe pressure drop, for turbo-charged engines tested with a laboratory heat exchanger that simulates an installed charge air cooler.

(B) Fuel outlet.

TABLE 1 OF §1065.307—MEASUREMENT SYSTEMS THAT REQUIRE LINEARITY VERIFICATIONS—CONTINUED

Measurement system	Quantity	Minimum verification frequency	Linearity criteria			
			$\lvert x_{min}(a_1 - 1) + a_0 \rvert$	a_1	*SEE*	r^2
Speed	f_n	Within 370 days before testing.	$\leq 0.05\% \cdot f_{nmax}$	0.98–1.02	$\leq 2\% \cdot f_{nmax}$	≥0.990
Torque	T	Within 370 days before testing.	$\leq 1\% \cdot T_{max}$	0.98–1.02	$\leq 2\% \cdot T_{max}$	≥0.990
Electrical power	P	Within 370 days before testing.	$\leq 1\% \cdot P_{max}$	0.98–1.02	$\leq 2\% \cdot P_{max}$	≥0.990
Fuel flow rate	$\dot{m}$	Within 370 days before testing.	$\leq 1\% \cdot \dot{m}_{max}$	0.98–1.02	$\leq 2\% \cdot \dot{m}_{max}$	>0.990
Intake-air flow rate.	$\dot{n}$	Within 370 days before testing.	$\leq 1\% \cdot \dot{n}_{max}$	0.98–1.02	$\leq 2\% \cdot \dot{n}_{max}$	≥0.990
Dilution air flow rate.	$\dot{n}$	Within 370 days before testing.	$\leq 1\% \cdot \dot{n}_{max}$	0.98–1.02	$\leq 2\% \cdot \dot{n}_{max}$	≥0.990

TABLE 1 OF § 1065.307—MEASUREMENT SYSTEMS THAT REQUIRE LINEARITY VERIFICATIONS—CONTINUED—Continued

Measurement system	Quantity	Minimum verification frequency	Linearity criteria			
			$\lvert x_{min}(a_1 - 1) + a_0 \rvert$	a_1	*SEE*	r^2
Diluted exhaust flow rate.	$\dot{n}$	Within 370 days before testing.	$\leq 1\% \cdot \dot{n}_{max}$	0.98–1.02	$\leq 2\% \cdot \dot{n}_{max}$	≥ 0.990
Raw exhaust flow rate.	$\dot{n}$	Within 185 days before testing.	$\leq 1\% \cdot \dot{n}_{max}$	0.98–1.02	$\leq 2\% \cdot \dot{n}_{max}$	≥ 0.990
Batch sampler flow rates.	$\dot{n}$	Within 370 days before testing.	$\leq 1\% \cdot \dot{n}_{max}$	0.98–1.02	$\leq 2\% \cdot \dot{n}_{max}$	≥ 0.990
Gas dividers	x/x_{span}	Within 370 days before testing.	$\leq 0.5\% \cdot x_{max}/x_{span}$	0.98–1.02	$\leq 2\% \cdot x_{max}/x_{span}$	>0.990
Gas analyzers for laboratory testing.	x	Within 35 days before testing.	$\leq 0.5\% \cdot x_{max}$	0.99–1.01	$\leq 1\% \cdot x_{max}$	≥ 0.998
Gas analyzers for field testing.	x	Within 35 days before testing.	$\leq 1\% \cdot x_{max}$	0.99–1.01	$\leq 1\% \cdot x_{max}$	≥ 0.998
PM balance	m	Within 370 days before testing.	$\leq 1\% \cdot m_{max}$	0.99–1.01	$\leq 1\% \cdot m_{max}$	≥ 0.998
Pressures	p	Within 370 days before testing.	$\leq 1\% \cdot p_{max}$	0.99–1.01	$\leq 1\% \cdot p_{max}$	≥ 0.998
Dewpoint for intake air, PM-stabilization and balance environments.	T_{dew}	Within 370 days before testing.	$\leq 0.5\% \cdot T_{dewmax}$	0.99–1.01	$\leq 0.5\% \cdot T_{dewmax}$	≥ 0.998
Other dewpoint measurements.	T_{dew}	Within 370 days before testing.	$\leq 1\% \cdot T_{dewmax}$	0.99–1.01	$\leq 1\% \cdot T_{dewmax}$	≥ 0.998
Analog-to-digital conversion of temperature signals.	T	Within 370 days before testing.	$\leq 1\% \cdot T_{max}$	0.99–1.01	$\leq 1\% \cdot T_{max}$	≥ 0.998

[70 FR 40516, July 13, 2005, as amended at 73 FR 37302, June 30, 2008; 73 FR 59325, Oct. 8, 2008; 74 FR 56513, Oct. 30, 2009; 75 FR 23037, Apr. 30, 2010; 75 FR 68462, Nov. 8, 2010]

§ 1065.308 Continuous gas analyzer system-response and updating-recording verification—for gas analyzers not continuously compensated for other gas species.

(a) *Scope and frequency*. This section describes a verification procedure for system response and updating-recording frequency for continuous gas analyzers that output a gas species mole fraction (i.e., concentration) using a single gas detector, i.e., gas analyzers not continuously compensated for other gas species measured with multiple gas detectors. See § 1065.309 for verification procedures that apply to continuous gas analyzers that are continuously compensated for other gas species measured with multiple gas detectors. Perform this verification to determine the system response of the continuous gas analyzer and its sampling system. This verification is required for continuous gas analyzers used for transient or ramped-modal testing. You need not perform this verification for batch gas analyzer systems or for continuous gas analyzer systems that are used only for discrete-mode testing. Perform this verification after initial installation (i.e., test cell commissioning) and after any modifications to the system that would change system response. For example, perform this verification if you add a significant volume to the transfer lines by increasing their length or adding a filter; or if you reduce the frequency at

which the gas analyzer updates its output or the frequency at which you sample and record gas-analyzer concentrations.

(b) *Measurement principles.* This test verifies that the updating and recording frequencies match the overall system response to a rapid change in the value of concentrations at the sample probe. Gas analyzers and their sampling systems must be optimized such that their overall response to a rapid change in concentration is updated and recorded at an appropriate frequency to prevent loss of information. This test also verifies that the measurement system meets a minimum response time. You may use the results of this test to determine transformation time, t_{50}, for the purposes of time alignment of continuous data in accordance with §1065.650(c)(2)(i). You may also use an alternate procedure to determine t_{50} in accordance with good engineering judgment. Note that any such procedure for determining t_{50} must account for both transport delay and analyzer response time.

(c) *System requirements.* Demonstrate that each continuous analyzer has adequate update and recording frequencies and has a minimum rise time and a minimum fall time during a rapid change in gas concentration. You must meet one of the following criteria:

(1) The product of the mean rise time, t_{10-90}, and the frequency at which the system records an updated concentration must be at least 5, and the product of the mean fall time, t_{90-10}, and the frequency at which the system records an updated concentration must be at least 5. If the recording frequency is different than the analyzer's output update frequency, you must use the lower of these two frequencies for this verification, which is referred to as the updating-recording frequency. This verification applies to the nominal updating and recording frequencies. This criterion makes no assumption regarding the frequency content of changes in emission concentrations during emission testing; therefore, it is valid for any testing. Also, the mean rise time must be at or below 10 seconds and the mean fall time must be at or below 10 seconds.

(2) The frequency at which the system records an updated concentration must be at least 5 Hz. This criterion assumes that the frequency content of significant changes in emission concentrations during emission testing do not exceed 1 Hz. Also, the mean rise time must be at or below 10 seconds and the mean fall time must be at or below 10 seconds.

(3) You may use other criteria if we approve the criteria in advance.

(4) You may meet the overall PEMS verification in §1065.920 instead of the verification in this section for field testing with PEMS.

(d) *Procedure.* Use the following procedure to verify the response of each continuous gas analyzer:

(1) *Instrument setup.* Follow the analyzer manufacturer's start-up and operating instructions. Adjust the measurement system as needed to optimize performance. Run this verification with the analyzer operating in the same manner you will use for emission testing. If the analyzer shares its sampling system with other analyzers, and if gas flow to the other analyzers will affect the system response time, then start up and operate the other analyzers while running this verification test. You may run this verification test on multiple analyzers sharing the same sampling system at the same time. If you use any analog or real-time digital filters during emission testing, you must operate those filters in the same manner during this verification.

(2) *Equipment setup.* We recommend using minimal lengths of gas transfer lines between all connections and fast-acting three-way valves (2 inlets, 1 outlet) to control the flow of zero and blended span gases to the sample system's probe inlet or a tee near the outlet of the probe. Normally the gas flow rate is higher than the probe sample flow rate and the excess is overflowed out the inlet of the probe. If the gas flow rate is lower than the probe flow rate, the gas concentrations must be adjusted to account for the dilution from ambient air drawn into the probe. Select span gases for the species being measured. You may use binary or multi-gas span gases. You may use a gas blending or mixing device to blend span gases. A gas blending or mixing

device is recommended when blending span gases diluted in N_2 with span gases diluted in air. You may use a multi-gas span gas, such as NO-CO-CO_2-C_3H_8-CH_4, to verify multiple analyzers at the same time. If you use standard binary span gases, you must run separate response tests for each analyzer. In designing your experimental setup, avoid pressure pulsations due to stopping the flow through the gas-blending device.

(3) *Data collection.* (i) Start the flow of zero gas.

(ii) Allow for stabilization, accounting for transport delays and the slowest analyzer's full response.

(iii) Start recording data. For this verification you must record data at a frequency greater than or equal to that of the updating-recording frequency used during emission testing. You may not use interpolation or filtering to alter the recorded values.

(iv) Switch the flow to allow the blended span gases to flow to the analyzer. If you intend to use the data from this test to determine t_{50} for time alignment, record this time as t_0.

(v) Allow for transport delays and the slowest analyzer's full response.

(vi) Switch the flow to allow zero gas to flow to the analyzer. If you intend to use the data from this test to determine t_{50} for time alignment, record this time as t_{100}.

(vii) Allow for transport delays and the slowest analyzer's full response.

(viii) Repeat the steps in paragraphs (d)(3)(iv) through (vii) of this section to record seven full cycles, ending with zero gas flowing to the analyzers.

(ix) Stop recording.

(e) *Performance evaluation.* (1) If you choose to demonstrate compliance with paragraph (c)(1) of this section, use the data from paragraph (d)(3) of this section to calculate the mean rise time, t_{10-90}, and mean fall time, t_{90-10}, for each of the analyzers being verified. You may use interpolation between recorded values to determine rise and fall times. If the recording frequency used during emission testing is different from the analyzer's output update frequency, you must use the lower of these two frequencies for this verification. Multiply these times (in seconds) by their respective updating-recording frequencies in Hertz (1/second). The resulting product must be at least 5 for both rise time and fall time. If either value is less than 5, increase the updating-recording frequency, or adjust the flows or design of the sampling system to increase the rise time and fall time as needed. You may also configure analog or digital filters before recording to increase rise and fall times. In no case may the mean rise time or mean fall time be greater than 10 seconds.

(2) If a measurement system fails the criterion in paragraph (e)(1) of this section, ensure that signals from the system are updated and recorded at a frequency of at least 5 Hz. In no case may the mean rise time or mean fall time be greater than 10 seconds.

(3) If a measurement system fails the criteria in paragraphs (e)(1) and (2) of this section, you may use the measurement system only if the deficiency does not adversely affect your ability to show compliance with the applicable standards.

(f) *Transformation time*, t_{50}, determination. If you choose to determine t_{50} for purposes of time alignment using data generated in paragraph (d)(3) of this section, calculate the mean t_{0-50} and the mean t_{100-50} from the recorded data. Average these two values to determine the final t_{50} for the purposes of time alignment in accordance with § 1065.650(c)(2)(i).

[73 FR 59325, Oct. 8, 2008]

§ 1065.309 Continuous gas analyzer system-response and updating-recording verification—for gas analyzers continuously compensated for other gas species.

(a) *Scope and frequency.* This section describes a verification procedure for system response and updating-recording frequency for continuous gas analyzers that output a single gas species mole fraction (i.e., concentration) based on a continuous combination of multiple gas species measured with multiple detectors (i.e., gas analyzers continuously compensated for other gas species). See § 1065.308 for verification procedures that apply to continuous gas analyzers that are not continuously compensated for other

gas species or that use only one detector for gaseous species. Perform this verification to determine the system response of the continuous gas analyzer and its sampling system. This verification is required for continuous gas analyzers used for transient or ramped-modal testing. You need not perform this verification for batch gas analyzers or for continuous gas analyzers that are used only for discrete-mode testing. For this check we consider water vapor a gaseous constituent. This verification does not apply to any processing of individual analyzer signals that are time aligned to their t_{50} times and were verified according to §1065.308. For example, this verification does not apply to correction for water removed from the sample done in post-processing according to §1065.659 and it does not apply to NMHC determination from THC and CH_4 according to §1065.660. Perform this verification after initial installation (i.e., test cell commissioning) and after any modifications to the system that would change the system response.

(b) *Measurement principles*. This procedure verifies that the updating and recording frequencies match the overall system response to a rapid change in the value of concentrations at the sample probe. It indirectly verifies the time-alignment and uniform response of all the continuous gas detectors used to generate a continuously combined/compensated concentration measurement signal. Gas analyzer systems must be optimized such that their overall response to rapid change in concentration is updated and recorded at an appropriate frequency to prevent loss of information. This test also verifies that the measurement system meets a minimum response time. For this procedure, ensure that all compensation algorithms and humidity corrections are turned on. You may use the results of this test to determine transformation time, t_{50}, for the purposes of time alignment of continuous data in accordance with §1065.650(c)(2)(i). You may also use an alternate procedure to determine t_{50} consistent with good engineering judgment. Note that any such procedure for determining t_{50} must account for both transport delay and analyzer response time.

(c) *System requirements*. Demonstrate that each continuously combined/compensated concentration measurement has adequate updating and recording frequencies and has a minimum rise time and a minimum fall time during a system response to a rapid change in multiple gas concentrations, including H_2O concentration if H_2O compensation is applied. You must meet one of the following criteria:

(1) The product of the mean rise time, t_{10-90}, and the frequency at which the system records an updated concentration must be at least 5, and the product of the mean fall time, t_{90-10}, and the frequency at which the system records an updated concentration must be at least 5. If the recording frequency is different than the update frequency of the continuously combined/compensated signal, you must use the lower of these two frequencies for this verification. This criterion makes no assumption regarding the frequency content of changes in emission concentrations during emission testing; therefore, it is valid for any testing. Also, the mean rise time must be at or below 10 seconds and the mean fall time must be at or below 10 seconds.

(2) The frequency at which the system records an updated concentration must be at least 5 Hz. This criterion assumes that the frequency content of significant changes in emission concentrations during emission testing do not exceed 1 Hz. Also, the mean rise time must be at or below 10 seconds and the mean fall time must be at or below 10 seconds.

(3) You may use other criteria if we approve them in advance.

(4) You may meet the overall PEMS verification in §1065.920 instead of the verification in this section for field testing with PEMS.

(d) *Procedure*. Use the following procedure to verify the response of each continuously compensated analyzer (verify the combined signal, not each individual continuously combined concentration signal):

(1) *Instrument setup.* Follow the analyzer manufacturer's start-up and operating instructions. Adjust the measurement system as needed to optimize performance. Run this verification with the analyzer operating in the same manner you will use for emission testing. If the analyzer shares its sampling system with other analyzers, and if gas flow to the other analyzers will affect the system response time, then start up and operate the other analyzers while running this verification test. You may run this verification test on multiple analyzers sharing the same sampling system at the same time. If you use any analog or real-time digital filters during emission testing, you must operate those filters in the same manner during this verification.

(2) *Equipment setup.* We recommend using minimal lengths of gas transfer lines between all connections and fast-acting three-way valves (2 inlets, 1 outlet) to control the flow of zero and blended span gases to the sample system's probe inlet or a tee near the outlet of the probe. Normally the gas flow rate is higher than the probe sample flow rate and the excess is overflowed out the inlet of the probe. If the gas flow rate is lower than the probe flow rate, the gas concentrations must be adjusted to account for the dilution from ambient air drawn into the probe. Select span gases for the species being continuously combined, other than H_2O. Select concentrations of compensating species that will yield concentrations of these species at the analyzer inlet that covers the range of concentrations expected during testing. You may use binary or multi-gas span gases. You may use a gas blending or mixing device to blend span gases. A gas blending or mixing device is recommended when blending span gases diluted in N_2 with span gases diluted in air. You may use a multi-gas span gas, such as NO-CO-CO_2-C_3H_8-CH_4, to verify multiple analyzers at the same time. In designing your experimental setup, avoid pressure pulsations due to stopping the flow through the gas blending device. If H_2O correction is applicable, then span gases must be humidified before entering the analyzer; however, you may not humidify NO_2 span gas by passing it through a sealed humidification vessel that contains water. You must humidify NO_2 span gas with another moist gas stream. We recommend humidifying your NO-CO-CO_2-C_3H_8-CH_4, balance N_2 blended gas by flowing the gas mixture through a sealed vessel that humidifies the gas by bubbling it through distilled water and then mixing the gas with dry NO_2 gas, balance purified synthetic air. If your system does not use a sample dryer to remove water from the sample gas, you must humidify your span gas to the highest sample H_2O content that you estimate during emission sampling. If your system uses a sample dryer during testing, it must pass the sample dryer verification check in §1065.342, and you must humidify your span gas to an H_2O content greater than or equal to the level determined in §1065.145(e)(2). If you are humidifying span gases without NO_2, use good engineering judgment to ensure that the wall temperatures in the transfer lines, fittings, and valves from the humidifying system to the probe are above the dewpoint required for the target H_2O content. If you are humidifying span gases with NO_2, use good engineering judgment to ensure that there is no condensation in the transfer lines, fittings, or valves from the point where humidified gas is mixed with NO_2 span gas to the probe. We recommend that you design your setup so that the wall temperatures in the transfer lines, fittings, and valves from the humidifying system to the probe are at least 5 °C above the local sample gas dewpoint. Operate the measurement and sample handling system as you do for emission testing. Make no modifications to the sample handling system to reduce the risk of condensation. Flow humidified gas through the sampling system before this check to allow stabilization of the measurement system's sampling handling system to occur, as it would for an emission test.

(3) *Data collection.* (i) Start the flow of zero gas.

(ii) Allow for stabilization, accounting for transport delays and the slowest analyzer's full response.

(iii) Start recording data. For this verification you must record data at a frequency greater than or equal to that of the updating-recording frequency

used during emission testing. You may not use interpolation or filtering to alter the recorded values.

(iv) Switch the flow to allow the blended span gases to flow to the analyzer. If you intend to use the data from this test to determine t_{50} for time alignment, record this time as t_0.

(v) Allow for transport delays and the slowest analyzer's full response.

(vi) Switch the flow to allow zero gas to flow to the analyzer. If you intend to use the data from this test to determine t_{50} for time alignment, record this time as t_{100}.

(vii) Allow for transport delays and the slowest analyzer's full response.

(viii) Repeat the steps in paragraphs (d)(3)(iv) through (vii) of this section to record seven full cycles, ending with zero gas flowing to the analyzers.

(ix) Stop recording.

(e) *Performance evaluations.* (1) If you choose to demonstrate compliance with paragraph (c)(1) of this section, use the data from paragraph (d)(3) of this section to calculate the mean rise time, t_{10-90}, and mean fall time, t_{90-10}, for the continuously combined signal from each analyzer being verified. You may use interpolation between recorded values to determine rise and fall times. If the recording frequency used during emission testing is different from the analyzer's output update frequency, you must use the lower of these two frequencies for this verification. Multiply these times (in seconds) by their respective updating-recording frequencies in Hz (1/second). The resulting product must be at least 5 for both rise time and fall time. If either value is less than 5, increase the updating-recording frequency or adjust the flows or design of the sampling system to increase the rise time and fall time as needed. You may also configure analog or digital filters before recording to increase rise and fall times. In no case may the mean rise time or mean fall time be greater than 10 seconds.

(2) If a measurement system fails the criterion in paragraph (e)(1) of this section, ensure that signals from the system are updated and recorded at a frequency of at least 5 Hz. In no case may the mean rise time or mean fall time be greater than 10 seconds.

(3) If a measurement system fails the criteria in paragraphs (e)(1) and (2) of this section, you may use the measurement system only if the deficiency does not adversely affect your ability to show compliance with the applicable standards.

(f) *Transformation time, t_{50}, determination.* If you choose to determine t_{50} for purposes of time alignment using data generated in paragraph (d)(3) of this section, calculate the mean t_{0-50} and the mean t_{100-50} from the recorded data. Average these two values to determine the final t_{50} for the purposes of time alignment in accordance with § 1065.650(c)(2)(i).

[73 FR 59326, Oct. 8, 2008, as amended at 75 FR 23039, Apr. 30, 2010]

MEASUREMENT OF ENGINE PARAMETERS AND AMBIENT CONDITIONS

§ 1065.310 Torque calibration.

(a) *Scope and frequency.* Calibrate all torque-measurement systems including dynamometer torque measurement transducers and systems upon initial installation and after major maintenance. Use good engineering judgment to repeat the calibration. Follow the torque transducer manufacturer's instructions for linearizing your torque sensor's output. We recommend that you calibrate the torque-measurement system with a reference force and a lever arm.

(b) *Recommended procedure.* (1) *Reference force quantification.* Use either a set of dead-weights or a reference meter such as strain gage or a proving ring to quantify the reference force, NIST-traceable within ±0.5% uncertainty.

(2) *Lever-arm length quantification.* Quantify the lever arm length, NIST-traceable within ±0.5% uncertainty. The lever arm's length must be measured from the centerline of the dynamometer to the point at which the reference force is measured. The lever arm must be perpendicular to gravity (i.e., horizontal), and it must be perpendicular to the dynamometer's rotational axis. Balance the lever arm's torque or quantify its net hanging torque, NIST-traceable within ±1% uncertainty, and account for it as part of the reference torque.

(c) *Dead-weight calibration*. This technique applies a known force by hanging known weights at a known distance along a lever arm. Make sure the weights' lever arm is perpendicular to gravity (i.e., horizontal) and perpendicular to the dynamometer's rotational axis. Apply at least six calibration-weight combinations for each applicable torque-measuring range, spacing the weight quantities about equally over the range. Oscillate or rotate the dynamometer during calibration to reduce frictional static hysteresis. Determine each weight's force by multiplying its NIST-traceable mass by the local acceleration of Earth's gravity (using this equation: force = mass · acceleration). The local acceleration of gravity, a_g, at your latitude, longitude, and elevation may be determined by entering position and elevation data into the U.S. National Oceanographic and Atmospheric Administration's surface gravity prediction Web site at *http://www.ngs.noaa.gov/cgi-bin/grav_pdx.prl*. If this Web site is unavailable, you may use the equation in §1065.630, which returns the local acceleration of gravity based on a given latitude. In this case, calculate the reference torque as the weights' reference force multiplied by the lever arm reference length (using this equation: torque = force · lever arm length).

(d) *Strain gage or proving ring calibration*. This technique applies force either by hanging weights on a lever arm (these weights and their lever arm length are not used as part of the reference torque determination) or by operating the dynamometer at different torques. Apply at least six force combinations for each applicable torque-measuring range, spacing the force quantities about equally over the range. Oscillate or rotate the dynamometer during calibration to reduce frictional static hysteresis. In this case, the reference torque is determined by multiplying the force output from the reference meter (such as a strain gage or proving ring) by its effective lever-arm length, which you measure from the point where the force measurement is made to the dynamometer's rotational axis. Make sure you measure this length perpendicular to the reference meter's measurement axis and perpendicular to the dynamometer's rotational axis.

[70 FR 40516, July 13, 2005, as amended at 73 FR 37305, June 30, 2008]

§1065.315 Pressure, temperature, and dewpoint calibration.

(a) Calibrate instruments for measuring pressure, temperature, and dewpoint upon initial installation. Follow the instrument manufacturer's instructions and use good engineering judgment to repeat the calibration, as follows:

(1) *Pressure*. We recommend temperature-compensated, digital-pneumatic, or deadweight pressure calibrators, with data-logging capabilities to minimize transcription errors. We recommend using calibration reference quantities that are NIST-traceable within 0.5% uncertainty.

(2) *Temperature*. We recommend digital dry-block or stirred-liquid temperature calibrators, with data logging capabilities to minimize transcription errors. We recommend using calibration reference quantities that are NIST-traceable within 0.5% uncertainty. You may perform the linearity verification for temperature measurement systems with thermocouples, RTDs, and thermistors by removing the sensor from the system and using a simulator in its place. Use a NIST-traceable simulator that is independently calibrated and, as appropriate, cold-junction compensated. The simulator uncertainty scaled to temperature must be less than 0.5% of $T_{max.}$ If you use this option, you must use sensors that the supplier states are accurate to better than 0.5% of T_{max} compared with their standard calibration curve.

(3) *Dewpoint*. We recommend a minimum of three different temperature-equilibrated and temperature-monitored calibration salt solutions in containers that seal completely around the dewpoint sensor. We recommend using calibration reference quantities that are NIST-traceable within 0.5% uncertainty.

(b) You may remove system components for off-site calibration. We recommend specifying calibration reference quantities that are NIST-traceable within 0.5% uncertainty.

[70 FR 40516, July 13, 2005, as amended at 73 FR 37305, June 30, 2008; 75 FR 23040, Apr. 30, 2010]

FLOW-RELATED MEASUREMENTS

§ 1065.320 Fuel-flow calibration.

(a) Calibrate fuel-flow meters upon initial installation. Follow the instrument manufacturer's instructions and use good engineering judgment to repeat the calibration.

(b) You may also develop a procedure based on a chemical balance of carbon or oxygen in engine exhaust.

(c) You may remove system components for off-site calibration. When installing a flow meter with an off-site calibration, we recommend that you consider the effects of the tubing configuration upstream and downstream of the flow meter. We recommend specifying calibration reference quantities that are NIST-traceable within 0.5% uncertainty.

§ 1065.325 Intake-flow calibration.

(a) Calibrate intake-air flow meters upon initial installation. Follow the instrument manufacturer's instructions and use good engineering judgment to repeat the calibration. We recommend using a calibration subsonic venturi, ultrasonic flow meter or laminar flow element. We recommend using calibration reference quantities that are NIST-traceable within 0.5% uncertainty.

(b) You may remove system components for off-site calibration. When installing a flow meter with an off-site calibration, we recommend that you consider the effects of the tubing configuration upstream and downstream of the flow meter. We recommend specifying calibration reference quantities that are NIST-traceable within 0.5% uncertainty.

(c) If you use a subsonic venturi or ultrasonic flow meter for intake flow measurement, we recommend that you calibrate it as described in § 1065.340.

§ 1065.330 Exhaust-flow calibration.

(a) Calibrate exhaust-flow meters upon initial installation. Follow the instrument manufacturer's instructions and use good engineering judgment to repeat the calibration. We recommend that you use a calibration subsonic venturi or ultrasonic flow meter and simulate exhaust temperatures by incorporating a heat exchanger between the calibration meter and the exhaust-flow meter. If you can demonstrate that the flow meter to be calibrated is insensitive to exhaust temperatures, you may use other reference meters such as laminar flow elements, which are not commonly designed to withstand typical raw exhaust temperatures. We recommend using calibration reference quantities that are NIST-traceable within 0.5% uncertainty.

(b) You may remove system components for off-site calibration. When installing a flow meter with an off-site calibration, we recommend that you consider the effects of the tubing configuration upstream and downstream of the flow meter. We recommend specifying calibration reference quantities that are NIST-traceable within 0.5% uncertainty.

(c) If you use a subsonic venturi or ultrasonic flow meter for raw exhaust flow measurement, we recommend that you calibrate it as described in § 1065.340.

§ 1065.340 Diluted exhaust flow (CVS) calibration.

(a) *Overview*. This section describes how to calibrate flow meters for diluted exhaust constant-volume sampling (CVS) systems.

(b) *Scope and frequency*. Perform this calibration while the flow meter is installed in its permanent position. Perform this calibration after you change any part of the flow configuration upstream or downstream of the flow meter that may affect the flow-meter calibration. Perform this calibration upon initial CVS installation and whenever corrective action does not resolve a failure to meet the diluted exhaust flow verification (i.e., propane check) in § 1065.341.

(c) *Reference flow meter*. Calibrate a CVS flow meter using a reference flow meter such as a subsonic venturi flow

meter, a long-radius ASME/NIST flow nozzle, a smooth approach orifice, a laminar flow element, a set of critical flow venturis, or an ultrasonic flow meter. Use a reference flow meter that reports quantities that are NIST-traceable within ±1% uncertainty. Use this reference flow meter's response to flow as the reference value for CVS flowmeter calibration.

(d) *Configuration*. Do not use an upstream screen or other restriction that could affect the flow ahead of the reference flow meter, unless the flow meter has been calibrated with such a restriction.

(e) *PDP calibration*. Calibrate a positive-displacement pump (PDP) to determine a flow-versus-PDP speed equation that accounts for flow leakage across sealing surfaces in the PDP as a function of PDP inlet pressure. Determine unique equation coefficients for each speed at which you operate the PDP. Calibrate a PDP flow meter as follows:

(1) Connect the system as shown in Figure 1 of this section.

(2) Leaks between the calibration flow meter and the PDP must be less than 0.3% of the total flow at the lowest calibrated flow point; for example, at the highest restriction and lowest PDP-speed point.

(3) While the PDP operates, maintain a constant temperature at the PDP inlet within ±2% of the mean absolute inlet temperature, $\bar{T}_{in}$.

(4) Set the PDP speed to the first speed point at which you intend to calibrate.

(5) Set the variable restrictor to its wide-open position.

(6) Operate the PDP for at least 3 min to stabilize the system. Continue operating the PDP and record the mean values of at least 30 seconds of sampled data of each of the following quantities:

(i) The mean flow rate of the reference flow meter, $\bar{n}_{ref}$. This may include several measurements of different quantities, such as reference meter pressures and temperatures, for calculating $\bar{n}_{ref}$.

(ii) The mean temperature at the PDP inlet, $\bar{T}_{in}$.

(iii) The mean static absolute pressure at the PDP inlet, $\bar{p}_{in}$.

(iv) The mean static absolute pressure at the PDP outlet, $\bar{p}_{out}$.

(v) The mean PDP speed, $\bar{f}_{nPDP}$.

(7) Incrementally close the restrictor valve to decrease the absolute pressure at the inlet to the PDP, $\bar{p}_{in}$.

(8) Repeat the steps in paragraphs (e)(6) and (7) of this section to record data at a minimum of six restrictor positions ranging from the wide open restrictor position to the minimum expected pressure at the PDP inlet.

(9) Calibrate the PDP by using the collected data and the equations in §1065.640.

(10) Repeat the steps in paragraphs (e)(6) through (9) of this section for each speed at which you operate the PDP.

(11) Use the equations in §1065.642 to determine the PDP flow equation for emission testing.

(12) Verify the calibration by performing a CVS verification (i.e., propane check) as described in §1065.341.

(13) Do not use the PDP below the lowest inlet pressure tested during calibration.

(f) *CFV calibration*. Calibrate a critical-flow venturi (CFV) to verify its discharge coefficient, C_d, at the lowest expected static differential pressure between the CFV inlet and outlet. Calibrate a CFV flow meter as follows:

(1) Connect the system as shown in Figure 1 of this section.

(2) Start the blower downstream of the CFV.

(3) While the CFV operates, maintain a constant temperature at the CFV inlet within ±2% of the mean absolute inlet temperature, $\bar{T}_{in}$.

(4) Leaks between the calibration flow meter and the CFV must be less than 0.3 % of the total flow at the highest restriction.

(5) Set the variable restrictor to its wide-open position. Instead of a variable restrictor, you may alternately vary the pressure downstream of the CFV by varying blower speed or by introducing a controlled leak. Note that some blowers have limitations on nonloaded conditions.

(6) Operate the CFV for at least 3 min to stabilize the system. Continue operating the CFV and record the mean values of at least 30 seconds of sampled

data of each of the following quantities:

(i) The mean flow rate of the reference flow meter, $\overline{n}_{ref}$. This may include several measurements of different quantities, such as reference meter pressures and temperatures, for calculating $\overline{n}_{ref}$.

(ii) The mean dewpoint of the calibration air, $\bar{T}_{\mathrm{dew}}$. See §1065.640 for permissible assumptions during emission measurements.

(iii) The mean temperature at the venturi inlet, $\bar{T}_{in}$.

(iv) The mean static absolute pressure at the venturi inlet, $\bar{p}_{in}$.

(v) The mean static differential pressure between the CFV inlet and the CFV outlet, $\Delta\bar{p}_{CFV}$.

(7) Incrementally close the restrictor valve or decrease the downstream pressure to decrease the differential pressure across the CFV,$\Delta\bar{p}_{\mathrm{CFV}}$.

(8) Repeat the steps in paragraphs (f)(6) and (7) of this section to record mean data at a minimum of ten restrictor positions, such that you test the fullest practical range of $\Delta\bar{p}_{CFV}$ expected during testing. We do not require that you remove calibration components or CVS components to calibrate at the lowest possible restrictions.

(9) Determine C_{d} and the lowest allowable pressure ratio, r, according to §1065.640.

(10) Use C_{d} to determine CFV flow during an emission test. Do not use the CFV below the lowest allowed r, as determined in §1065.640.

(11) Verify the calibration by performing a CVS verification (i.e., propane check) as described in §1065.341.

(12) If your CVS is configured to operate more than one CFV at a time in parallel, calibrate your CVS by one of the following:

(i) Calibrate every combination of CFVs according to this section and §1065.640. Refer to §1065.642 for instructions on calculating flow rates for this option.

(ii) Calibrate each CFV according to this section and §1065.640. Refer to §1065.642 for instructions on calculating flow rates for this option.

(g) *SSV calibration.* Calibrate a subsonic venturi (SSV) to determine its calibration coefficient, C_d , for the expected range of inlet pressures. Calibrate an SSV flow meter as follows:

(1) Connect the system as shown in Figure 1 of this section.

(2) Start the blower downstream of the SSV.

(3) Leaks between the calibration flow meter and the SSV must be less than 0.3 % of the total flow at the highest restriction.

(4) While the SSV operates, maintain a constant temperature at the SSV inlet within ±2 % of the mean absolute inlet temperature, $\bar{T}_{in}$.

(5) Set the variable restrictor or variable-speed blower to a flow rate greater than the greatest flow rate expected during testing. You may not extrapolate flow rates beyond calibrated values, so we recommend that you make sure the Reynolds number, $Re^{\#}$, at the SSV throat at the greatest calibrated flow rate is greater than the maximum $Re^{\#}$ expected during testing.

(6) Operate the SSV for at least 3 min to stabilize the system. Continue operating the SSV and record the mean of at least 30 seconds of sampled data of each of the following quantities:

(i) The mean flow rate of the reference flow meter,$\overline{n}_{\mathrm{ref}}$. This may include several measurements of different quantities, such as reference meter pressures and temperatures, for calculating $\overline{n}_{\mathrm{ref}}$.

(ii) Optionally, the mean dewpoint of the calibration air, $\bar{T}_{dew}$. See §1065.640 for permissible assumptions.

(iii) The mean temperature at the venturi inlet, $\bar{T}_{in}$.

(iv) The mean static absolute pressure at the venturi inlet, $\bar{p}_{in}$.

(v) Static differential pressure between the static pressure at the venturi inlet and the static pressure at the venturi throat, $\Delta\bar{p}_{SSV}$.

(7) Incrementally close the restrictor valve or decrease the blower speed to decrease the flow rate.

(8) Repeat the steps in paragraphs (g)(6) and (7) of this section to record data at a minimum of ten flow rates.

(9) Determine a functional form of C_d versus $Re^{\#}$ by using the collected data and the equations in §1065.640.

(10) Verify the calibration by performing a CVS verification (i.e., propane check) as described in §1065.341 using the new C_d versus $Re^{\#}$ equation.

(11) Use the SSV only between the minimum and maximum calibrated flow rates.

(12) Use the equations in § 1065.642 to determine SSV flow during a test.

(h) *Ultrasonic flow meter calibration.* [Reserved]

Figure 1 of 1065.340 CVS calibration configurations.

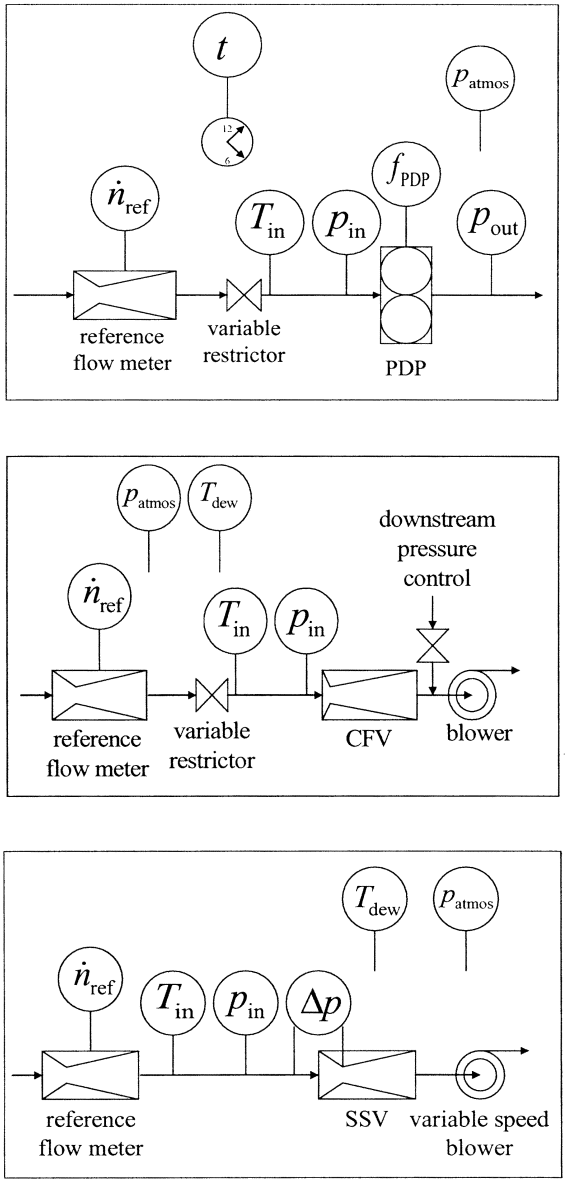

[70 FR 40516, July 13, 2005, as amended at 73 FR 37305, June 30, 2008; 75 FR 68463, Nov. 8, 2010]

§ 1065.341 CVS and batch sampler verification (propane check).

(a) A propane check serves as a CVS verification to determine if there is a discrepancy in measured values of diluted exhaust flow. A propane check also serves as a batch-sampler verification to determine if there is a discrepancy in a batch sampling system that extracts a sample from a CVS, as described in paragraph (g) of this section. Using good engineering judgment and safe practices, this check may be performed using a gas other than propane, such as CO_2 or CO. A failed propane check might indicate one or more problems that may require corrective action, as follows:

(1) *Incorrect analyzer calibration*. Recalibrate, repair, or replace the FID analyzer.

(2) *Leaks*. Inspect CVS tunnel, connections, fasteners, and HC sampling system, and repair or replace components.

(3) *Poor mixing*. Perform the verification as described in this section while traversing a sampling probe across the tunnel's diameter, vertically and horizontally. If the analyzer response indicates any deviation exceeding ±2% of the mean measured concentration, consider operating the CVS at a higher flow rate or installing a mixing plate or orifice to improve mixing.

(4) *Hydrocarbon contamination in the sample system*. Perform the hydrocarbon-contamination verification as described in § 1065.520.

(5) *Change in CVS calibration*. Perform an in-situ calibration of the CVS flow meter as described in § 1065.340.

(6) *Other problems with the CVS or sampling verification hardware or software*.Inspect the CVS system, CVS verification hardware, and software for discrepancies.

(b) A propane check uses either a reference mass or a reference flow rate of C_3H_8 as a tracer gas in a CVS. Note that if you use a reference flow rate, account for any non-ideal gas behavior of C_3H_8 in the reference flow meter. Refer to § 1065.640 and § 1065.642, which describe how to calibrate and use certain flow meters. Do not use any ideal gas assumptions in § 1065.640 and § 1065.642. The propane check compares the calculated mass of injected C_3H_8 using HC measurements and CVS flow rate measurements with the reference value.

(c) Prepare for the propane check as follows:

(1) If you use a reference mass of C_3H_8 instead of a reference flow rate, obtain a cylinder charged with C_3H_8. Determine the reference cylinder's mass of C_3H_8 within ±0.5% of the amount of C_3H_8 that you expect to use.

(2) Select appropriate flow rates for the CVS and C_3H_8.

(3) Select a C_3H_8 injection port in the CVS. Select the port location to be as close as practical to the location where you introduce engine exhaust into the CVS. Connect the C_3H_8 cylinder to the injection system.

(4) Operate and stabilize the CVS.

(5) Preheat or precool any heat exchangers in the sampling system.

(6) Allow heated and cooled components such as sample lines, filters, chillers, and pumps to stabilize at operating temperature.

(7) You may purge the HC sampling system during stabilization.

(8) If applicable, perform a vacuum side leak verification of the HC sampling system as described in § 1065.345.

(9) You may also conduct any other calibrations or verifications on equipment or analyzers.

(d) If you performed the vacuum-side leak verification of the HC sampling system as described in paragraph (c)(8) of this section, you may use the HC contamination procedure in § 1065.520(g) to verify HC contamination. Otherwise, zero, span, and verify contamination of the HC sampling system, as follows:

(1) Select the lowest HC analyzer range that can measure the C_3H_8 concentration expected for the CVS and C_3H_8 flow rates.

(2) Zero the HC analyzer using zero air introduced at the analyzer port.

(3) Span the HC analyzer using C_3H_8 span gas introduced at the analyzer port.

(4) Overflow zero air at the HC probe inlet or into a tee near the outlet of the probe.

(5) Measure the stable HC concentration of the HC sampling system as overflow zero air flows. For batch HC measurement, fill the batch container (such as a bag) and measure the HC overflow concentration.

(6) If the overflow HC concentration exceeds 2 μmol/mol, do not proceed until contamination is eliminated. Determine the source of the contamination and take corrective action, such as cleaning the system or replacing contaminated portions.

(7) When the overflow HC concentration does not exceed 2 μmol/mol, record this value as x_{THCinit} and use it to correct for HC contamination as described in § 1065.660.

(e) Perform the propane check as follows:

(1) For batch HC sampling, connect clean storage media, such as evacuated bags.

(2) Operate HC measurement instruments according to the instrument manufacturer's instructions.

(3) If you will correct for dilution air background concentrations of HC, measure and record background HC in the dilution air.

(4) Zero any integrating devices.

(5) Begin sampling, and start any flow integrators.

(6) Release the contents of the C_3H_8 reference cylinder at the rate you selected. If you use a reference flow rate of C_3H_8, start integrating this flow rate.

(7) Continue to release the cylinder's contents until at least enough C_3H_8 has been released to ensure accurate quantification of the reference C_3H_8 and the measured C_3H_8.

(8) Shut off the C_3H_8 reference cylinder and continue sampling until you have accounted for time delays due to sample transport and analyzer response.

(9) Stop sampling and stop any integrators.

(f) Perform post-test procedure as follows:

(1) If you used batch sampling, analyze batch samples as soon as practical.

(2) After analyzing HC, correct for contamination and background.

(3) Calculate total C_3H_8 mass based on your CVS and HC data as described in § 1065.650 and § 1065.660, using the molar mass of C_3H_8, M_{C3H8}, instead the effective molar mass of HC, M_{HC}.

(4) If you use a reference mass, determine the cylinder's propane mass within ±0.5% and determine the C_3H_8 reference mass by subtracting the empty cylinder propane mass from the full cylinder propane mass.

(5) Subtract the reference C_3H_8 mass from the calculated mass. If this difference is within ±2.0 % of the reference mass, the CVS passes this verification. If not, take corrective action as described in paragraph (a) of this section.

(g) You may repeat the propane check to verify a batch sampler, such as a PM secondary dilution system. (1) Configure the HC sampling system to extract a sample near the location of the batch sampler's storage media (such as a PM filter). If the absolute pressure at this location is too low to extract an HC sample, you may sample HC from the batch sampler pump's exhaust. Use caution when sampling from pump exhaust because an otherwise acceptable pump leak downstream of a batch sampler flow meter will cause a false failure of the propane check.

(2) Repeat the propane check described in this section, but sample HC from the batch sampler.

(3) Calculate C_3H_8 mass, taking into account any secondary dilution from the batch sampler.

(4) Subtract the reference C_3H_8 mass from the calculated mass. If this difference is within ±5% of the reference mass, the batch sampler passes this verification. If not, take corrective action as described in paragraph (a) of this section.

[70 FR 40516, July 13, 2005, as amended at 73 FR 37307, June 30, 2008; 73 FR 59328, Oct. 8, 2008]

§ 1065.342 Sample dryer verification.

(a) *Scope and frequency*. If you use a sample dryer as allowed in § 1065.145(e)(2) to remove water from the sample gas, verify the performance upon installation, after major maintenance, for thermal chiller. For osmotic membrane dryers, verify the performance upon installation, after major maintenance, and within 35 days of testing.

(b) *Measurement principles.* Water can inhibit an analyzer's ability to properly measure the exhaust component of interest and thus is sometimes removed before the sample gas reaches the analyzer. For example water can negatively interfere with a CLD's NO_X response through collisional quenching and can positively interfere with an NDIR analyzer by causing a response similar to CO.

(c) *System requirements.* The sample dryer must meet the specifications as determined in §1065.145(e)(2) for dewpoint, T_{dew}, and absolute pressure, p_{total}, downstream of the osmotic-membrane dryer or thermal chiller.

(d) *Sample dryer verification procedure.* Use the following method to determine sample dryer performance. Run this verification with the dryer and associated sampling system operating in the same manner you will use for emission testing (including operation of sample pumps). You may run this verification test on multiple sample dryers sharing the same sampling system at the same time. You may run this verification on the sample dryer alone, but you must use the maximum gas flow rate expected during testing. You may use good engineering judgment to develop a different protocol.

(1) Use PTFE or stainless steel tubing to make necessary connections.

(2) Humidify room air, N_2, or purified air by bubbling it through distilled water in a sealed vessel that humidifies the gas to the highest sample water content that you estimate during emission sampling.

(3) Introduce the humidified gas upstream of the sample dryer. You may disconnect the transfer line from the probe and introduce the humidified gas at the inlet of the transfer line of the sample system used during testing. You may use the sample pumps in the sample system to draw gas through the vessel.

(4) Maintain the sample lines, fittings, and valves from the location where the humidified gas water content is measured to the inlet of the sampling system at a temperature at least 5 °C above the local humidified gas dewpoint. For dryers used in NO_X sample systems, verify the sample system components used in this verification prevent aqueous condensation as required in §1065.145(d)(1)(i). We recommend that the sample system components be maintained at least 5 °C above the local humidified gas dewpoint to prevent aqueous condensation.

(5) Measure the humidified gas dewpoint, T_{dew}, and absolute pressure, p_{total}, as close as possible to the inlet of the sample dryer or inlet of the sample system to verify the water content is at least as high as the highest value that you estimated during emission sampling. You may verify the water content based on any humidity parameter (e.g. mole fraction water, local dewpoint, or absolute humidity).

(6) Measure the humidified gas dewpoint, T_{dew}, and absolute pressure, p_{total}, as close as possible to the outlet of the sample dryer. Note that the dewpoint changes with absolute pressure. If the dewpoint at the sample dryer outlet is measured at a different pressure, then this reading must be corrected to the dewpoint at the sample dryer absolute pressure, p_{total}.

(7) The sample dryer meets the verification if the dewpoint at the sample dryer pressure as measured in paragraph (d)(6) of this section is less than the dewpoint corresponding to the sample dryer specifications as determined in §1065.145(e)(2) plus 2 °C or if the mole fraction of water as measured in (d)(6) is less than the corresponding sample dryer specifications plus 0.002 mol/mol.

(e) *Alternate sample dryer verification procedure.* The following method may be used in place of the sample dryer verification procedure in (d) of this section. If you use a humidity sensor for continuous monitoring of dewpoint at the sample dryer outlet you may skip the performance check in §1065.342(d), but you must make sure that the dryer outlet humidity is at or below the minimum value used for quench, interference, and compensation checks.

[73 FR 37307, June 30, 2008, as amended at 73 FR 59328, Oct. 8, 2008; 75 FR 23040, Apr. 30, 2010]

§1065.345 Vacuum-side leak verification.

(a) *Scope and frequency.* Verify that there are no significant vacuum-side leaks using one of the leak tests described in this section. For laboratory

testing, perform the vacuum-side leak verification upon initial sampling system installation, within 8 hours before the start of the first test interval of each duty-cycle sequence, and after maintenance such as pre-filter changes. For field testing, perform the vacuum-side leak verification after each installation of the sampling system on the vehicle, prior to the start of the field test, and after maintenance such as pre-filter changes. This verification does not apply to any full-flow portion of a CVS dilution system.

(b) *Measurement principles.* A leak may be detected either by measuring a small amount of flow when there should be zero flow, or by detecting the dilution of a known concentration of span gas when it flows through the vacuum side of a sampling system.

(c) *Low-flow leak test.* Test a sampling system for low-flow leaks as follows:

(1) Seal the probe end of the system by taking one of the following steps:

(i) Cap or plug the end of the sample probe.

(ii) Disconnect the transfer line at the probe and cap or plug the transfer line.

(iii) Close a leak-tight valve located in the sample transfer line within 92 cm of the probe.

(2) Operate all vacuum pumps. After stabilizing, verify that the flow through the vacuum-side of the sampling system is less than 0.5% of the system's normal in-use flow rate. You may estimate typical analyzer and bypass flows as an approximation of the system's normal in-use flow rate.

(d) *Dilution-of-span-gas leak test.* You may use any gas analyzer for this test. If you use a FID for this test, correct for any HC contamination in the sampling system according to §1065.660. To avoid misleading results from this test, we recommend using only analyzers that have a repeatability of 0.5% or better at the span gas concentration used for this test. Perform a vacuum-side leak test as follows:

(1) Prepare a gas analyzer as you would for emission testing.

(2) Supply span gas to the analyzer port and verify that it measures the span gas concentration within its expected measurement accuracy and repeatability.

(3) Route overflow span gas to the inlet of the sample probe or at a tee fitting in the transfer line near the exit of the probe. You may use a valve upstream of the overflow fitting to prevent overflow of span gas out of the inlet of the probe, but you must then provide an overflow vent in the overflow supply line.

(4) Verify that the measured overflow span gas concentration is within ± 0.5% of the span gas concentration. A measured value lower than expected indicates a leak, but a value higher than expected may indicate a problem with the span gas or the analyzer itself. A measured value higher than expected does not indicate a leak.

(e) *Vacuum-decay leak test.* To perform this test you must apply a vacuum to the vacuum-side volume of your sampling system and then observe the leak rate of your system as a decay in the applied vacuum. To perform this test you must know the vacuum-side volume of your sampling system to within ± 10% of its true volume. For this test you must also use measurement instruments that meet the specifications of subpart C of this part and of this subpart D. Perform a vacuum-decay leak test as follows:

(1) Seal the probe end of the system as close to the probe opening as possible by taking one of the following steps:

(i) Cap or plug the end of the sample probe.

(ii) Disconnect the transfer line at the probe and cap or plug the transfer line.

(iii) Close a leak-tight valve located in the sample transfer line within 92 cm of the probe.

(2) Operate all vacuum pumps. Draw a vacuum that is representative of normal operating conditions. In the case of sample bags, we recommend that you repeat your normal sample bag pump-down procedure twice to minimize any trapped volumes.

(3) Turn off the sample pumps and seal the system. Measure and record the absolute pressure of the trapped gas and optionally the system absolute temperature. Wait long enough for any transients to settle and long enough for a leak at 0.5% to have caused a pressure change of at least 10 times the

resolution of the pressure transducer, then again record the pressure and optionally temperature.

(4) Calculate the leak flow rate based on an assumed value of zero for pumped-down bag volumes and based on known values for the sample system volume, the initial and final pressures, optional temperatures, and elapsed time. Using the calculations specified in 1065.644, verify that the vacuum-decay leak flow rate is less than 0.5% of the system's normal in-use flow rate.

[73 FR 37307, June 30, 2008, as amended at 73 FR 59328, Oct. 8, 2008; 75 FR 23040, Apr. 30, 2010]

CO AND CO_2 MEASUREMENTS

§ 1065.350 H_2O interference verification for CO_2 NDIR analyzers.

(a) *Scope and frequency*. If you measure CO_2 using an NDIR analyzer, verify the amount of H_2O interference after initial analyzer installation and after major maintenance.

(b) *Measurement principles*. H_2O can interfere with an NDIR analyzer's response to CO_2.

If the NDIR analyzer uses compensation algorithms that utilize measurements of other gases to meet this interference verification, simultaneously conduct these other measurements to test the compensation algorithms during the analyzer interference verification.

(c) *System requirements*. A CO_2 NDIR analyzer must have an H_2O interference that is within (0.0 ±0.4) mmol/mol, though we strongly recommend a lower interference that is within (0.0 ±0.2) mmol/mol.

(d) *Procedure*. Perform the interference verification as follows:

(1) Start, operate, zero, and span the CO_2 NDIR analyzer as you would before an emission test. If the sample is passed through a dryer during emission testing, you may run this verification test with the dryer if it meets the requirements of § 1065.342. Operate the dryer at the same conditions as you will for an emission test. You may also run this verification test without the sample dryer.

(2) Create a humidified test gas by bubbling zero gas that meets the specifications in § 1065.750 through distilled water in a sealed vessel. If the sample is not passed through a dryer during emission testing, control the vessel temperature to generate an H_2O level at least as high as the maximum expected during emission testing. If the sample is passed through a dryer during emission testing, control the vessel temperature to generate an H_2O level at least as high as the level determined in § 1065.145(e)(2) for that dryer.

(3) Introduce the humidified test gas into the sample system. You may introduce it downstream of any sample dryer, if one is used during testing.

(4) If the sample is not passed through a dryer during this verification test, measure the water mole fraction, $x_{H2O,}$ of the humidified test gas, as close as possible to the inlet of the analyzer. For example, measure dewpoint, $T_{dew,}$ and absolute pressure, $p_{total,}$ to calculate $x_{H2O.}$ Verify that the water content meets the requirement in paragraph (d)(2) of this section. If the sample is passed through a dryer during this verification test, you must verify that the water content of the humidified test gas downstream of the vessel meets the requirement in paragraph (d)(2) of this section based on either direct measurement of the water content (*e.g.*, dewpoint and pressure) or an estimate based on the vessel pressure and temperature. Use good engineering judgment to estimate the water content. For example, you may use previous direct measurements of water content to verify the vessel's level of saturation.

(5) If a sample dryer is not used in this verification test, use good engineering judgment to prevent condensation in the transfer lines, fittings, or valves from the point where x_{H2O} is measured to the analyzer. We recommend that you design your system so the wall temperatures in the transfer lines, fittings, and valves from the point where x_{H2O} is measured to the analyzer are at least 5 °C above the local sample gas dewpoint.

(6) Allow time for the analyzer response to stabilize. Stabilization time may include time to purge the transfer

line and to account for analyzer response.

(7) While the analyzer measures the sample's concentration, record 30 seconds of sampled data. Calculate the arithmetic mean of this data. The analyzer meets the interference verification if this value is within (0 ±0.4) mmol/mol.

[70 FR 40516, July 13, 2005, as amended at 73 FR 37308, June 30, 2008; 73 FR 59328, Oct. 8, 2008; 75 FR 23040, Apr. 30, 2010]

§ 1065.355 H_2O and CO_2 interference verification for CO NDIR analyzers.

(a) *Scope and frequency*. If you measure CO using an NDIR analyzer, verify the amount of H_2O and CO_2 interference after initial analyzer installation and after major maintenance.

(b) *Measurement principles*. H_2O and CO_2 can positively interfere with an NDIR analyzer by causing a response similar to CO. If the NDIR analyzer uses compensation algorithms that utilize measurements of other gases to meet this interference verification, simultaneously conduct these other measurements to test the compensation algorithms during the analyzer interference verification.

(c) *System requirements*. A CO NDIR analyzer must have combined H_2O and CO_2 interference that is within ±2 % of the flow-weighted mean concentration of CO expected at the standard, though we strongly recommend a lower interference that is within ±1%.

(d) *Procedure*. Perform the interference verification as follows:

(1) Start, operate, zero, and span the CO NDIR analyzer as you would before an emission test. If the sample is passed through a dryer during emission testing, you may run this verification test with the dryer if it meets the requirements of § 1065.342. Operate the dryer at the same conditions as you will for an emission test. You may also run this verification test without the sample dryer.

(2) Create a humidified CO_2 test gas by bubbling a CO_2 span gas that meets the specifications in § 1065.750 through distilled water in a sealed vessel. If the sample is not passed through a dryer during emission testing, control the vessel temperature to generate an H_2O level at least as high as the maximum expected during emission testing. If the sample is passed through a dryer during emission testing, control the vessel temperature to generate an H_2O level at least as high as the level determined in § 1065.145(e)(2) for that dryer. Use a CO_2 span gas concentration at least as high as the maximum expected during testing.

(3) Introduce the humidified CO_2 test gas into the sample system. You may introduce it downstream of any sample dryer, if one is used during testing.

(4) If the sample is not passed through a dryer during this verification test, measure the water mole fraction, $x_{H2O,}$ of the humidified CO_2 test gas as close as possible to the inlet of the analyzer. For example, measure dewpoint, $T_{dew,}$ and absolute pressure, $p_{total,}$ to calculate $x_{H2O.}$ Verify that the water content meets the requirement in paragraph (d)(2) of this section. If the sample is passed through a dryer during this verification test, you must verify that the water content of the humidified test gas downstream of the vessel meets the requirement in paragraph (d)(2) of this section based on either direct measurement of the water content (*e.g.*, dewpoint and pressure) or an estimate based on the vessel pressure and temperature. Use good engineering judgment to estimate the water content. For example, you may use previous direct measurements of water content to verify the vessel's level of saturation.

(5) If a sample dryer is not used in this verification test, use good engineering judgment to prevent condensation in the transfer lines, fittings, or valves from the point where x_{H2O} is measured to the analyzer. We recommend that you design your system so that the wall temperatures in the transfer lines, fittings, and valves from the point where x_{H2O} is measured to the analyzer are at least 5 °C above the local sample gas dewpoint.

(6) Allow time for the analyzer response to stabilize. Stabilization time may include time to purge the transfer line and to account for analyzer response.

(7) While the analyzer measures the sample's concentration, record its output for 30 seconds. Calculate the arithmetic mean of this data.

(8) The analyzer meets the interference verification if the result of paragraph (d)(7) of this section meets the tolerance in paragraph (c) of this section.

(9) You may also run interference procedures for CO_2 and H_2O separately. If the CO_2 and H_2O levels used are higher than the maximum levels expected during testing, you may scale down each observed interference value by multiplying the observed interference by the ratio of the maximum expected concentration value to the actual value used during this procedure. You may run separate interference concentrations of H_2O (down to 0.025 mol/mol H_2O content) that are lower than the maximum levels expected during testing, but you must scale up the observed H_2O interference by multiplying the observed interference by the ratio of the maximum expected H_2O concentration value to the actual value used during this procedure. The sum of the two scaled interference values must meet the tolerance in paragraph (c) of this section.

(e) *Exceptions*. The following exceptions apply:

(1) You may omit this verification if you can show by engineering analysis that for your CO sampling system and your emission-calculation procedures, the combined CO_2 and H_2O interference for your CO NDIR analyzer always affects your brake-specific CO emission results within ±0.5% of the applicable CO standard.

(2) You may use a CO NDIR analyzer that you determine does not meet this verification, as long as you try to correct the problem and the measurement deficiency does not adversely affect your ability to show that engines comply with all applicable emission standards.

[70 FR 40516, July 13, 2005, as amended at 73 FR 37308, June 30, 2008; 73 FR 59328, Oct. 8, 2008; 75 FR 23041, Apr. 30, 2010]

HYDROCARBON MEASUREMENTS

§ 1065.360 FID optimization and verification.

(a) *Scope and frequency*. For all FID analyzers, calibrate the FID upon initial installation. Repeat the calibration as needed using good engineering judgment. For a FID that measures THC, perform the following steps:

(1) Optimize the response to various hydrocarbons after initial analyzer installation and after major maintenance as described in paragraph (c) of this section.

(2) Determine the methane (CH_4) response factor after initial analyzer installation and after major maintenance as described in paragraph (d) of this section.

(3) Verify the methane (CH_4) response within 185 days before testing as described in paragraph (e) of this section.

(b) *Calibration*. Use good engineering judgment to develop a calibration procedure, such as one based on the FID-analyzer manufacturer's instructions and recommended frequency for calibrating the FID. Alternately, you may remove system components for off-site calibration. For a FID that measures THC, calibrate using C_3H_8 calibration gases that meet the specifications of § 1065.750. For a FID that measures CH_4, calibrate using CH_4 calibration gases that meet the specifications of § 1065.750. We recommend FID analyzer zero and span gases that contain approximately the flow-weighted mean concentration of O_2 expected during testing. If you use a FID to measure methane (CH_4) downstream of a nonmethane cutter, you may calibrate that FID using CH_4 calibration gases with the cutter. Regardless of the calibration gas composition, calibrate on a carbon number basis of one (C_1). For example, if you use a C_3H_8 span gas of concentration 200 μmol/mol, span the FID to respond with a value of 600 μmol/mol. As another example, if you use a CH_4 span gas with a concentration of 200 μmol/mol, span the FID to respond with a value of 200 μmol/mol.

(c) *THC FID response optimization*. This procedure is only for FID analyzers that measure THC. Use good engineering judgment for initial instrument start-up and basic operating adjustment using FID fuel and zero air. Heated FIDs must be within their required operating temperature ranges. Optimize FID response at the most common analyzer range expected during emission testing. Optimization involves adjusting flows and pressures of FID fuel, burner air, and sample to

minimize response variations to various hydrocarbon species in the exhaust. Use good engineering judgment to trade off peak FID response to propane calibration gases to achieve minimal response variations to different hydrocarbon species. For an example of trading off response to propane for relative responses to other hydrocarbon species, see SAE 770141 (incorporated by reference in § 1065.1010). Determine the optimum flow rates and/or pressures for FID fuel, burner air, and sample and record them for future reference.

(d) *THC FID CH_4 response factor determination.* This procedure is only for FID analyzers that measure THC. Since FID analyzers generally have a different response to CH_4 versus C_3H_8, determine each THC FID analyzer's CH_4 response factor, $RF_{CH4[THC-FID]}$, after FID optimization. Use the most recent $RF_{CH4[THC-FID]}$ measured according to this section in the calculations for HC determination described in § 1065.660 to compensate for CH_4 response. Determine $RF_{CH4[THC-FID]}$ as follows, noting that you do not determine $RF_{CH4[THC-FID]}$ for FIDs that are calibrated and spanned using CH_4 with a nonmethane cutter:

(1) Select a C_3H_8 span gas concentration that you use to span your analyzers before emission testing. Use only span gases that meet the specifications of § 1065.750. Record the C_3H_8 concentration of the gas.

(2) Select a CH_4 span gas concentration that you use to span your analyzers before emission testing. Use only span gases that meet the specifications of § 1065.750. Record the CH_4 concentration of the gas.

(3) Start and operate the FID analyzer according to the manufacturer's instructions.

(4) Confirm that the FID analyzer has been calibrated using C_3H_8. Calibrate on a carbon number basis of one (C_1). For example, if you use a C_3H_8 span gas of concentration 200 μmol/mol, span the FID to respond with a value of 600 μmol/mol.

(5) Zero the FID with a zero gas that you use for emission testing.

(6) Span the FID with the C_3H_8 span gas that you selected under paragraph (d)(1) of this section.

(7) Introduce at the sample port of the FID analyzer, the CH_4 span gas that you selected under paragraph (d)(2) of this section.

(8) Allow time for the analyzer response to stabilize. Stabilization time may include time to purge the analyzer and to account for its response.

(9) While the analyzer measures the CH_4 concentration, record 30 seconds of sampled data. Calculate the arithmetic mean of these values.

(10) Divide the mean measured concentration by the recorded span concentration of the CH_4 calibration gas. The result is the FID analyzer's response factor for CH_4, $RF_{CH4[THC-FID]}$.

(e) *THC FID methane (CH_4) response verification.* This procedure is only for FID analyzers that measure THC. If the value of $RF_{CH4[THC-FID]}$ from paragraph (d) of this section is within ±5.0% of its most recent previously determined value, the THC FID passes the methane response verification. For example, if the most recent previous value for $RF_{CH4[THC-FID]}$ was 1.05 and it changed by ±0.05 to become 1.10 or it changed by −0.05 to become 1.00, either case would be acceptable because ±4.8% is less than ±5.0%. Verify $RF_{CH4[THC-FID]}$ as follows:

(1) First verify that the flow rates and/or pressures of FID fuel, burner air, and sample are each within ±0.5% of their most recent previously recorded values, as described in paragraph (c) of this section. You may adjust these flow rates as necessary. Then determine the $RF_{CH4[THC-FID]}$ as described in paragraph (d) of this section and verify that it is within the tolerance specified in this paragraph (e).

(2) If $RF_{CH4[THC-FID]}$ is not within the tolerance specified in this paragraph (e), re-optimize the FID response as described in paragraph (c) of this section.

(3) Determine a new $RF_{CH4[THC-FID]}$ as described in paragraph (d) of this section. Use this new value of $RF_{CH4[THC-FID]}$ in the calculations for HC determination, as described in § 1065.660.

[73 FR 37308, June 30, 2008, as amended at 75 FR 23041, Apr. 30, 2010]

§ 1065.362 Non-stoichiometric raw exhaust FID O_2 interference verification.

(a) *Scope and frequency*. If you use FID analyzers for raw exhaust measurements from engines that operate in a non-stoichiometric mode of combustion (e.g., compression-ignition, lean-burn), verify the amount of FID O_2 interference upon initial installation and after major maintenance.

(b) *Measurement principles*. Changes in O_2 concentration in raw exhaust can affect FID response by changing FID flame temperature. Optimize FID fuel, burner air, and sample flow to meet this verification. Verify FID performance with the compensation algorithms for FID O_2 interference that you have active during an emission test.

(c) *System requirements*. Any FID analyzer used during testing must meet the FID O_2 interference verification according to the procedure in this section.

(d) *Procedure*. Determine FID O_2 interference as follows, noting that you may use one or more gas dividers to create the reference gas concentrations that are required to perform this verification:

(1) Select three span reference gases that contain a C_3H_8 concentration that you use to span your analyzers before emission testing. Use only span gases that meet the specifications of § 1065.750. You may use CH_4 span reference gases for FIDs calibrated on CH_4 with a nonmethane cutter. Select the three balance gas concentrations such that the concentrations of O_2 and N_2 represent the minimum, maximum, and average O_2 concentrations expected during testing. The requirement for using the average O_2 concentration can be removed if you choose to calibrate the FID with span gas balanced with the average expected oxygen concentration.

(2) Confirm that the FID analyzer meets all the specifications of § 1065.360.

(3) Start and operate the FID analyzer as you would before an emission test. Regardless of the FID burner's air source during testing, use zero air as the FID burner's air source for this verification.

(4) Zero the FID analyzer using the zero gas used during emission testing.

(5) Span the FID analyzer using a span gas that you use during emission testing.

(6) Check the zero response of the FID analyzer using the zero gas used during emission testing. If the mean zero response of 30 seconds of sampled data is within ±0.5% of the span reference value used in paragraph (d)(5) of this section, then proceed to the next step; otherwise restart the procedure at paragraph (d)(4) of this section.

(7) Check the analyzer response using the span gas that has the minimum concentration of O_2 expected during testing. Record the mean response of 30 seconds of stabilized sample data as $x_{O2minHC}$.

(8) Check the zero response of the FID analyzer using the zero gas used during emission testing. If the mean zero response of 30 seconds of stabilized sample data is within ±0.5% of the span reference value used in paragraph (d)(5) of this section, then proceed to the next step; otherwise restart the procedure at paragraph (d)(4) of this section.

(9) Check the analyzer response using the span gas that has the average concentration of O_2 expected during testing. Record the mean response of 30 seconds of stabilized sample data as $x_{O2avgHC}$.

(10) Check the zero response of the FID analyzer using the zero gas used during emission testing. If the mean zero response of 30 seconds of stabilized sample data is within ±0.5% of the span reference value used in paragraph (d)(5) of this section, proceed to the next step; otherwise restart the procedure at paragraph (d)(4) of this section.

(11) Check the analyzer response using the span gas that has the maximum concentration of O_2 expected during testing. Record the mean response of 30 seconds of stabilized sample data as $x_{O2maxHC}$.

(12) Check the zero response of the FID analyzer using the zero gas used during emission testing. If the mean zero response of 30 seconds of stabilized sample data is within ±0.5% of the span reference value used in paragraph (d)(5) of this section, then proceed to the next step; otherwise restart the procedure at paragraph (d)(4) of this section.

(13) Calculate the percent difference between $x_{O2maxHC}$ and its reference gas

concentration. Calculate the percent difference between $x_{O2avgHC}$ and its reference gas concentration. Calculate the percent difference between $x_{O2minHC}$ and its reference gas concentration. Determine the maximum percent difference of the three. This is the O_2 interference.

(14) If the O_2 interference is within ±2%, the FID passes the O_2 interference verification; otherwise perform one or more of the following to address the deficiency:

(i) Repeat the verification to determine if a mistake was made during the procedure.

(ii) Select zero and span gases for emission testing that contain higher or lower O_2 concentrations and repeat the verification.

(iii) Adjust FID burner air, fuel, and sample flow rates. Note that if you adjust these flow rates on a THC FID to meet the O_2 interference verification, you have reset RF_{CH4} for the next RF_{CH4} verification according to §1065.360. Repeat the O_2 interference verification after adjustment and determine RF_{CH4}.

(iv) Repair or replace the FID and repeat the O_2 interference verification.

(v) Demonstrate that the deficiency does not adversely affect your ability to demonstrate compliance with the applicable emission standards.

[70 FR 40516, July 13, 2005, as amended at 73 FR 37309, June 30, 2008]

§1065.365 Nonmethane cutter penetration fractions.

(a) *Scope and frequency*. If you use a FID analyzer and a nonmethane cutter (NMC) to measure methane (CH_4), determine the nonmethane cutter's penetration fractions of methane, PF_{CH4}, and ethane, PF_{C2H6}. As detailed in this section, these penetration fractions may be determined as a combination of NMC penetration fractions and FID analyzer response factors, depending on your particular NMC and FID analyzer configuration. Perform this verification after installing the nonmethane cutter. Repeat this verification within 185 days of testing to verify that the catalytic activity of the cutter has not deteriorated. Note that because nonmethane cutters can deteriorate rapidly and without warning if they are operated outside of certain ranges of gas concentrations and outside of certain temperature ranges, good engineering judgment may dictate that you determine a nonmethane cutter's penetration fractions more frequently.

(b) *Measurement principles*. A nonmethane cutter is a heated catalyst that removes nonmethane hydrocarbons from an exhaust sample stream before the FID analyzer measures the remaining hydrocarbon concentration. An ideal nonmethane cutter would have a methane penetration fraction, PF_{CH4}, of 1.000, and the penetration fraction for all other nonmethane hydrocarbons would be 0.000, as represented by PF_{C2H6}. The emission calculations in §1065.660 use the measured values from this verification to account for less than ideal NMC performance.

(c) *System requirements*. We do not limit NMC penetration fractions to a certain range. However, we recommend that you optimize a nonmethane cutter by adjusting its temperature to achieve a PF_{CH4} >0.85 and a PF_{C2H6} <0.02, as determined by paragraphs (d), (e), or (f) of this section, as applicable. If we use a nonmethane cutter for testing, it will meet this recommendation. If adjusting NMC temperature does not result in achieving both of these specifications simultaneously, we recommend that you replace the catalyst material. Use the most recently determined penetration values from this section to calculate HC emissions according to §1065.660 and §1065.665 as applicable.

(d) *Procedure for a FID calibrated with the NMC*. The method described in this paragraph (d) is recommended over the procedures specified in paragraphs (e) and (f) of this section. If your FID arrangement is such that a FID is always calibrated to measure CH_4 with the NMC, then span that FID with the NMC using a CH_4 span gas, set the product of that FID's CH_4 response factor and CH_4 penetration fraction, $RFPF_{CH4[NMC-FID]}$, equal to 1.0 for all emission calculations, and determine its combined ethane (C_2H_6) response factor and penetration fraction, $RFPF_{C2H6[NMC-FID]}$ as follows:

(1) Select CH_4 and C_2H_6 analytical gas mixtures and ensure that both mixtures meet the specifications of

§ 1065.750. Select a CH_4 concentration that you would use for spanning the FID during emission testing and select a C_2H_6 concentration that is typical of the peak NMHC concentration expected at the hydrocarbon standard or equal to the THC analyzer's span value.

(2) Start, operate, and optimize the nonmethane cutter according to the manufacturer's instructions, including any temperature optimization.

(3) Confirm that the FID analyzer meets all the specifications of § 1065.360.

(4) Start and operate the FID analyzer according to the manufacturer's instructions.

(5) Zero and span the FID with the nonmethane cutter as you would during emission testing. Span the FID through the cutter by using CH_4 span gas.

(6) Introduce the C_2H_6 analytical gas mixture upstream of the nonmethane cutter. Use good engineering judgment to address the effect of hydrocarbon contamination if your point of introduction is vastly different from the point of zero/span gas introduction.

(7) Allow time for the analyzer response to stabilize. Stabilization time may include time to purge the nonmethane cutter and to account for the analyzer's response.

(8) While the analyzer measures a stable concentration, record 30 seconds of sampled data. Calculate the arithmetic mean of these data points.

(9) Divide the mean C_2H_6 concentration by the reference concentration of C_2H_6, converted to a C_1 basis. The result is the C_2H_6 combined response factor and penetration fraction, $RFPF_{C2H6[NMC-FID]}$. Use this combined response factor and penetration fraction and the product of the CH_4 response factor and CH_4 penetration fraction, $RFPF_{CH4[NMC-FID]}$, set to 1.0 in emission calculations according to § 1065.660(b)(2)(i), § 1065.660(c)(1)(i), or § 1065.665, as applicable.

(e) *Procedure for a FID calibrated with propane, bypassing the NMC.* If you use a single FID for THC and CH_4 determination with an NMC that is calibrated with propane, C_3H_8, by bypassing the NMC, determine its penetration fractions, $PF_{C2H6[NMC-FID]}$ and $PF_{CH4[NMC-FID]}$, as follows:

(1) Select CH_4 and C_2H_6 analytical gas mixtures and ensure that both mixtures meet the specifications of § 1065.750. Select a CH_4 concentration that you would use for spanning the FID during emission testing and select a C_2H_6 concentration that is typical of the peak NMHC concentration expected at the hydrocarbon standard or equal to the THC analyzer's span value.

(2) Start and operate the nonmethane cutter according to the manufacturer's instructions, including any temperature optimization.

(3) Confirm that the FID analyzer meets all the specifications of § 1065.360.

(4) Start and operate the FID analyzer according to the manufacturer's instructions.

(5) Zero and span the FID as you would during emission testing. Span the FID by bypassing the cutter and by using C_3H_8 span gas.

(6) Introduce the C_2H_6 analytical gas mixture upstream of the nonmethane cutter. Use good engineering judgment to address the effect of hydrocarbon contamination if your point of introduction is vastly different from the point of zero/span gas introduction.

(7) Allow time for the analyzer response to stabilize. Stabilization time may include time to purge the nonmethane cutter and to account for the analyzer's response.

(8) While the analyzer measures a stable concentration, record 30 seconds of sampled data. Calculate the arithmetic mean of these data points.

(9) Reroute the flow path to bypass the nonmethane cutter, introduce the C_2H_6 analytical gas mixture, and repeat the steps in paragraph (e)(7) through (e)(8) of this section.

(10) Divide the mean C_2H_6 concentration measured through the nonmethane cutter by the mean C_2H_6 concentration measured after bypassing the nonmethane cutter. The result is the C_2H_6 penetration fraction, $PF_{C2H6[NMC-FID]}$. Use this penetration fraction according to § 1065.660(b)(2)(ii), § 1065.660(c)(1)(ii), or § 1065.665, as applicable.

(11) Repeat the steps in paragraphs (e)(6) through (e)(10) of this section, but with the CH_4 analytical gas mixture instead of C_2H_6. The result will be the CH_4 penetration fraction,

$PF_{CH4[NMC-FID]}$. Use this penetration fraction according to § 1065.660(b)(2)(ii), § 1065.660(c)(1)(ii), or § 1065.665, as applicable.

(f) *Procedure for a FID calibrated with methane, bypassing the NMC.* If you use a FID with an NMC that is calibrated with methane, CH_4, by bypassing the NMC, determine its combined ethane (C_2H_6) response factor and penetration fraction, $RFPF_{C2H6[NMC-FID]}$, as well as its CH_4 penetration fraction, $PF_{CH4[NMC-FID]}$, as follows:

(1) Select CH_4 and C_2H_6 analytical gas mixtures and ensure that both mixtures meet the specifications of § 1065.750. Select a CH_4 concentration that you would use for spanning the FID during emission testing and select a C_2H_6 concentration that is typical of the peak NMHC concentration expected at the hydrocarbon standard or equal to the THC analyzer's span value.

(2) Start and operate the nonmethane cutter according to the manufacturer's instructions, including any temperature optimization.

(3) Confirm that the FID analyzer meets all the specifications of § 1065.360.

(4) Start and operate the FID analyzer according to the manufacturer's instructions.

(5) Zero and span the FID as you would during emission testing. Span the FID by bypassing the cutter and by using CH_4 span gas. Note that you must span the FID on a C_1 basis. For example, if your span gas has a methane reference value of 100 μmol/mol, the correct FID response to that span gas is 100 μmol/mol because there is one carbon atom per CH_4 molecule.

(6) Introduce the C_2H_6 analytical gas mixture upstream of the nonmethane cutter. Use good engineering judgment to address the effect of hydrocarbon contamination if your point of introduction is vastly different from the point of zero/span gas introduction.

(7) Allow time for the analyzer response to stabilize. Stabilization time may include time to purge the nonmethane cutter and to account for the analyzer's response.

(8) While the analyzer measures a stable concentration, record 30 seconds of sampled data. Calculate the arithmetic mean of these data points.

(9) Divide the mean C_2H_6 concentration by the reference concentration of C_2H_6, converted to a C_1 basis. The result is the C_2H_6 combined response factor and penetration fraction, $RFPF_{C2H6[NMC-FID]}$. Use this combined response factor and penetration fraction according to § 1065.660(b)(2)(iii), § 1065.660(c)(1)(iii), or § 1065.665, as applicable.

(10) Introduce the CH_4 analytical gas mixture upstream of the nonmethane cutter. Use good engineering judgment to address the effect of hydrocarbon contamination if your point of introduction is vastly different from the point of zero/span gas introduction.

(11) Allow time for the analyzer response to stabilize. Stabilization time may include time to purge the nonmethane cutter and to account for the analyzer's response.

(12) While the analyzer measures a stable concentration, record 30 seconds of sampled data. Calculate the arithmetic mean of these data points.

(13) Reroute the flow path to bypass the nonmethane cutter, introduce the CH_4 analytical gas mixture, and repeat the steps in paragraphs (e)(11) and (12) of this section.

(14) Divide the mean CH_4 concentration measured through the nonmethane cutter by the mean CH_4 concentration measured after bypassing the nonmethane cutter. The result is the CH_4 penetration fraction, $PF_{CH4[NMC-FID]}$. Use this penetration fraction according to § 1065.660(b)(2)(iii), § 1065.660(c)(1)(iii), or § 1065.665, as applicable.

[73 FR 37310, June 30, 2008, as amended at 74 FR 56513, Oct. 30, 2009]

NO_X AND N_2O MEASUREMENTS

§ 1065.370 CLD CO_2 and H_2O quench verification.

(a) *Scope and frequency.* If you use a CLD analyzer to measure NO_X, verify the amount of H_2O and CO_2 quench after installing the CLD analyzer and after major maintenance.

(b) *Measurement principles.* H_2O and CO_2 can negatively interfere with a CLD's NO_X response by collisional quenching, which inhibits the chemiluminescent reaction that a CLD utilizes to detect NO_X. This procedure

and the calculations in § 1065.675 determine quench and scale the quench results to the maximum mole fraction of H_2O and the maximum CO_2 concentration expected during emission testing. If the CLD analyzer uses quench compensation algorithms that utilize H_2O and/or CO_2 measurement instruments, evaluate quench with these instruments active and evaluate quench with the compensation algorithms applied.

(c) *System requirements.* A CLD analyzer must have a combined H_2O and CO_2 quench of ± 2% or less, though we strongly recommend a quench of ± 1% or less. Combined quench is the sum of the CO_2 quench determined as described in paragraph (d) of this section, plus the H_2O quench determined in paragraph (e) of this section.

(d) *CO_2 quench verification procedure.* Use the following method to determine CO_2 quench by using a gas divider that blends binary span gases with zero gas as the diluent and meets the specifications in § 1065.248, or use good engineering judgment to develop a different protocol:

(1) Use PTFE or stainless steel tubing to make necessary connections.

(2) Configure the gas divider such that nearly equal amounts of the span and diluent gases are blended with each other.

(3) If the CLD analyzer has an operating mode in which it detects NO-only, as opposed to total NO_X, operate the CLD analyzer in the NO-only operating mode.

(4) Use a CO_2 span gas that meets the specifications of § 1065.750 and a concentration that is approximately twice the maximum CO_2 concentration expected during emission testing.

(5) Use an NO span gas that meets the specifications of § 1065.750 and a concentration that is approximately twice the maximum NO concentration expected during emission testing.

(6) Zero and span the CLD analyzer. Span the CLD analyzer with the NO span gas from paragraph (d)(5) of this section through the gas divider. Connect the NO span gas to the span port of the gas divider; connect a zero gas to the diluent port of the gas divider; use the same nominal blend ratio selected in paragraph (d)(2) of this section; and use the gas divider's output concentration of NO to span the CLD analyzer. Apply gas property corrections as necessary to ensure accurate gas division.

(7) Connect the CO_2 span gas to the span port of the gas divider.

(8) Connect the NO span gas to the diluent port of the gas divider.

(9) While flowing NO and CO_2 through the gas divider, stabilize the output of the gas divider. Determine the CO_2 concentration from the gas divider output, applying gas property correction as necessary to ensure accurate gas division. Record this concentration, x_{CO2act}, and use it in the quench verification calculations in § 1065.675. Alternatively, you may use a simple gas blending device and use an NDIR to determine this CO_2 concentration. If you use an NDIR, it must meet the requirements of this part for laboratory testing and you must span it with the CO_2 span gas from paragraph (d)(4) of this section.

(10) Measure the NO concentration downstream of the gas divider with the CLD analyzer. Allow time for the analyzer response to stabilize. Stabilization time may include time to purge the transfer line and to account for analyzer response. While the analyzer measures the sample's concentration, record the analyzer's output for 30 seconds. Calculate the arithmetic mean concentration from these data, x_{NOmeas}. Record x_{NOmeas}, and use it in the quench verification calculations in § 1065.675.

(11) Calculate the actual NO concentration at the gas divider's outlet, x_{NOact}, based on the span gas concentrations and x_{CO2act} according to Equation 1065.675–2. Use the calculated value in the quench verification calculations in Equation 1065.675–1.

(12) Use the values recorded according to this paragraph (d) and paragraph (e) of this section to calculate quench as described in § 1065.675.

(e) *H_2O quench verification procedure.* Use the following method to determine H_2O quench, or use good engineering judgment to develop a different protocol:

(1) Use PTFE or stainless steel tubing to make necessary connections.

(2) If the CLD analyzer has an operating mode in which it detects NO-only, as opposed to total NO_X, operate the CLD analyzer in the NO-only operating mode.

(3) Use an NO span gas that meets the specifications of § 1065.750 and a concentration that is near the maximum concentration expected during emission testing.

(4) Zero and span the CLD analyzer. Span the CLD analyzer with the NO span gas from paragraph (e)(3) of this section, record the span gas concentration as x_{NOdry}, and use it in the quench verification calculations in § 1065.675.

(5) Humidify the NO span gas by bubbling it through distilled water in a sealed vessel. If the humidified NO span gas sample does not pass through a sample dryer for this verification test, control the vessel temperature to generate an H_2O level approximately equal to the maximum mole fraction of H_2O expected during emission testing. If the humidified NO span gas sample does not pass through a sample dryer, the quench verification calculations in § 1065.675 scale the measured H_2O quench to the highest mole fraction of H_2O expected during emission testing. If the humidified NO span gas sample passes through a dryer for this verification test, control the vessel temperature to generate an H_2O level at least as high as the level determined in § 1065.145(e)(2). For this case, the quench verification calculations in § 1065.675 do not scale the measured H_2O quench.

(6) Introduce the humidified NO test gas into the sample system. You may introduce it upstream or downstream of any sample dryer that is used during emission testing. Note that the sample dryer must meet the sample dryer verification check in § 1065.342.

(7) Measure the mole fraction of H_2O in the humidified NO span gas downstream of the sample dryer, $x_{H2Omeas}$. We recommend that you measure xH_{2Omeas} as close as possible to the CLD analyzer inlet. You may calculate $x_{H2Omeas}$ from measurements of dew point, T_{dew}, and absolute pressure, $p$total.

(8) Use good engineering judgment to prevent condensation in the transfer lines, fittings, or valves from the point where $x_{H2Omeas}$ is measured to the analyzer. We recommend that you design your system so the wall temperatures in the transfer lines, fittings, and valves from the point where $x_{H2Omeas}$ is measured to the analyzer are at least 5 °C above the local sample gas dew point.

(9) Measure the humidified NO span gas concentration with the CLD analyzer. Allow time for the analyzer response to stabilize. Stabilization time may include time to purge the transfer line and to account for analyzer response. While the analyzer measures the sample's concentration, record the analyzer's output for 30 seconds. Calculate the arithmetic mean of these data, x_{NOwet}. Record x_{NOwet} and use it in the quench verification calculations in § 1065.675.

(f) *Corrective action*. If the sum of the H_2O quench plus the CO_2 quench is less than −2% or greater than +2%, take corrective action by repairing or replacing the analyzer. Before running emission tests, verify that the corrective action successfully restored the analyzer to proper functioning.

(g) *Exceptions*. The following exceptions apply:

(1) You may omit this verification if you can show by engineering analysis that for your NO_X sampling system and your emission calculation procedures, the combined CO_2 and H_2O interference for your NO_X CLD analyzer always affects your brake-specific NO_X emission results within no more than ±1.0% of the applicable NO_X standard. If you certify to a combined emission standard (such as a NO_X + NMHC standard), scale your NO_X results to the combined standard based on the measured results (after incorporating deterioration factors, if applicable). For example, if your final NO_X + NMHC value is half of the emission standard, double the NO_X result to estimate the level of NO_X emissions corresponding to the applicable standard.

(2) You may use a NO_X CLD analyzer that you determine does not meet this verification, as long as you try to correct the problem and the measurement deficiency does not adversely affect your ability to show that engines comply with all applicable emission standards.

[73 FR 59328, Oct. 8, 2008, as amended at 73 FR 73789, Dec. 4, 2008; 75 FR 23041, Apr. 30, 2010]

§ 1065.372 NDUV analyzer HC and H_2O interference verification.

(a) *Scope and frequency.* If you measure NO_X using an NDUV analyzer, verify the amount of H_2O and hydrocarbon interference after initial analyzer installation and after major maintenance.

(b) *Measurement principles.* Hydrocarbons and H_2O can positively interfere with an NDUV analyzer by causing a response similar to NO_X. If the NDUV analyzer uses compensation algorithms that utilize measurements of other gases to meet this interference verification, simultaneously conduct such measurements to test the algorithms during the analyzer interference verification.

(c) *System requirements.* A NO_X NDUV analyzer must have combined H_2O and HC interference within ±2% of the flow-weighted mean concentration of NO_X expected at the standard, though we strongly recommend keeping interference within ±1%.

(d) *Procedure.* Perform the interference verification as follows:

(1) Start, operate, zero, and span the NO_X NDUV analyzer according to the instrument manufacturer's instructions.

(2) We recommend that you extract engine exhaust to perform this verification. Use a CLD that meets the specifications of subpart C of this part to quantify NO_X in the exhaust. Use the CLD response as the reference value. Also measure HC in the exhaust with a FID analyzer that meets the specifications of subpart C of this part. Use the FID response as the reference hydrocarbon value.

(3) Upstream of any sample dryer, if one is used during testing, introduce the engine exhaust to the NDUV analyzer.

(4) Allow time for the analyzer response to stabilize. Stabilization time may include time to purge the transfer line and to account for analyzer response.

(5) While all analyzers measure the sample's concentration, record 30 seconds of sampled data, and calculate the arithmetic means for the three analyzers.

(6) Subtract the CLD mean from the NDUV mean.

(7) Multiply this difference by the ratio of the flow-weighted mean HC concentration expected at the standard to the HC concentration measured during the verification. The analyzer meets the interference verification of this section if this result is within ±2% of the NO_X concentration expected at the standard.

(e) *Exceptions.* The following exceptions apply:

(1) You may omit this verification if you can show by engineering analysis that for your NO_X sampling system and your emission calculations procedures, the combined HC and H_2O interference for your NO_X NDUV analyzer always affects your brake-specific NO_X emission results by less than 0.5% of the applicable NO_X standard.

[70 FR 40516, July 13, 2005, as amended at 73 FR 37312, June 30, 2008]

§ 1065.375 Interference verification for N_2O analyzers.

(a) *Scope and frequency.* See § 1065.275 to determine whether you need to verify the amount of interference after initial analyzer installation and after major maintenance.

(b) *Measurement principles.* Interference gasses can positively interfere with certain analyzers by causing a response similar to N_2O. If the analyzer uses compensation algorithms that utilize measurements of other gases to meet this interference verification, simultaneously conduct these other measurements to test the compensation algorithms during the analyzer interference verification.

(c) *System requirements.* Analyzers must have combined interference that is within (0.0 ± 1.0) μmol/mol. We strongly recommend a lower interference that is within (0.0 ± 0.5) μmol/mol.

(d) *Procedure.* Perform the interference verification as follows:

(1) Start, operate, zero, and span the N_2O analyzer as you would before an emission test. If the sample is passed through a dryer during emission testing, you may run this verification test with the dryer if it meets the requirements of § 1065.342. Operate the dryer at the same conditions as you will for an emission test. You may also run this

verification test without the sample dryer.

(2) Create a humidified test gas by bubbling a multi component span gas that incorporates the target interference species and meets the specifications in § 1065.750 through distilled water in a sealed vessel. If the sample is not passed through a dryer during emission testing, control the vessel temperature to generate an H_2O level at least as high as the maximum expected during emission testing. If the sample is passed through a dryer during emission testing, control the vessel temperature to generate an H_2O level at least as high as the level determined in § 1065.145(e)(2) for that dryer. Use interference span gas concentrations that are at least as high as the maximum expected during testing.

(3) Introduce the humidified interference test gas into the sample system. You may introduce it downstream of any sample dryer, if one is used during testing.

(4) If the sample is not passed through a dryer during this verification test, measure the water mole fraction, x_{H2O}, of the humidified interference test gas as close as possible to the inlet of the analyzer. For example, measure dewpoint, T_{dew}, and absolute pressure, p_{total}, to calculate x_{H2O}. Verify that the water content meets the requirement in paragraph (d)(2) of this section. If the sample is passed through a dryer during this verification test, you must verify that the water content of the humidified test gas downstream of the vessel meets the requirement in paragraph (d)(2) of this section based on either direct measurement of the water content (e.g., dewpoint and pressure) or an estimate based on the vessel pressure and temperature. Use good engineering judgment to estimate the water content. For example, you may use previous direct measurements of water content to verify the vessel's level of saturation.

(5) If a sample dryer is not used in this verification test, use good engineering judgment to prevent condensation in the transfer lines, fittings, or valves from the point where x_{H2O} is measured to the analyzer. We recommend that you design your system so that the wall temperatures in the transfer lines, fittings, and valves from the point where x_{H2O} is measured to the analyzer are at least 5 °C above the local sample gas dewpoint.

(6) Allow time for the analyzer response to stabilize. Stabilization time may include time to purge the transfer line and to account for analyzer response.

(7) While the analyzer measures the sample's concentration, record its output for 30 seconds. Calculate the arithmetic mean of this data.

(8) The analyzer meets the interference verification if the result of paragraph (d)(7) of this section meets the tolerance in paragraph (c) of this section.

(9) You may also run interference procedures separately for individual interference gases. If the interference gas levels used are higher than the maximum levels expected during testing, you may scale down each observed interference value by multiplying the observed interference by the ratio of the maximum expected concentration value to the actual value used during this procedure. You may run separate interference concentrations of H_2O (down to 0.025 mol/mol H_2O content) that are lower than the maximum levels expected during testing, but you must scale up the observed H_2O interference by multiplying the observed interference by the ratio of the maximum expected H_2O concentration value to the actual value used during this procedure. The sum of the scaled interference values must meet the tolerance specified in paragraph (c) of this section.

[74 FR 56515, Oct. 30, 2009]

§ 1065.376 Chiller NO_2 penetration.

(a) *Scope and frequency*. If you use a chiller to dry a sample upstream of a NO_X measurement instrument, but you don't use an NO_2-to-NO converter upstream of the chiller, you must perform this verification for chiller NO_2 penetration. Perform this verification after initial installation and after major maintenance.

(b) *Measurement principles*. A chiller removes water, which can otherwise interfere with a NO_X measurement. However, liquid water remaining in an

improperly designed chiller can remove NO_2 from the sample. If a chiller is used without an NO_2-to-NO converter upstream, it could remove NO_2 from the sample prior NO_X measurement.

(c) *System requirements.* A chiller must allow for measuring at least 95% of the total NO_2 at the maximum expected concentration of NO_2.

(d) *Procedure.* Use the following procedure to verify chiller performance:

(1) *Instrument setup.* Follow the analyzer and chiller manufacturers' start-up and operating instructions. Adjust the analyzer and chiller as needed to optimize performance.

(2) *Equipment setup and data collection.* (i) Zero and span the total NO_X gas analyzer(s) as you would before emission testing.

(ii) Select an NO_2 calibration gas, balance gas of dry air, that has an NO_2 concentration within ±5% of the maximum NO_2 concentration expected during testing.

(iii) Overflow this calibration gas at the gas sampling system's probe or overflow fitting. Allow for stabilization of the total NO_X response, accounting only for transport delays and instrument response.

(iv) Calculate the mean of 30 seconds of recorded total NO_X data and record this value as $x_{NOXref.}$

(v) Stop flowing the NO_2 calibration gas.

(vi) Next saturate the sampling system by overflowing a dewpoint generator's output, set at a dewpoint of 50 °C, to the gas sampling system's probe or overflow fitting. Sample the dewpoint generator's output through the sampling system and chiller for at least 10 minutes until the chiller is expected to be removing a constant rate of water.

(vii) Immediately switch back to overflowing the NO_2 calibration gas used to establish $x_{NOxref.}$ Allow for stabilization of the total NO_X response, accounting only for transport delays and instrument response. Calculate the mean of 30 seconds of recorded total NO_X data and record this value as $x_{NOxmeas}$.

(viii) Correct $x_{NOxmeas}$ to x_{NOxdry} based upon the residual water vapor that passed through the chiller at the chiller's outlet temperature and pressure.

(3) *Performance evaluation.* If x_{NOxdry} is less than 95% of x_{NOxref}, repair or replace the chiller.

(e) *Exceptions.* The following exceptions apply:

(1) You may omit this verification if you can show by engineering analysis that for your NO_X sampling system and your emission calculations procedures, the chiller always affects your brake-specific NO_X emission results by less than 0.5% of the applicable NO_X standard.

(2) You may use a chiller that you determine does not meet this verification, as long as you try to correct the problem and the measurement deficiency does not adversely affect your ability to show that engines comply with all applicable emission standards.

[73 FR 37312, June 30, 2008]

§ 1065.378 NO_2-to-NO converter conversion verification.

(a) *Scope and frequency.* If you use an analyzer that measures only NO to determine NO_X, you must use an NO_2-to-NO converter upstream of the analyzer. Perform this verification after installing the converter, after major maintenance and within 35 days before an emission test. This verification must be repeated at this frequency to verify that the catalytic activity of the NO_2-to-NO converter has not deteriorated.

(b) *Measurement principles.* An NO_2-to-NO converter allows an analyzer that measures only NO to determine total NO_X by converting the NO_2 in exhaust to NO.

(c) *System requirements.* An NO_2-to-NO converter must allow for measuring at least 95% of the total NO_2 at the maximum expected concentration of NO_2.

(d) *Procedure.* Use the following procedure to verify the performance of a NO_2-to-NO converter:

(1) *Instrument setup.* Follow the analyzer and NO_2-to-NO converter manufacturers' start-up and operating instructions. Adjust the analyzer and converter as needed to optimize performance.

(2) *Equipment setup.* Connect an ozonator's inlet to a zero-air or oxygen source and connect its outlet to one port of a three-way tee fitting. Connect an NO span gas to another port, and

connect the NO_2-to-NO converter inlet to the last port.

(3) *Adjustments and data collection.* Perform this check as follows:

(i) Set ozonator air off, turn ozonator power off, and set the analyzer to NO mode. Allow for stabilization, accounting only for transport delays and instrument response.

(ii) Use an NO concentration that is representative of the peak total NO_X concentration expected during testing. The NO_2 content of the gas mixture shall be less than 5% of the NO concentration. Record the concentration of NO by calculating the mean of 30 seconds of sampled data from the analyzer and record this value as x_{NOref}.

(iii) Turn on the ozonator O_2 supply and adjust the O_2 flow rate so the NO indicated by the analyzer is about 10 percent less than x_{NOref}. Record the concentration of NO by calculating the mean of 30 seconds of sampled data from the analyzer and record this value as $x_{NO+O2mix}$.

(iv) Switch the ozonator on and adjust the ozone generation rate so the NO measured by the analyzer is 20 percent of x_{NOref}, while maintaining at least 10 percent unreacted NO. Record the concentration of NO by calculating the mean of 30 seconds of sampled data from the analyzer and record this value as x_{NOmeas}.

(v) Switch the NO_X analyzer to NO_X mode and measure total NO_X. Record the concentration of NO_X by calculating the mean of 30 seconds of sampled data from the analyzer and record this value as $x_{NOxmeas}$.

(vi) Switch off the ozonator but maintain gas flow through the system. The NO_X analyzer will indicate the NO_X in the NO + O_2 mixture. Record the concentration of NO_X by calculating the mean of 30 seconds of sampled data from the analyzer and record this value as $x_{NOx+O2mix}$.

(vii) Turn off the ozonator O_2 supply. The NO_X analyzer will indicate the NO_X in the original NO-in-N_2 mixture. Record the concentration of NO_X by calculating the mean of 30 seconds of sampled data from the analyzer and record this value as x_{NOxref}. This value should be no more than 5 percent above the x_{NOref} value.

(4) *Performance evaluation.* Calculate the efficiency of the NO_X converter by substituting the concentrations obtained into the following equation:

$$efficiency = \left(1 + \frac{x_{NOxmeas} - x_{NOx+O2mix}}{x_{NO+O2mix} - x_{NOmeas}}\right) \cdot 100\%$$

(5) If the result is less than 95%, repair or replace the NO_2-to-NO converter.

(e) *Exceptions.* The following exceptions apply:

(1) You may omit this verification if you can show by engineering analysis that for your NO_X sampling system and your emission calculations procedures, the converter always affects your brake-specific NO_X emission results by less than 0.5% of the applicable NO_X standard.

[70 FR 40516, July 13, 2005, as amended at 73 FR 37313, June 30, 2008; 73 FR 59330, Oct. 8, 2008]

PM MEASUREMENTS

§ 1065.390 PM balance verifications and weighing process verification.

(a) *Scope and frequency.* This section describes three verifications.

(1) Independent verification of PM balance performance within 370 days before weighing any filter.

(2) Zero and span the balance within 12 h before weighing any filter.

(3) Verify that the mass determination of reference filters before and after a filter weighing session are less than a specified tolerance.

(b) *Independent verification*. Have the balance manufacturer (or a representative approved by the balance manufacturer) verify the balance performance within 370 days of testing.

(c) *Zeroing and spanning*. You must verify balance performance by zeroing and spanning it with at least one calibration weight, and any weights you use must that meet the specifications in §1065.790 to perform this verification.

(1) Use a manual procedure in which you zero the balance and span the balance with at least one calibration weight. If you normally use mean values by repeating the weighing process to improve the accuracy and precision of PM measurements, use the same process to verify balance performance.

(2) You may use an automated procedure to verify balance performance. For example many balances have internal calibration weights that are used automatically to verify balance performance.

(d) *Reference sample weighing*. Verify all mass readings during a weighing session by weighing reference PM sample media (e.g., filters) before and after a weighing session. A weighing session may be as short as desired, but no longer than 80 hours, and may include both pre-test and post-test mass readings. We recommend that weighing sessions be eight hours or less. Successive mass determinations of each reference PM sample media (e.g., filter) must return the same value within ±10 μg or ±10% of the net PM mass expected at the standard (if known), whichever is higher. If successive reference PM sample media (e.g., filter) weighing events fail this criterion, invalidate all individual test media (e.g., filter) mass readings occurring between the successive reference media (e.g., filter) mass determinations. You may reweigh these media (e.g., filter) in another weighing session. If you invalidate a pre-test media (e.g., filter) mass determination, that test interval is void. Perform this verification as follows:

(1) Keep at least two samples of unused PM sample media (e.g., filters) in the PM-stabilization environment. Use these as references. If you collect PM with filters, select unused filters of the same material and size for use as references. You may periodically replace references, using good engineering judgment.

(2) Stabilize references in the PM stabilization environment. Consider references stabilized if they have been in the PM-stabilization environment for a minimum of 30 min, and the PM-stabilization environment has been within the specifications of §1065.190(d) for at least the preceding 60 min.

(3) Exercise the balance several times with a reference sample. We recommend weighing ten samples without recording the values.

(4) Zero and span the balance. Using good engineering judgment, place a test mass such as a calibration weight on the balance, then remove it. After spanning, confirm that the balance returns to a zero reading within the normal stabilization time.

(5) Weigh each of the reference media (e.g., filters) and record their masses. We recommend using substitution weighing as described in §1065.590(j). If you normally use mean values by repeating the weighing process to improve the accuracy and precision of the reference media (e.g., filter) mass, you must use mean values of sample media (e.g., filter) masses.

(6) Record the balance environment dewpoint, ambient temperature, and atmospheric pressure.

(7) Use the recorded ambient conditions to correct results for buoyancy as described in §1065.690. Record the buoyancy-corrected mass of each of the references.

(8) Subtract each reference media's (e.g., filter's) buoyancy-corrected reference mass from its previously measured and recorded buoyancy-corrected mass.

(9) If any of the reference filters' observed mass changes by more than that allowed under this paragraph, you must invalidate all PM mass determinations made since the last successful reference media (*e.g.* filter) mass validation. You may discard reference PM media (*e.g.* filters) if only one of the filter's mass changes by more than the allowable amount and you can positively identify a special cause for that filter's mass change that would

not have affected other in-process filters. Thus, the validation can be considered a success. In this case, you do not have to include the contaminated reference media when determining compliance with paragraph (d)(10) of this section, but the affected reference filter must be immediately discarded and replaced prior to the next weighing session.

(10) If any of the reference masses change by more than that allowed under this paragraph (d), invalidate all PM results that were determined between the two times that the reference masses were determined. If you discarded reference PM sample media according to paragraph (d)(9) of this section, you must still have at least one reference mass difference that meets the criteria in this paragraph (d). Otherwise, you must invalidate all PM results that were determined between the two times that the reference media (e.g., filters) masses were determined.

[73 FR 37313, June 30, 2008, as amended at 75 FR 23042, Apr. 30, 2010; 75 FR 68463, Nov. 8, 2010]

§ 1065.395 Inertial PM balance verifications.

This section describes how to verify the performance of an inertial PM balance.

(a) *Independent verification.* Have the balance manufacturer (or a representative approved by the balance manufacturer) verify the inertial balance performance within 370 days before testing.

(b) *Other verifications.* Perform other verifications using good engineering judgment and instrument manufacturer recommendations.

Subpart E—Engine Selection, Preparation, and Maintenance

§ 1065.401 Test engine selection.

While all engine configurations within a certified engine family must comply with the applicable standards in the standard-setting part, you need not test each configuration for certification.

(a) Select an engine configuration within the engine family for testing, as follows:

(1) Test the engine that we specify, whether we issue general guidance or give you specific instructions.

(2) If we do not tell you which engine to test, follow any instructions in the standard-setting part.

(3) If we do not tell you which engine to test and the standard-setting part does not include specifications for selecting test engines, use good engineering judgment to select the engine configuration within the engine family that is most likely to exceed an emission standard.

(b) In the absence of other information, the following characteristics are appropriate to consider when selecting the engine to test:

(1) Maximum fueling rates.

(2) Maximum loads.

(3) Maximum in-use speeds.

(4) Highest sales volume.

(c) For our testing, we may select any engine configuration within the engine family.

§ 1065.405 Test engine preparation and maintenance.

This part 1065 describes how to test engines for a variety of purposes, including certification testing, production-line testing, and in-use testing. Depending on which type of testing is being conducted, different preparation and maintenance requirements apply for the test engine.

(a) If you are testing an emission-data engine for certification, make sure it is built to represent production engines. This includes governors that you normally install on production engines. Production engines should also be tested with their installed governors. If you do not install governors on production engines, simulate a governor that is representative of a governor that others will install on your production engines.

(b) Testing generally occurs only after the test engine has undergone a stabilization step (or in-use operation). If the engine has not already been stabilized, run the test engine, with all emission control systems operating, long enough to stabilize emission levels. Note that you must generally use the same stabilization procedures for emission-data engines for which you apply the same deterioration factors so

low-hour emission-data engines are consistent with the low-hour engine used to develop the deterioration factor.

(1) Unless otherwise specified in the standard-setting part, you may consider emission levels stable without measurement after 50 h of operation. If the engine needs less operation to stabilize emission levels, record your reasons and the methods for doing this, and give us these records if we ask for them. If the engine will be tested for certification as a low-hour engine, see the standard-setting part for limits on testing engines to establish low-hour emission levels.

(2) You may stabilize emissions from a catalytic exhaust aftertreatment device by operating it on a different engine, consistent with good engineering judgment. Note that good engineering judgment requires that you consider both the purpose of the test and how your stabilization method will affect the development and application of deterioration factors. For example, this method of stabilization is generally not appropriate for production engines. We may also allow you to stabilize emissions from a catalytic exhaust aftertreatment device by operating it on an engine-exhaust simulator.

(c) Record any maintenance, modifications, parts changes, diagnostic or emissions testing and document the need for each event. You must provide this information if we request it.

(d) For accumulating operating hours on your test engines, select engine operation that represents normal in-use operation for the engine family.

(e) If your engine will be used in a vehicle equipped with a canister for storing evaporative hydrocarbons for eventual combustion in the engine and the test sequence involves a cold-start or hot-start duty cycle, attach a canister to the engine before running an emission test. You may omit using an evaporative canister for any hot-stabilized duty cycles. You may request to omit using an evaporative canister during testing if you can show that it would not affect your ability to show compliance with the applicable emission standards. You may operate the engine without an installed canister for service accumulation. Prior to an emission test, use the following steps to attach a canister to your engine:

(1) Use a canister and plumbing arrangement that represents the in-use configuration of the largest capacity canister in all expected applications.

(2) Use a canister that is fully loaded with fuel vapors.

(3) Connect the canister's purge port to the engine.

(4) Plug the canister port that is normally connected to the fuel tank.

[73 FR 37314, June 30, 2008]

§ 1065.410 Maintenance limits for stabilized test engines.

(a) After you stabilize the test engine's emission levels, you may do maintenance as allowed by the standard-setting part. However, you may not do any maintenance based on emission measurements from the test engine (i.e., unscheduled maintenance).

(b) For any critical emission-related maintenance—other than what we specifically allow in the standard-setting part—you must completely test an engine for emissions before and after doing any maintenance that might affect emissions, unless we waive this requirement.

(c) Keep a record of the inspection and update your application to document any changes as a result of the inspection. You may use equipment, instruments, or engineering grade tools to identify bad engine components. Any equipment, instruments, or tools used for scheduled maintenance on emission data engines must be representative of what is planned to be available to dealerships and other service outlets.

(d) If we determine that a part failure, system malfunction, or associated repairs have made the engine's emission controls unrepresentative of production engines, you may no longer use it as an emission-data engine. Also, if your test engine has a major mechanical failure that requires you to take it apart, you may no longer use it as an emission-data engine.

(e) If we determine that a part failure, system malfunction, or associated repairs have made the engine's emission controls unrepresentative of production engines, you may no longer use it as an emission-data. Also, if your

test engine has a major mechanical failure that requires you to take it apart, you may no longer use it as an emission-data engine.

[70 FR 40516, July 13, 2005, as amended at 73 FR 37314, June 30, 2008]

§ 1065.415 Durability demonstration.

If the standard-setting part requires durability testing, you must accumulate service in a way that represents how you expect the engine to operate in use. You may accumulate service hours using an accelerated schedule, such as through continuous operation or by using duty cycles that are more aggressive than in-use operation, subject to any pre-approval requirements established in the applicable standard-setting part.

(a) *Maintenance.* The following limits apply to the maintenance that we allow you to do on an emission-data engine:

(1) You may perform scheduled maintenance that you recommend to operators, but only if it is consistent with the standard-setting part's restrictions.

(2) You may perform additional maintenance only as specified in § 1065.410 or allowed by the standard-setting part.

(b) *Emission measurements.* Perform emission tests following the provisions of the standard setting part and this part, as applicable. Perform emission tests to determine deterioration factors consistent with good engineering judgment. Evenly space any tests between the first and last test points throughout the durability period, unless we approve otherwise.

[70 FR 40516, July 13, 2005, as amended at 73 FR 37315, June 30, 2008]

Subpart F—Performing an Emission Test Over Specified Duty Cycles

§ 1065.501 Overview.

(a) Use the procedures detailed in this subpart to measure engine emissions over a specified duty cycle. Refer to subpart J of this part for field test procedures that describe how to measure emissions during in-use engine operation. This section describes how to:

(1) Map your engine, if applicable, by recording specified speed and torque data, as measured from the engine's primary output shaft.

(2) Transform normalized duty cycles into reference duty cycles for your engine by using an engine map.

(3) Prepare your engine, equipment, and measurement instruments for an emission test.

(4) Perform pre-test procedures to verify proper operation of certain equipment and analyzers.

(5) Record pre-test data.

(6) Start or restart the engine and sampling systems.

(7) Sample emissions throughout the duty cycle.

(8) Record post-test data.

(9) Perform post-test procedures to verify proper operation of certain equipment and analyzers.

(10) Weigh PM samples.

(b) An emission test generally consists of measuring emissions and other parameters while an engine follows one or more duty cycles that are specified in the standard-setting part. There are two general types of duty cycles:

(1) *Transient cycles.* Transient duty cycles are typically specified in the standard-setting part as a second-by-second sequence of speed commands and normalized torque (or power) commands. Operate an engine over a transient cycle such that the speed and torque of the engine's primary output shaft follows the target values. Proportionally sample emissions and other parameters and use the calculations in subpart G of this part to calculate emissions. Start a transient test according to the standard-setting part, as follows:

(i) A cold-start transient cycle where you start to measure emissions just before starting an engine that has not been warmed up.

(ii) A hot-start transient cycle where you start to measure emissions just before starting a warmed-up engine.

(iii) A hot running transient cycle where you start to measure emissions after an engine is started, warmed up, and running.

(2) *Steady-state cycles.* Steady-state duty cycles are typically specified in the standard-setting part as a list of discrete operating points (modes or

notches), where each operating point has one value of a normalized speed command and one value of a normalized torque (or power) command. Ramped-modal cycles for steady-state testing also list test times for each mode and transition times between modes where speed and torque are linearly ramped between modes, even for cycles with % power. Start a steady-state cycle as a hot running test, where you start to measure emissions after an engine is started, warmed up and running. You may run a steady-state duty cycle as a discrete-mode cycle or a ramped-modal cycle, as follows:

(i) *Discrete-mode cycles.* Before emission sampling, stabilize an engine at the first discrete mode. Sample emissions and other parameters for that mode in the same manner as a transient cycle, with the exception that reference speed and torque values are constant. Record mean values for that mode, and then stabilize the engine at the next mode. Continue to sample each mode discretely as separate test intervals and calculate weighted emission results according to the standard-setting part.

(ii) *Ramped-modal cycles.* Perform ramped-modal cycles similar to the way you would perform transient cycles, except that ramped-modal cycles involve mostly steady-state engine operation. Generate a ramped-modal duty cycle as a sequence of second-by-second (1 Hz) reference speed and torque points. Run the ramped-modal duty cycle in the same manner as a transient cycle and use the 1 Hz reference speed and torque values to validate the cycle, even for cycles with % power. Proportionally sample emissions and other parameters during the cycle and use the calculations in subpart G of this part to calculate emissions.

(c) Other subparts in this part identify how to select and prepare an engine for testing (subpart E), how to perform the required engine service accumulation (subpart E), and how to calculate emission results (subpart G).

(d) Subpart J of this part describes how to perform field testing.

[70 FR 40516, July 13, 2005, as amended at 73 FR 37315, June 30, 2008; 75 FR 23042, Apr. 30, 2010]

§ 1065.510 Engine mapping.

(a) *Applicability, scope, and frequency.* An engine map is a data set that consists of a series of paired data points that represent the maximum brake torque versus engine speed, measured at the engine's primary output shaft. Map your engine if the standard-setting part requires engine mapping to generate a duty cycle for your engine configuration. Map your engine while it is connected to a dynamometer or other device that can absorb work output from the engine's primary output shaft according to § 1065.110. Configure any auxiliary work inputs and outputs such as hybrid, turbo-compounding, or thermoelectric systems to represent their in-use configurations, and use the same configuration for emission testing. See Figure 1 of § 1065.210. This may involve configuring initial states of charge and rates and times of auxiliary-work inputs and outputs. We recommend that you contact the Designated Compliance Officer before testing to determine how you should configure any auxiliary-work inputs and outputs. Use the most recent engine map to transform a normalized duty cycle from the standard-setting part to a reference duty cycle specific to your engine. Normalized duty cycles are specified in the standard-setting part. You may update an engine map at any time by repeating the engine-mapping procedure. You must map or re-map an engine before a test if any of the following apply:

(1) If you have not performed an initial engine map.

(2) If the atmospheric pressure near the engine's air inlet is not within ± 5 kPa of the atmospheric pressure recorded at the time of the last engine map.

(3) If the engine or emission-control system has undergone changes that might affect maximum torque performance. This includes changing the configuration of auxiliary work inputs and outputs.

(4) If you capture an incomplete map on your first attempt or you do not complete a map within the specified time tolerance. You may repeat mapping as often as necessary to capture a complete map within the specified time.

(b) *Mapping variable-speed engines.* Map variable-speed engines as follows:

(1) Record the atmospheric pressure.

(2) Warm up the engine by operating it. We recommend operating the engine at any speed and at approximately 75% of its expected maximum power. Continue the warm-up until the engine coolant, block, or head absolute temperature is within ± 2% of its mean value for at least 2 min or until the engine thermostat controls engine temperature.

(3) Operate the engine at its warm idle speed as follows:

(i) For engines with a low-speed governor, set the operator demand to minimum, use the dynamometer or other loading device to target a torque of zero on the engine's primary output shaft, and allow the engine to govern the speed. Measure this warm idle speed; we recommend recording at least 30 values of speed and using the mean of those values.

(ii) For engines without a low-speed governor, operate the engine at warm idle speed and zero torque on the engine's primary output shaft. You may use the dynamometer to target a torque of zero on the engine's primary output shaft, and manipulate the operator demand to control the speed to target the manufacturer-declared value for the lowest engine speed possible with minimum load (also known as manufacturer-declared warm idle speed). You may alternatively use the dynamometer to target the manufacturer-declared warm idle speed and manipulate the operator demand to control the torque on the engine's primary output shaft to zero.

(iii) For variable-speed engines with or without a low-speed governor, if a nonzero idle torque is representative of in-use operation, you may use the dynamometer or operator demand to target the manufacturer-declared idle torque instead of targeting zero torque as specified in paragraphs (b)(3)(i) and (ii) of this section. Control speed as specified in paragraph (b)(3)(i) or (ii) of this section, as applicable. If you use this option for engines with a low-speed governor to measure the warm idle speed with the manufacturer-declared torque at this step, you may use this as the warm-idle speed for cycle generation as specified in paragraph (b)(6) of this section. However, if you identify multiple warm idle torques under paragraph (f)(4)(i) of this section, measure the warm idle speed at only one torque level for this paragraph (b)(3).

(4) Set operator demand to maximum and control engine speed at (95 ± 1) % of its warm idle speed determined above for at least 15 seconds. For engines with reference duty cycles whose lowest speed is greater than warm idle speed, you may start the map at (95 ± 1) % of the lowest reference speed.

(5) Perform one of the following:

(i) For any engine subject only to steady-state duty cycles (*i.e.*, discrete-mode or ramped-modal), you may perform an engine map by using discrete speeds. Select at least 20 evenly spaced setpoints from 95% of warm idle speed to the highest speed above maximum power at which 50% of maximum power occurs. We refer to this 50% speed as the check point speed as described in paragraph (b)(5)(iii) of this section. At each setpoint, stabilize speed and allow torque to stabilize. Record the mean speed and torque at each setpoint. We recommend that you stabilize an engine for at least 15 seconds at each setpoint and record the mean feedback speed and torque of the last (4 to 6) seconds. Use linear interpolation to determine intermediate speeds and torques. Use this series of speeds and torques to generate the power map as described in paragraph (e) of this section.

(ii) For any variable-speed engine, you may perform an engine map by using a continuous sweep of speed by continuing to record the mean feedback speed and torque at 1 Hz or more frequently and increasing speed at a constant rate such that it takes (4 to 6) min to sweep from 95% of warm idle speed to the check point speed as described in paragraph (b)(5)(iii) of this section. Use good engineering judgment to determine when to stop recording data to ensure that the sweep is complete. In most cases, this means that you can stop the sweep at any point after the power falls to 50% of the maximum value. From the series of

mean speed and maximum torque values, use linear interpolation to determine intermediate values. Use this series of speeds and torques to generate the power map as described in paragraph (e) of this section.

(iii) The check point speed of the map is the highest speed above maximum power at which 50% of maximum power occurs. If this speed is unsafe or unachievable (*e.g.*, for ungoverned engines or engines that do not operate at that point), use good engineering judgment to map up to the maximum safe speed or maximum achievable speed. For discrete mapping, if the engine cannot be mapped to the check point speed, make sure the map includes at least 20 points from 95% of warm idle to the maximum mapped speed. For continuous mapping, if the engine cannot be mapped to the check point speed, verify that the sweep time from 95% of warm idle to the maximum mapped speed is (4 to 6) min.

(iv) Note that under §1065.10(c)(1) we may allow you to disregard portions of the map when selecting maximum test speed if the specified procedure would result in a duty cycle that does not represent in-use operation.

(6) For engines with a low-speed governor, if a nonzero idle torque is representative of in-use operation, operate the engine at warm idle with the manufacturer-declared idle torque. Set the operator demand to minimum, use the dynamometer to target the declared idle torque, and allow the engine to govern the speed. Measure this speed and use it as the warm idle speed for cycle generation in §1065.512. We recommend recording at least 30 values of speed and using the mean of those values. If you identify multiple warm idle torques under paragraph (f)(4)(i) of this section, measure the warm idle speed at each torque. You may map the idle governor at multiple load levels and use this map to determine the measured warm idle speed at the declared idle torque(s).

(c) *Negative torque mapping*. If your engine is subject to a reference duty cycle that specifies negative torque values (*i.e.*, engine motoring), generate a motoring map by any of the following procedures:

(1) Multiply the positive torques from your map by −40%. Use linear interpolation to determine intermediate values.

(2) Map the amount of negative torque required to motor the engine by repeating paragraph (b) of this section with minimum operator demand.

(3) Determine the amount of negative torque required to motor the engine at the following two points near the ends of the engine's speed range. Operate the engine at these two points at minimum operator demand. Use linear interpolation to determine intermediate values.

(i) *Low-speed point*. For engines without a low-speed governor, determine the amount of negative torque at warm idle speed. For engines with a low-speed governor, motor the engine above warm idle speed so the governor is inactive and determine the amount of negative torque at that speed.

(ii) *High-speed point*. For engines without a high-speed governor, determine the amount of negative torque at the maximum safe speed or the maximum representative speed. For engines with a high-speed governor, determine the amount of negative torque at a speed at or above n_{hi} per §1065.610(c)(2).

(d) *Mapping constant-speed engines*. For constant-speed engines, generate a map as follows:

(1) Record the atmospheric pressure.

(2) Warm up the engine by operating it. We recommend operating the engine at approximately 75% of the engine's expected maximum power. Continue the warm-up until the engine coolant, block, or head absolute temperature is within ±2% of its mean value for at least 2 min or until the engine thermostat controls engine temperature.

(3) You may operate the engine with a production constant-speed governor or simulate a constant-speed governor by controlling engine speed with an operator demand control system described in §1065.110. Use either isochronous or speed-droop governor operation, as appropriate.

(4) With the governor or simulated governor controlling speed using operator demand, operate the engine at no-load governed speed (at high speed, not low idle) for at least 15 seconds.

(5) Record at 1 Hz the mean of feedback speed and torque. Use the dynamometer to increase torque at a constant rate. Unless the standard-setting part specifies otherwise, complete the map such that it takes (2 to 4) min to sweep from no-load governed speed to the speed below maximum mapped power at which the engine develops 90% of maximum mapped power. You may map your engine to lower speeds. Stop recording after you complete the sweep. Use this series of speeds and torques to generate the power map as described in paragraph (e) of this section.

(e) *Power mapping*. For all engines, create a power-versus-speed map by transforming torque and speed values to corresponding power values. Use the mean values from the recorded map data. Do not use any interpolated values. Multiply each torque by its corresponding speed and apply the appropriate conversion factors to arrive at units of power (kW). Interpolate intermediate power values between these power values, which were calculated from the recorded map data.

(f) *Measured and declared test speeds and torques*. You must select test speeds and torques for cycle generation as required in this paragraph (f). ''Measured'' values are either directly measured during the engine mapping process or they are determined from the engine map. ''Declared'' values are specified by the manufacturer. When both measured and declared values are available, you may use declared test speeds and torques instead of measured speeds and torques if they meet the criteria in this paragraph (f). Otherwise, you must use measured speeds and torques derived from the engine map.

(1) *Measured speeds and torques*. Determine the applicable speeds and torques for the duty cycles you will run:

(i) Measured maximum test speed for variable-speed engines according to § 1065.610.

(ii) Measured maximum test torque for constant-speed engines according to § 1065.610.

(iii) Measured ''A'', ''B'', and ''C'' speeds for variable-speed engines according to § 1065.610.

(iv) Measured intermediate speed for variable-speed engines according to § 1065.610.

(v) For variable-speed engines with a low-speed governor, measure warm idle speed according to § 1065.510(b) and use this speed for cycle generation in § 1065.512. For engines with no low-speed governor, instead use the manufacturer-declared warm idle speed.

(2) *Required declared speeds*. You must declare the lowest engine speed possible with minimum load (*i.e.*, manufacturer-declared warm idle speed). This is applicable only to variable-speed engines with no low-speed governor. For engines with no low-speed governor, the declared warm idle speed is used for cycle generation in § 1065.512. Declare this speed in a way that is representative of in-use operation. For example, if your engine is typically connected to an automatic transmission or a hydrostatic transmission, declare this speed at the idle speed at which your engine operates when the transmission is engaged.

(3) *Optional declared speeds*. You may use declared speeds instead of measured speeds as follows:

(i) You may use a declared value for maximum test speed for variable-speed engines if it is within (97.5 to 102.5)% of the corresponding measured value. You may use a higher declared speed if the length of the ''vector'' at the declared speed is within 2.0% of the length of the ''vector'' at the measured value. The term vector refers to the square root of the sum of normalized engine speed squared and the normalized full-load power (at that speed) squared, consistent with the calculations in § 1065.610.

(ii) You may use a declared value for intermediate, ''A'', ''B'', or ''C'' speeds for steady-state tests if the declared value is within (97.5 to 102.5)% of the corresponding measured value.

(4) *Required declared torques*. If a nonzero idle or minimum torque is representative of in-use operation, you must declare the appropriate torque as follows:

(i) For variable-speed engines, declare a warm idle torque that is representative of in-use operation. For example, if your engine is typically connected to an automatic transmission or

a hydrostatic transmission, declare the torque that occurs at the idle speed at which your engine operates when the transmission is engaged. Use this value for cycle generation. You may use multiple warm idle torques and associated idle speeds in cycle generation for representative testing. For example, for cycles that start the engine and begin with idle, you may start a cycle in idle with the transmission in neutral with zero torque and later switch to a different idle with the transmission in drive with the Curb-Idle Transmission Torque (CITT). For variable-speed engines intended primarily for propulsion of a vehicle with an automatic transmission where that engine is subject to a transient duty cycle with idle operation, you must declare a CITT. You must specify a CITT based on typical applications at the mean of the range of idle speeds you specify at stabilized temperature conditions.

(ii) For constant-speed engines, declare a warm minimum torque that is representative of in-use operation. For example, if your engine is typically connected to a machine that does not operate below a certain minimum torque, declare this torque and use it for cycle generation.

(5) *Optional declared torques.* For constant-speed engines you may declare a maximum test torque. You may use the declared value for cycle generation if it is within (95 to 100)% of the measured value.

(g) *Other mapping procedures.* You may use other mapping procedures if you believe the procedures specified in this section are unsafe or unrepresentative for your engine. Any alternate techniques you use must satisfy the intent of the specified mapping procedures, which is to determine the maximum available torque at all engine speeds that occur during a duty cycle. Identify any deviations from this section's mapping procedures when you submit data to us.

[73 FR 37315, June 30, 2008, as amended at 73 FR 59330, Oct. 8, 2008; 75 FR 23042, Apr. 30, 2010]

§ 1065.512 Duty cycle generation.

(a) Generate duty cycles according to this section if the standard-setting part requires engine mapping to generate a duty cycle for your engine configuration. The standard-setting part generally defines applicable duty cycles in a normalized format. A normalized duty cycle consists of a sequence of paired values for speed and torque or for speed and power.

(b) Transform normalized values of speed, torque, and power using the following conventions:

(1) *Engine speed for variable-speed engines.* For variable-speed engines, normalized speed may be expressed as a percentage between warm idle speed, f_{nidle}, and maximum test speed, f_{ntest}, or speed may be expressed by referring to a defined speed by name, such as ''warm idle,'' ''intermediate speed,'' or ''A,'' ''B,'' or ''C'' speed. Section 1065.610 describes how to transform these normalized values into a sequence of reference speeds, f_{nref}. Running duty cycles with negative or small normalized speed values near warm idle speed may cause low-speed idle governors to activate and the engine torque to exceed the reference torque even though the operator demand is at a minimum. In such cases, we recommend controlling the dynamometer so it gives priority to follow the reference torque instead of the reference speed and let the engine govern the speed. Note that the cycle-validation criteria in § 1065.514 allow an engine to govern itself. This allowance permits you to test engines with enhanced-idle devices and to simulate the effects of transmissions such as automatic transmissions. For example, an enhanced-idle device might be an idle speed value that is normally commanded only under cold-start conditions to quickly warm up the engine and aftertreatment devices. In this case, negative and very low normalized speeds will generate reference speeds below this higher enhanced idle speed and we recommend controlling the dynamometer so it gives priority to follow the reference torque, controlling the operator demand so it gives priority to follow reference speed and let the engine govern the speed when the operator demand is at minimum.

(2) *Engine torque for variable-speed engines.* For variable-speed engines, normalized torque is expressed as a percentage of the mapped torque at the

corresponding reference speed. Section 1065.610 describes how to transform normalized torques into a sequence of reference torques, T_{ref}. Section 1065.610 also describes special requirements for modifying transient duty cycles for variable-speed engines intended primarily for propulsion of a vehicle with an automatic transmission. Section 1065.610 also describes under what conditions you may command T_{ref} greater than the reference torque you calculated from a normalized duty cycle. This provision permits you to command T_{ref} values that are limited by a declared minimum torque. For any negative torque commands, command minimum operator demand and use the dynamometer to control engine speed to the reference speed, but if reference speed is so low that the idle governor activates, we recommend using the dynamometer to control torque to zero, CITT, or a declared minimum torque as appropriate. Note that you may omit power and torque points during motoring from the cycle-validation criteria in § 1065.514. Also, use the maximum mapped torque at the minimum mapped speed as the maximum torque for any reference speed at or below the minimum mapped speed.

(3) *Engine torque for constant-speed engines.* For constant-speed engines, normalized torque is expressed as a percentage of maximum test torque, T_{test}. Section 1065.610 describes how to transform normalized torques into a sequence of reference torques, T_{ref}. Section 1065.610 also describes under what conditions you may command T_{ref} greater than the reference torque you calculated from the normalized duty cycle. This provision permits you to command T_{ref} values that are limited by a declared minimum torque.

(4) *Engine power.* For all engines, normalized power is expressed as a percentage of mapped power at maximum test speed, f_{ntest}, unless otherwise specified by the standard-setting part. Section 1065.610 describes how to transform these normalized values into a sequence of reference powers, P_{ref}. Convert these reference powers to corresponding torques for operator demand and dynamometer control. Use the reference speed associated with each reference power point for this conversion. As with cycles specified with % torque, issue torque commands more frequently and linearly interpolate between these reference torque values generated from cycles with % power.

(5) *Ramped-modal cycles.* For ramped modal cycles, generate reference speed and torque values at 1 Hz and use this sequence of points to run the cycle and validate it in the same manner as with a transient cycle. During the transition between modes, linearly ramp the denormalized reference speed and torque values between modes to generate reference points at 1 Hz. Do not linearly ramp the normalized reference torque values between modes and then denormalize them. Do not linearly ramp normalized or denormalized reference power points. These cases will produce nonlinear torque ramps in the denormalized reference torques. If the speed and torque ramp runs through a point above the engine's torque curve, continue to command the reference torques and allow the operator demand to go to maximum. Note that you may omit power and either torque or speed points from the cycle-validation criteria under these conditions as specified in § 1065.514.

(c) For variable-speed engines, command reference speeds and torques sequentially to perform a duty cycle. Issue speed and torque commands at a frequency of at least 5 Hz for transient cycles and at least 1 Hz for steady-state cycles (*i.e.*, discrete-mode and ramped-modal). Linearly interpolate between the 1 Hz reference values specified in the standard-setting part to determine more frequently issued reference speeds and torques. During an emission test, record the feedback speeds and torques at a frequency of at least 5 Hz for transient cycles and at least 1 Hz for steady-state cycles. For transient cycles, you may record the feedback speeds and torques at lower frequencies (as low as 1 Hz) if you record the average value over the time interval between recorded values. Calculate the average values based on feedback values updated at a frequency of at least 5 Hz. Use these recorded values to calculate cycle-validation statistics and total work.

(d) For constant-speed engines, operate the engine with the same production governor you used to map the engine in § 1065.510 or simulate the in-use operation of a governor the same way you simulated it to map the engine in § 1065.510. Command reference torque values sequentially to perform a duty cycle. Issue torque commands at a frequency of at least 5 Hz for transient cycles and at least 1 Hz for steady-state cycles (*i.e.*, discrete-mode, ramped-modal). Linearly interpolate between the 1 Hz reference values specified in the standard-setting part to determine more frequently issued reference torque values. During an emission test, record the feedback speeds and torques at a frequency of at least 5 Hz for transient cycles and at least 1 Hz for steady-state cycles. For transient cycles, you may record the feedback speeds and torques at lower frequencies (as low as 1 Hz) if you record the average value over the time interval between recorded values. Calculate the average values based on feedback values updated at a frequency of at least 5 Hz. Use these recorded values to calculate cycle-validation statistics and total work.

(e) You may perform practice duty cycles with the test engine to optimize operator demand and dynamometer controls to meet the cycle-validation criteria specified in § 1065.514.

[73 FR 37317, June 30, 2008]

§ 1065.514 Cycle-validation criteria for operation over specified duty cycles.

Validate the execution of your duty cycle according to this section unless the standard-setting part specifies otherwise. This section describes how to determine if the engine's operation during the test adequately matched the reference duty cycle. This section applies only to speed, torque, and power from the engine's primary output shaft. Other work inputs and outputs are not subject to cycle-validation criteria. You must compare the original reference duty cycle points generated as described in § 1065.512 to the corresponding feedback values recorded during the test. You may compare reference duty cycle points recorded during the test to the corresponding feedback values recorded during the test as long as the recorded reference values match the original points generated in § 1065.512. The number of points in the validation regression are based on the number of points in the original reference duty cycle generated in § 1065.512. For example if the original cycle has 1199 reference points at 1 Hz, then the regression will have up to 1199 pairs of reference and feedback values at the corresponding moments in the test. The feedback speed and torque signals may be filtered—either in real-time while the test is run or afterward in the analysis program. Any filtering that is used on the feedback signals used for cycle validation must also be used for calculating work. Feedback signals for control loops may use different filtering.

(a) *Testing performed by EPA.* Our tests must meet the specifications of paragraph (f) of this section, unless we determine that failing to meet the specifications is related to engine performance rather than to shortcomings of the dynamometer or other laboratory equipment.

(b) *Testing performed by manufacturers.* Emission tests that meet the specifications of paragraph (f) of this section satisfy the standard-setting part's requirements for duty cycles. You may ask to use a dynamometer or other laboratory equipment that cannot meet those specifications. We will approve your request as long as using the alternate equipment does not adversely affect your ability to show compliance with the applicable emission standards.

(c) *Time-alignment.* Because time lag between feedback values and the reference values may bias cycle-validation results, you may advance or delay the entire sequence of feedback engine speed and torque pairs to synchronize them with the reference sequence. If you advance or delay feedback signals for cycle validation, you must make the same adjustment for calculating work. You may use linear interpolation between successive recorded feedback signals to time shift an amount that is a fraction of the recording period.

(d) *Omitting additional points.* Besides engine cranking, you may omit additional points from cycle-validation statistics as described in the following table:

TABLE 1 OF § 1065.514—PERMISSIBLE CRITERIA FOR OMITTING POINTS FROM DUTY-CYCLE REGRESSION STATISTICS

When operator demand is at its . . .	you may omit . . .	if . . .
For reference duty cycles that are specified in terms of speed and torque (f_{nref}, T_{ref})		
minimum	power and torque	T_{ref} < 0% (motoring).
minimum	power and speed	f_{nref} = 0% (idle speed) and T_{ref} = 0% (idle torque) and $T_{ref} - (2\% \cdot T_{max\ mapped}) < T < T_{ref} + (2\% \cdot T_{max\ mapped})$.
minimum	power and either torque or speed.	$f_n > f_{nref}$ or $T > T_{ref}$ but not if $f_n > (f_{nref} \cdot 102\%)$ and $T > T_{ref} \pm (2\% \cdot T_{max\ mapped})$.
maximum	power and either torque or speed.	$f_n < f_{nref}$ or $T < T_{ref}$ but not if $f_n < (f_{nref} \cdot 98\%)$ and $T < T_{ref} - (2\% \cdot T_{max\ mapped})$.
For reference duty cycles that are specified in terms of speed and power (f_{nref}, P_{ref})		
minimum	power and torque	P_{ref} < 0% (motoring).
minimum	power and speed	f_{nref} = 0% (idle speed) and P_{ref} = 0% (idle power) and $P_{ref} - (2\% \cdot P_{max\ mapped}) < P < P_{ref} + (2\% \cdot P_{max\ mapped})$.
minimum	power and either torque or speed.	$f_n > f_{nref}$ or $P > P_{ref}$ but not if $f_n > (f_{nref} \cdot 102\%)$ and $P > P_{ref} + (2\% \cdot P_{max\ mapped})$.
maximum	power and either torque or speed.	$f_n < f_{nref}$ or $P < P_{ref}$ but not if $f_n < (f_{nref} \cdot 98\%)$ and $P < P_{ref} - (2\% \cdot P_{max\ mapped})$.

(e) *Statistical parameters.* Use the remaining points to calculate regression statistics described in § 1065.602. Round calculated regression statistics to the same number of significant digits as the criteria to which they are compared. Refer to Table 2 of § 1065.514 for the default criteria and refer to the standard-setting part to determine if there are other criteria for your engine. Calculate the following regression statistics:

(1) Slopes for feedback speed, a_{1fn}, feedback torque, a_{1T}, and feedback power a_{1P}.

(2) Intercepts for feedback speed, a_{0fn}, feedback torque, a_{0T}, and feedback power a_{0P}.

(3) Standard estimates of error for feedback speed, SEE_{fn}, feedback torque, SEE_T, and feedback power SEE_P.

(4) Coefficients of determination for feedback speed, r^2_{fn}, feedback torque, r^2_T, and feedback power r^2_P.

(f) *Cycle-validation criteria.* Unless the standard-setting part specifies otherwise, use the following criteria to validate a duty cycle:

(1) For variable-speed engines, apply all the statistical criteria in Table 2 of this section.

(2) For constant-speed engines, apply only the statistical criteria for torque in Table 2 of this section.

(3) For discrete-mode steady-state testing, apply cycle-validation criteria by treating the sampling periods from the series of test modes as a continuous sampling period, analogous to ramped-modal testing and apply statistical criteria as described in paragraph (f)(1) or (2) of this section.

TABLE 2 OF § 1065.514—DEFAULT STATISTICAL CRITERIA FOR VALIDATING DUTY CYCLES

Parameter	Speed	Torque	Power
Slope, a_1	$0.950 \le a_1 \le 1.030$	$0.830 \le a_1 \le 1.030$	$0.830 \le a_1 \le 1.030$.
Absolute value of intercept, $\lvert a_0 \rvert$.	≤ 10% of warm idle	≤ 2.0% of maximum mapped torque.	≤ 2.0% of maximum mapped power.
Standard error of estimate, *SEE*.	≤ 5.0% of maximum test speed.	≤ 10% of maximum mapped torque.	≤ 10% of maximum mapped power.
Coefficient of determination, r^2	≥ 0.970	≥ 0.850	≥ 0.910.

[73 FR 37318, June 30, 2008, as amended at 73 FR 59330, Oct. 8, 2008; 75 FR 23042, Apr. 30, 2010]

§ 1065.520 Pre-test verification procedures and pre-test data collection.

(a) If your engine must comply with a PM standard, follow the procedures for PM sample preconditioning and tare weighing according to § 1065.590.

(b) Unless the standard-setting part specifies different tolerances, verify at some point before the test that ambient conditions are within the tolerances specified in this paragraph (b). For purposes of this paragraph (b), ''before the test'' means any time from a point just prior to engine starting (excluding engine restarts) to the point at which emission sampling begins.

(1) Ambient temperature of (20 to 30) °C. *See* § 1065.530(j) for circumstances under which ambient temperatures must remain within this range during the test.

(2) Atmospheric pressure of (80.000 to 103.325) kPa and within ±5 kPa of the value recorded at the time of the last engine map. You are not required to verify atmospheric pressure prior to a hot start test interval for testing that also includes a cold start.

(3) Dilution air conditions as specified in § 1065.140, except in cases where you preheat your CVS before a cold start test. We recommend verifying dilution air conditions just prior to the start of each test interval.

(c) You may test engines at any intake-air humidity, and we may test engines at any intake-air humidity.

(d) Verify that auxiliary-work inputs and outputs are configured as they were during engine mapping, as described in § 1065.510(a).

(e) You may perform a final calibration of the speed, torque, and proportional-flow control systems, which may include performing practice duty cycles.

(f) You may perform the following recommended procedure to precondition sampling systems:

(1) Start the engine and use good engineering judgment to bring it to one of the following:

(i) 100% torque at any speed above its peak-torque speed.

(ii) 100% operator demand.

(2) Operate any dilution systems at their expected flow rates. Prevent aqueous condensation in the dilution systems.

(3) Operate any PM sampling systems at their expected flow rates.

(4) Sample PM for at least 10 min using any sample media. You may change sample media during preconditioning. You may discard preconditioning samples without weighing them.

(5) You may purge any gaseous sampling systems during preconditioning.

(6) You may conduct calibrations or verifications on any idle equipment or analyzers during preconditioning.

(7) Proceed with the test sequence described in § 1065.530(a)(1).

(g) Verify the amount of nonmethane contamination in the exhaust and background HC sampling systems within 8 hours before the start of the first test interval of each duty-cycle sequence for laboratory tests. You may verify the contamination of a background HC sampling system by reading the last bag fill and purge using zero gas. For any NMHC measurement system that involves separately measuring methane and subtracting it from a THC measurement, verify the amount of THC contamination using only the THC analyzer response. There is no need to operate any separate methane analyzer for this verification, however you may measure and correct for THC contamination in the CH_4 sample train for the cases where NMHC is determined by subtracting CH_4 from THC, using an NMC as configured in § 1065.365(d), (e), and (f); and the calculations in § 1065.660(b)(2). Perform this verification as follows:

(1) Select the HC analyzer range for measuring the flow-weighted mean concentration expected at the HC standard.

(2) Zero the HC analyzer at the analyzer zero or sample port. Note that FID zero and span balance gases may be any combination of purified air or purified nitrogen that meets the specifications of § 1065.750. We recommend FID analyzer zero and span gases that contain approximately the flow-weighted mean concentration of O_2 expected during testing.

(3) Span the HC analyzer using span gas introduced at the analyzer span or sample port. Span on a carbon number basis of one (C_1). For example, if you use a C_3H_8 span gas of concentration 200 μmol/mol, span the FID to respond with a value of 600 μmol/mol.

(4) Overflow zero gas at the HC probe inlet or into a tee near the probe outlet.

(5) Measure the THC concentration in the sampling and background systems as follows:

(i) For continuous sampling, record the mean THC concentration as overflow zero air flows.

(ii) For batch sampling, fill the sample medium (e.g., bag) and record its mean THC concentration.

(iii) For the background system, record the mean THC concentration of the last fill and purge.

(6) Record this value as the initial THC concentration, $x_{THC[THC-FID]init}$, and use it to correct measured values as described in § 1065.660.

(7) If any of the $x_{THC[THC-FID]init}$ values exceed the greatest of the following values, determine the source of the contamination and take corrective action, such as purging the system during an additional preconditioning cycle or replacing contaminated portions:

(i) 2% of the flow-weighted mean wet, net concentration expected at the HC (THC or NMHC) standard.

(ii) 2% of the flow-weighted mean wet, net concentration of HC (THC or NMHC) measured during testing.

(iii) 2 μmol/mol.

(8) If corrective action does not resolve the deficiency, you may request to use the contaminated system as an alternate procedure under § 1065.10.

[73 FR 37320, June 30, 2008, as amended at 73 FR 59330, Oct. 8, 2008; 75 FR 23043, Apr. 30, 2010]

§ 1065.525 Engine starting, restarting, and shutdown.

(a) Start the engine using one of the following methods:

(1) Start the engine as recommended in the owners manual using a production starter motor or air-start system and either an adequately charged battery, a suitable power supply, or a suitable compressed air source.

(2) Use the dynamometer to start the engine. To do this, motor the engine within ±25% of its typical in-use cranking speed. Stop cranking within 1 second of starting the engine.

(b) If the engine does not start after 15 seconds of cranking, stop cranking and determine why the engine failed to start, unless the owners manual or the service-repair manual describes the longer cranking time as normal.

(c) Respond to engine stalling with the following steps:

(1) If the engine stalls during warm-up before emission sampling begins, restart the engine and continue warm-up.

(2) If the engine stalls during preconditioning before emission sampling begins, restart the engine and restart the preconditioning sequence.

(3) Void the entire test if the engine stalls at any time after emission sampling begins, except as described in § 1065.526. If you do not void the entire test, you must void the individual test mode or test interval in which the engine stalls.

(4) Except as described in paragraph (d) of this section, void the test if the engine stalls at any time after emission sampling begins.

(d) Shut down the engine according to the manufacturer's specifications.

[73 FR 37320, June 30, 2008, as amended at 75 FR 68463, Nov. 8, 2010]

§ 1065.526 Repeating void modes or test intervals.

(a) Test modes and test intervals can be voided because of instrument malfunctions, engine stalling, or emissions exceeding instrument ranges. This section specifies circumstances for which a test mode or test interval can be repeated without repeating the entire test.

(b) This section is intended to result in replicate test modes and test intervals that are identical to what would have occurred if the cause of the voiding had not occurred. It does not allow you to repeat test modes or test intervals in any circumstances that would be inconsistent with good engineering judgment. For example, the procedures specified here for repeating a mode or interval may not apply for certain engines that include hybrid energy storage features or emission controls that

involve physical or chemical storage of pollutants. This section applies for circumstances in which emission concentrations exceed the analyzer range only if it is due to operator error or analyzer malfunction. It does not apply for circumstances in which the emission concentrations exceed the range because they were higher than expected.

(c) If one of the modes of a discrete-mode test is voided as provided in this section, you may void the results for that individual mode and continue the test as follows:

(1) If the engine has stalled or been shut down, restart the engine.

(2) Use good engineering judgment to restart the test sequence using the appropriate steps in § 1065.530(b).

(3) Precondition the engine by operating it at the previous mode for approximately the same amount of time it operated at that mode for the previous emission measurement.

(4) Advance to the mode at which the test was interrupted and continue with the duty cycle as specified in the standard-setting part.

(d) If a transient or ramped-modal cycle test interval is voided as provided in this section, you may repeat the test interval as follows:

(1) Use good engineering judgment to restart (as applicable) and precondition the engine and emission sampling system to the same condition as would apply for normal testing. This may require you to complete the voided test interval. For example, you may generally repeat a hot-start test of a heavy-duty highway engine after completing the voided hot-start test and allowing the engine to soak for 20 minutes.

(2) Complete the remainder of the test according to the provisions in this subpart.

(e) Keep records from the voided test mode or test interval in the same manner as required for unvoided tests, and include a description of the reason for voiding the test mode or test interval.

[75 FR 68463, Nov. 8, 2010]

§ 1065.530 Emission test sequence.

(a) Time the start of testing as follows:

(1) Perform one of the following if you precondition sampling systems as described in § 1065.520(f):

(i) For cold-start duty cycles, shut down the engine. Unless the standard-setting part specifies that you may only perform a natural engine cooldown, you may perform a forced engine cooldown. Use good engineering judgment to set up systems to send cooling air across the engine, to send cool oil through the engine lubrication system, to remove heat from coolant through the engine cooling system, and to remove heat from any exhaust aftertreatment systems. In the case of a forced aftertreatment cooldown, good engineering judgment would indicate that you not start flowing cooling air until the aftertreatment system has cooled below its catalytic activation temperature. For platinum-group metal catalysts, this temperature is about 200 °C. Once the aftertreatment system has naturally cooled below its catalytic activation temperature, good engineering judgment would indicate that you use clean air with a temperature of at least 15 °C, and direct the air through the aftertreatment system in the normal direction of exhaust flow. Do not use any cooling procedure that results in unrepresentative emissions (see § 1065.10(c)(1)). You may start a cold-start duty cycle when the temperatures of an engine's lubricant, coolant, and aftertreatment systems are all between (20 and 30) °C.

(ii) For hot-start emission measurements, shut down the engine. Start the hot-start duty cycle as specified in the standard-setting part.

(iii) For testing that involves hot-stabilized emission measurements, such as any steady-state testing, you may continue to operate the engine at maximum test speed and 100% torque if that is the first operating point. Otherwise, operate the engine at warm idle or the first operating point of the duty cycle. In any case, start the emission test within 10 min after you complete the preconditioning procedure.

(2) If you do not precondition sampling systems, perform one of the following:

(i) For cold-start duty cycles, prepare the engine according to paragraph (a)(1)(i) of this section.

(ii) For hot-start emission measurements, first operate the engine at any speed above peak-torque speed and at (65 to 85)% of maximum mapped power until either the engine coolant, block, or head absolute temperature is within ±2% of its mean value for at least 2 min or until the engine thermostat controls engine temperature. Shut down the engine. Start the duty cycle within 20 min of engine shutdown.

(iii) For testing that involves hot-stabilized emission measurements, bring the engine either to warm idle or the first operating point of the duty cycle. Start the test within 10 min of achieving temperature stability. Determine temperature stability either as the point at which the engine coolant, block, or head absolute temperature is within ±2% of its mean value for at least 2 min, or as the point at which the engine thermostat controls engine temperature.

(b) Take the following steps before emission sampling begins:

(1) For batch sampling, connect clean storage media, such as evacuated bags or tare-weighed filters.

(2) Start all measurement instruments according to the instrument manufacturer's instructions and using good engineering judgment.

(3) Start dilution systems, sample pumps, cooling fans, and the data-collection system.

(4) Pre-heat or pre-cool heat exchangers in the sampling system to within their operating temperature tolerances for a test.

(5) Allow heated or cooled components such as sample lines, filters, chillers, and pumps to stabilize at their operating temperatures.

(6) Verify that there are no significant vacuum-side leaks according to §1065.345.

(7) Adjust the sample flow rates to desired levels, using bypass flow, if desired.

(8) Zero or re-zero any electronic integrating devices, before the start of any test interval.

(9) Select gas analyzer ranges. You may automatically or manually switch gas analyzer ranges during a test only if switching is performed by changing the span over which the digital resolution of the instrument is applied. During a test you may not switch the gains of an analyzer's analog operational amplifier(s).

(10) Zero and span all continuous analyzers using NIST-traceable gases that meet the specifications of §1065.750. Span FID analyzers on a carbon number basis of one (1), C_1. For example, if you use a C_3H_8 span gas of concentration 200 μmol/mol, span the FID to respond with a value of 600 μmol/mol. Span FID analyzers consistent with the determination of their respective response factors, *RF*, and penetration fractions, *PF*, according to §1065.365.

(11) We recommend that you verify gas analyzer responses after zeroing and spanning by sampling a calibration gas that has a concentration near one-half of the span gas concentration. Based on the results and good engineering judgment, you may decide whether or not to re-zero, re-span, or re-calibrate a gas analyzer before starting a test.

(12) If you correct for dilution air background concentrations of engine exhaust constituents, start measuring and recording background concentrations.

(13) Drain any condensate from the intake air system and close any intake air condensate drains that are not normally open during in-use operation.

(c) Start testing as follows:

(1) If an engine is already running and warmed up, and starting is not part of the duty cycle, perform the following for the various duty cycles:

(i) Transient and steady-state ramped-modal cycles. Simultaneously start running the duty cycle, sampling exhaust gases, recording data, and integrating measured values.

(ii) Steady-state discrete-mode cycles. Control the engine operation to match the first mode in the test cycle. This will require controlling engine speed and load, engine load, or other operator demand settings, as specified in the standard-setting part. Follow the instructions in the standard-setting part to determine how long to stabilize engine operation at each mode, how long to sample emissions at each mode, and how to transition between modes.

(2) If engine starting is part of the duty cycle, initiate data logging, sampling of exhaust gases, and integrating measured values before attempting to start the engine. Initiate the duty cycle when the engine starts.

(d) At the end of each test interval, continue to operate all sampling and dilution systems to allow the sampling system's response time to elapse. Then stop all sampling and recording, including the recording of background samples. Finally, stop any integrating devices and indicate the end of the duty cycle in the recorded data.

(e) Shut down the engine if you have completed testing or if it is part of the duty cycle.

(f) If testing involves another duty cycle after a soak period with the engine off, start a timer when the engine shuts down, and repeat the steps in paragraphs (b) through (e) of this section as needed.

(g) Take the following steps after emission sampling is complete:

(1) For any proportional batch sample, such as a bag sample or PM sample, verify that proportional sampling was maintained according to § 1065.545. Void any samples that did not maintain proportional sampling according to § 1065.545.

(2) Place any used PM samples into covered or sealed containers and return them to the PM-stabilization environment. Follow the PM sample post-conditioning and total weighing procedures in § 1065.595.

(3) As soon as practical after the duty cycle is complete, or during the soak period if practical, perform the following:

(i) Zero and span all batch gas analyzers no later than 30 minutes after the duty cycle is complete, or during the soak period if practical.

(ii) Analyze any conventional gaseous batch samples no later than 30 minutes after the duty cycle is complete, or during the soak period if practical.

(iii) Analyze background samples no later than 60 minutes after the duty cycle is complete.

(iv) Analyze non-conventional gaseous batch samples, such as ethanol (NMHCE) as soon as practical using good engineering judgment.

(4) After quantifying exhaust gases, verify drift as follows:

(i) For batch and continuous gas analyzers, record the mean analyzer value after stabilizing a zero gas to the analyzer. Stabilization may include time to purge the analyzer of any sample gas, plus any additional time to account for analyzer response.

(ii) Record the mean analyzer value after stabilizing the span gas to the analyzer. Stabilization may include time to purge the analyzer of any sample gas, plus any additional time to account for analyzer response.

(iii) Use these data to validate and correct for drift as described in § 1065.550.

(h) Unless the standard-setting part specifies otherwise, determine whether or not the test meets the cycle-validation criteria in § 1065.514.

(1) If the criteria void the test, you may retest using the same denormalized duty cycle, or you may re-map the engine, denormalize the reference duty cycle based on the new map and retest the engine using the new denormalized duty cycle.

(2) If the criteria void the test for a constant-speed engine only during commands of maximum test torque, you may do the following:

(i) Determine the first and last feedback speeds at which maximum test torque was commanded.

(ii) If the last speed is greater than or equal to 90% of the first speed, the test is void. You may retest using the same denormalized duty cycle, or you may re-map the engine, denormalize the reference duty cycle based on the new map and retest the engine using the new denormalized duty cycle.

(iii) If the last speed is less than 90% of the first speed, reduce maximum test torque by 5%, and proceed as follows:

(A) Denormalize the entire duty cycle based on the reduced maximum test torque according to § 1065.512.

(B) Retest the engine using the denormalized test cycle that is based on the reduced maximum test torque.

(C) If your engine still fails the cycle criteria, reduce the maximum test torque by another 5% of the original maximum test torque.

(D) If your engine fails after repeating this procedure four times, such that your engine still fails after you have reduced the maximum test torque by 20% of the original maximum test torque, notify us and we will consider specifying a more appropriate duty cycle for your engine under the provisions of § 1065.10(c).

(i) [Reserved]

(j) Measure and record ambient temperature, pressure, and humidity, as appropriate. For testing the following engines, you must record ambient temperature continuously to verify that it remains within the pre-test temperature range as specified in § 1065.520(b):

(1) Air-cooled engines.

(2) Engines equipped with auxiliary emission control devices that sense and respond to ambient temperature.

(3) Any other engine for which good engineering judgment indicates this is necessary to remain consistent with § 1065.10(c)(1).

[73 FR 37321, June 30, 2008, as amended at 75 FR 23043, Apr. 30, 2010]

§ 1065.545 Validation of proportional flow control for batch sampling.

For any proportional batch sample such as a bag or PM filter, demonstrate that proportional sampling was maintained using one of the following, noting that you may omit up to 5% of the total number of data points as outliers:

(a) For any pair of flow meters, use recorded sample and total flow rates, where total flow rate means the raw exhaust flow rate for raw exhaust sampling and the dilute exhaust flow rate for CVS sampling, or their 1 Hz means with the statistical calculations in § 1065.602. Determine the standard error of the estimate, *SEE*, of the sample flow rate versus the total flow rate. For each test interval, demonstrate that *SEE* was less than or equal to 3.5% of the mean sample flow rate.

(b) For any pair of flow meters, use recorded sample and total flow rates, where total flow rate means the raw exhaust flow rate for raw exhaust sampling and the dilute exhaust flow rate for CVS sampling, or their 1 Hz means to demonstrate that each flow rate was constant within ±2.5% of its respective mean or target flow rate. You may use the following options instead of recording the respective flow rate of each type of meter:

(1) *Critical-flow venturi option.* For critical-flow venturis, you may use recorded venturi-inlet conditions or their 1 Hz means. Demonstrate that the flow density at the venturi inlet was constant within ±2.5% of the mean or target density over each test interval. For a CVS critical-flow venturi, you may demonstrate this by showing that the absolute temperature at the venturi inlet was constant within ±4% of the mean or target absolute temperature over each test interval.

(2) *Positive-displacement pump option.* You may use recorded pump-inlet conditions or their 1 Hz means. Demonstrate that the flow density at the pump inlet was constant within ±2.5% of the mean or target density over each test interval. For a CVS pump, you may demonstrate this by showing that the absolute temperature at the pump inlet was constant within ±2% of the mean or target absolute temperature over each test interval.

(c) Using good engineering judgment, demonstrate with an engineering analysis that the proportional-flow control system inherently ensures proportional sampling under all circumstances expected during testing. For example, you might use CFVs for both sample flow and total flow and demonstrate that they always have the same inlet pressures and temperatures and that they always operate under critical-flow conditions.

[73 FR 37322, June 30, 2008, as amended at 75 FR 23043, Apr. 30, 2010]

§ 1065.546 Validation of minimum dilution ratio for PM batch sampling.

Use continuous flows and/or tracer gas concentrations for transient and ramped modal cycles to validate the minimum dilution ratios for PM batch sampling as specified in § 1065.140(e)(2) over the test interval. You may use mode-average values instead of continuous measurements for discrete mode steady-state duty cycles. Determine the minimum primary and minimum overall dilution ratios using one of the following methods (you may use a different method for each stage of dilution):

(a) Determine minimum dilution ratio based on molar flow data. This involves determination of at least two of the following three quantities: Raw exhaust flow (or previously diluted flow), dilution air flow, and dilute exhaust flow. You may determine the raw exhaust flow rate based on the measured intake air molar flow rate and the chemical balance terms in § 1065.655. You may alternatively estimate the molar raw exhaust flow rate based on intake air, fuel rate measurements, and fuel properties, consistent with good engineering judgment.

(b) Determine minimum dilution ratio based on tracer gas (*e.g.*, CO_2) concentrations in the raw (or previously diluted) and dilute exhaust corrected for any removed water.

(c) Use good engineering judgment to develop your own method of determining dilution ratios.

[75 FR 23043, Apr. 30, 2010]

§ 1065.550 Gas analyzer range validation, drift validation, and drift correction.

(a) *Range validation*. If an analyzer operated above 100% of its range at any time during the test, perform the following steps:

(1) For batch sampling, re-analyze the sample using the lowest analyzer range that results in a maximum instrument response below 100%. Report the result from the lowest range from which the analyzer operates below 100% of its range.

(2) For continuous sampling, repeat the entire test using the next higher analyzer range. If the analyzer again operates above 100% of its range, repeat the test using the next higher range. Continue to repeat the test until the analyzer always operates at less than 100% of its range.

(b) *Drift validation and drift correction*. Calculate two sets of brake-specific emission results for each test interval. Calculate one set using the data before drift correction and calculate the other set after correcting all the data for drift according to § 1065.672. Use the two sets of brake-specific emission results to validate the duty cycle for drift as follows:

(1) The duty cycle is validated for drift if you satisfy one of the following criteria:

(i) For each test interval of the duty cycle and for each measured exhaust constituent, the difference between the uncorrected and the corrected brake-specific emission values over the test interval is within ±4% of the uncorrected value or applicable emission standard, whichever is greater. This requirement also applies for CO_2, whether or not an emission standard applies for CO_2. Where no emission standard applies for CO_2, the difference must be within ±4% of the uncorrected value. See paragraph (b)(4) of this section for exhaust constituents other than CO_2 for which no emission standard applies.

(ii) For the entire duty cycle and for each measured exhaust constituent, the difference between the uncorrected and corrected composite brake-specific emission values over the entire duty cycle is within ±4% of the uncorrected value or the applicable emission standard, whichever is greater. Note that for purposes of drift validation using composite brake-specific emission values over the entire duty cycle, leave unaltered any negative emission results over a given test interval (*i.e.*, do not set them to zero). A third calculation of composite brake-specific emission values is required for final reporting. This calculation uses drift-corrected mass (or mass rate) values from each test interval and sets any negative mass (or mass rate) values to zero before calculating the composite brake-specific emission values over the entire duty cycle. This requirement also applies for CO_2, whether or not an emission standard applies for CO_2. Where no emission standard applies for CO_2, the difference must be within ±4% of the uncorrected value. *See* paragraph (b)(4) of this section for exhaust constituents other than CO_2 for which no emission standard applies.

(2) For standards consisting of combined, individual measurements of exhaust constituents (such as NO_X + NMHC or separate NO and NO_2 measurements to comply with a NO_X standard), the duty cycle shall be validated for drift if you satisfy one of the following:

(i) For each test interval of the duty cycle and for each individually measured exhaust constituent (*e.g.* NO, NO_2, NO_X, or NMHC), the difference between the uncorrected and the corrected brake-specific emission values over the test interval is within ±4% of the uncorrected value; or

(ii) For each test interval of the duty cycle or for the entire duty cycle the difference between the combined (*e.g.* NO_X + NMHC) uncorrected and combined (*e.g.* NO_X + NMHC) corrected composite brake-specific emissions values over each test interval of the duty cycle or the entire duty cycle is within ±4% of the uncorrected value or the applicable emissions standard, whichever is greater.

(3) If the test is not validated for drift, you may consider the test results for the duty cycle to be valid only if, using good engineering judgment, the observed drift does not affect your ability to demonstrate compliance with the applicable emission standards. For example, if the drift-corrected value is less than the standard by at least two times the absolute difference between the uncorrected and corrected values, you may consider the data to be valid for demonstrating compliance with the applicable standard.

(4) The provisions of this paragraph (b)(4) apply for measurement of pollutants other than CO_2 for which no emission standard applies (for purposes of this provision, standards consisting of combined, individual measurements are considered to be standards for each individual pollutant). You may use measurements that do not meet the drift validation criteria specified in paragraph (b)(1). For example, this allowance may be appropriate for measuring and reporting very low concentrations of CH_4 and N_2O as long as no emission standard applies for these compounds.

[73 FR 37322, June 30, 2008, as amended at 74 FR 56515, Oct. 30, 2009; 75 FR 23044, Apr. 30, 2010; 75 FR 68463, Nov. 8, 2010]

§ 1065.590 PM sampling media (e.g., filters) preconditioning and tare weighing.

Before an emission test, take the following steps to prepare PM sampling media (e.g., filters) and equipment for PM measurements:

(a) Make sure the balance and PM-stabilization environments meet the periodic verifications in § 1065.390.

(b) Visually inspect unused sample media (e.g., filters) for defects and discard defective media.

(c) To handle PM sampling media (e.g., filters), use electrically grounded tweezers or a grounding strap, as described in § 1065.190.

(d) Place unused sample media (e.g., filters) in one or more containers that are open to the PM-stabilization environment. If you are using filters, you may place them in the bottom half of a filter cassette.

(e) Stabilize sample media (e.g., filters) in the PM-stabilization environment. Consider an unused sample medium stabilized as long as it has been in the PM-stabilization environment for a minimum of 30 min, during which the PM-stabilization environment has been within the specifications of § 1065.190.

(f) Weigh the sample media (e.g., filters) automatically or manually, as follows:

(1) For automatic weighing, follow the automation system manufacturer's instructions to prepare samples for weighing. This may include placing the samples in a special container.

(2) For manual weighing, use good engineering judgment to determine if substitution weighing is necessary to show that an engine meets the applicable standard. You may follow the substitution weighing procedure in paragraph (j) of this section, or you may develop your own procedure.

(g) Correct the measured mass of each sample medium (e.g., filter) for buoyancy as described in § 1065.690. These buoyancy-corrected values are subsequently subtracted from the post-test mass of the corresponding sample media (e.g., filters) and collected PM to determine the mass of PM emitted during the test.

(h) You may repeat measurements to determine the mean mass of each sample medium (e.g., filter). Use good engineering judgment to exclude outliers from the calculation of mean mass values.

(i) If you use filters as sample media, load unused filters that have been tare-weighed into clean filter cassettes and place the loaded cassettes in a clean, covered or sealed container before removing them from the stabilization environment for transport to the test site for sampling. We recommend that you keep filter cassettes clean by periodically washing or wiping them with a compatible solvent applied using a lint-free cloth. Depending upon your cassette material, ethanol (C_2H_5OH) might be an acceptable solvent. Your cleaning frequency will depend on your engine's level of PM and HC emissions.

(j) Substitution weighing involves measurement of a reference weight before and after each weighing of PM sampling media (e.g., filters). While substitution weighing requires more measurements, it corrects for a balance's zero-drift and it relies on balance linearity only over a small range. This is most advantageous when quantifying net PM masses that are less than 0.1% of the sample medium's mass. However, it may not be advantageous when net PM masses exceed 1% of the sample medium's mass. If you utilize substitution weighing, it must be used for both pre-test and post-test weighing. The same substitution weight must be used for both pre-test and post-test weighing. Correct the mass of the substitution weight for buoyancy if the density of the substitution weight is less than 2.0 g/cm^3. The following steps are an example of substitution weighing:

(1) Use electrically grounded tweezers or a grounding strap, as described in § 1065.190.

(2) Use a static neutralizer as described in § 1065.190 to minimize static electric charge on any object before it is placed on the balance pan.

(3) Select a substitution weight that meets the requirements for calibration weights found in § 1065.790. The substitution weight must also have the same density as the weight you use to span the microbalance, and be similar in mass to an unused sample medium (e.g., filter). A 47 mm PTFE membrane filter will typically have a mass in the range of 80 to 100 mg.

(4) Record the stable balance reading, then remove the calibration weight.

(5) Weigh an unused sample medium (e.g., a new filter), record the stable balance reading and record the balance environment's dewpoint, ambient temperature, and atmospheric pressure.

(6) Reweigh the calibration weight and record the stable balance reading.

(7) Calculate the arithmetic mean of the two calibration-weight readings that you recorded immediately before and after weighing the unused sample. Subtract that mean value from the unused sample reading, then add the true mass of the calibration weight as stated on the calibration-weight certificate. Record this result. This is the unused sample's tare weight without correcting for buoyancy.

(8) Repeat these substitution-weighing steps for the remainder of your unused sample media.

(9) Once weighing is completed, follow the instructions given in paragraphs (g) through (i) of this section.

[73 FR 37323, June 30, 2008]

§ 1065.595 PM sample post-conditioning and total weighing.

After testing is complete, return the sample media (e.g., filters) to the weighing and PM-stabilization environments.

(a) Make sure the weighing and PM-stabilization environments meet the ambient condition specifications in § 1065.190(e)(1). If those specifications are not met, leave the test sample media (e.g., filters) covered until proper conditions have been met.

(b) In the PM-stabilization environment, remove PM samples from sealed containers. If you use filters, you may remove them from their cassettes before or after stabilization. We recommend always removing the top portion of the cassette before stabilization. When you remove a filter from a cassette, separate the top half of the cassette from the bottom half using a cassette separator designed for this purpose.

(c) To handle PM samples, use electrically grounded tweezers or a grounding strap, as described in § 1065.190.

(d) Visually inspect the sampling media (e.g., filters) and collected particulate. If either the sample media (e.g., filters) or particulate sample appear to have been compromised, or the

particulate matter contacts any surface other than the filter, the sample may not be used to determine particulate emissions. In the case of contact with another surface, clean the affected surface before continuing.

(e) To stabilize PM samples, place them in one or more containers that are open to the PM-stabilization environment, as described in § 1065.190. If you expect that a sample medium's (e.g., filter's) total surface concentration of PM will be less than 400 μg, assuming a 38 mm diameter filter stain area, expose the filter to a PM-stabilization environment meeting the specifications of § 1065.190 for at least 30 minutes before weighing. If you expect a higher PM concentration or do not know what PM concentration to expect, expose the filter to the stabilization environment for at least 60 minutes before weighing. Note that 400 μg on sample media (e.g., filters) is an approximate net mass of 0.07 g/kW·hr for a hot-start test with compression-ignition engines tested according to 40 CFR part 86, subpart N, or 50 mg/mile for light-duty vehicles tested according to 40 CFR part 86, subpart B.

(f) Repeat the procedures in § 1065.590(f) through (i) to determine post-test mass of the sample media (e.g., filters).

(g) Subtract each buoyancy-corrected tare mass of the sample medium (e.g., filter) from its respective buoyancy-corrected mass. The result is the net PM mass, m_{PM}. Use m_{PM} in emission calculations in § 1065.650.

[73 FR 37323, June 30, 2008]

Subpart G—Calculations and Data Requirements

§ 1065.601 Overview.

(a) This subpart describes how to—

(1) Use the signals recorded before, during, and after an emission test to calculate brake-specific emissions of each measured exhaust constituent.

(2) Perform calculations for calibrations and performance checks.

(3) Determine statistical values.

(b) You may use data from multiple systems to calculate test results for a single emission test, consistent with good engineering judgment. You may also make multiple measurements from a single batch sample, such as multiple weighings of a PM filter or multiple readings from a bag sample. You may not use test results from multiple emission tests to report emissions. We allow weighted means where appropriate. You may discard statistical outliers, but you must report all results.

(c) You may use any of the following calculations instead of the calculations specified in this subpart G:

(1) Mass-based emission calculations prescribed by the International Organization for Standardization (ISO), according to ISO 8178, except the following:

(i) ISO 8178–1 Section 14.4, NO_X Correction for Humidity and Temperature. See § 1065.670 for approved methods for humidity corrections.

(ii) ISO 8178–1 Section 15.1, Particulate Correction Factor for Humidity.

(2) Other calculations that you show are equivalent to within ±0.1% of the brake-specific emission results determined using the calculations specified in this subpart G.

[70 FR 40516, July 13, 2005, as amended at 73 FR 37324, June 30, 2008; 74 FR 56516, Oct. 30, 2009; 75 FR 23044, Apr. 30, 2010]

§ 1065.602 Statistics.

(a) *Overview*. This section contains equations and example calculations for statistics that are specified in this part. In this section we use the letter ''y'' to denote a generic measured quantity, the superscript over-bar ''–'' to denote an arithmetic mean, and the subscript ''$_{ref}$'' to denote the reference quantity being measured.

(b) *Arithmetic mean*. Calculate an arithmetic mean, $\bar{y}$, as follows:

$$\bar{y} = \frac{\sum_{i=1}^{N} y_i}{N} \qquad \text{Eq. 1065.602-1}$$

Example:

$N = 3$

$y_1 = 10.60$
$y_2 = 11.91$
$y_N = y_3 = 11.09$

$$\bar{y} = \frac{10.60 + 11.91 + 11.09}{3}$$

$\bar{y} = 11.20$

(c) *Standard deviation*. Calculate the standard deviation for a non-biased (e.g., N–1) sample, σ, as follows:

$$\sigma_y = \sqrt{\frac{\sum_{i=1}^{N} (y_i - \bar{y})^2}{(N-1)}} \qquad \text{Eq. 1065.602-2}$$

Example:

$N = 3$
$y_1 = 10.60$
$y_2 = 11.91$
$y_N = y_3 = 11.09$
$\bar{y} = 11.20$

$$\sigma_y = \sqrt{\frac{(10.60 - 11.2)^2 + (11.91 - 11.2)^2 + (11.09 - 11.2)^2}{2}}$$

$\sigma_y = 0.6619$

(d) *Root mean square*. Calculate a root mean square, rms_y, as follows:

$$rms_y = \sqrt{\frac{1}{N} \sum_{i=1}^{N} y_i^2} \qquad \text{Eq. 1065.602-3}$$

Example:

$N = 3$
$y_1 = 10.60$
$y_2 = 11.91$
$y_N = y_3 = 11.09$

$$rms_y = \sqrt{\frac{10.60 + 11.91^2 + 11.09^2}{3}}$$

$rms_y = 11.21$

(e) *Accuracy*. Determine accuracy as described in this paragraph (e). Make multiple measurements of a standard quantity to create a set of observed values, y_i, and compare each observed value to the known value of the standard quantity. The standard quantity may have a single known value, such as a gas standard, or a set of known values of negligible range, such as a known applied pressure produced by a calibration device during repeated applications. The known value of the standard quantity is represented by y_{ref_i}. If you use a standard quantity with a single value, y_{ref_i} would be constant. Calculate an accuracy value as follows:

$$accuracy = \left| \frac{1}{N} \sum_{i=1}^{N} \left(y_i - y_{ref_i} \right) \right| \qquad \text{Eq. 1065.602-4}$$

Example:

y_{ref} = 1800.0
N = 3

y_1 = 1806.4
y_2 = 1803.1
y_3 = 1798.9

$$accuracy = \left| \frac{1}{3} ((1806.4 - 1800.0) + (1803.1 - 1800.0) + (1798.9 - 1800.0)) \right|$$

$$accuracy = \left| \frac{1}{3} ((6.4) + (3.1) + (-1.1)) \right|$$

accuracy = 2.8

(f) *t-test*. Determine if your data passes a *t*-test by using the following equations and tables:

(1) For an unpaired *t*-test, calculate the *t* statistic and its number of degrees of freedom, ν, as follows:

$$t = \frac{\left| \bar{y}_{ref} - \bar{y} \right|}{\sqrt{\frac{\sigma_{ref}^2}{N_{ref}} + \frac{\sigma_y^2}{N}}} \qquad \text{Eq. 1065.602-5}$$

$$v = \frac{\left(\frac{\sigma_{ref}^2}{N_{ref}} + \frac{\sigma_y^2}{N} \right)^2}{\frac{\left(\sigma_{ref}^2 / N_{ref} \right)^2}{N_{ref} - 1} + \frac{\left(\sigma_y^2 / N \right)^2}{N - 1}} \qquad \text{Eq. 1065.602-6}$$

Example:

$\bar{y}_{ref}$ = 1205.3
$\bar{y}$ = 1123.8
σ_{ref} = 9.399
σ_y = 10.583
N_{ref} = 11
N= 7

$$t = \frac{|1205.3 - 1123.8|}{\sqrt{\frac{9.399^2}{11} + \frac{10.583^2}{7}}}$$

t = 16.63
σ_{ref} = 9.399
σ_y = 10.583
N_{ref} = 11
N = 7

$$t = \frac{|1205.3 - 1123.8|}{\sqrt{\frac{9.399^2}{11} + \frac{10.583^2}{7}}}$$

ν = 11.76

(2) For a paired *t*-test, calculate the *t* statistic and its number of degrees of freedom, ν, as follows, noting that the ε_i are the errors (e.g., differences) between each pair of y_{refi} and y_i:

$$t = \frac{|\bar{\varepsilon}| \cdot \sqrt{N}}{\sigma_\varepsilon} \qquad \text{Eq. 1065.602-7}$$

Example:

$\bar{\varepsilon} = -0.12580$
$N = 16$
$\sigma\varepsilon = 0.04837$

$$t = \frac{|-0.12580| \cdot \sqrt{16}}{0.04837}$$

$t = 10.403$
$\nu = N - 1$

Example:

$N = 16$
$\nu = 16 - 1$
$\nu = 15$

(3) Use Table 1 of this section to compare t to the t_{crit} values tabulated versus the number of degrees of freedom. If t is less than t_{crit}, then t passes the t-test. The Microsoft Excel software package contains a TINV function that returns results equivalent to § 1065.602 Table 1 and may be used in place of Table 1.

TABLE 1 OF § 1065.602—CRITICAL *t* VALUES VERSUS NUMBER OF DEGREES OF FREEDOM, ν [1]

ν	Confidence	
	90%	95%
1	6.314	12.706
2	2.920	4.303
3	2.353	3.182
4	2.132	2.776
5	2.015	2.571
6	1.943	2.447
7	1.895	2.365
8	1.860	2.306
9	1.833	2.262
10	1.812	2.228
11	1.796	2.201
12	1.782	2.179
13	1.771	2.160
14	1.761	2.145
15	1.753	2.131
16	1.746	2.120
18	1.734	2.101
20	1.725	2.086
22	1.717	2.074
24	1.711	2.064
26	1.706	2.056
28	1.701	2.048
30	1.697	2.042
35	1.690	2.030
40	1.684	2.021
50	1.676	2.009
70	1.667	1.994
100	1.660	1.984
1000+	1.645	1.960

[1] Use linear interpolation to establish values not shown here.

(g) *F-test*. Calculate the F statistic as follows:

$$F_y = \frac{\sigma_y^2}{\sigma_{ref}^2} \qquad \text{Eq. 1065.602-8}$$

Example:

$$\sigma_y = \sqrt{\frac{\sum_{i=1}^{N}(y_i - \bar{y})^2}{(N-1)}} = 10.583$$

$$\sigma_{ref} = \sqrt{\frac{\sum_{i=1}^{N_{ref}}(y_{refi} - \bar{y}_{ref})^2}{(N_{ref} - 1)}} = 9.399$$

$$F = \frac{10.583^2}{9.399^2}$$

$F = 1.268$

(1) For a 90% confidence F-test, use Table 2 of this section to compare F to the F_{crit90} values tabulated versus $(N-1)$ and $(N_{ref}-1)$. If F is less than F_{crit90}, then F passes the F-test at 90% confidence.

(2) For a 95% confidence F-test, use Table 3 of this section to compare F to the F_{crit95} values tabulated versus $(N-1)$ and $(N_{ref}-1)$. If F is less than F_{crit95}, then F passes the F-test at 95% confidence.

Table 2 of §1065.602–Critical F values, F_{crit90}, versus N-1 and N_{ref}-1 at 90 % confidence

N-1	1	2	3	4	5	6	7	8	9	10	12	15	20	24	30	40	60	120	1000+
N_{ref}-1																			
1	39.86	49.50	53.59	55.83	57.24	58.20	58.90	59.43	59.85	60.19	60.70	61.22	61.74	62.00	62.26	62.52	62.79	63.06	63.32
2	8.526	9.000	9.162	9.243	9.293	9.326	9.349	9.367	9.381	9.392	9.408	9.425	9.441	9.450	9.458	9.466	9.475	9.483	9.491
3	5.538	5.462	5.391	5.343	5.309	5.285	5.266	5.252	5.240	5.230	5.216	5.200	5.184	5.176	5.168	5.160	5.151	5.143	5.134
4	4.545	4.325	4.191	4.107	4.051	4.010	3.979	3.955	3.936	3.920	3.896	3.870	3.844	3.831	3.817	3.804	3.790	3.775	3.761
5	4.060	3.780	3.619	3.520	3.453	3.405	3.368	3.339	3.316	3.297	3.268	3.238	3.207	3.191	3.174	3.157	3.140	3.123	3.105
6	3.776	3.463	3.289	3.181	3.108	3.055	3.014	2.983	2.958	2.937	2.905	2.871	2.836	2.818	2.800	2.781	2.762	2.742	2.722
7	3.589	3.257	3.074	2.961	2.883	2.827	2.785	2.752	2.725	2.703	2.668	2.632	2.595	2.575	2.555	2.535	2.514	2.493	2.471
8	3.458	3.113	2.924	2.806	2.726	2.668	2.624	2.589	2.561	2.538	2.502	2.464	2.425	2.404	2.383	2.361	2.339	2.316	2.293
9	3.360	3.006	2.813	2.693	2.611	2.551	2.505	2.469	2.440	2.416	2.379	2.340	2.298	2.277	2.255	2.232	2.208	2.184	2.159
10	3.285	2.924	2.728	2.605	2.522	2.461	2.414	2.377	2.347	2.323	2.284	2.244	2.201	2.178	2.155	2.132	2.107	2.082	2.055
11	3.225	2.860	2.660	2.536	2.451	2.389	2.342	2.304	2.274	2.248	2.209	2.167	2.123	2.100	2.076	2.052	2.026	2.000	1.972
12	3.177	2.807	2.606	2.480	2.394	2.331	2.283	2.245	2.214	2.188	2.147	2.105	2.060	2.036	2.011	1.986	1.960	1.932	1.904
13	3.136	2.763	2.560	2.434	2.347	2.283	2.234	2.195	2.164	2.138	2.097	2.053	2.007	1.983	1.958	1.931	1.904	1.876	1.846
14	3.102	2.726	2.522	2.395	2.307	2.243	2.193	2.154	2.122	2.095	2.054	2.010	1.962	1.938	1.912	1.885	1.857	1.828	1.797
15	3.073	2.695	2.490	2.361	2.273	2.208	2.158	2.119	2.086	2.059	2.017	1.972	1.924	1.899	1.873	1.845	1.817	1.787	1.755
16	3.048	2.668	2.462	2.333	2.244	2.178	2.128	2.088	2.055	2.028	1.985	1.940	1.891	1.866	1.839	1.811	1.782	1.751	1.718
17	3.026	2.645	2.437	2.308	2.218	2.152	2.102	2.061	2.028	2.001	1.958	1.912	1.862	1.836	1.809	1.781	1.751	1.719	1.686
18	3.007	2.624	2.416	2.286	2.196	2.130	2.079	2.038	2.005	1.977	1.933	1.887	1.837	1.810	1.783	1.754	1.723	1.691	1.657
19	2.990	2.606	2.397	2.266	2.176	2.109	2.058	2.017	1.984	1.956	1.912	1.865	1.814	1.787	1.759	1.730	1.699	1.666	1.631
20	2.975	2.589	2.380	2.249	2.158	2.091	2.040	1.999	1.965	1.937	1.892	1.845	1.794	1.767	1.738	1.708	1.677	1.643	1.607
21	2.961	2.575	2.365	2.233	2.142	2.075	2.023	1.982	1.948	1.920	1.875	1.827	1.776	1.748	1.719	1.689	1.657	1.623	1.586
20	2.949	2.561	2.351	2.219	2.128	2.061	2.008	1.967	1.933	1.904	1.859	1.811	1.759	1.731	1.702	1.671	1.639	1.604	1.567
23	2.937	2.549	2.339	2.207	2.115	2.047	1.995	1.953	1.919	1.890	1.845	1.796	1.744	1.716	1.686	1.655	1.622	1.587	1.549
24	2.927	2.538	2.327	2.195	2.103	2.035	1.983	1.941	1.906	1.877	1.832	1.783	1.730	1.702	1.672	1.641	1.607	1.571	1.533
25	2.918	2.528	2.317	2.184	2.092	2.024	1.971	1.929	1.895	1.866	1.820	1.771	1.718	1.689	1.659	1.627	1.593	1.557	1.518
26	2.909	2.519	2.307	2.174	2.082	2.014	1.961	1.919	1.884	1.855	1.809	1.760	1.706	1.677	1.647	1.615	1.581	1.544	1.504
27	2.901	2.511	2.299	2.165	2.073	2.005	1.952	1.909	1.874	1.845	1.799	1.749	1.695	1.666	1.636	1.603	1.569	1.531	1.491
28	2.894	2.503	2.291	2.157	2.064	1.996	1.943	1.900	1.865	1.836	1.790	1.740	1.685	1.656	1.625	1.593	1.558	1.520	1.478
29	2.887	2.495	2.283	2.149	2.057	1.988	1.935	1.892	1.857	1.827	1.781	1.731	1.676	1.647	1.616	1.583	1.547	1.509	1.467
30	2.881	2.489	2.276	2.142	2.049	1.980	1.927	1.884	1.849	1.819	1.773	1.722	1.667	1.638	1.606	1.573	1.538	1.499	1.456
40	2.835	2.440	2.226	2.091	1.997	1.927	1.873	1.829	1.793	1.763	1.715	1.662	1.605	1.574	1.541	1.506	1.467	1.425	1.377
60	2.791	2.393	2.177	2.041	1.946	1.875	1.819	1.775	1.738	1.707	1.657	1.603	1.543	1.511	1.476	1.437	1.395	1.348	1.291
120	2.748	2.347	2.130	1.992	1.896	1.824	1.767	1.722	1.684	1.652	1.601	1.545	1.482	1.447	1.409	1.368	1.320	1.265	1.193
1000+	2.706	2.303	2.084	1.945	1.847	1.774	1.717	1.670	1.632	1.599	1.546	1.487	1.421	1.383	1.342	1.295	1.240	1.169	1.000

Table 3 of §1065.602–Critical F values, F_{crit95}, versus N-1 and N_{ref}-1 at 95 % confidence

N-1	1	2	3	4	5	6	7	8	9	10	12	15	20	24	30	40	60	120	1000+
N_{ref}-1																			
1	161.4	199.5	215.7	224.5	230.1	233.9	236.7	238.8	240.5	241.8	243.9	245.9	248.0	249.0	250.1	251.1	252.2	253.2	254.3
2	18.51	19.00	19.16	19.24	19.29	19.33	19.35	19.37	19.38	19.39	19.41	19.42	19.44	19.45	19.46	19.47	19.47	19.48	19.49
3	10.12	9.552	9.277	9.117	9.014	8.941	8.887	8.845	8.812	8.786	8.745	8.703	8.660	8.639	8.617	8.594	8.572	8.549	8.526
4	7.709	6.944	6.591	6.388	6.256	6.163	6.094	6.041	5.999	5.964	5.912	5.858	5.803	5.774	5.746	5.717	5.688	5.658	5.628
5	6.608	5.786	5.410	5.192	5.050	4.950	4.876	4.818	4.773	4.735	4.678	4.619	4.558	4.527	4.496	4.464	4.431	4.399	4.365
6	5.987	5.143	4.757	4.534	4.387	4.284	4.207	4.147	4.099	4.060	4.000	3.938	3.874	3.842	3.808	3.774	3.740	3.705	3.669
7	5.591	4.737	4.347	4.120	3.972	3.866	3.787	3.726	3.677	3.637	3.575	3.511	3.445	3.411	3.376	3.340	3.304	3.267	3.230
8	5.318	4.459	4.066	3.838	3.688	3.581	3.501	3.438	3.388	3.347	3.284	3.218	3.150	3.115	3.079	3.043	3.005	2.967	2.928
9	5.117	4.257	3.863	3.633	3.482	3.374	3.293	3.230	3.179	3.137	3.073	3.006	2.937	2.901	2.864	2.826	2.787	2.748	2.707
10	4.965	4.103	3.708	3.478	3.326	3.217	3.136	3.072	3.020	2.978	2.913	2.845	2.774	2.737	2.700	2.661	2.621	2.580	2.538
11	4.844	3.982	3.587	3.357	3.204	3.095	3.012	2.948	2.896	2.854	2.788	2.719	2.646	2.609	2.571	2.531	2.490	2.448	2.405
12	4.747	3.885	3.490	3.259	3.106	2.996	2.913	2.849	2.796	2.753	2.687	2.617	2.544	2.506	2.466	2.426	2.384	2.341	2.296
13	4.667	3.806	3.411	3.179	3.025	2.915	2.832	2.767	2.714	2.671	2.604	2.533	2.459	2.420	2.380	2.339	2.297	2.252	2.206
14	4.600	3.739	3.344	3.112	2.958	2.848	2.764	2.699	2.646	2.602	2.534	2.463	2.388	2.349	2.308	2.266	2.223	2.178	2.131
15	4.543	3.682	3.287	3.056	2.901	2.791	2.707	2.641	2.588	2.544	2.475	2.403	2.328	2.288	2.247	2.204	2.160	2.114	2.066
16	4.494	3.634	3.239	3.007	2.852	2.741	2.657	2.591	2.538	2.494	2.425	2.352	2.276	2.235	2.194	2.151	2.106	2.059	2.010
17	4.451	3.592	3.197	2.965	2.810	2.699	2.614	2.548	2.494	2.450	2.381	2.308	2.230	2.190	2.148	2.104	2.058	2.011	1.960
18	4.414	3.555	3.160	2.928	2.773	2.661	2.577	2.510	2.456	2.412	2.342	2.269	2.191	2.150	2.107	2.063	2.017	1.968	1.917
19	4.381	3.522	3.127	2.895	2.740	2.628	2.544	2.477	2.423	2.378	2.308	2.234	2.156	2.114	2.071	2.026	1.980	1.930	1.878
20	4.351	3.493	3.098	2.866	2.711	2.599	2.514	2.447	2.393	2.348	2.278	2.203	2.124	2.083	2.039	1.994	1.946	1.896	1.843
21	4.325	3.467	3.073	2.840	2.685	2.573	2.488	2.421	2.366	2.321	2.250	2.176	2.096	2.054	2.010	1.965	1.917	1.866	1.812
22	4.301	3.443	3.049	2.817	2.661	2.549	2.464	2.397	2.342	2.297	2.226	2.151	2.071	2.028	1.984	1.938	1.889	1.838	1.783
23	4.279	3.422	3.028	2.796	2.640	2.528	2.442	2.375	2.320	2.275	2.204	2.128	2.048	2.005	1.961	1.914	1.865	1.813	1.757
24	4.260	3.403	3.009	2.776	2.621	2.508	2.423	2.355	2.300	2.255	2.183	2.108	2.027	1.984	1.939	1.892	1.842	1.790	1.733
25	4.242	3.385	2.991	2.759	2.603	2.490	2.405	2.337	2.282	2.237	2.165	2.089	2.008	1.964	1.919	1.872	1.822	1.768	1.711
26	4.225	3.369	2.975	2.743	2.587	2.474	2.388	2.321	2.266	2.220	2.148	2.072	1.990	1.946	1.901	1.853	1.803	1.749	1.691
27	4.210	3.354	2.960	2.728	2.572	2.459	2.373	2.305	2.250	2.204	2.132	2.056	1.974	1.930	1.884	1.836	1.785	1.731	1.672
28	4.196	3.340	2.947	2.714	2.558	2.445	2.359	2.291	2.236	2.190	2.118	2.041	1.959	1.915	1.869	1.820	1.769	1.714	1.654
29	4.183	3.328	2.934	2.701	2.545	2.432	2.346	2.278	2.223	2.177	2.105	2.028	1.945	1.901	1.854	1.806	1.754	1.698	1.638
30	4.171	3.316	2.922	2.690	2.534	2.421	2.334	2.266	2.211	2.165	2.092	2.015	1.932	1.887	1.841	1.792	1.740	1.684	1.622
40	4.085	3.232	2.839	2.606	2.450	2.336	2.249	2.180	2.124	2.077	2.004	1.925	1.839	1.793	1.744	1.693	1.637	1.577	1.509
60	4.001	3.150	2.758	2.525	2.368	2.254	2.167	2.097	2.040	1.993	1.917	1.836	1.748	1.700	1.649	1.594	1.534	1.467	1.389
120	3.920	3.072	2.680	2.447	2.290	2.175	2.087	2.016	1.959	1.911	1.834	1.751	1.659	1.608	1.554	1.495	1.429	1.352	1.254
1000+	3.842	2.996	2.605	2.372	2.214	2.099	2.010	1.938	1.880	1.831	1.752	1.666	1.571	1.517	1.459	1.394	1.318	1.221	1.000

(h) *Slope*. Calculate a least-squares regression slope, a_{1y}, as follows:

$$a_{1y} = \frac{\sum_{i=1}^{N}\left(y_i - \bar{y}\right)\cdot\left(y_{refi} - \bar{y}_{ref}\right)}{\sum_{i=1}^{N}\left(y_{refi} - \bar{y}_{ref}\right)^2} \qquad \text{Eq. 1065.602-9}$$

Example:
$N = 6000$
$y_1 = 2045.8$
$\bar{y} = 1051.1$
$y_{ref\ 1} = 2045.0$
$\bar{y}_{ref} = 1055.3$

$$a_{iy} = \frac{(2045.8 - 1050.1)\cdot(2045.0 - 1055.3) + \ldots + \left(y_{6000} - 1050.1\right)\cdot\left(y_{ref\,6000} - 1055.3\right)}{(2045.0 - 1055.3)^2 + \ldots + \left(y_{ref\,6000} - 1055.3\right)^2}$$

$a_{1y} = 1.0110$

(i) *Intercept*. Calculate a least-squares regression intercept, a_{0y}, as follows:

$$a_{0y} = \bar{y} - \left(a_{1y}\cdot\bar{y}_{ref}\right) \qquad \text{Eq. 1065.602-10}$$

Example:
$\bar{y} = 1050.1$
$a_{1y} = 1.0110$
$\bar{y}_{ref} = 1055.3$
$a_{0y} = 1050.1 - (1.0110 \cdot 1055.3)$
$a_{0y} = -16.8083$

(j) *Standard estimate of error*. Calculate a standard estimate of error, *SEE*, as follows:

$$SEE_y = \sqrt{\frac{\sum_{i=1}^{N}\left[y_i - a_{0y} - \left(a_{1y}\cdot y_{refi}\right)\right]^2}{N-2}} \qquad \text{Eq. 1065.602-11}$$

Example:
$N = 6000$
$y_1 = 2045.8$
$a_{0y} = -16.8083$
$a_{1y} = 1.0110$
$y_{refi} = 2045.0$

$$SEE_y = \sqrt{\frac{\left[2045.8 - (-16.8083) - (1.0110\cdot 2045.0)\right]^2 + \ldots\left[y_{6000} - (-16.8083) - \left(1.0110\cdot y_{ref\,6000}\right)\right]^2}{6000-2}}$$

$SEE_y = 5.348$

(k) *Coefficient of determination*. Calculate a coefficient of determination, r^2, as follows:

$$r_y^2 = 1 - \frac{\sum_{i=1}^{N}\left[y_i - a_{0y} - \left(a_{1y} \cdot y_{refi}\right)\right]^2}{\sum_{i=1}^{N}\left[y_i - \bar{y}\right]^2} \qquad \text{Eq. 1065.602-12}$$

Example:

$N = 6000$

$y_1 = 2045.8$

$a_{0y} = -16.8083$

$a_{1y} = 1.0110$

$y_{refi} = 2045.0$

$\bar{y} = 1480.5$

$$r_y^2 = 1 - \frac{\left[2045.8 - (-16.8083) - (1.0110 \times 2045.0)\right]^2 + \ldots\left[y_{6000} - (-16.8083) - \left(1.0110 \cdot y_{ref6000}\right)\right]^2}{\left[2045.8 - 1480.5\right]^2 + \ldots\left[y_{6000} - 1480.5\right]^2}$$

$$r_y^2 = 0.9859$$

(l) *Flow-weighted mean concentration.* In some sections of this part, you may need to calculate a flow-weighted mean concentration to determine the applicability of certain provisions. A flow-weighted mean is the mean of a quantity after it is weighted proportional to a corresponding flow rate. For example, if a gas concentration is measured continuously from the raw exhaust of an engine, its flow-weighted mean concentration is the sum of the products of each recorded concentration times its respective exhaust molar flow rate, divided by the sum of the recorded flow rate values. As another example, the bag concentration from a CVS system is the same as the flow-weighted mean concentration because the CVS system itself flow-weights the bag concentration. You might already expect a certain flow-weighted mean concentration of an emission at its standard based on previous testing with similar engines or testing with similar equipment and instruments. If you need to estimate your expected flow-weighted mean concentration of an emission at its standard, we recommend using the following examples as a guide for how to estimate the flow-weighted mean concentration expected at the standard. Note that these examples are not exact and that they contain assumptions that are not always valid. Use good engineering judgment to determine if you can use similar assumptions.

(1) To estimate the flow-weighted mean raw exhaust NO_X concentration from a turbocharged heavy-duty compression-ignition engine at a NO_X standard of 2.5 g/(kW·hr), you may do the following:

(i) Based on your engine design, approximate a map of maximum torque versus speed and use it with the applicable normalized duty cycle in the standard-setting part to generate a reference duty cycle as described in §1065.610. Calculate the total reference work, W_{ref}, as described in §1065.650. Divide the reference work by the duty cycle's time interval, $\Delta t_{dutycycle}$, to determine mean reference power, $\bar{P}_{ref}$.

(ii) Based on your engine design, estimate maximum power, P_{max}, the design speed at maximum power, f_{nmax}, the design maximum intake manifold boost pressure, p_{inmax}, and temperature, T_{inmax}. Also, estimate a mean fraction of power that is lost due to friction and pumping, $\bar{P}_{frict}$. Use this information along with the engine displacement volume, V_{disp}, an approximate volumetric efficiency, η_V, and the number of engine strokes per power stroke (2-stroke or 4-stroke), N_{stroke} to estimate the maximum raw exhaust molar flow rate, $\dot{n}_{exhmax}$.

(iii) Use your estimated values as described in the following example calculation:

$$\bar{x}_{exp} = \frac{e_{std} \cdot W_{ref}}{M \cdot \dot{n}_{exhmax} \cdot \Delta t_{duty\ cycle} \cdot \left(\frac{\bar{P}_{ref} + \left(\bar{P}_{frict} \cdot P_{max} \right)}{P_{max}} \right)} \qquad \text{Eq. 1065.602-13}$$

$$\dot{n}_{exhmax} = \frac{p_{max} \cdot V_{disp} \cdot f_{nmax} \cdot \frac{2}{N_{stroke}} \cdot \eta_V}{R \cdot T_{max}} \qquad \text{Eq. 1065.602-14}$$

Example:

e_{NOx} = 2.5 g/(kW·hr)
W_{ref} = 11.883 kW·hr
M_{NOx} = 46.0055 g/mol = 46.0055·10^{-6} g/µmol
$\Delta t_{dutycycle}$ = 20 min = 1200 s
$\bar{P}_{ref}$ = 35.65 kW
$\bar{P}_{frict}$ = 15%
P_{max} = 125 kW
p_{max} = 300 kPa = 300000 Pa
V_{disp} = 3.0 l = 0.0030 m^3
f_{nmax} = 2800 rev/min = 46.67 rev/s
N_{stroke} = 4 1/rev
η_V = 0.9
R = 8.314472 J/(mol·K)
T_{max} = 348.15 K

$$\dot{n}_{exhmax} = \frac{300000 \cdot 0.0030 \cdot 46.67 \cdot \frac{2}{4} \cdot 0.9}{8.314472 \cdot 348.15}$$

$\dot{n}_{exhmax}$ = 6.53 mol/s

$$\bar{x}_{exp} = \frac{2.5 \cdot 11.883}{46.0055 \cdot 10^{-6} \cdot 6.53 \cdot 1200 \cdot \left(\frac{35.65 + (0.15 \cdot 125)}{125} \right)}$$

$\bar{x}_{exp}$ = 189.4 µmol/mol

(2) To estimate the flow-weighted mean NMHC concentration in a CVS from a naturally aspirated nonroad spark-ignition engine at an NMHC standard of 0.5 g/(kW·hr), you may do the following:

(i) Based on your engine design, approximate a map of maximum torque versus speed and use it with the applicable normalized duty cycle in the standard-setting part to generate a reference duty cycle as described in §1065.610. Calculate the total reference work, W_{ref}, as described in §1065.650.

(ii) Multiply your CVS total molar flow rate by the time interval of the duty cycle, $\Delta t_{dutycycle}$. The result is the total diluted exhaust flow of the n_{dexh}.

(iii) Use your estimated values as described in the following example calculation:

$$\bar{x}_{NMHC} = \frac{e_{std} \cdot W_{ref}}{M \cdot \dot{n}_{dexh} \cdot \Delta t_{duty\ cycle}} \qquad \text{Eq. 1065.602-15}$$

Example:

e_{NMHC} = 1.5 g/(kW·hr)
W_{ref} = 5.389 kW·hr
M_{NMHC} = 13.875389 g/mol = 13.875389 · 10^{-6} g/μmol
$\dot{n}_{dexh}$ = 6.021 mol/s
$\Delta t_{dutycycle}$ = 30 min = 1800 s

$$\bar{x}_{NMHC} = \frac{1.5 \cdot 5.389}{13.875389 \cdot 10^{-6} \cdot 6.021 \cdot 1800}$$

$\bar{x}_{NMHC}$ = 53.8 μmol/mol

[70 FR 40516, July 13, 2005, as amended at 73 FR 37324, June 30, 2008; 75 FR 23044, Apr. 30, 2010]

§ 1065.610 Duty cycle generation.

This section describes how to generate duty cycles that are specific to your engine, based on the normalized duty cycles in the standard-setting part. During an emission test, use a duty cycle that is specific to your engine to command engine speed, torque, and power, as applicable, using an engine dynamometer and an engine operator demand. Paragraph (a) of this section describes how to ''normalize'' your engine's map to determine the maximum test speed and torque for your engine. The rest of this section describes how to use these values to ''denormalize'' the duty cycles in the standard-setting parts, which are all published on a normalized basis. Thus, the term ''normalized'' in paragraph (a) of this section refers to different values than it does in the rest of the section.

(a) *Maximum test speed*, f_{ntest}. This section generally applies to duty cycles for variable-speed engines. For constant-speed engines subject to duty cycles that specify normalized speed commands, use the no-load governed speed as the measured f_{ntest}. This is the highest engine speed where an engine outputs zero torque. For variable-speed engines, determine the measured f_{ntest} from the power-versus-speed map, generated according to § 1065.510, as follows:

(1) Based on the map, determine maximum power, P_{max}, and the speed at which maximum power occurred, f_{nPmax}. If maximum power occurs at multiple speeds, take f_{nPmax} as the lowest of these speeds. Divide every recorded power by P_{max} and divide every recorded speed by f_{nPmax}. The result is a normalized power-versus-speed map. Your measured f_{ntest} is the speed at which the sum of the squares of normalized speed and power is maximum. Note that if multiple maximum values are found, f_{ntest} should be taken as the lowest speed of all points with the same maximum sum of squares.

Determine f_{ntest} as follows:

$$f_{ntest} = f_{ni} \text{ at the maximum of } \left(f_{nnormi}^{\ 2} + P_{normi}^{\ 2} \right) \qquad \text{Eq. 1065.610-1}$$

Where:

f_{ntest} = maximum test speed.
i = an indexing variable that represents one recorded value of an engine map.
f_{nnormi} = an engine speed normalized by dividing it by f_{nPmax}.
P_{normi} = an engine power normalized by dividing it by P_{max}.

Example:

(f_{nnorm1} = 1.002, P_{norm1} = 0.978, f_{n1} = 2359.71)
(f_{nnorm2} = 1.004, P_{norm2} = 0.977, f_{n2} = 2364.42)
(f_{nnorm3} = 1.006, P_{norm3} = 0.974, f_{n3} = 2369.13)
($f_{nnorm12}$ + P_{norm1}^2) = (1.002^2 + 0.978^2) = 1.960
(f_{nnorm2}^2 + P_{norm2}^2) = (1.004^2 + 0.977^2) = 1.963
(f_{nnorm3}^2 + P_{norm3}^2) = (1.006^2 + 0.974^2) = 1.961
maximum = 1.963 at i = 2
f_{ntest} = 2364.42 rev/min

(2) For variable-speed engines, transform normalized speeds to reference speeds according to paragraph (c) of this section by using the measured maximum test speed determined according to paragraph (a)(1) of this section—or use your declared maximum test speed, as allowed in § 1065.510.

(3) For constant-speed engines, transform normalized speeds to reference speeds according to paragraph (c) of this section by using the measured no-load governed speed—or use your declared maximum test speed, as allowed in § 1065.510.

(b) *Maximum test torque*, T_{test}. For constant-speed engines, determine the measured T_{test} from the power-versus-speed map, generated according to § 1065.510, as follows:

(1) Based on the map, determine maximum power, P_{max}, and the speed at which maximum power occurs, f_{nPmax}. If maximun power occurs at multiple speeds, take f_{nPmax} as the lowest of these speeds. Divide every recorded power by P_{max} and divide every recorded speed by f_{nPmax}. The result is a normalized power-versus-speed map. Your measured T_{test} is the torque at which the sum of the squares of normalized speed and power is maximum. Note that that if multiple maximum values are found, T_{test} should be taken as the highest torque of all points with the same maximum sum of squares. Determine T_{test} as follows:

$$T_{test} = T_i \text{ at the maximum of } \left(f_{nnormi}{}^2 + P_{normi}{}^2 \right) \qquad \text{Eq. 1065.610-2}$$

Where:

T_{test} = maximum test torque.

Example:

(f_{nnorm1} = 1.002, P_{norm1} = 0.978, T_1 = 722.62 N·m)
(f_{nnorm2} = 1.004, P_{norm2} = 0.977, T_2 = 720.44 N·m)
(f_{nnorm3} = 1.006, P_{norm3} = 0.974, T_3 = 716.80 N·m)
$(f_{nnorm1}{}^2 + P_{norm1}{}^2) = (1.002^2 + 0.978^2) = 1.960$
$(f_{nnorm1}{}^2 + P_{norm1}{}^2) = (1.004^2 + 0.977^2) = 1.963$
$(f_{nnorm1}{}^2 + P_{norm1}{}^2) = (1.006^2 + 0.974^2) = 1.961$
maximum = 1.963 at i = 2
T_{test} = 720.44 N·m

(2) Transform normalized torques to reference torques according to paragraph (d) of this section by using the measured maximum test torque determined according to paragraph (b)(1) of this section—or use your declared maximum test torque, as allowed in § 1065.510.

(c) *Generating reference speed values from normalized duty cycle speeds.* Transform normalized speed values to reference values as follows:

(1) *% speed.* If your normalized duty cycle specifies % speed values, use your warm idle speed and your maximum test speed to transform the duty cycle, as follows:

$$f_{nref} = \%\ speed \cdot (f_{ntest} - f_{nidle}) + f_{nidle}$$

Eq. 1065.610–3

Example:

% speed = 85%
f_{ntest} = 2364 rev/min
f_{nidle} = 650 rev/min
$f_{nref} = 85\% \cdot (2364 - 650) + 650$
f_{nref} = 2107 rev/min

(2) *A, B, and C speeds.* If your normalized duty cycle specifies speeds as A, B, or C values, use your power-versus-speed curve to determine the lowest speed below maximum power at which 50% of maximum power occurs. Denote this value as n_{lo}. Take n_{lo} to be warm idle speed if all power points at speeds below the maximum power speed are higher than 50% of maximum power. Also determine the highest speed above maximum power at which 70% of maximum power occurs. Denote this value as n_{hi}. If all power points at speeds above the maximum power speed are higher than 70% of maximum power, take n_{hi} to be the declared maximum safe engine speed or the declared maximum representative engine speed, whichever is lower. Use n_{hi} and n_{lo} to calculate reference values for A, B, or C speeds as follows:

$$f_{nrefA} = 0.25 \cdot (n_{hi} - n_{lo}) + n_{lo}$$

Eq. 1065.610–4

$$f_{nrefB} = 0.50 \cdot (n_{hi} - nn_{lo}) + n_{lo}$$

Eq. 1065.610–5

$$f_{nrefC} = 0.75 \cdot (n_{hi} - n_{lo}) + n_{lo}$$

Eq. 1065.610–6

Example:

n_{lo} = 1005 rev/min
n_{hi} = 2385 rev/min
$f_{nrefA} = 0.25 \cdot (2385 - 1005) + 1005$
$f_{nrefB} = 0.50 \cdot (2385 - 1005) + 1005$
$f_{nrefC} = 0.75 \cdot (2385 - 1005) + 1005$
f_{nrefA} = 1350 rev/min
f_{nrefB} = 1695 rev/min
f_{nrefC} = 2040 rev/min

(3) *Intermediate speed.* If your normalized duty cycle specifies a speed as ''intermediate speed,'' use your torque-versus-speed curve to determine the speed at which maximum torque occurs. This is peak torque speed. If maximum torque occurs in a flat region of the torque-versus-speed curve, your peak torque speed is the midpoint between the lowest and highest speeds at which the trace reaches the flat region. For purposes of this paragraph (c)(3), a

flat region is one in which measured torque values are within 2.0% of the maximum recorded value. Identify your reference intermediate speed as one of the following values:

(i) Peak torque speed if it is between (60 and 75)% of maximum test speed.

(ii) 60% of maximum test speed if peak torque speed is less than 60% of maximum test speed.

(iii) 75% of maximum test speed if peak torque speed is greater than 75% of maximum test speed.

(d) *Generating reference torques from normalized duty-cycle torques.* Transform normalized torques to reference torques using your map of maximum torque versus speed.

(1) *Reference torque for variable-speed engines.* For a given speed point, multiply the corresponding % torque by the maximum torque at that speed, according to your map. If your engine is subject to a reference duty cycle that specifies negative torque values (*i.e.*, engine motoring), use negative torque for those motoring points (*i.e.*, the motoring torque). If you map negative torque as allowed under §1065.510 (c)(2) and the low-speed governor activates, resulting in positive torques, you may replace those positive motoring mapped torques with negative values between zero and the largest negative motoring torque. For both maximum and motoring torque maps, linearly interpolate mapped torque values to determine torque between mapped speeds. If the reference speed is below the minimum mapped speed (*i.e.*, 95% of idle speed or 95% of lowest required speed, whichever is higher), use the mapped torque at the minimum mapped speed as the reference torque. The result is the reference torque for each speed point.

(2) *Reference torque for constant-speed engines.* Multiply a % torque value by your maximum test torque. The result is the reference torque for each point.

(3) *Required deviations.* We require the following deviations for variable-speed engines intended primarily for propulsion of a vehicle with an automatic transmission where that engine is subject to a transient duty cycle with idle operation. These deviations are intended to produce a more representative transient duty cycle for these applications. For steady-state duty cycles or transient duty cycles with no idle operation, these requirements do not apply. Idle points for steady state duty cycles of such engines are to be run at conditions simulating neutral or park on the transmission.

(i) Zero-percent speed is the warm idle speed measured according to §1065.510(b)(6) with CITT applied, *i.e.*, measured warm idle speed in drive.

(ii) If the cycle begins with a set of contiguous idle points (zero-percent speed, and zero-percent torque), leave the reference torques set to zero for this initial contiguous idle segment. This is to represent free idle operation with the transmission in neutral or park at the start of the transient duty cycle, after the engine is started. If the initial idle segment is longer than 24 s, change the reference torques for the remaining idle points in the initial contiguous idle segment to CITT (*i.e.*, change idle points corresponding to 25 s to the end of the initial idle segment to CITT). This is to represent shifting the transmission to drive.

(iii) For all other idle points, change the reference torque to CITT. This is to represent the transmission operating in drive.

(iv) If the engine is intended primarily for automatic transmissions with a Neutral-When-Stationary feature that automatically shifts the transmission to neutral after the vehicle is stopped for a designated time and automatically shifts back to drive when the operator increases demand (*i.e.*, pushes the accelerator pedal), change the reference torque back to zero for idle points in drive after the designated time.

(v) For all points with normalized speed at or below zero percent and reference torque from zero to CITT, set the reference torque to CITT. This is to provide smoother torque references below idle speed.

(vi) For motoring points, make no changes.

(vii) For consecutive points with reference torques from zero to CITT that immediately follow idle points, change their reference torques to CITT. This is to provide smooth torque transition out of idle operation. This does not apply if the Neutral-When-Stationary

feature is used and the transmission has shifted to neutral.

(viii) For consecutive points with reference torque from zero to CITT that immediately precede idle points, change their reference torques to CITT. This is to provide smooth torque transition into idle operation.

(4) *Permissible deviations for any engine.* If your engine does not operate below a certain minimum torque under normal in-use conditions, you may use a declared minimum torque as the reference value instead of any value denormalized to be less than the declared value. For example, if your engine is connected to a hydrostatic transmission and it has a minimum torque even when all the driven hydraulic actuators and motors are stationary and the engine is at idle, then you may use this declared minimum torque as a reference torque value instead of any reference torque value generated under paragraph (d)(1) or (2) of this section that is between zero and this declared minimum torque.

(e) *Generating reference power values from normalized duty cycle powers.* Transform normalized power values to reference speed and power values using your map of maximum power versus speed.

(1) First transform normalized speed values into reference speed values. For a given speed point, multiply the corresponding % power by the mapped power at maximum test speed, f_{ntest}, unless specified otherwise by the standard-setting part. The result is the reference power for each speed point, P_{ref}. Convert these reference powers to corresponding torques for operator demand and dynamometer control and for duty cycle validation per 1065.514. Use the reference speed associated with each reference power point for this conversion. As with cycles specified with % torque, linearly interpolate between these reference torque values generated from cycles with % power.

(2) Permissible deviations for any engine. If your engine does not operate below a certain power under normal in-use conditions, you may use a declared minimum power as the reference value instead of any value denormalized to be less than the declared value. For example, if your engine is directly connected to a propeller, it may have a minimum power called idle power. In this case, you may use this declared minimum power as a reference power value instead of any reference power value generated per paragraph (e)(1) of this section that is from zero to this declared minimum power.

[73 FR 37324, June 30, 2008, as amended at 73 FR 59330, Oct. 8, 2008; 75 FR 23045, Apr. 30, 2010]

§ 1065.630 1980 international gravity formula.

The acceleration of Earth's gravity, a_g, varies depending on your location. Calculate a_g at your latitude, as follows:

$$a_g = 9.7803267715 \cdot [1 + s$$
$$5.2790414 \cdot 10^{-3} \cdot \sin^2(\theta) +$$
$$2.32718 \cdot 10^{-5} \cdot \sin^4(\theta) +$$
$$1.262 \cdot 10^{-7} \cdot \sin^6(\theta) +$$
$$7 \cdot 10^{-10} \cdot \sin^8(\theta)] \qquad \text{Eq. 1065.630-1}$$

Where:

θ = Degrees north or south latitude.

Example:

θ = 45°

$a_g = 9.7803267715 \cdot (1+$
$5.2790414 \cdot 10^{-3} \cdot \sin^2(45) +$
$2.32718 \cdot 10^{-5} \cdot \sin^4(45) +$
$1.262 \cdot 10^{-7} \cdot \sin^6(45) +$
$7 \cdot 10^{-10} \cdot \sin^8(45)$
$a_g = 9.8178291229$ m/s²

§ 1065.640 Flow meter calibration calculations.

This section describes the calculations for calibrating various flow meters. After you calibrate a flow meter using these calculations, use the calculations described in § 1065.642 to calculate flow during an emission test. Paragraph (a) of this section first describes how to convert reference flow meter outputs for use in the calibration equations, which are presented on a molar basis. The remaining paragraphs describe the calibration calculations that are specific to certain types of flow meters.

(a) *Reference meter conversions.* The calibration equations in this section use molar flow rate, $\dot{n}_{ref}$, as a reference

quantity. If your reference meter outputs a flow rate in a different quantity, such as standard volume rate, $\dot{V}_{stdref}$, actual volume rate, $\dot{V}_{actref}$, or mass rate, $\dot{m}_{ref}$, convert your reference meter output to a molar flow rate using the following equations, noting that while values for volume rate, mass rate, pressure, temperature, and molar mass may change during an emission test, you should ensure that they are as constant as practical for each individual set point during a flow meter calibration:

$$\dot{n}_{ref} = \frac{\dot{V}_{stdref} \cdot P_{std}}{T_{std} \cdot R} = \frac{\dot{V}_{actref} \cdot P_{act}}{T_{act} \cdot R} = \frac{\dot{m}_{ref}}{M_{mix}}$$

Eq. 1065.640–1

Where:

$\dot{n}_{ref}$ = reference molar flow rate.

$\dot{V}_{stdref}$ = reference volume flow rate, corrected to a standard pressure and a standard temperature.

$\dot{V}_{actref}$ = reference volume flow rate at the actual pressure and temperature of the flow rate.

$\dot{m}_{ref}$ = reference mass flow.

P_{std} = standard pressure.

P_{act} = actual pressure of the flow rate.

T_{std} = standard temperature.

T_{act} = actual temperature of the flow rate.

R = molar gas constant.

M_{mix} = molar mass of the flow rate.

Example 1:

$\dot{V}_{stdref}$ = 1000.00 ft³/min = 0.471948 m³/s

P = 29.9213 in Hg @ 32 °F = 101325 Pa

T = 68.0 °F = 293.15 K

R = 8.314472 J/(mol·K)

$$\dot{n}_{ref} = \frac{0.471948 \cdot 101325}{293.15 \cdot 8.314472}$$

$\dot{n}_{ref}$ = 19.619 mol/s

Example 2:

$\dot{m}_{ref}$ = 17.2683 kg/min = 287.805 g/s

$\dot{M}_{mix}$ = 28.7805 g/mol

$$\dot{n}_{ref} = \frac{287.805}{28.7805}$$

$\dot{n}_{ref}$ = 10.0000 mol/s

(b) *PDP calibration calculations.* For each restrictor position, calculate the following values from the mean values determined in § 1065.340, as follows:

(1) PDP volume pumped per revolution, V_{rev} (m³/rev):

$$V_{rev} = \frac{\bar{\dot{n}}_{ref} \cdot R \cdot \bar{T}_{in}}{\bar{P}_{in} \cdot \bar{f}_{nPDP}} \qquad \text{Eq. 1065.640-2}$$

Example:

$\bar{\dot{n}}_{ref}$ = 25.096 mol/s

R = 8.314472 J/(mol·K)

$\bar{T}_{in}$ = 299.5 K

$\bar{P}_{in}$ = 98290 Pa

$\bar{f}_{nPDP}$ = 1205.1 rev/min = 20.085 rev/s

$$V_{rev} = \frac{25.096 \cdot 8.314472 \cdot 299.5}{98290 \cdot 20.085}$$

V_{rev} = 0.03166 m³/rev

(2) PDP slip correction factor, K_s (s/rev):

$$K_s = \frac{1}{\bar{f}_{rPDP}} \cdot \sqrt{\frac{\bar{P}_{out} - \bar{P}_{in}}{\bar{P}_{out}}} \qquad \text{Eq. 1065.640-3}$$

Example:
$\bar{f}_{nPDP}$ = 1205.1 rev/min = 20.085 rev/s
$\bar{P}_{out}$ = 100.103 kPa
$\bar{P}_{in}$= 98.290 kPa

$$K_s = \frac{1}{20.085} \cdot \sqrt{\frac{100.103 - 98.290}{100.103}}$$

K_s = 0.006700 s/rev

(3) Perform a least-squares regression of PDP volume pumped per revolution, V_{rev}, versus PDP slip correction factor, K_s, by calculating slope, a_1, and intercept, a_0, as described in § 1065.602.

(4) Repeat the procedure in paragraphs (b)(1) through (3) of this section for every speed that you run your PDP.

(5) The following example illustrates these calculations:

TABLE 1 OF § 1065.640—EXAMPLE OF PDP CALIBRATION DATA

$\bar{f}_{nPDP}$ (rev/min)	a_1 (m³/min)	a_0 (m³/rev)
755.0	50.43	0.056
987.6	49.86	−0.013
1254.5	48.54	0.028
1401.3	47.30	−0.061

(6) For each speed at which you operate the PDP, use the corresponding slope, a_1, and intercept, a_0, to calculate flow rate during emission testing as described in § 1065.642.

(c) *Venturi governing equations and permissible assumptions.* This section describes the governing equations and permissible assumptions for calibrating a venturi and calculating flow using a venturi. Because a subsonic venturi (SSV) and a critical-flow venturi (CFV) both operate similarly, their governing equations are nearly the same, except for the equation describing their pressure ratio, r (*i.e.*, r_{SSV} versus r_{CFV}). These governing equations assume one-dimensional isentropic inviscid compressible flow of an ideal gas. In paragraph (c)(4) of this section, we describe other assumptions that you may make, depending upon how you conduct your emission tests. If we do not allow you to assume that the measured flow is an ideal gas, the governing equations include a first-order correction for the behavior of a real gas; namely, the compressibility factor, Z. If good engineering judgment dictates using a value other than Z=1, you may either use an appropriate equation of state to determine values of Z as a function of measured pressures and temperatures, or you may develop your own calibration equations based on good engineering judgment. Note that the equation for the flow coefficient, C_f, is based on the ideal gas assumption that the isentropic exponent, γ, is equal to the ratio of specific heats, C_p/C_v. If good engineering judgment dictates using a real gas isentropic exponent, you may either use an appropriate equation of state to determine values of γ as a function of measured pressures and temperatures, or you may develop your own calibration equations based on good engineering judgment. Calculate molar flow rate, $\dot{n}$, as follows:

$$\dot{n} = C_d \cdot C_f \cdot \frac{A_t \cdot p_{in}}{\sqrt{Z \cdot M_{mix} \cdot R \cdot T_{in}}} \qquad \text{Eq. 1065.640-4}$$

Where:

C_d = Discharge coefficient, as determined in paragraph (c)(1) of this section.

C_f = Flow coefficient, as determined in paragraph (c)(2) of this section.

A_t = Venturi throat cross-sectional area.

p_{in} = Venturi inlet absolute static pressure.

Z = Compressibility factor.

M_{mix} = Molar mass of gas mixture.

R = Molar gas constant.

T_{in} = Venturi inlet absolute temperature.

(1) Using the data collected in § 1065.340, calculate C_d using the following equation:

$$C_d = \dot{n}_{ref} \cdot \frac{\sqrt{Z \cdot M_{mix} \cdot R \cdot T_{in}}}{C_f \cdot A_t \cdot p_{in}} \qquad \text{Eq. 1065.640-5}$$

Where:

$\dot{n}_{ref}$ = A reference molar flow rate.

(2) Determine C_f using one of the following methods:

(i) For CFV flow meters only, determine C_{fCFV} from the following table based on your values for β and γ, using linear interpolation to find intermediate values:

TABLE 2 OF § 1065.640—C_{fCFV} VERSUS β AND γ FOR CFV FLOW METERS

C_{fCFV}		
β	γ_{exh} = 1.385	γ_{dexh} = γ_{air} = 1.399
0.000	0.6822	0.6846
0.400	0.6857	0.6881
0.500	0.6910	0.6934
0.550	0.6953	0.6977
0.600	0.7011	0.7036
0.625	0.7047	0.7072
0.650	0.7089	0.7114

TABLE 2 OF § 1065.640—C_{fCFV} VERSUS β AND γ FOR CFV FLOW METERS—Continued

C_{fCFV}		
β	γ_{exh} = 1.385	γ_{dexh} = γ_{air} = 1.399
0.675	0.7137	0.7163
0.700	0.7193	0.7219
0.720	0.7245	0.7271
0.740	0.7303	0.7329
0.760	0.7368	0.7395
0.770	0.7404	0.7431
0.780	0.7442	0.7470
0.790	0.7483	0.7511
0.800	0.7527	0.7555
0.810	0.7573	0.7602
0.820	0.7624	0.7652
0.830	0.7677	0.7707
0.840	0.7735	0.7765
0.850	0.7798	0.7828

(ii) For any CFV or SSV flow meter, you may use the following equation to calculate C_f:

$$C_f = \left[\frac{2 \cdot \gamma \cdot \left(r^{\frac{\gamma-1}{\gamma}} - 1 \right)}{(\gamma - 1) \cdot \left(\beta^4 - r^{\frac{-2}{\gamma}} \right)} \right]^{\frac{1}{2}} \qquad \text{Eq. 1065.640-6}$$

Where:

γ = isentropic exponent. For an ideal gas, this is the ratio of specific heats of the gas mixture, C_p/C_v.

r = Pressure ratio, as determined in paragraph (c)(3) of this section.

β = Ratio of venturi throat to inlet diameters.

(3) Calculate r as follows:

(i) For SSV systems only, calculate r_{SSV} using the following equation:

$$r_{SSV} = 1 - \frac{\Delta p_{SSV}}{p_{in}} \qquad \text{Eq. 1065.640-7}$$

Where:

Δp_{SSV} = Differential static pressure; venturi inlet minus venturi throat.

(ii) For CFV systems only, calculate r_{CFV} iteratively using the following equation:

$$r_{CFV}^{\frac{1-\gamma}{\gamma}} + \left(\frac{\gamma-1}{2}\right) \cdot \beta^4 \cdot r_{CFV}^{\frac{2}{\gamma}} = \frac{\gamma+1}{2} \qquad \text{Eq. 1065.640-8}$$

(4) You may make any of the following simplifying assumptions of the governing equations, or you may use good engineering judgment to develop more appropriate values for your testing:

(i) For emission testing over the full ranges of raw exhaust, diluted exhaust and dilution air, you may assume that the gas mixture behaves as an ideal gas: $Z = 1$.

(ii) For the full range of raw exhaust you may assume a constant ratio of specific heats of γ =1.385.

(iii) For the full range of diluted exhaust and air (e.g., calibration air or dilution air), you may assume a constant ratio of specific heats of γ = 1.399.

(iv) For the full range of diluted exhaust and air, you may assume the molar mass of the mixture is a function only of the amount of water in the dilution air or calibration air, x_{H2O}, determined as described in §1065.645, as follows:

$$M_{mix} = M_{air} \cdot \left(1 - x_{H2O}\right) + M_{H2O} \cdot x_{H2O} \qquad \text{Eq. 1065.640-9}$$

Example:

M_{air} = 28.96559 g/mol
x_{H2O} = 0.0169 mol/mol
M_{H2O} = 18.01528 g/mol
M_{mix} = 28.96559 · (1 0.0169) + 18.01528 · 0.0169
M_{mix} = 28.7805 g/mol

(v) For the full range of diluted exhaust and air, you may assume a constant molar mass of the mixture, M_{mix}, for all calibration and all testing as long as your assumed molar mass differs no more than ±1% from the estimated minimum and maximum molar mass during calibration and testing. You may assume this, using good engineering judgment, if you sufficiently control the amount of water in calibration air and in dilution air or if you remove sufficient water from both calibration air and dilution air. The following table gives examples of permissible ranges of dilution air dewpoint versus calibration air dewpoint:

TABLE 3 OF § 1065.640—EXAMPLES OF DILUTION AIR AND CALIBRATION AIR DEWPOINTS AT WHICH YOU MAY ASSUME A CONSTANT M_{mix}.

If calibration T_{dew} (°C) is...	assume the following constant M_{mix} (g/mol)...	for the following ranges of T_{dew} (°C) during emission tests [a]
dry	28.96559	dry to 18.
0	28.89263	dry to 21.
5	28.86148	dry to 22.
10	28.81911	dry to 24.
15	28.76224	dry to 26.
20	28.68685	−8 to 28.
25	28.58806	12 to 31.
30	28.46005	23 to 34.

[a] Range valid for all calibration and emission testing over the atmospheric pressure range (80.000 to 103.325) kPa.

(5) The following example illustrates the use of the governing equations to calculate the discharge coefficient, C_d, of an SSV flow meter at one reference flow meter value. Note that calculating C_d for a CFV flow meter would be similar, except that C_f would be determined from Table 2 of this section or calculated iteratively using values of β and γ as described in paragraph (c)(2) of this section.

Example:

$\dot{n}_{ref}$= 57.625 mol/s

Z = 1

M_{mix} = 28.7805 g/mol = 0.0287805 kg/mol

R = 8.314472 J/(mol·K)

T_{in} = 298.15 K

A_t = 0.01824 m²

p_{in} = 99132.0 Pa

γ = 1.399

β = 0.8

Δp = 2.312 kPa

$$r_{SSV} = 1 - \frac{2.312}{99.132} = 0.977$$

$$C_f = \left[\frac{2 \cdot 1.399 \cdot \left(0.977^{\frac{1.399-1}{1.399}} - 1 \right)}{(1.399-1) \cdot \left(0.8^4 - 0.977^{\frac{-2}{1.399}} \right)} \right]^{\frac{1}{2}}$$

C_f = 0.274

$$C_d = 57.625 \cdot \frac{\sqrt{1 \cdot 0.0287805 \cdot 8.314472 \cdot 298.15}}{0.274 \cdot 0.01824 \cdot 99132.0}$$

C_d = 0.982

(d) *SSV calibration.* Perform the following steps to calibrate an SSV flow meter:

(1) Calculate the Reynolds number, $Re^{\#}$, for each reference molar flow rate, using the throat diameter of the venturi, d_t. Because the dynamic viscosity, μ, is needed to compute $Re^{\#}$, you may

use your own fluid viscosity model to determine μ for your calibration gas (usually air), using good engineering judgment. Alternatively, you may use the Sutherland three-coefficient viscosity model to approximate μ, as shown in the following sample calculation for $Re^{\#}$:

$$Re^{\#} = \frac{4 \cdot M_{\text{mix}} \cdot \dot{n}_{\text{ref}}}{\pi \cdot d_{\text{t}} \cdot \mu} \qquad \text{Eq. 1065.640-10}$$

Where, using the Sutherland three-coefficient viscosity model:

$$\mu = \mu_0 \cdot \left(\frac{T_{\text{in}}}{T_0}\right)^{\frac{3}{2}} \cdot \left(\frac{T_0 + S}{T_{\text{in}} + S}\right) \qquad \text{Eq. 1065.640-11}$$

Where:

μ = Dynamic viscosity of calibration gas.

μ_0 = Sutherland reference viscosity.

T_0 = Sutherland reference temperature.

S = Sutherland constant.

TABLE 4 OF § 1065.640—SUTHERLAND THREE-COEFFICIENT VISCOSITY MODEL PARAMETERS

Gas [a]	μ_o	T_o	S	Temp range within ± 2% error	Pressure limit
	kg/(m·s)	K	K	K	kPa
Air	$1.716 \cdot 10^{-5}$	273	111	170 to 1,900	≤ 1,800
CO_2	$1.370 \cdot 10^{-5}$	273	222	190 to 1,700	≤ 3,600
H_2O	$1.12 \cdot 10^{-5}$	350	1,064	360 to 1,500	≤ 10,000
O_2	$1.919 \cdot 10^{-5}$	273	139	190 to 2,000	≤ 2,500
N_2	$1.663 \cdot 10^{-5}$	273	107	100 to 1,500	≤ 1,600

[a] Use tabulated parameters only for the pure gases, as listed. Do not combine parameters in calculations to calculate viscosities of gas mixtures.

Example:

$\mu_0 = 1.716 \cdot 10^{-5}$ kg/(m·s)

$T_0 = 273.11$ K

$S = 110.56$ K

$$\mu = 1.716 \cdot 10^{-5} \cdot \left(\frac{298.15}{273.11}\right)^{\frac{3}{2}} \cdot \left(\frac{273.11 + 110.56}{298.15 + 110.56}\right)$$

$\mu = 1.837 \cdot 10^{-5}$ kg/(m·s)

$M_{\text{mix}} = 28.7805$ g/mol

$\dot{n}_{\text{ref}} = 57.625$ mol/s

$d_{\text{t}} = 152.4$ mm

$T_{\text{in}} = 298.15$ K

$$Re^{\#} = \frac{4 \cdot 28.7805 \cdot 57.625}{3.14159 \cdot 152.4 \cdot 1.837 \cdot 10^{-5}}$$

$Re^{\#} = 7.541 \cdot 10^5$

(2) Create an equation for C_d versus $Re^{\#}$, using paired values of ($Re^{\#}$, C_d). For the equation, you may use any mathematical expression, including a polynomial or a power series. The following equation is an example of a commonly used mathematical expression for relating C_d and $Re^{\#}$:

$$C_d = a_0 - a_1 \cdot \sqrt{\frac{10^6}{Re^{\#}}} \qquad \text{Eq. 1065.640-12}$$

(3) Perform a least-squares regression analysis to determine the best-fit coefficients to the equation and calculate the equation's regression statistics, *SEE* and r^2, according to § 1065.602.

(4) If the equation meets the criteria of $SEE \leq 0.5\% \cdot \dot{n}_{refmax}$ and $r^2 \geq 0.995$, you may use the equation to determine C_d for emission tests, as described in § 1065.642.

(5) If the *SEE* and r^2 criteria are not met, you may use good engineering judgment to omit calibration data points to meet the regression statistics. You must use at least seven calibration data points to meet the criteria.

(6) If omitting points does not resolve outliers, take corrective action. For example, select another mathematical expression for the C_d versus $Re^{\#}$ equation, check for leaks, or repeat the calibration process. If you must repeat the process, we recommend applying tighter tolerances to measurements and allowing more time for flows to stabilize.

(7) Once you have an equation that meets the regression criteria, you may use the equation only to determine flow rates that are within the range of the reference flow rates used to meet the C_d versus $Re^{\#}$ equation's regression criteria.

(e) *CFV calibration.* Some CFV flow meters consist of a single venturi and some consist of multiple venturis, where different combinations of venturis are used to meter different flow rates. For CFV flow meters that consist of multiple venturis, either calibrate each venturi independently to determine a separate discharge coefficient, C_d, for each venturi, or calibrate each combination of venturis as one venturi. In the case where you calibrate a combination of venturis, use the sum of the active venturi throat areas as A_t, the square root of the sum of the squares of the active venturi throat diameters as d_t, and the ratio of the venturi throat to inlet diameters as the ratio of the square root of the sum of the active venturi throat diameters (d_t) to the diameter of the common entrance to all of the venturis (D). To determine the C_d for a single venturi or a single combination of venturis, perform the following steps:

(1) Use the data collected at each calibration set point to calculate an individual C_d for each point using Eq. 1065.640–4.

(2) Calculate the mean and standard deviation of all the C_d values according to Eqs. 1065.602–1 and 1065.602–2.

(3) If the standard deviation of all the C_d values is less than or equal to 0.3% of the mean C_d, use the mean C_d in Eq 1065.642–6, and use the CFV only down to the lowest r measured during calibration using the following equation:

$$r = 1 - \frac{\Delta p_{CFV}}{p_{in}} \qquad \text{Eq. 1065.640-13}$$

Where:

Δp_{CFV} = Differential static pressure; venturi inlet minus venturi outlet.

(4) If the standard deviation of all the C_d values exceeds 0.3% of the mean C_d, omit the C_d values corresponding to the data point collected at the lowest r measured during calibration.

(5) If the number of remaining data points is less than seven, take corrective action by checking your calibration data or repeating the calibration process. If you repeat the calibration process, we recommend checking for leaks, applying tighter tolerances to

measurements and allowing more time for flows to stabilize.

(6) If the number of remaining C_d values is seven or greater, recalculate the mean and standard deviation of the remaining C_d values.

(7) If the standard deviation of the remaining C_d values is less than or equal to 0.3% of the mean of the remaining C_d, use that mean C_d in Eq. 1065.642–6, and use the CFV values only down to the lowest r associated with the remaining C_d.

(8) If the standard deviation of the remaining C_d still exceeds 0.3% of the mean of the remaining C_d values, repeat the steps in paragraph (e)(4) through (8) of this section.

[70 FR 40516, July 13, 2005, as amended at 73 FR 37326, June 30, 2008; 73 FR 59331, Oct. 8, 2008; 75 FR 23045, Apr. 30, 2010; 75 FR 68464, Nov. 8, 2010]

§ 1065.642 SSV, CFV, and PDP molar flow rate calculations.

This section describes the equations for calculating molar flow rates from various flow meters. After you calibrate a flow meter according to § 1065.640, use the calculations described in this section to calculate flow during an emission test.

(a) *PDP molar flow rate.* Based upon the speed at which you operate the PDP for a test interval, select the corresponding slope, a_1, and intercept, a_0, as calculated in § 1065.640, to calculate molar flow rate, $\dot{n}$ as follows:

$$\dot{n} = f_{\mathrm{nPDP}} \cdot \frac{p_{\mathrm{in}} \cdot V_{\mathrm{rev}}}{R \cdot T_{\mathrm{in}}} \qquad \text{Eq. 1065.642-1}$$

Where:

$$V_{\mathrm{rev}} = \frac{a_1}{\bar{f}_{\mathrm{nPDP}}} \cdot \sqrt{\frac{p_{\mathrm{out}} - p_{\mathrm{in}}}{p_{\mathrm{out}}}} + a_0 \qquad \text{Eq. 1065.642-2}$$

Example:

a_1 = 50.43 (m³/min) = 0.8405 (m³/s)
$\bar{f}_{\mathrm{nPDP}}$ = 755.0 rev/min = 12.58 rev/s
p_{out} = 99950 Pa
p_{in} = 98575 Pa
a_0 = 0.056 (m³/rev)
R = 8.314472 J/(mol·K)
T_{in} = 323.5 K
C_p = 1000 (J/m³)/kPa
C_t = 60 s/min

$$V_{\mathrm{rev}} = \frac{0.8405}{12.58} \cdot \sqrt{\frac{99950 - 98575}{99950}} + 0.056$$

V_{rev} = 0.06383 m³/rev

$$\dot{n} = 12.58 \cdot \frac{98575 \cdot 0.06383}{8.314472 \cdot 323.5}$$

$\dot{n}$ = 29.428 mol/s

(b) *SSV molar flow rate*. Based on the C_d versus $Re^{\#}$ equation you determined according to §1065.640, calculate SSV molar flow rate, $\dot{n}$ during an emission test as follows:

$$\dot{n} = C_d \cdot C_f \cdot \frac{A_t \cdot p_{in}}{\sqrt{Z \cdot M_{mix} \cdot R \cdot T_{in}}} \qquad \text{Eq. 1065.642-3}$$

Example:
A_t = 0.01824 m²
p_{in} = 99132 Pa
Z = 1
M_{mix} = 28.7805 g/mol = 0.0287805 kg/mol
R = 8.314472 J/(mol·K)
T_{in} = 298.15 K
$Re^{\#}$ = 7.232·10⁵
γ = 1.399
β = 0.8
Δp = 2.312 kPa
Using Eq. 1065.640–7,
r_{ssv} = 0.997
Using Eq. 1065.640–6,
C_f = 0.274
Using Eq. 1065.640–5,
C_d = 0.990

$$\dot{n} = 0.990 \cdot 0.274 \cdot \frac{0.01824 \cdot 99132}{\sqrt{1 \cdot 0.0287805 \cdot 8.314472 \cdot 298.15}}$$

$\dot{n}$ = 58.173 mol/s

(c) *CFV molar flow rate*. Some CFV flow meters consist of a single venturi and some consist of multiple venturis, where different combinations of venturis are used to meter different flow rates. If you use multiple venturis and you calibrated each venturi independently to determine a separate discharge coefficient, C_d, for each venturi, calculate the individual molar flow rates through each venturi and sum all their flow rates to determine $\dot{n}$. If you use multiple venturis and you calibrated each combination of venturis, calculate $\dot{n}$ as using the sum of the active venturi throat areas as A_t, the square root of the sum of the squares of the active venturi throat diameters as d_t, and the ratio of the venturi throat to inlet diameters as the ratio of the square root of the sum of the active venturi throat diameters, d_t, to the diameter of the common entrance to all of the venturis, D. To calculate the molar flow rate through one venturi or one combination of venturis, use its respective mean C_d and other constants you determined according to §1065.640 and calculate its molar flow rate $\dot{n}$ during an emission test, as follows:

$$\dot{n} = C_d \cdot C_f \cdot \frac{A_t \cdot p_{in}}{\sqrt{Z \cdot M_{mix} \cdot R \cdot T_{in}}} \qquad \text{Eq. 1065.642-4}$$

Example:
C_d = 0.985
C_f = 0.7219
A_t = 0.00456 m²
p_{in} = 98836 Pa
Z = 1
M_{mix} = 28.7805 g/mol = 0.0287805 kg/mol
R = 8.314472 J/(mol·K)
T_{in} = 378.15 K

$$\dot{n} = 0.985 \cdot 0.7219 \cdot \frac{0.00456 \cdot 98836}{\sqrt{1 \cdot 0.0287805 \cdot 8.314472 \cdot 378.15}}$$

$\dot{n}$ = 33.690 mol/s

[75 FR 23047, Apr. 30, 2010, as amended at 75 FR 68464, Nov. 8, 2010]

§ 1065.644 Vacuum-decay leak rate.

This section describes how to calculate the leak rate of a vacuum-decay leak verification, which is described in § 1065.345(e). Use Eq. 1065.644–1 to calculate the leak rate, $\dot{n}_{leak}$, and compare it to the criterion specified in § 1065.345(e).

$$\dot{n}_{leak} = \frac{V_{vac}}{R} \cdot \frac{\left(\frac{p_2}{T_2} - \frac{p_1}{T_1}\right)}{(t_2 - t_1)} \quad \text{Eq. 1065.644-1}$$

Where:

V_{vac} = geometric volume of the vacuum-side of the sampling system.

R = molar gas constant.

p_2 = Vacuum-side absolute pressure at time t_2.

T_2 = Vacuum-side absolute temperature at time t_2.

p_1 = Vacuum-side absolute pressure at time t^1.

T_1 = Vacuum-side absolute temperature at time t_1.

t_2 = time at completion of vacuum-decay leak verification test.

t_1 = time at start of vacuum-decay leak verification test.

Example:

V_{vac} = 2.0000 L = 0.00200 m³
R = 8.314472 J/(mol·K)
p_2 = 50.600 kPa = 50600 Pa
T_2 = 293.15 K
p_1 = 25.300 kPa = 25300 Pa
T_1 = 293.15 K
t_2 = 10:57:35 AM
t_1 = 10:56:25 AM

$$\dot{n}_{leak} = \frac{0.0002}{8.314472} \cdot \frac{\left(\frac{50600}{293.15} - \frac{25300}{293.15}\right)}{(10:57:35 - 10:56:25)}$$

$$\dot{n}_{leak} = \frac{0.00200}{8.314472} \cdot \frac{86.304}{70}$$

$$\dot{n}_{leak} = 0.00030 \text{ mol/s}$$

[73 FR 37327, June 30, 2008]

§ 1065.645 Amount of water in an ideal gas.

This section describes how to determine the amount of water in an ideal gas, which you need for various performance verifications and emission calculations. Use the equation for the vapor pressure of water in paragraph (a) of this section or another appropriate equation and, depending on whether you measure dewpoint or relative humidity, perform one of the calculations in paragraph (b) or (c) of this section.

(a) *Vapor pressure of water*. Calculate the vapor pressure of water for a given saturation temperature condition, T_{sat}, as follows, or use good engineering judgment to use a different relationship of the vapor pressure of water to a given saturation temperature condition:

(1) For humidity measurements made at ambient temperatures from (0 to 100) °C, or for humidity measurements

made over super-cooled water at ambient temperatures from (−50 to 0) °C, use the following equation:

$$\log_{10}\left(p_{H2O}\right)=10.79574\cdot\left(1-\frac{273.16}{T_{sat}}\right)-5.02800\cdot\log_{10}\left(\frac{T_{sat}}{273.16}\right)+1.50475\cdot10^{-4}\cdot\left(1-10^{-8.2969\cdot\left(\frac{T_{sat}}{273.16}-1\right)}\right)$$

$$+0.42873\cdot10^{-3}\cdot\left(10^{4.76955\cdot\left(1-\frac{273.16}{T_{sat}}\right)}-1\right)-0.2138602 \qquad \text{Eq. 1065.645-1}$$

Where:

p_{H20} = vapor pressure of water at saturation temperature condition, kPa.

T_{sat} = saturation temperature of water at measured conditions, K.

Example:

T_{sat} = 9.5 °C

T_{dsat} = 9.5 + 273.15 = 282.65 K

$$\log_{10}\left(p_{H2O}\right)=10.79574\cdot\left(1-\frac{273.16}{282.65}\right)-5.02800\cdot\log_{10}\left(\frac{282.65}{273.16}\right)+1.50475\cdot10^{-4}\cdot\left(1-10^{-8.2969\cdot\left(\frac{282.65}{273.16}-1\right)}\right)$$

$$+0.42873\cdot10^{-3}\cdot\left(10^{4.76955\left(1-\frac{273.16}{282.65}\right)}-1\right)+0.2138602$$

$\log_{10}(p_{H20})$ = 0.074297

$p_{H20} = 10^{0.074297}$ = 1.186581 kPa

(2) For humidity measurements over ice at ambient temperatures from (−100 to 0) °C, use the following equation:

$$\log_{10}\left(p_{sat}\right)=-9.096853\cdot\left(\frac{273.16}{T_{sat}}-1\right)-3.566506\cdot\log_{10}\left(\frac{273.16}{T_{sat}}\right)+0.876812\cdot\left(1-\frac{T_{sat}}{273.16}\right)-0.2138602 \qquad \text{Eq. 1065.645-2}$$

Example:

T_{ice} = −15.4 °C

T_{ice} = −15.4 + 273.15 = 257.75 K

$$\log_{10}\left(p_{sat}\right)=-9.096853\cdot\left(\frac{273.16}{257.75}-1\right)-3.566506\cdot\log_{10}\left(\frac{273.16}{257.75}\right)+0.876812\cdot\left(1-\frac{257.75}{273.16}\right)-0.2138602$$

$\log_{10}(p_{H20})$ = −0.798207

$p_{H20} = 10^{0.79821}$ = 0.159145 kPa

(b) *Dewpoint*. If you measure humidity as a dewpoint, determine the amount of water in an ideal gas, x_{H20}, as follows:

$$x_{H2O} = \frac{p_{H2O}}{p_{abs}} \qquad \text{Eq. 1065.645-3}$$

Where:
x_{H20} = amount of water in an ideal gas.
p_{H20} = water vapor pressure at the measured dewpoint, $T_{sat} = T_{dew}$.
p_{abs} = wet static absolute pressure at the location of your dewpoint measurement.
Example::
p_{abs} = 99.980 kPa
$T_{sat} = T_{dew}$ = 9.5 °C
Using Eq. 1065.645–1,
p_{H20} = 1.186581 kPa
x_{H2O} = 1.186581/99.980
x_{H2O} = 0.011868 mol/mol

(c) *Relative humidity*. If you measure humidity as a relative humidity, *RH*%, determine the amount of water in an ideal gas, $x_{H2O,}$ as follows:

$$x_{H2O} = \frac{RH\% \cdot p_{H2O}}{p_{abs}} \qquad \text{Eq. 1065.645-4}$$

Where:
x_{H20} = amount of water in an ideal gas.
RH% = relative humidity.
p_{H20} = water vapor pressure at 100% relative humidity at the location of your relative humidity measurement, $T_{sat} = T_{amb}$.
p_{abs} = wet static absolute pressure at the location of your relative humidity measurement.
Example:
RH% = 50.77%
p_{abs} = 99.980 kPa
$T_{sat} = T_{amb}$ = 20 °C
Using Eq. 1065.645–1,
p_{H20} = 2.3371 kPa
x_{H2O} = (50.77% · 2.3371)/99.980
x_{H2O} = 0.011868 mol/mol

[73 FR 37327, June 30, 2008, as amended at 73 FR 59331, Oct. 8, 2008; 75 FR 23048, Apr. 30, 2010]

§ 1065.650 Emission calculations.

(a) *General*. Calculate brake-specific emissions over each applicable duty cycle or test interval. For test intervals with zero work (or power), calculate the emission mass (or mass rate), but do not calculate brake-specific emissions. For duty cycles with multiple test intervals, refer to the standard-setting part for calculations you need to determine a composite result, such as a calculation that weights and sums the results of individual test intervals in a duty cycle. If the standard-setting part does not include those calculations, use the equations in paragraph (g) of this section. This section is written based on rectangular integration, where each indexed value (*i.e.*, "$_i$") represents (or approximates) the mean value of the parameter for its respective time interval, delta-t. You may also integrate continuous signals using trapezoidal integration consistent with good engineering judgment.

(b) *Brake-specific emissions over a test interval*. We specify three alternative ways to calculate brake-specific emissions over a test interval, as follows:

(1) For any testing, you may calculate the total mass of emissions, as described in paragraph (c) of this section, and divide it by the total work generated over the test interval, as described in paragraph (d) of this section, using the following equation:

$$e = \frac{m}{W} \qquad \text{Eq. 1065.650-1}$$

Example:

m_{NOx} = 64.975 g

W = 25.783 kW·hr
e_{NOx} = 64.975/25.783
e_{NOx} = 2.520 g/(kW·hr)

(2) For discrete-mode steady-state testing, you may calculate the brake-specific emissions over a test interval using the ratio of emission mass rate to power, as described in paragraph (e) of this section, using the following equation:

$$e = \frac{\bar{\dot{m}}}{\bar{P}} \qquad \text{Eq. 1065.650-2}$$

(3) For field testing, you may calculate the ratio of total mass to total work, where these individual values are determined as described in paragraph (f) of this section. You may also use this approach for laboratory testing, consistent with good engineering judgment. Good engineering judgment dictates that this method not be used if there are any work flow paths described in §1065.210 that cross the system boundary, other than the primary output shaft (crankshaft). This is a special case in which you use a signal linearly proportional to raw exhaust molar flow rate to determine a value proportional to total emissions. You then use the same linearly proportional signal to determine total work using a chemical balance of fuel, intake air, and exhaust as described in §1065.655, plus information about your engine's brake-specific fuel consumption. Under this method, flow meters need not meet accuracy specifications, but they must meet the applicable linearity and repeatability specifications in subpart D or subpart J of this part. The result is a brake-specific emission value calculated as follows:

$$e = \frac{\tilde{m}}{\tilde{W}} \qquad \text{Eq. 1065.650-3}$$

Example:

$\tilde{m}$ = 805.5 g
$\tilde{W}$ = 52.102 kW·hr
e_{CO} = 805.5/52.102
e_{CO} = 2.520 g/(kW·hr)

(c) *Total mass of emissions over a test interval.* To calculate the total mass of an emission, multiply a concentration by its respective flow. For all systems, make preliminary calculations as described in paragraph (c)(1) of this section, then use the method in paragraphs (c)(2) through (4) of this section that is appropriate for your system. Calculate the total mass of emissions as follows:

(1) *Concentration corrections.* Perform the following sequence of preliminary calculations on recorded concentrations:

(i) Correct all THC and CH_4 concentrations, including continuous readings, sample bags readings, and dilution air background readings, for initial contamination, as described in §1065.660(a).

(ii) Correct all concentrations measured on a ''dry'' basis to a ''wet'' basis, including dilution air background concentrations, as described in §1065.659.

(iii) Calculate all THC and NMHC concentrations, including dilution air background concentrations, as described in §1065.660.

(iv) For emission testing with an oxygenated fuel, calculate any HC concentrations, including dilution air background concentrations, as described in §1065.665. See subpart I of this part for testing with oxygenated fuels.

(v) Correct all the NO_X concentrations, including dilution air background concentrations, for intake-air humidity as described in §1065.670.

(vi) Compare the background corrected mass of NMHC to background corrected mass of THC. If the background corrected mass of NMHC is greater than 0.98 times the background corrected mass of THC, take the background corrected mass of NMHC to be 0.98 times the background corrected mass of THC. If you omit the NMHC calculations as described in § 1065.660(b)(1), take the background corrected mass of NMHC to be 0.98 times the background corrected mass of THC.

(vii) Calculate brake-specific emissions before and after correcting for drift, including dilution air background concentrations, according to § 1065.672.

(2) *Continuous sampling*. For continuous sampling, you must frequently record a continuously updated concentration signal. You may measure this concentration from a changing flow rate or a constant flow rate (including discrete-mode steady-state testing), as follows:

(i) *Varying flow rate*. If you continuously sample from a changing exhaust flow rate, time align and then multiply concentration measurements by the flow rate from which you extracted it. Use good engineering judgment to time align flow and concentration data to match transformation time, t_{50}, to within ±1 s. We consider the following to be examples of changing flows that require a continuous multiplication of concentration times molar flow rate: Raw exhaust, exhaust diluted with a constant flow rate of dilution air, and CVS dilution with a CVS flowmeter that does not have an upstream heat exchanger or electronic flow control. This multiplication results in the flow rate of the emission itself. Integrate the emission flow rate over a test interval to determine the total emission. If the total emission is a molar quantity, convert this quantity to a mass by multiplying it by its molar mass, M. The result is the mass of the emission, m. Calculate m for continuous sampling with variable flow using the following equations:

$$m = M \cdot \sum_{i=1}^{N} x_i \cdot \dot{n}_i \cdot \Delta t \qquad \text{Eq. 1065.650-4}$$

Where:

$$\Delta t = 1/f_{\text{record}} \qquad \text{Eq. 1065.650-5}$$

Example:

M_{NMHC} = 13.875389 g/mol
N = 1200
x_{NMHC1} = 84.5 μmol/mol = 84.5 · 10^{-6} mol/mol
x_{NMHC2} = 86.0 μmol/mol = 86.0 · 10^{-6} mol/mol
$\dot{n}_{\text{exh1}}$ = 2.876 mol/s
$\dot{n}_{\text{exh2}}$ = 2.224 mol/s
f_{record} = 1 Hz
Using Eq. 1065.650–5,
Δt = 1/1 =1 s
m_{NMHC} = 13.875389 · (84.5 · 10^{-6} · 2.876 + 86.0 · 10^{-6} · 2.224 + … + $x_{\text{NMHC1200}} \cdot \dot{n}_{\text{exh}}$) · 1
m_{NMHC} = 25.53 g

(ii) *Constant flow rate*. If you continuously sample from a constant exhaust flow rate, use the same emission calculations described in paragraph (c)(2)(i) of this section or calculate the mean or flow-weighted concentration recorded over the test interval and treat the mean as a batch sample, as described in paragraph (c)(3)(ii) of this section. We consider the following to be examples of constant exhaust flows: CVS diluted exhaust with a CVS flowmeter that has either an upstream heat exchanger, electronic flow control, or both.

(3) *Batch sampling*. For batch sampling, the concentration is a single value from a proportionally extracted

batch sample (such as a bag, filter, impinger, or cartridge). In this case, multiply the mean concentration of the batch sample by the total flow from which the sample was extracted. You may calculate total flow by integrating a changing flow rate or by determining the mean of a constant flow rate, as follows:

(i) *Varying flow rate.* If you collect a batch sample from a changing exhaust flow rate, extract a sample proportional to the changing exhaust flow rate. We consider the following to be examples of changing flows that require proportional sampling: Raw exhaust, exhaust diluted with a constant flow rate of dilution air, and CVS dilution with a CVS flowmeter that does not have an upstream heat exchanger or electronic flow control. Integrate the flow rate over a test interval to determine the total flow from which you extracted the proportional sample. Multiply the mean concentration of the batch sample by the total flow from which the sample was extracted. If the total emission is a molar quantity, convert this quantity to a mass by multiplying it by its molar mass, M. The result is the mass of the emission, m. In the case of PM emissions, where the mean PM concentration is already in units of mass per mole of sample, $\bar{M}_{PM}$, simply multiply it by the total flow. The result is the total mass of PM, m_{PM}. Calculate m for batch sampling with variable flow using the following equation:

$$m = M \cdot \bar{x} \cdot \sum_{i=1}^{N} \dot{n}_i \cdot \Delta t \qquad \text{Eq. 1065.650-6}$$

Example:

M_{NOx} = 46.0055 g/mol
N = 9000
$\bar{x}_{NOx}$ = 85.6 μmol/mol = 85.6 · 10^{-6} mol/mol
$\dot{n}_{dexh1}$ = 25.534 mol/s
$\dot{n}_{dexh2}$ = 26.950 mol/s
f_{record} = 5 Hz
Using Eq. 1065.650–5,
Δt = 1/5 = 0.2
m_{NOx} = 46.0055 · 85.6 · 10^{-6} · (25.534 + 26.950 + … + $\dot{n}_{exh9000}$) · 0.2
m_{NOx} = 4.201 g

(ii) *Constant flow rate.* If you batch sample from a constant exhaust flow rate, extract a sample at a proportional or constant flow rate. We consider the following to be examples of constant exhaust flows: CVS diluted exhaust with a CVS flow meter that has either an upstream heat exchanger, electronic flow control, or both. Determine the mean molar flow rate from which you extracted the constant flow rate sample. Multiply the mean concentration of the batch sample by the mean molar flow rate of the exhaust from which the sample was extracted, and multiply the result by the time of the test interval. If the total emission is a molar quantity, convert this quantity to a mass by multiplying it by its molar mass, M. The result is the mass of the emission, m. In the case of PM emissions, where the mean PM concentration is already in units of mass per mole of sample, $\bar{M}_{PM}$, simply multiply it by the total flow, and the result is the total mass of PM, m_{PM}. Calculate m for sampling with constant flow using the following equations:

$$m = M \cdot \bar{x} \cdot \bar{\dot{n}} \cdot \Delta t \qquad \text{Eq. 1065.650-7}$$

and for PM or any other analysis of a batch sample that yields a mass per mole of sample,

$$\bar{M} = M \cdot \bar{x} \qquad \text{Eq. 1065.650-8}$$

Example:

$\bar{M}_{PM}$ = 144.0 μg/mol = 144.0 · 10^{-6} g/mol
$\bar{\dot{n}}_{dexh}$ = 57.692 mol/s
Δt = 1200 s
m_{PM} = 144.0 · 10^{-6} · 57.692 · 1200
m_{PM} = 9.9692 g

(4) *Additional provisions for diluted exhaust sampling; continuous or batch.* The following additional provisions apply for sampling emissions from diluted exhaust:

(i) For sampling with a constant dilution ratio (DR) of diluted exhaust versus exhaust flow (e.g., secondary dilution for PM sampling), calculate m using the following equation:

$$m = m_{dil} \cdot (DR) \qquad \text{Eq. 1065.650-9}$$

Example:

m_{PMdil} = 6.853 g
DR = 6:1
m_{PM} = 6.853 · (6)
m_{PM} = 41.118 g

(ii) For continuous or batch sampling, you may measure background emissions in the dilution air. You may

then subtract the measured background emissions, as described in § 1065.667.

(d) *Total work over a test interval.* To calculate the total work from the engine over a test interval, add the total work from all the work paths described in § 1065.210 that cross the system boundary including electrical energy/work, mechanical shaft work, and fluid pumping work. For all work paths, except the engine's primary output shaft (crankshaft), the total work for the path over the test interval is the integration of the net work flow rate (power) out of the system boundary. When energy/work flows into the system boundary, this work flow rate signal becomes negative; in this case, include these negative work rate values in the integration to calculate total work from that work path. Some work paths may result in a negative total work. Include negative total work values from any work path in the calculated total work from the engine rather than setting the values to zero. The rest of this paragraph (d) describes how to calculate total work from the engine's primary output shaft over a test interval. Before integrating power on the engine's primary output shaft, adjust the speed and torque data for the time alignment used in § 1065.514(c). Any advance or delay used on the feedback signals for cycle validation must also be used for calculating work. Account for work of accessories according to § 1065.110. Exclude any work during cranking and starting. Exclude work during actual motoring operation (negative feedback torques), unless the engine was connected to one or more energy storage devices. Examples of such energy storage devices include hybrid powertrain batteries and hydraulic accumulators, like the ones illustrated in Figure 1 of § 1065.210. Exclude any work during reference zero-load idle periods (0% speed or idle speed with 0 N·m reference torque). Note, that there must be two consecutive reference zero load idle points to establish a period where this applies. Include work during idle points with simulated minimum torque such as Curb Idle Transmissions Torque (CITT) for automatic transmissions in ''drive''. The work calculation method described in paragraphs (b)(1) through (7) of this section meets these requirements using rectangular integration. You may use other logic that gives equivalent results. For example, you may use a trapezoidal integration method as described in paragraph (b)(8) of this section.

(1) Time align the recorded feedback speed and torque values by the amount used in § 1065.514(c).

(2) Calculate shaft power at each point during the test interval by multiplying all the recorded feedback engine speeds by their respective feedback torques.

(3) Adjust (reduce) the shaft power values for accessories according to § 1065.110.

(4) Set all power values during any cranking or starting period to zero. See § 1065.525 for more information about engine cranking.

(5) Set all negative power values to zero, unless the engine was connected to one or more energy storage devices. If the engine was tested with an energy storage device, leave negative power values unaltered.

(6) Set all power values to zero during idle periods with a corresponding reference torque of 0 N·m.

(7) Integrate the resulting values for power over the test interval. Calculate total work as follows:

$$W = \sum_{i=1}^{N} P_i \cdot \Delta t \qquad \text{Eq. 1065.650-10}$$

Where:

W = total work from the primary output shaft

P_i = instantaneous power from the primary output shaft over an interval i.

$$P_i = f_{ni} \cdot T_i \qquad \text{Eq. 1065.650-11}$$

Example:

N = 9000
f_{n1} = 1800.2 rev/min
f_{n2} = 1805.8 rev/min
T_1 = 177.23 N·m
T_2 = 175.00 N·m
C_{rev} = 2·π rad/rev
C_{t1} = 60 s/min
C_p = 1000 (N·m·rad/s)/kW
f_{record} = 5 Hz
C_{t2} = 3600 s/hr

$$P_1 = \frac{1800.2 \cdot 177.23 \cdot 2 \cdot 3.14159}{60 \cdot 1000}$$

P_1 = 33.41 kW
P_2 = 33.09 kW

Using Eq. 1065.650–5,
Δt = ⅕ = 0.2 s

$$W = \frac{(33.41 + 33.09 + \ldots + P_{9000}) \cdot 0.2}{3600}$$

W = 16.875 kW·hr

(8) You may use a trapezoidal integration method instead of the rectangular integration described in this paragraph (d). To do this, you must integrate the fraction of work between points where the torque is positive. You may assume that speed and torque are linear between data points. You may not set negative values to zero before running the integration.

(e) *Steady-state mass rate divided by power*. To determine steady-state brake-specific emissions for a test interval as described in paragraph (b)(2) of this section, calculate the mean steady-state mass rate of the emission, $\overline{\dot{m}}$, and the mean steady-state power, $\bar{P}$ as follows:

(1) To calculate $\overline{\dot{m}}$, multiply its mean concentration, $\bar{x}$, by its corresponding mean molar flow rate, $\overline{\dot{n}}$. If the result is a molar flow rate, convert this quantity to a mass rate by multiplying it by its molar mass, M. The result is the mean mass rate of the emission, $\overline{\dot{m}}$. In the case of PM emissions, where the mean PM concentration is already in units of mass per mole of sample, $\bar{M}_{PM}$, simply multiply it by the mean molar flow rate, $\overline{\dot{n}}$. The result is the mass rate of PM, $\dot{m}_{PM}$. Calculate $\overline{\dot{m}}$ using the following equation:

$$\overline{\dot{m}} = M \cdot \bar{x} \cdot \overline{\dot{n}} \qquad \text{Eq. 1065.650-12}$$

(2) To calculate an engine's mean steady-state total power, $\bar{P}$, add the mean steady-state power from all the work paths described in §1065.210 that cross the system boundary including electrical power, mechanical shaft power, and fluid pumping power. For all work paths, except the engine's primary output shaft (crankshaft), the mean steady-state power over the test interval is the integration of the net work flow rate (power) out of the system boundary divided by the period of the test interval. When power flows into the system boundary, the power/work flow rate signal becomes negative; in this case, include these negative power/work rate values in the integration to calculate the mean power from that work path. Some work paths may result in a negative mean power. Include negative mean power values from any work path in the mean total power from the engine rather than setting these values to zero. The rest of this paragraph (e)(2) describes how to

calculate the mean power from the engine's primary output shaft. Calculate $\bar{P}$ using Equation 1065.650–13, noting that $\bar{P}$, $\bar{f}_n$ and $\bar{T}$ refer to mean power, mean rotational shaft frequency, and mean torque from the primary output shaft. Account for the power of simulated accessories according to §1065.110 (reducing the mean primary output shaft power or torque by the accessory power or torque). Set the power to zero during actual motoring operation (negative feedback torques), unless the engine was connected to one or more energy storage devices. Examples of such energy storage devices include hybrid powertrain batteries and hydraulic accumulators, like the ones illustrated in Figure 1 of §1065.210. Set the power to zero for modes with a zero reference load (0 Nm reference torque or 0 kW reference power). Include power during idle modes with simulated minimum torque or power.

$$\bar{P} = \bar{f}_n \cdot \bar{T} \qquad \text{Eq. 1065.650-13}$$

(3) Divide emission mass rate by power to calculate a brake-specific emission result as described in paragraph (b)(2) of this section.

(4) The following example shows how to calculate mass of emissions using mean mass rate and mean power:

$\tilde{M}_{CO}$ = 28.0101 g/mol
$\bar{\tilde{x}}_{CO}$ = 12.00 mmol/mol = 0.01200 mol/mol
$\bar{\tilde{n}}$ = 1.530 mol/s
$\bar{f}_n$ = 3584.5 rev/min = 375.37 rad/s
$\bar{T}$ = 121.50 N · m
$\bar{\tilde{m}}$ = 28.0101 · 0.01200 · 1.530
$\bar{\tilde{m}}$ = 0.514 g/s = 1850.4 g/hr
$\bar{P}$ = 121.5 · 375.37
$\bar{P}$ = 45607 W
$\bar{P}$ = 45.607 kW
e_{CO} = 1850.4/45.61
e_{CO} = 40.57 g/(kW · hr)

(f) *Ratio of total mass of emissions to total work.* To determine brake-specific emissions for a test interval as described in paragraph (b)(3) of this section, calculate a value proportional to the total mass of each emission. Divide each proportional value by a value that is similarly proportional to total work.

(1) *Total mass.* To determine a value proportional to the total mass of an emission, determine total mass as described in paragraph (c) of this section, except substitute for the molar flow rate, $\dot{n}$, or the total flow, n, with a signal that is linearly proportional to molar flow rate, $\tilde{\dot{n}}$, or linearly proportional to total flow, $\tilde{n}$ as follows:

$$\tilde{\dot{m}}_{\text{fueli}} = \frac{1}{w_{\text{fuel}}} \cdot \frac{M_C \cdot \tilde{\dot{n}}_i \cdot x_{\text{Ccombdryi}}}{1 + x_{\text{H2Oexhdryi}}} \qquad \text{Eq. 1065.650-14}$$

(2) *Total work.* To calculate a value proportional to total work over a test interval, integrate a value that is proportional to power. Use information about the brake-specific fuel consumption of your engine, e_{fuel}, to convert a signal proportional to fuel flow rate to a signal proportional to power. To determine a signal proportional to fuel flow rate, divide a signal that is proportional to the mass rate of carbon products by the fraction of carbon in your fuel, w_c. You may use a measured w_c or you may use the default values for a given fuel as described in §1065.655. Calculate the mass rate of carbon from the amount of carbon and water in the exhaust, which you determine with a chemical balance of fuel, intake air, and exhaust as described in §1065.655. In the chemical balance, you must use concentrations from the flow that generated the signal proportional to molar flow rate, $\tilde{\dot{n}}$, in paragraph (e)(1) of this section. Calculate a value proportional to total work as follows:

$$W = \sum_{i=1}^{N} \tilde{P}_i \cdot \Delta t \qquad \text{Eq. 1065.650-15}$$

Where:

$$\tilde{P}_i = \frac{\tilde{\dot{m}}_{\text{fuel}i}}{e_{\text{fuel}}} \qquad \text{Eq. 1065.650-16}$$

(3) *Brake-specific emissions*. Divide the value proportional to total mass by the value proportional to total work to determine brake-specific emissions, as described in paragraph (b)(3) of this section.

(4) *Example*. The following example shows how to calculate mass of emissions using proportional values:

N= 3000
f_{record} = 5 Hz
e_{fuel} = 285 g/(kW·hr)
w_{fuel} = 0.869 g/g
M_c = 12.0107 g/mol
$\dot{n}_1$= 3.922 ~mol/s = 14119.2 mol/hr
$x_{\text{Ccombdry1}}$ = 91.634 mmol/mol = 0.091634 mol/mol
x_{H2Oexh1} = 27.21 mmol/mol = 0.02721 mol/mol
Using Eq. 1065.650–5,
Δt = 0.2 s

$$\tilde{W} = \frac{12.0107\left[\frac{3.922 \cdot 0.091634}{1+0.02721} + \frac{\tilde{\dot{n}}_2 \cdot x_{\text{Ccombdry2}}}{1+x_{\text{H2Oexh2}}} + \ldots + \frac{\tilde{\dot{n}}_{3000} \cdot x_{\text{Ccombdry3000}}}{1+x_{\text{H2Oexh3000}}}\right] \cdot 0.2}{285 \cdot 0.869}$$

W= 5.09 (kW·hr)

(g) *Brake-specific emissions over a duty cycle with multiple test intervals*. The standard-setting part may specify a duty cycle with multiple test intervals, such as with discrete-mode steady-state testing. Unless we specify otherwise, calculate composite brake-specific emissions over the duty cycle as described in this paragraph (g). If a measured mass (or mass rate) is negative, set it to zero for calculating composite brake-specific emissions, but leave it unchanged for drift validation. In the case of calculating composite brake-specific emissions relative to a combined emission standard (such as a NO_X + NMHC standard), change any negative mass (or mass rate) values to zero for a particular pollutant before combining the values for the different pollutants.

(1) Use the following equation to calculate composite brake-specific emissions for duty cycles with multiple test intervals all with prescribed durations, such as cold-start and hot-start transient cycles:

$$e_{\text{composite}} = \frac{\sum_{i=1}^{N} WF_i \cdot m_i}{\sum_{i=1}^{N} WF_i \cdot W_i} \qquad \text{Eq. 1065.650-17}$$

Where:

i = test interval number.

N = number of test intervals.

WF = weighting factor for the test interval as defined in the standard-setting part.

m = mass of emissions over the test interval as determined in paragraph (c) of this section.

W = total work from the engine over the test interval as determined in paragraph (d) of this section.

Example:

$N = 2$

$WF_1 = 0.1428$

$WF_2 = 0.8572$

$m_1 = 70.125$ g

$m_2 = 64.975$ g

$W_1 = 25.783$ kW·hr

$W_2 = 25.783$ kW·hr

$$e_{NO_x composite} = \frac{(0.1428 \cdot 70.125) + (0.8572 \cdot 64.975)}{(0.1428 \cdot 25.783) + (0.8572 \cdot 25.783)}$$

$e_{NOxcomposite} = 2.548$ g/kW·hr

(2) Calculate composite brake-specific emissions for duty cycles with multiple test intervals that allow use of varying duration, such as discrete-mode steady-state duty cycles, as follows:

(i) Use the following equation if you calculate brake-specific emissions over test intervals based on total mass and total work as described in paragraph (b)(1) of this section:

$$e_{composite} = \frac{\sum_{i=1}^{N} WF_i \cdot \frac{m_i}{t_i}}{\sum_{i=1}^{N} WF_i \cdot \frac{W_i}{t_i}} \qquad \text{Eq. 1065.650-18}$$

Where:

i = test interval number.

N = number of test intervals.

WF = weighting factor for the test interval as defined in the standard-setting part.

m = mass of emissions over the test interval as determined in paragraph (c) of this section.

W = total work from the engine over the test interval as determined in paragraph (d) of this section.

t = duration of the test interval.

Example:

$N = 2$

$WF_1 = 0.85$

$WF_2 = 0.15$

$m_1 = 1.3753$ g

$m_2 = 0.4135$ g

$t_1 = 120$ s

$t_2 = 200$ s

$W_1 = 2.8375$ kW·hr

$W_2 = 0.0$ kW·hr

$$e_{NO_x composite} = \frac{\left(0.85 \cdot \frac{1.3753}{120}\right) + \left(0.15 \cdot \frac{0.4135}{200}\right)}{\left(0.85 \cdot \frac{2.8375}{120}\right) + \left(0.15 \cdot \frac{0.0}{200}\right)}$$

$e_{NOxcomposite} = 0.5001$ g/kW·hr

(ii) Use the following equation if you calculate brake-specific emissions over

test intervals based on the ratio of mass rate to power as described in paragraph (b)(2) of this section:

$$e_{\text{composite}} = \frac{\sum_{i=1}^{N} WF_i \cdot \bar{\dot{m}}_i}{\sum_{i=1}^{N} WF_i \cdot \bar{P}_i} \qquad \text{Eq. 1065.650-19}$$

Where:

i = test interval number.

N = number of test intervals.

WF = weighting factor for the test interval as defined in the standard-setting part.

$\bar{\dot{m}}$= mean steady-state mass rate of emissions over the test interval as determined in paragraph (e) of this section.

$\bar{P}$ is the mean steady-state power over the test interval as described in paragraph (e) of this section.

Example:

$N = 2$

$WF_1 = 0.85$

$WF_2 = 0.15$

$\bar{\dot{m}}_1 = 2.25842$ g/hr

$\bar{\dot{m}}_2 = 0.063443$ g/hr

$\bar{P}_1 = 4.5383$ kW

$\bar{P}_2 = 0.0$ kW

$$e_{\text{NO}_x\text{composite}} = \frac{(0.85 \cdot 2.25842) + (0.15 \cdot 0.063443)}{(0.85 \cdot 4.5383) + (0.15 \cdot 0.0)}$$

$e_{\text{NOxcomposite}} = 0.5001$ g/kW·hr

(h) *Rounding*. Round the final brake-specific emission values to be compared to the applicable standard only after all calculations are complete (including any drift correction, applicable deterioration factors, adjustment factors, and allowances) and the result is in g/(kW·hr) or units equivalent to the units of the standard, such as g/(hp·hr). *See* the definition of ''Round'' in § 1065.1001.

[73 FR 37328, June 30, 2008, as amended at 73 FR 59332, Oct. 8, 2008; 75 FR 23048, Apr. 30, 2010]

§ 1065.655 Chemical balances of fuel, intake air, and exhaust.

(a) *General*. Chemical balances of fuel, intake air, and exhaust may be used to calculate flows, the amount of water in their flows, and the wet concentration of constituents in their flows. With one flow rate of either fuel, intake air, or exhaust, you may use chemical balances to determine the flows of the other two. For example, you may use chemical balances along with either intake air or fuel flow to determine raw exhaust flow.

(b) *Procedures that require chemical balances*. We require chemical balances when you determine the following:

(1) A value proportional to total work, $\tilde{W}$, when you choose to determine brake-specific emissions as described in § 1065.650(e).

(2) The amount of water in a raw or diluted exhaust flow, x_{H2Oexh}, when you do not measure the amount of water to correct for the amount of water removed by a sampling system. Correct for removed water according to § 1065.659(c)(2).

(3) The flow-weighted mean fraction of dilution air in diluted exhaust, $x_{\text{dil/exh}}$, when you do not measure dilution air flow to correct for background emissions as described in § 1065.667(c). Note that if you use chemical balances for this purpose, you are assuming that your exhaust is stoichiometric, even if it is not.

(c) *Chemical balance procedure.* The calculations for a chemical balance involve a system of equations that require iteration. We recommend using a computer to solve this system of equations. You must guess the initial values of up to three quantities: The amount of water in the measured flow, x_{H2Oexh}, fraction of dilution air in diluted exhaust, $x_{dil/exh}$, and the amount of products on a C_1 basis per dry mole of dry measured flow, $x_{Ccombdry}$. You may use time-weighted mean values of combustion air humidity and dilution air humidity in the chemical balance; as long as your combustion air and dilution air humidities remain within tolerances of ±0.0025 mol/mol of their respective mean values over the test interval. For each emission concentration, x, and amount of water, x_{H2Oexh}, you must determine their completely dry concentrations, x_{dry} and $x_{H2Oexhdry}$. You must also use your fuel's atomic hydrogen-to-carbon ratio, α, oxygen-to-carbon ratio, β, sulfur-to-carbon ratio, γ, and nitrogen-to-carbon ratio, δ. You may measure α, β, γ, and δ or you may use default values for a given fuel as described in §1065.655(d). Use the following steps to complete a chemical balance:

(1) Convert your measured concentrations such as, $x_{CO2meas}$, x_{NOmeas}, and x_{H2Oint}, to dry concentrations by dividing them by one minus the amount of water present during their respective measurements; for example: $x_{H2OxCO2meas}$ x, $_{H2OxNOmeas}$, and x_{H2Oint}. If the amount of water present during a ''wet'' measurement is the same as the unknown amount of water in the exhaust flow, x_{H2Oexh}, iteratively solve for that value in the system of equations. If you measure only total NO_X and not NO and NO_2 separately, use good engineering judgment to estimate a split in your total NO_X concentration between NO and NO_2 for the chemical balances. For example, if you measure emissions from a stoichiometric spark-ignition engine, you may assume all NO_X is NO. For a compression-ignition engine, you may assume that your molar concentration of NO_X, x_{NOx}, is 75% NO and 25% NO_2. For NO_2 storage aftertreatment systems, you may assume x_{NOx} is 25% NO and 75% NO_2. Note that for calculating the mass of NO_X emissions, you must use the molar mass of NO_2 for the effective molar mass of all NO_X species, regardless of the actual NO_2 fraction of NO_X.

(2) Enter the equations in paragraph (c)(4) of this section into a computer program to iteratively solve for x_{H2Oexh}, $x_{Ccombdry}$, and $x_{dil/exh}$. Use good engineering judgment to guess initial values for x_{H2Oexh}, $x_{Ccombdry}$, and $x_{dil/exh}$. We recommend guessing an initial amount of water that is about twice the amount of water in your intake or dilution air. We recommend guessing an initial value of $x_{Ccombdry}$ as the sum of your measured CO_2, CO, and THC values. We also recommend guessing an initial $x_{dil/exh}$ between 0.75 and 0.95, such as 0.8. Iterate values in the system of equations until the most recently updated guesses are all within ± 1% of their respective most recently calculated values.

(3) Use the following symbols and subscripts in the equations for this paragraph (c):

$x_{dil/exh}$ = amount of dilution gas or excess air per mole of exhaust.

x_{H2Oexh} = amount of water in exhaust per mole of exhaust.

$x_{Ccombdry}$ = amount of carbon from fuel in the exhaust per mole of dry exhaust.

x_{H2dry} = amount of H_2 in exhaust per amount of dry exhaust.

K_{H2Ogas} = water-gas reaction equilibrium coefficient. You may use 3.5 or calculate your own value using good engineering judgment.

$x_{H2Oexhdry}$ = amount of water in exhaust per dry mole of dry exhaust.

$x_{prod/intdry}$ = amount of dry stoichiometric products per dry mole of intake air.

$x_{dil/exhdry}$ = amount of dilution gas and/or excess air per mole of dry exhaust.

$x_{int/exhdry}$ = amount of intake air required to produce actual combustion products per mole of dry (raw or diluted) exhaust.

$x_{raw/exhdry}$ = amount of undiluted exhaust, without excess air, per mole of dry (raw or diluted) exhaust.

x_{O2int} = amount of intake air O_2 per mole of intake air.

$x_{CO2intdry}$ = amount of intake air CO_2 per mole of dry intake air. You may use $x_{CO2intdry}$ = 375 μmol/mol, but we

recommend measuring the actual concentration in the intake air.

$x_{H2Ointdry}$ = amount of intake air H_2O per mole of dry intake air.

x_{CO2int} = amount of intake air CO_2 per mole of intake air.

x_{CO2dil} = amount of dilution gas CO_2 per mole of dilution gas.

$x_{CO2dildry}$ = amount of dilution gas CO_2 per mole of dry dilution gas. If you use air as diluent, you may use $x_{CO2dildry}$ = 375 μmol/mol, but we recommend measuring the actual concentration in the intake air.

$x_{H2Odildry}$ = amount of dilution gas H_2O per mole of dry dilution gas.

x_{H2Odil} = amount of dilution gas H_2O per mole of dilution gas.

$x_{[emission]meas}$ = amount of measured emission in the sample at the respective gas analyzer.

$x_{[emission]dry}$ = amount of emission per dry mole of dry sample.

$x_{H2O[emission]meas}$ = amount of water in sample at emission-detection location. Measure or estimate these values according to §1065.145(e)(2).

x_{H2Oint} = amount of water in the intake air, based on a humidity measurement of intake air.

α = atomic hydrogen-to-carbon ratio of the mixture of fuel(s) being combusted, weighted by molar consumption.

β = atomic oxygen-to-carbon ratio of the mixture of fuel(s) being combusted, weighted by molar consumption.

γ = atomic sulfur-to-carbon ratio of the mixture of fuel(s) being combusted, weighted by molar consumption.

δ = atomic nitrogen-to-carbon ratio of the mixture of fuel(s) being combusted, weighted by molar consumption.

(4) Use the following equations to iteratively solve for $x_{dil/exh}$, x_{H2Oexh}, and $x_{Ccombdry}$:

$$x_{dil/exh} = 1 - \frac{x_{raw/exhdry}}{1 + x_{H2Oexhdry}} \qquad \text{Eq. 1065.655-1}$$

$$x_{H2Oexh} = \frac{x_{H2Oexhdry}}{1 + x_{H2Oexhdry}} \qquad \text{Eq. 1065.655-2}$$

$$x_{Ccombdry} = x_{CO2dry} + x_{COdry} + x_{THCdry} - x_{CO2dil} \cdot x_{dil/exhdry} - x_{CO2int} \cdot x_{int/exhdry} \qquad \text{Eq. 1065.655-3}$$

$$x_{H2dry} = \frac{x_{COdry} \cdot \left(x_{H2Oexhdry} - x_{H2Odil} \cdot x_{dil/exhdry}\right)}{K_{H2O\text{-}gas} \cdot \left(x_{CO2dry} - x_{CO2dil} \cdot x_{dil/exhdry}\right)} \qquad \text{Eq. 1065.655-4}$$

$$x_{H2Oexhdry} = \frac{\alpha}{2}\left(x_{Ccombdry} - x_{THCdry}\right) + x_{H2Odil} \cdot x_{dil/exhdry} + x_{H2Oint} \cdot x_{int/exhdry} - x_{H2dry} \qquad \text{Eq. 1065.655-5}$$

$$x_{dil/exhdry} = \frac{x_{dil/exh}}{1 - x_{H2Oexh}} \qquad \text{Eq. 1065.655-6}$$

$$x_{int/exhdry} = \frac{1}{2 \cdot x_{O2int}}\left(\left(\frac{\alpha}{2} - \beta + 2 + 2\gamma\right)\left(x_{Ccombdry} - x_{THCdry}\right) - \left(x_{COdry} - x_{NOdry} - 2x_{NO2dry} + x_{H2dry}\right)\right) \qquad \text{Eq. 1065.655-7}$$

$$x_{raw/exhdry} = \frac{1}{2}\left(\left(\frac{\alpha}{2} + \beta + \delta\right)\left(x_{Ccombdry} - x_{THCdry}\right) + \left(2x_{THCdry} + x_{COdry} - x_{NO2dry} + x_{H2dry}\right)\right) + x_{int/exhdry} \qquad \text{Eq. 1065.655-8}$$

$$x_{O2int} = \frac{0.209820 - x_{CO2intdry}}{1 + x_{H2Ointdry}} \qquad \text{Eq. 1065.655-9}$$

$$x_{CO2int} = \frac{x_{CO2intdry}}{1 + x_{H2Ointdry}} \quad \text{Eq. 1065.655-10}$$

$$x_{H2Ointdry} = \frac{x_{H2Oint}}{1 - x_{H2Oint}} \quad \text{Eq. 1065.655-11}$$

$$x_{CO2dil} = \frac{x_{CO2dildry}}{1 + x_{H2Odildry}} \quad \text{Eq. 1065.655-12}$$

$$x_{H2Odildry} = \frac{x_{H2Odil}}{1 - x_{H2Odil}} \quad \text{Eq. 1065.655-13}$$

$$x_{COdry} = \frac{x_{COmeas}}{1 - x_{H2OCOmeas}} \quad \text{Eq. 1065.655-14}$$

$$x_{CO2dry} = \frac{x_{CO2meas}}{1 - x_{H2OCO2meas}} \quad \text{Eq. 1065.655-15}$$

$$x_{NOdry} = \frac{x_{NOmeas}}{1 - x_{H2ONOmeas}} \quad \text{Eq. 1065.655-16}$$

$$x_{NO2dry} = \frac{x_{NO2meas}}{1 - x_{H2ONO2meas}} \quad \text{Eq. 1065.655-17}$$

$$x_{THCdry} = \frac{x_{THCmeas}}{1 - x_{H2OTHCmeas}} \quad \text{Eq. 1065.655-18}$$

(5) The following example is a solution for $x_{dil/exh}$, x_{H2Oexh}, and $x_{Ccombdry}$ using the equations in paragraph (c)(4) of this section:

$$x_{dil/exh} = 1 - \frac{0.184}{1 + \frac{35.38}{1000}} = 0.822\ mol/mol$$

$$x_{H2Oexh} = \frac{35.38}{1 + \frac{35.38}{1000}} = 34.18\ mmol/mol$$

$$x_{Ccombdry} = 0.025 + \frac{29.3}{1000000} + \frac{47.6}{1000000} - \frac{0.371}{1000} \cdot 0.851 - \frac{0.369}{1000} \cdot 0.172 = 0.0249\ mol/mol$$

$$x_{\mathrm{H2dry}} = \frac{29.3 \cdot (0.034 - 0.012 \cdot 0.851)}{3.5 \cdot \left(\frac{25.2}{1000} - \frac{0.371}{1000} \cdot 0.851\right)} = 8.5 \mu mol/mol$$

$$x_{\mathrm{H2Oexhdry}} = \frac{1.8}{2}\left(0.0249 - \frac{47.6}{1000000}\right) + 0.018 \cdot 0.851 + 0.017 \cdot 0.172 - \frac{8.5}{1000000} = 0.0353\ mol/mol$$

$$x_{\mathrm{dil/exhdry}} = \frac{0.822}{1 - 0.034} = 0.851\ mol/mol$$

$$x_{\mathrm{int/exhdry}} = \frac{1}{2 \cdot 0.206}\left(\begin{array}{l}\left(\frac{1.8}{2} - 0.050 + 2 + 2 \cdot 0.0003\right)\left(0.0249 - \frac{47.6}{1000000}\right) - \\ \left(\frac{29.3}{1000000} - \frac{50.4}{1000000} - 2 \cdot \frac{12.1}{1000000} + \frac{8.5}{1000000}\right)\end{array}\right) = 0.172\ mol/mol$$

$$x_{\mathrm{raw/exhdry}} = \frac{1}{2}\left(\begin{array}{l}\left(\frac{1.8}{2} + 0.050 + 0.0001\right)\left(0.0249 - \frac{47.6}{1000000}\right) + \\ \left(2 \cdot \frac{47.6}{1000000} + \frac{29.3}{1000000} - \frac{12.1}{1000000} + \frac{8.5}{1000000}\right)\end{array}\right) + 0.172 = 0.184\ mol/mol$$

$$x_{\mathrm{O2int}} = \frac{0.209820 - 0.000375}{1 + \frac{17.22}{1000}} = 0.206\ mol/mol$$

$$x_{\mathrm{CO2int}} = \frac{0.000375 \cdot 1000}{1 + \frac{17.22}{1000}} = 0.369\ mmol/mol$$

$$x_{\mathrm{H2Ointdry}} = \frac{16.93}{1 - \frac{16.93}{1000}} = 17.22\ mmol/mol$$

$$x_{\mathrm{CO2dil}} = \frac{0.375}{1 + \frac{12.01}{1000}} = 0.371\ mmol/mol$$

$$x_{\mathrm{H2Odildry}} = \frac{11.87}{1 - \frac{11.87}{1000}} = 12.01\ mmol/mol$$

$$x_{\mathrm{COdry}} = \frac{29.0}{1 - \frac{8.601}{1000}} = 29.3\ mmol/mol$$

$$x_{CO2dry} = \frac{24.98}{1 - \frac{8.601}{1000}} = 25.2\ mmol/mol$$

$$x_{NOdry} = \frac{50.0}{1 - \frac{8.601}{1000}} = 50.4\ mmol/mol$$

$$x_{NO2dry} = \frac{12.0}{1 - \frac{8.601}{1000}} = 12.1\ mmol/mol$$

$$x_{THCdry} = \frac{46}{1 - \frac{34.18}{1000}} = 47.6\ mmol/mol$$

$\alpha = 1.8$
$\beta = 0.05$
$\gamma = 0.0003$
$\delta = 0.0001$

(d) *Carbon mass fraction*. Determine carbon mass fraction of fuel, w_c, using one of the following methods:

(1) You may calculate w_c as described in this paragraph (d)(1) based on measured fuel properties. To do so, you must determine values for α and β in all cases, but you may set γ and δ to zero if the default value listed in Table 1 of this section is zero. Calculate w_c using the following equation:

$$w_C = \frac{1 \cdot M_C}{1 \cdot M_C + \alpha \cdot M_H + \beta \cdot M_O + \gamma \cdot M_S + \delta \cdot M_N} \qquad \text{Eq. 1065.655-19}$$

Where:
w_C, = carbon mass fraction of fuel.
M_C = molar mass of carbon.
α = atomic hydrogen-to-carbon ratio of the mixture of fuel(s) being combusted, weighted by molar consumption.
M_H = molar mass of hydrogen.
β = atomic oxygen-to-carbon ratio of the mixture of fuel(s) being combusted, weighted by molar consumption.
M_O = molar mass of oxygen.
γ = atomic sulfur-to-carbon ratio of the mixture of fuel(s) being combusted, weighted by molar consumption.
M_S = molar mass of sulfur.
δ = atomic nitrogen-to-carbon ratio of the mixture of fuel(s) being combusted, weighted by molar consumption.
M_N = molar mass of nitrogen.

Example:

$\alpha = 1.8$
$\beta = 0.05$
$\gamma = 0.0003$
$\delta = 0.0001$
$M_C = 12.0107$
$M_H = 1.01$
$M_O = 15.9994$
$M_S = 32.065$
$M_N = 14.0067$

$$w_C = \frac{1 \cdot 12.0107}{1 \cdot 12.0107 + 1.8 \cdot 1.01 + 0.05 \cdot 15.9994 + 0.0003 \cdot 32.065 + 0.0001 \cdot 14.0067}$$

w_C, = 0.8205

(2) You may use the default values in the following table to determine w_c for a given fuel:

TABLE 1 OF § 1065.655—DEFAULT VALUES OF α, β, γ, δ, AND w_c, FOR VARIOUS FUELS

Fuel	Atomic hydrogen, oxygen, sulfur, and nitrogen-to-carbon ratios $CH\alpha O\beta S\gamma N\delta$	Carbon mass fraction, w_c g/g.
Gasoline	$CH_{1.85}O_0S_0N_0$	0.866
#2 Diesel	$CH_{1.80}O_0S_0N_0$	0.869
#1 Diesel	$CH_{1.93}O_0S_0N_0$	0.861
Liquefied Petroleum Gas	$CH_{2.64}O_0S_0N_0$	0.819
Natural gas	$CH_{3.78}O_{0.016}S_0N_0$	0.747
Ethanol	$CH_3O_{0.5}S_0N_0$	0.521
Methanol	$CH_4O_1S_0N_0$	0.375
Residual fuel blends	Must be determined by measured fuel properties as described in paragraph (d)(1) of this section.	

(e) *Calculated raw exhaust molar flow rate from measured intake air molar flow rate or fuel mass flow rate.* You may calculate the raw exhaust molar flow rate from which you sampled emissions, $\dot{n}_{exh}$, based on the measured intake air molar flow rate, $\dot{n}_{int}$, or the measured fuel mass flow rate, $\dot{m}_{fuel}$, and the values calculated using the chemical balance in paragraph (c) of this section. Note that the chemical balance must be based on raw exhaust gas concentrations. Solve for the chemical balance in paragraph (c) of this section at the same frequency that you update and record $\dot{n}_{int}$ or $\dot{m}_{fuel}$.

(1) *Crankcase flow rate.* If engines are not subject to crankcase controls under the standard-setting part, you may calculate raw exhaust flow based on $\dot{n}_{int}$ or $\dot{m}_{fuel}$ using one of the following:

(i) You may measure flow rate through the crankcase vent and subtract it from the calculated exhaust flow.

(ii) You may estimate flow rate through the crankcase vent by engineering analysis as long as the uncertainty in your calculation does not adversely affect your ability to show that your engines comply with applicable emission standards.

(iii) You may assume your crankcase vent flow rate is zero.

(2) *Intake air molar flow rate calculation.* Based on $\dot{n}_{int}$, calculate $\dot{n}_{exh}$ as follows:

$$\dot{n}_{exh} = \frac{\dot{n}_{int}}{\left(1 + \frac{\left(x_{int/exhdry} - x_{raw/exhdry}\right)}{\left(1 + x_{H2Oexhdry}\right)}\right)} \qquad \text{Eq. 1065.655-20}$$

Where:

$\dot{n}_{exh}$ = raw exhaust molar flow rate from which you measured emissions.

$\dot{n}_{int}$ = intake air molar flow rate including humidity in intake air.

Example:

$\dot{n}_{int}$ = 3.780 mol/s

$x_{int/exhdry}$ = 0.69021 mol/mol

$x_{raw/exhdry}$ = 1.10764 mol/mol

$x_{H20exhdry}$ = 107.64 mmol/mol = 0.10764 mol/mol

$$\dot{n}_{exh} = \frac{3.780}{\left(1 + \frac{(0.69021 - 1.10764)}{(1 + 0.10764)}\right)}$$

$\dot{n}_{exh}$ = 6.066 mol/s

(3) *Fuel mass flow rate calculation.* Based on $\dot{m}_{fuel}$, calculate $\dot{n}_{exh}$ as follows:

$$\dot{n}_{exh} = \frac{\dot{m}_{fuel} \cdot w_c \cdot \left(1 + x_{H2Oexhdry}\right)}{M_c \cdot x_{Ccombdry}} \qquad \text{Eq. 1065.655-21}$$

Where:

$\dot{n}_{exh}$ = raw exhaust molar flow rate from which you measured emissions.

$\dot{m}_{fuel}$ = fuel flow rate including humidity in intake air.

Example:

$\dot{m}_{fuel}$ = 7.559 g/s

w_C = 0.869 g/g

M_C = 12.0107 g/mol

$x_{Ccombdry}$ = 99.87 mmol/mol = 0.09987 mol/mol

$x_{H20exhdry}$ = 107.64 mmol/mol = 0.10764 mol/mol

$$\dot{n}_{exh} = \frac{7.559 \cdot 0.869 \cdot (1 + 0.10764)}{12.0107 \cdot 0.09987}$$

$\dot{n}_{exh}$= 6.066 mol/s

[73 FR 37331, June 30, 2008, as amended at 73 FR 59334, Oct. 8, 2008; 75 FR 23051, Apr. 30, 2010]

§ 1065.659 Removed water correction.

(a) If you remove water upstream of a concentration measurement, x, or upstream of a flow measurement, n, correct for the removed water. Perform this correction based on the amount of water at the concentration measurement, $x_{H2O[emission]meas}$, and at the flow meter, x_{H2Oexh}, whose flow is used to determine the concentration's total mass over a test interval.

(b) When using continuous analyzers downstream of a sample dryer for transient and ramped-modal testing, you must correct for removed water using signals from other continuous analyzers. When using batch analyzers downstream of a sample dryer, you must correct for removed water by using signals either from other batch analyzers or from the flow-weighted average concentrations from continuous analyzers. Downstream of where you removed water, you may determine the amount of water remaining by any of the following:

(1) Measure the dewpoint and absolute pressure downstream of the water removal location and calculate the amount of water remaining as described in § 1065.645.

(2) When saturated water vapor conditions exist at a given location, you may use the measured temperature at that location as the dewpoint for the downstream flow. If we ask, you must demonstrate how you know that saturated water vapor conditions exist. Use good engineering judgment to measure the temperature at the appropriate location to accurately reflect the dewpoint of the flow. Note that if you use this option and the water correction in paragraph (d) of this section results in a corrected value that is greater than the measured value, your saturation assumption is invalid and you must determine the water content according to paragraph (b)(1) of this section.

(3) You may also use a nominal value of absolute pressure based on an alarm set point, a pressure regulator set point, or good engineering judgment.

(4) Set $x_{H2O[emission]meas}$ equal to that of the measured upstream humidity condition if it is lower than the dryer saturation conditions.

(c) For a corresponding concentration or flow measurement where you did not remove water, you may determine the amount of initial water by any of the following:

(1) Use any of the techniques described in paragraph (b) of this section.

(2) If the measurement comes from raw exhaust, you may determine the amount of water based on intake-air humidity, plus a chemical balance of fuel, intake air and exhaust as described in § 1065.655.

(3) If the measurement comes from diluted exhaust, you may determine the amount of water based on intake-air humidity, dilution air humidity, and a chemical balance of fuel, intake air, and exhaust as described in § 1065.655.

(d) Perform a removed water correction to the concentration measurement using the following equation:

$$x = x_{[emission]meas} \cdot \left[\frac{1 - x_{H2Oexh}}{1 - x_{H2O[emission]meas}} \right] \qquad \text{Eq. 1065.659-1}$$

Example:

x_{COmeas} = 29.0 μmol/mol
$x_{H2OCOmeas}$ = 8.601 mmol/mol = 0.008601 mol/mol
x_{H2Oexh} = 34.04 mmol/mol = 0.03404 mol/mol

$$x_{CO} = 29.0 \cdot \left[\frac{1 - 0.03404}{1 - 0.008601} \right]$$

x_{CO} = 28.3 μmol/mol

[73 FR 37335, June 30, 2008]

§ 1065.660 THC, NMHC, and CH_4 determination.

(a) *THC determination and THC/CH_4 initial contamination corrections.* (1) If we require you to determine THC emissions, calculate $x_{THC[THC-FID]cor}$ using the initial THC contamination concentration $x_{THC[THC-FID]init}$ from § 1065.520 as follows:

$$x_{THC[THC\text{-}FID]cor} = x_{THC[THC\text{-}FID]uncor} - x_{THC[THC\text{-}FID]\ init} \qquad \text{Eq. 1065.660-1}$$

Example:

$x_{THCuncor}$ = 150.3 μmol/mol
$x_{THCinit}$ = 1.1 μmol/mol
x_{THCcor} = 150.3 − 1.1
x_{THCcor} = 149.2 μmol/mol

(2) For the NMHC determination described in paragraph (b) of this section, correct $x_{THC[THC-FID]}$ for initial HC contamination using Eq. 1065.660–1. You may correct $x_{THC[NMC-FID]}$ for initial contamination of the CH_4 sample train using Eq. 1065.660–1, substituting in CH_4 concentrations for THC.

(3) For the CH_4 determination described in paragraph (c) of this section, you may correct $x_{THC[NMC-FID]}$ for initial contamination of the CH_4 sample train using Eq. 1065.660–1, substituting in CH_4 concentrations for THC.

(b) *NMHC determination.* Use one of the following to determine NMHC concentration, x_{NMHC}:

(1) If you do not measure CH_4, you may determine NMHC concentrations as described in § 1065.650(c)(1)(vi).

(2) For nonmethane cutters, calculate x_{NMHC} using the nonmethane cutter's penetration fractions (*PF*) of CH_4 and C_2H_6 from § 1065.365, and using the HC contamination and dry-to-wet corrected THC concentration $x_{THC[THC-FID]cor}$ as determined in paragraph (a) of this section.

(i) Use the following equation for penetration fractions determined using an NMC configuration as outlined in §1065.365(d):

$$x_{\mathrm{NMHC}} = \frac{x_{\mathrm{THC[THC\text{-}FID]cor}} - x_{\mathrm{THC[NMC\text{-}FID]cor}} \cdot RF_{\mathrm{CH4[THC\text{-}FID]}}}{1 - RFPF_{\mathrm{C2H6[NMC\text{-}FID]}} \cdot RF_{\mathrm{CH4[THC\text{-}FID]}}} \qquad \text{Eq. 1065.660-2}$$

Where:

x_{NMHC} = concentration of NMHC.

$x_{\mathrm{THC[THC\text{–}FID]cor}}$ = concentration of THC, HC contamination and dry-to-wet corrected, as measured by the THC FID during sampling while bypassing the NMC.

$x_{\mathrm{THC[NMC\text{–}FID]cor}}$ = concentration of THC, HC contamination (optional) and dry-to-wet corrected, as measured by the NMC FID during sampling through the NMC.

$RF_{\mathrm{CH4[THC\text{–}FID]}}$ = response factor of THC FID to CH_4, according to §1065.360(d).

$RFPF_{\mathrm{C2H6[NMC\text{–}FID]}}$ = nonmethane cutter combined ethane response factor and penetration fraction, according to §1065.365(d).

Example:

$x_{\mathrm{THC[THC\text{–}FID]cor}}$ = 150.3 μmol/mol

$x_{\mathrm{THC[NMC\text{–}FID]cor}}$ = 20.5 μmol/mol

$RFPF_{\mathrm{C2H6[NMC\text{–}FID]}}$ = 0.019

$RF_{\mathrm{CH4[THC\text{–}FID]}}$ = 1.05

$$x_{\mathrm{NMHC}} = \frac{150.3 - 20.5 \cdot 1.05}{1 - 0.019 \cdot 1.05}$$

x_{NMHC} = 131.4 μmol/mol

(ii) For penetration fractions determined using an NMC configuration as outlined in section §1065.365(e), use the following equation:

$$x_{\mathrm{NMHC}} = \frac{x_{\mathrm{THC[THC\text{-}FID]cor}} \cdot PF_{\mathrm{CH4[NMC\text{-}FID]}} - x_{\mathrm{THC[NMC\text{-}FID]cor}}}{PF_{\mathrm{CH4[NMC\text{-}FID]}} - PF_{\mathrm{C2H6[NMC\text{-}FID]}}} \qquad \text{Eq. 1065.660-3}$$

Where:

x_{NMHC} = concentration of NMHC.

$x_{\mathrm{THC[THC\text{–}FID]cor}}$ = concentration of THC, HC contamination and dry-to-wet corrected, as measured by the THC FID during sampling while bypassing the NMC.

$PF_{\mathrm{CH4[NMC\text{–}FID]}}$ = nonmethane cutter CH_4 penetration fraction, according to §1065.365(e).

$x_{\mathrm{THC[NMC\text{–}FID]cor}}$ = concentration of THC, HC contamination (optional) and dry-to-wet corrected, as measured by the THC FID during sampling through the NMC.

$PF_{\mathrm{C2H6[NMC\text{–}FID]}}$ = nonmethane cutter ethane penetration fraction, according to §1065.365(e).

Example:

$x_{\mathrm{THC[THC\text{–}FID]cor}}$ = 150.3 μmol/mol

$PF_{\mathrm{CH4[NMC\text{–}FID]}}$ = 0.990

$x_{\mathrm{THC[NMC\text{–}FID]cor}}$ = 20.5 μmol/mol

$PF_{\mathrm{C2H6[NMC\text{–}FID]}}$ = 0.020

$$x_{\mathrm{NMHC}} = \frac{150.3 \cdot 0.990 - 20.5}{0.990 - 0.020}$$

x_{NMHC} = 132.3 μmol/mol

(iii) For penetration fractions determined using an NMC configuration as outlined in section §1065.365(f), use the following equation:

$$x_{\mathrm{NMHC}} = \frac{x_{\mathrm{THC[THC\text{-}FID]cor}} \cdot PF_{\mathrm{CH4[NMC\text{-}FID]}} - x_{\mathrm{THC[NMC\text{-}FID]cor}} \cdot RF_{\mathrm{CH4[THC\text{-}FID]}}}{PF_{\mathrm{CH4[NMC\text{-}FID]}} - RFPF_{\mathrm{C2H6[NMC\text{-}FID]}} \cdot RF_{\mathrm{CH4[THC\text{-}FID]}}} \qquad \text{Eq. 1065.660-4}$$

Where:

x_{NMHC} = concentration of NMHC.

$x_{\mathrm{THC[THC\text{–}FID]cor}}$ = concentration of THC, HC contamination and dry-to-wet corrected, as measured by the THC FID during sampling while bypassing the NMC.

$PF_{\mathrm{CH4[NMC\text{–}FID]}}$ = nonmethane cutter CH_4 penetration fraction, according to §1065.365(f).

$x_{THC[NMC-FID]cor}$ = concentration of THC, HC contamination (optional) and dry-to-wet corrected, as measured by the THC FID during sampling through the NMC.

$RFPF_{C2H6[NMC-FID]}$ = nonmethane cutter CH_4 combined ethane response factor and penetration fraction, according to §1065.365(f).

$RF_{CH4[THC-FID]}$ = response factor of THC FID to CH_4, according to §1065.360(d).

Example:

$x_{THC[THC-FID]cor}$ = 150.3 μmol/mol
$PF_{CH4[NMC-FID]}$ = 0.990
$x_{THC[NMC-FID]cor}$ = 20.5 μmol/mol
$RFPF_{C2H6[NMC-FID]}$ = 0.019
$RF_{CH4[THC-FID]}$ = 0.980

$$x_{NMHC} = \frac{150.3 \cdot 0.990 - 20.5 \cdot 0.980}{0.990 - 0.019 \cdot 0.980}$$

x_{NMHC} = 132.5 μmol/mol

(3) For a gas chromatograph, calculate x_{NMHC} using the THC analyzer's response factor (RF) for CH_4, from §1065.360, and the HC contamination and dry-to-wet corrected initial THC concentration $x_{THC[THC-FID]cor}$ as determined in paragraph (a) of this section as follows:

$$x_{NMHC} = x_{THC[THC\text{-}FID]cor} - RF_{CH4[THC\text{-}FID]} \cdot x_{CH4} \qquad \text{Eq. 1065.660-5}$$

Where:

x_{NMHC} = concentration of NMHC.

$x_{THC[THC-FID]cor}$ = concentration of THC, HC contamination and dry-to-wet corrected, as measured by the THC FID.

x_{CH4} = concentration of CH_4, HC contamination (optional) and dry-to-wet corrected, as measured by the gas chromatograph FID.

$RF_{CH4[THC-FID]}$ = response factor of THC-FID to CH_4.

Example:

$x_{THC[THC-FID][cor}$ = 145.6 μmol/mol
$RF_{CH4[THC-FID]}$ = 0.970
x_{CH4} = 18.9 μmol/mol
x_{NMHC} = 145.6 − 0.970 · 18.9

x_{NMHC} = 127.3 μmol/mol

(c) *CH_4 determination*. Use one of the following methods to determine CH_4 concentration, x_{CH4}:

(1) For nonmethane cutters, calculate x_{CH4} using the nonmethane cutter's penetration fractions (*PF*) of CH_4 and C_2H_6 from §1065.365, using the dry-to-wet corrected CH_4 concentration $x_{THC[NMC-FID]cor}$ as determined in paragraph (a) of this section and optionally using the CH_4 contamination correction under paragraph (a) of this section.

(i) Use the following equation for penetration fractions determined using an NMC configuration as outlined in §1065.365(d):

$$x_{CH4} = \frac{x_{THC[NMC\text{-}FID]cor} - x_{THC[THC\text{-}FID]cor} \cdot RFPF_{C2H6[NMC\text{-}FID]}}{1 - RFPF_{C2H6[NMC\text{-}FID]} \cdot RF_{CH4[THC\text{-}FID]}} \qquad \text{Eq. 1065.660-6}$$

Where:

x_{CH4} = concentration of CH_4.

$x_{THC[NMC-FID]cor}$ = concentration of THC, HC contamination (optional) and dry-to-wet corrected, as measured by the NMC FID during sampling through the NMC.

$x_{THC[THC-FID]cor}$ = concentration of THC, HC contamination and dry-to-wet corrected, as measured by the THC

FID during sampling while bypassing the NMC.

$RFPF_{C2H6[NMC-FID]}$ = the combined ethane response factor and penetration fraction of the nonmethane cutter, according to §1065.365(d).

$RF_{CH4[THC-FID]}$ = response factor of THC FID to CH_4, according to §1065.360(d).

Example:

$x_{THC[NMC-FID]cor}$ = 10.4 μmol/mol

$x_{THC[THC-FID]cor}$ = 150.3 μmol/mol

$RFPF_{C2H6[NMC-FID]}$ = 0.019

$RF_{CH4[THC-FID]}$ = 1.05

$$x_{CH4} = \frac{10.4 - 150.3 \cdot 0.019}{1 - 0.019 \cdot 1.05}$$

x_{CH4} = 7.69 μmol/mol

(ii) For penetration fractions determined using an NMC configuration as outlined in §1065.365(e), use the following equation:

$$x_{CH4} = \frac{x_{THC[NMC\text{-}FID]cor} - x_{THC[THC\text{-}FID]cor} \cdot PF_{C2H6[NMC\text{-}FID]}}{RF_{CH4[THC\text{-}FID]} \cdot \left(PF_{CH4[NMC\text{-}FID]} - PF_{C2H6[NMC\text{-}FID]}\right)} \qquad \text{Eq. 1065.660-7}$$

Where:

x_{CH4} = concentration of CH_4.

$x_{THC[NMC-FID]cor}$ = concentration of THC, HC contamination (optional) and dry-to-wet corrected, as measured by the NMC FID during sampling through the NMC.

$x_{THC[THC-FID]cor}$ = concentration of THC, HC contamination and dry-to-wet corrected, as measured by the THC FID during sampling while bypassing the NMC.

$PF_{C2H6[NMC-FID]}$ = nonmethane cutter ethane penetration fraction, according to §1065.365(e).

$RF_{CH4[THC-FID]}$ = response factor of THC FID to CH_4, according to §1065.360(d).

$PF_{CH4[NMC-FID]}$ = nonmethane cutter CH_4 penetration fraction, according to §1065.365(e).

Example:

$x_{THC[NMC-FID]cor}$ = 10.4 μmol/mol

$x_{THC[THC-FID]cor}$ = 150.3 μmol/mol

$PF_{C2H6[NMC-FID]}$ = 0.020

$RF_{CH4[THC-FID]}$ = 1.05

$PF_{CH4[NMC-FID]}$ = 0.990

$$x_{CH4} = \frac{10.4 - 150.3 \cdot 0.020}{1.05 \cdot (0.990 - 0.020)}$$

x_{CH4} = 7.25 μmol/mol

(iii) For penetration fractions determined using an NMC configuration as outlined in §1065.365(f), use the following equation:

$$x_{CH4} = \frac{x_{THC[NMC\text{-}FID]cor} - x_{THC[THC\text{-}FID]cor} \cdot RFPF_{C2H6[NMC\text{-}FID]}}{PF_{CH4[NMC\text{-}FID]} - RFPF_{C2H6[NMC\text{-}FID]} \cdot RF_{CH4[THC\text{-}FID]}} \qquad \text{Eq. 1065.660-8}$$

Where:

x_{CH4} = concentration of CH_4.

$x_{THC[NMC-FID]cor}$ = concentration of THC, HC contamination (optional) and dry-to-wet corrected, as measured by the NMC FID during sampling through the NMC.

$x_{THC[THC-FID]cor}$ = concentration of THC, HC contamination and dry-to-wet corrected, as measured by the THC FID during sampling while bypassing the NMC.

$RFPF_{C2H6[NMC-FID]}$ = the combined ethane response factor and penetration fraction of the nonmethane cutter, according to §1065.365(f).

$PF_{CH4[NMC-FID]}$ = nonmethane cutter CH_4 penetration fraction, according to §1065.365(f).

$RF_{CH4[THC-FID]}$ = response factor of THC FID to CH_4, according to §1065.360(d).

Example:

$x_{THC[NMC-FID]cor}$ = 10.4 μmol/mol

$x_{THC[THC-FID]cor}$ = 150.3 μmol/mol

$RFPF_{C2H6[NMC–FID]} = 0.019$
$PF_{CH4[NMC–FID]} = 0.990$
$RF_{CH4[THC–FID]} = 1.05$

$$x_{CH4} = \frac{10.4 - 150.3 \cdot 0.019}{0.990 - 0.019 \cdot 1.05}$$

$x_{CH4} = 7.78$ µmol/mol

(2) For a gas chromatograph, x_{CH4} is the actual dry-to-wet corrected CH_4 concentration as measured by the analyzer.

[73 FR 37336, June 30, 2008, as amended at 73 FR 59339, Oct. 8, 2008; 74 FR 56516, Oct. 30, 2009; 75 FR 68464, Nov. 8, 2010]

§ 1065.665 THCE and NMHCE determination.

(a) If you measured an oxygenated hydrocarbon's mass concentration, first calculate its molar concentration in the exhaust sample stream from which the sample was taken (raw or diluted exhaust), and convert this into a C_1-equivalent molar concentration. Add these C_1-equivalent molar concentrations to the molar concentration of NOTHC. The result is the molar concentration of THCE. Calculate THCE concentration using the following equations, noting that equation 1065.665–3 is only required if you need to convert your OHC concentration from mass to moles:

$$x_{THCE} = x_{NOTHC} + \sum_{i=1}^{N} \left(x_{OHCi} - x_{OHCi\text{-init}} \right) \qquad \text{Eq. 1065.665-1}$$

$$x_{NOTHC} = x_{THC[THC\text{-}FID]cor} - \sum_{i=1}^{N} \left(x_{OHCi} \cdot RF_{OHCi[THC\text{-}FID]} \right) \qquad \text{Eq. 1065.665-2}$$

$$x_{OHCi} = \frac{\dfrac{m_{dexhOHCi}}{M_{OHCi}}}{\dfrac{m_{dexh}}{M_{dexh}}} = \frac{n_{dexhOHCi}}{n_{dexh}} \qquad \text{Eq. 1065.665-3}$$

Where:

x_{THCE} = The C_1-equivalent sum of the concentration of carbon mass contributions of non-oxygenated hydrocarbons, alcohols, and aldehydes.

x_{NOTHC} = The C_1-equivalent sum of the concentration of nonoxygenated THC.

x_{OHCi} = The C_1-equivalent concentration of oxygenated species i in diluted exhaust, not corrected for initial contamination.

$x_{OHCi\text{-init}}$ = The C_1-equivalent concentration of the initial system contamination (optional) of oxygenated species i, dry-to-wet corrected.

$x_{THC[THC\text{-}FID]cor}$ = The C_1-equivalent response to NOTHC and all OHC in diluted exhaust, HC contamination and dry-to-wet corrected, as measured by the THC-FID.

$RF_{OHCi[THC\text{-}FID]}$ = The response factor of the FID to species i relative to propane on a C_1-equivalent basis.

$C^{\#}$ = The mean number of carbon atoms in the particular compound.

M_{dexh} = The molar mass of diluted exhaust as determined in § 1065.340.

$m_{dexhOHCi}$ = The mass of oxygenated species i in dilute exhaust.

M_{OHCi} = The C_1-equivalent molecular weight of oxygenated species i.

m_{dexh} = The mass of diluted exhaust.

$n_{dexhOHCi}$ = The number of moles of oxygenated species i in total diluted exhaust flow.

n_{dexh} = The total diluted exhaust flow.

(b) If we require you to determine NMHCE, use the following equation:

$$x_{NMHCE} = x_{THCE} - RF_{CH4[THC\text{-}FID]} \cdot x_{CH4} \qquad \text{Eq. 1065.665-4}$$

Where:

x_{NMHCE} = The C_1-equivalent sum of the concentration of carbon mass contributions of non-oxygenated NMHC, alcohols, and aldehydes.

$RF_{CH4[THC-FID]}$ = response factor of THC–FID to CH_4.

x_{CH4} = concentration of CH_4, HC contamination (optional) and dry-to-wet corrected, as measured by the gas chromatograph FID.

(c) The following example shows how to determine NMHCE emissions based on ethanol (C_2H_5OH), methanol (CH_3OH), acetaldehyde (C_2H_4O), and formaldehyde (HCHO) as C_1-equivalent molar concentrations:

$x_{THC[THC-FID]cor}$ = 145.6 μmol/mol
x_{CH4} = 18.9 μmol/mol
x_{C2H5OH} = 100.8 μmol/mol
x_{CH3OH} = 1.1 μmol/mol
x_{C2H4O} = 19.1 μmol/mol
x_{HCHO} = 1.3 μmol/mol
$RF_{CH4[THC-FID]}$ = 1.07
$RF_{C2H5OH[THC-FID]}$ = 0.76
$RF_{CH3OH[THC-FID]}$ = 0.74
$RF_{H2H4O[THC-FID]}$ = 0.50
$RF_{HCHO[THC-FID]}$ = 0.0

$$x_{NMHCE} = x_{THC[THC-FID]cor} - (x_{C2H5OH} \cdot RF_{C2H5OH[THC-FID]} + x_{CH3OH} \cdot RF_{CH3OH[THC-FID]} + x_{C2H4O} \cdot RF_{C2H4O[THC-FID]} + x_{HCHO} \cdot RF_{HCHO[THC-FID]} + x_{C2H5OH} + x_{CH3OH} + x_{C2H4O} + x_{HCHO} - (RF_{CH4[THC-FID]} \cdot x_{CH4})$$

$$x_{NMHCE} = 145.6 - (100.8 \cdot 0.76 + 1.1 \cdot 0.74 + 19.1 \cdot 0.50 + 1.3 \cdot 0) + 100.8 + 1.1 + 19.1 + 1.3 - (1.07 \cdot 18.9)$$

x_{NMHCE} = 160.71 μmol/mol

[73 FR 37337, June 30, 2008]

§ 1065.667 Dilution air background emission correction.

(a) To determine the mass of background emissions to subtract from a diluted exhaust sample, first determine the total flow of dilution air, n_{dil}, over the test interval. This may be a measured quantity or a quantity calculated from the diluted exhaust flow and the flow-weighted mean fraction of dilution air in diluted exhaust, $\bar{x}_{dil/exh}$. Multiply the total flow of dilution air by the mean concentration of a background emission. This may be a time-weighted mean or a flow-weighted mean (e.g., a proportionally sampled background). The product of n_{dil} and the mean concentration of a background emission is the total amount of a background emission. If this is a molar quantity, convert it to a mass by multiplying it by its molar mass, M. The result is the mass of the background emission, m. In the case of PM, where the mean PM concentration is already in units of mass per mole of sample, $\bar{M}_{PM}$, multiply it by the total amount of dilution air, and the result is the total background mass of PM, m_{PM}. Subtract total background masses from total mass to correct for background emissions.

(b) You may determine the total flow of dilution air by a direct flow measurement. In this case, calculate the total mass of background as described in §1065.650(c), using the dilution air flow, n_{dil}. Subtract the background mass from the total mass. Use the result in brake-specific emission calculations.

(c) You may determine the total flow of dilution air from the total flow of diluted exhaust and a chemical balance of the fuel, intake air, and exhaust as described in §1065.655. In this case, calculate the total mass of background as described in §1065.650(c), using the total flow of diluted exhaust, n_{dexh}, then multiply this result by the flow-weighted mean fraction of dilution air in diluted exhaust, $\bar{x}_{dil/exh}$. Calculate $\bar{x}_{dil/exh}$ using flow-weighted mean concentrations of emissions in the chemical balance, as described in §1065.655. You may assume that your engine operates stoichiometrically, even if it is a lean-burn engine, such as a compression-ignition engine. Note that for lean-burn engines this assumption could result in an error in emission calculations. This error could occur because the chemical balances in §1065.655 correct excess air passing through a lean-burn engine as if it was dilution air. If an emission concentration expected at the standard

is about 100 times its dilution air background concentration, this error is negligible. However, if an emission concentration expected at the standard is similar to its background concentration, this error could be significant. If this error might affect your ability to show that your engines comply with applicable standards, we recommend that you remove background emissions from dilution air by HEPA filtration, chemical adsorption, or catalytic scrubbing. You might also consider using a partial-flow dilution technique such as a bag mini-diluter, which uses purified air as the dilution air.

(d) The following is an example of using the flow-weighted mean fraction of dilution air in diluted exhaust, $\bar{x}_{dil/exh}$, and the total mass of background emissions calculated using the total flow of diluted exhaust, $n_{dexh,}$ as described in § 1065.650(c):

$$m_{bkgnd} = \bar{x}_{dil/exh} \cdot m_{bkgnddexh} \qquad \text{Eq. 1065.667-1}$$

$$m_{bkgnddexh} = M \cdot \bar{x}_{bkgnd} \cdot n_{dexh} \qquad \text{Eq. 1065.667-2}$$

Example:
M_{NOx} = 46.0055 g/mol
$\bar{x}_{bkgnd}$ = 0.05 µmol/mol = $0.05 \cdot 10^{-6}$ mol/mol
n_{dexh} = 23280.5 mol

$\bar{x}_{dil/exh}$ = 0.843 mol/mol
$m_{bkgndNOxdexh} = 46.0055 \cdot 0.05 \cdot 10^{-6} \cdot 23280.5$
$m_{bkgndNOxdexh}$ = 0.0536 g
$m_{bkgndNOx} = 0.843 \cdot 0.0536$
$m_{bkgndNOx}$ = 0.0452 g

(e) The following is an example of using the fraction of dilution air in diluted exhaust, $x_{dil/exh}$, and the mass rate of background emissions calculated using the flow rate of diluted exhaust, $\dot{n}_{dexh}$, as described in § 1065.650(c):

$$\dot{m}_{bkgnd} = x_{dil/exh} \cdot \dot{m}_{bkgnddexh} \qquad \text{Eq. 1065.667-3}$$

$$\dot{m}_{bkgnddexh} = M \cdot x_{bkgnd} \cdot \dot{n}_{dexh} \qquad \text{Eq. 1065.667-4}$$

Example:
M_{NOx} = 46.0055 g/mol
x_{bkgnd} = 0.05 µmol/mol = $0.05 \cdot 10^{-6}$ mol/mol
$\dot{n}_{dexh}$ = 23280.5 mol/s
$x_{dil/exh}$ = 0.843 mol/mol
$\dot{m}_{bkgndNOxdexh} = 36.0055 \cdot 0.05 \cdot 10^{-6} \cdot 23280.5$
$\dot{m}_{bkgndNOXdexh}$ = 0.0536 g/hr
$\dot{m}_{bkgndNOx} = 0.843 \cdot 0.0536$
$\dot{m}_{bkgndNOx}$ = 0.0452 g/hr

[73 FR 59339, Oct. 8, 2008, as amended at 75 FR 23055, Apr. 30, 2010]

§ 1065.670 NO_X intake-air humidity and temperature corrections.

See the standard-setting part to determine if you may correct NO_X emissions for the effects of intake-air humidity or temperature. Use the NO_X intake-air humidity and temperature corrections specified in the standard-setting part instead of the NO_X intake-air humidity correction specified in this part 1065. If the standard-setting part does not prohibit correcting NO_X emissions for intake-air humidity according to this part 1065, first apply any NO_X corrections for background emissions and water removal from the exhaust sample, then correct NO_X concentrations for intake-air humidity. You may use a time-weighted mean combustion air humidity to calculate this correction if your combustion air humidity remains within a tolerance of ±0.0025 mol/mol of the mean value over the test interval. For intake-air humidity correction, use one of the following approaches:

(a) For compression-ignition engines, correct for intake-air humidity using the following equation:

$$x_{NOxcor} = x_{NOxuncor} \cdot (9.953 \cdot x_{H20} + 0.832) \qquad \text{Eq. 1065.670-1}$$

Example:

$x_{NOxuncor}$ = 700.5 μmol/mol
x_{H2O} = 0.022 mol/mol
x_{NOxcor} = 700.5 · (9.953 · 0.022 + 0.832)
x_{NOxcor} = 736.2 μmol/mol

(b) For spark-ignition engines, correct for intake-air humidity using the following equation:

$$x_{NOxcor} = x_{NOxuncor} \cdot (18.840 \cdot x_{H20} + 0.68094) \qquad \text{Eq. 1065.670-2}$$

Example:

$x_{NOxuncor}$ = 154.7 μmol/mol
x_{H2O} = 0.022 mol/mol
x_{NOxcor} = 154.7 · (18.840 · 0.022 + 0.68094)
x_{NOxcor} = 169.5 μmol/mol

(c) Develop your own correction, based on good engineering judgment.

[75 FR 23056, Apr. 30, 2010]

§ 1065.672 Drift correction.

(a) *Scope and frequency*. Perform the calculations in this section to determine if gas analyzer drift invalidates the results of a test interval. If drift does not invalidate the results of a test interval, correct that test interval's gas analyzer responses for drift according to this section. Use the drift-corrected gas analyzer responses in all subsequent emission calculations. Note that the acceptable threshold for gas analyzer drift over a test interval is specified in § 1065.550 for both laboratory testing and field testing.

(b) *Correction principles*. The calculations in this section utilize a gas analyzer's responses to reference zero and span concentrations of analytical gases, as determined sometime before and after a test interval. The calculations correct the gas analyzer's responses that were recorded during a test interval. The correction is based on an analyzer's mean responses to reference zero and span gases, and it is based on the reference concentrations of the zero and span gases themselves. Validate and correct for drift as follows:

(c) *Drift validation*. After applying all the other corrections—except drift correction—to all the gas analyzer signals, calculate brake-specific emissions according to § 1065.650. Then correct all gas analyzer signals for drift according to this section. Recalculate brake-specific emissions using all of the drift-corrected gas analyzer signals. Validate and report the brake-specific emission results before and after drift correction according to § 1065.550.

(d) *Drift correction*. Correct all gas analyzer signals as follows:

(1) Correct each recorded concentration, x_i, for continuous sampling or for batch sampling, $\bar{x}$.

(2) Correct for drift using the following equation:

$$x_{idriftcorrected} = x_{refzero} + (x_{refspan} - x_{refzero}) \cdot \frac{2x_i - (x_{prezero} + x_{postzero})}{(x_{prespan} + x_{postspan}) - (x_{prezero} + x_{postzero})}$$

Eq. 1065.672-1

Where:

$x_{idriftcorrected}$ = concentration corrected for drift.

$x_{refzero}$ = reference concentration of the zero gas, which is usually zero unless known to be otherwise.

$x_{refspan}$ = reference concentration of the span gas.

$x_{prespan}$ = pre-test interval gas analyzer response to the span gas concentration.

$x_{postspan}$ = post-test interval gas analyzer response to the span gas concentration.

x_i or $\bar{x}$ = concentration recorded during test, before drift correction.

$x_{prezero}$ = pre-test interval gas analyzer response to the zero gas concentration.

$x_{postzero}$ = post-test interval gas analyzer response to the zero gas concentration.

Example:

$x_{refzero}$ = 0 μmol/mol
$x_{refspan}$ = 1800.0 μmol/mol
$x_{prespan}$ = 1800.5 μmol/mol
$x_{postspan}$ = 1695.8 μmol/mol
x_i or $\bar{x}$ = 435.5 μmol/mol
$x_{prezero}$ = 0.6 μmol/mol
$x_{postzero}$ = −5.2 μmol/mol

$$x_{idriftcorrected} = 0 + (1800.0 - 0) \cdot \frac{2 \cdot 435.5 - (0.6 + (-5.2))}{(1800.5 + 1695.8) - (0.6 + (-5.2))}$$

$x_{idriftcorrected}$ = 450.2 μmol/mol

(3) For any pre-test interval concentrations, use concentrations determined most recently before the test interval. For some test intervals, the most recent pre-zero or pre-span might have occurred before one or more previous test intervals.

(4) For any post-test interval concentrations, use concentrations determined most recently after the test interval. For some test intervals, the most recent post-zero or post-span might have occurred after one or more subsequent test intervals.

(5) If you do not record any pre-test interval analyzer response to the span gas concentration, $x_{prespan}$, set $x_{prespan}$ equal to the reference concentration of the span gas:

$x_{prespan} = x_{refspan}$.

(6) If you do not record any pre-test interval analyzer response to the zero gas concentration, $x_{prezero}$, set $x_{prezero}$ equal to the reference concentration of the zero gas:

$x_{prezero} = x_{refzero}$.

(7) Usually the reference concentration of the zero gas, $x_{refzero}$, is zero: $x_{refzero}$ = 0 μmol/mol. However, in some cases you might know that $x_{refzero}$ has a non-zero concentration. For example, if you zero a CO_2 analyzer using ambient air, you may use the default ambient air concentration of CO_2, which is 375 μmol/mol. In this case, $x_{refzero}$ = 375 μmol/mol. Note that when you zero an analyzer using a non-zero $x_{refzero}$, you must set the analyzer to output the actual $x_{refzero}$ concentration. For example, if $x_{refzero}$ = 375 μmol/mol, set the analyzer to output a value of 375 μmol/mol when the zero gas is flowing to the analyzer.

[70 FR 40516, July 13, 2005, as amended at 74 8427, Feb. 24, 2009; 75 FR 23056, Apr. 30, 2010]

§ 1065.675 CLD quench verification calculations.

Perform CLD quench-check calculations as follows:

(a) Perform a CLD analyzer quench verification test as described in § 1065.370.

(b) Estimate the maximum expected mole fraction of water during emission testing, x_{H2Oexp}. Make this estimate where the humidified NO span gas was introduced in § 1065.370(e)(6). When estimating the maximum expected mole fraction of water, consider the maximum expected water content in combustion air, fuel combustion products, and dilution air (if applicable). If you introduced the humidified NO span gas into the sample system upstream of a sample dryer during the verification test, you need not estimate the maximum expected mole fraction of water and you must set x_{H2Oexp} equal to $x_{H2Omeas}$.

(c) Estimate the maximum expected CO_2 concentration during emission testing, x_{CO2exp}. Make this estimate at the sample system location where the blended NO and CO_2 span gases are introduced according to § 1065.370(d)(10). When estimating the maximum expected CO_2 concentration, consider the maximum expected CO_2 content in fuel combustion products and dilution air.

(d) Calculate quench as follows:

$$quench = \left(\left(\frac{\frac{x_{NOwet}}{1 - x_{H2Omeas}}}{x_{NOdry}} - 1 \right) \cdot \frac{x_{H2O\,exp}}{x_{H2Omeas}} + \left(\frac{x_{NOmeas}}{x_{NOact}} - 1 \right) \cdot \frac{x_{CO2\,exp}}{x_{CO2act}} \right) \cdot 100\% \qquad \text{Eq. 1065.675-1}$$

Where:

quench = amount of CLD quench.

x_{NOdry} = concentration of NO upstream of a bubbler, according to §1065.370(e)(4).

x_{NOwet} = measured concentration of NO downstream of a bubbler, according to §1065.370(e)(9).

x_{H2Oexp} = maximum expected mole fraction of water during emission testing, according to paragraph (b) of this section.

$x_{H2Omeas}$ = measured mole fraction of water during the quench verification, according to §1065.370(e)(7).

x_{NOmeas} = measured concentration of NO when NO span gas is blended with CO_2 span gas, according to §1065.370(d)(10).

x_{NOact} = actual concentration of NO when NO span gas is blended with CO_2 span gas, according to §1065.370(d)(11) and calculated according to Equation 1065.675–2.

x_{CO2exp} = maximum expected concentration of CO_2 during emission testing, according to paragraph (c) of this section.

x_{CO2act} = actual concentration of CO_2 when NO span gas is blended with CO_2 span gas, according to §1065.370(d)(9).

$$x_{NOact} = \left(1 - \frac{x_{CO2act}}{x_{CO2span}} \right) \cdot x_{NOspan} \qquad \text{Eq.1065.675} - 2$$

Where:

x_{NOspan} = the NO span gas concentration input to the gas divider, according to §1065.370(d)(5).

$x_{CO2span}$ = the CO_2 span gas concentration input to the gas divider, according to §1065.370(d)(4).

Example:

x_{NOdry} = 1800.0 μmol/mol
x_{NOwet} = 1729.6 μmol/mol
x_{H2Oexp} = 0.030 mol/mol
$x_{H2Omeas}$ = 0.030 mol/mol
x_{NOmeas} = 1495.2 μmol/mol
x_{NOspan} = 3001.6 μmol/mol
x_{CO2exp} = 3.2%
$x_{CO2span}$ = 6.00%
x_{CO2act} = 2.98%

$$x_{NOact} = \left(1 - \frac{2.98}{6.00} \right) \cdot 3001.6 = 1510.8\ \mu mol/mol$$

$$quench = \left(\left(\frac{\frac{1729.6}{1 - 0.030}}{1800.0} - 1 \right) \cdot \frac{0.030}{0.030} + \left(\frac{1495.2}{1510.8} - 1 \right) \cdot \frac{3.2}{2.98} \right) \cdot 100\%$$

quench = (−0.00939–0.01109) · 100% = −2.0048% = −2%

[73 FR 59340, Oct. 8, 2008]

§1065.690 Buoyancy correction for PM sample media.

(a) *General.* Correct PM sample media for their buoyancy in air if you weigh them on a balance. The buoyancy correction depends on the sample media

density, the density of air, and the density of the calibration weight used to calibrate the balance. The buoyancy correction does not account for the buoyancy of the PM itself, because the mass of PM typically accounts for only (0.01 to 0.10)% of the total weight. A correction to this small fraction of mass would be at the most 0.010%.

(b) *PM sample media density*. Different PM sample media have different densities. Use the known density of your sample media, or use one of the densities for some common sampling media, as follows:

(1) For PTFE-coated borosilicate glass, use a sample media density of 2300 kg/m³.

(2) For PTFE membrane (film) media with an integral support ring of polymethylpentene that accounts for 95% of the media mass, use a sample media density of 920 kg/m³.

(3) For PTFE membrane (film) media with an integral support ring of PTFE, use a sample media density of 2144 kg/m³.

(c) *Air density*. Because a PM balance environment must be tightly controlled to an ambient temperature of (22 ±1) °C and humidity has an insignificant effect on buoyancy correction, air density is primarily a function of atmospheric pressure. Therefore you may use nominal constant values for temperature and humidity in the buoyancy correction equation in Eq. 1065.690–2.

(d) *Calibration weight density*. Use the stated density of the material of your metal calibration weight. The example calculation in this section uses a density of 8000 kg/m³, but you should know the density of your weight from the calibration weight supplier or the balance manufacturer if it is an internal weight.

(e) *Correction calculation*. Correct the PM sample media for buoyancy using the following equations:

$$m_{cor} = m_{uncor} \cdot \left[\frac{1 - \frac{\rho_{air}}{\rho_{weight}}}{1 - \frac{\rho_{air}}{\rho_{media}}} \right] \qquad \text{Eq. 1065.690-1}$$

Where:

m_{cor} = PM mass corrected for buoyancy.

m_{uncor} = PM mass uncorrected for buoyancy.

ρ_{air} = density of air in balance environment.

ρ_{weight} = density of calibration weight used to span balance.

ρ_{media} = density of PM sample media, such as a filter.

$$\rho_{air} = \frac{p_{abs} \cdot M_{mix}}{R \cdot T_{amb}} \qquad \text{Eq.1065.690-2}$$

Where:

p_{abs} = absolute pressure in balance environment.

M_{mix} = molar mass of air in balance environment.

R = molar gas constant.

T_{amb} = absolute ambient temperature of balance environment.

Example:

p_{abs} = 99.980 kPa

$T_{sat} = T_{dew}$ = 9.5 °C

Using Eq. 1065.645–1,

p_{H20} = 1.1866 kPa

Using Eq. 1065.645–3,

x_{H2O} = 0.011868 mol/mol

Using Eq. 1065.640–9,

M_{mix} = 28.83563 g/mol

R = 8.314472 J/(mol·K)

T_{amb} = 20 °C

$$\rho_{air} = \frac{99.980 \cdot 28.83563}{8.314472 \cdot 293.15}$$

ρ_{air} = 1.18282 kg/m^3
m_{uncorr} = 100.0000 mg

ρ_{weight} = 8000 kg/m^3
ρ_{media} = 920 kg/m^3

$$m_{cor} = 100.0000 \cdot \left[\frac{1 - \frac{1.18282}{8000}}{1 - \frac{1.18282}{920}}\right]$$

m_{cor} = 100.1139 mg

[70 FR 40516, July 13, 2005, as amended at 73 FR 37339, June 30, 2008; 75 FR 23056, Apr. 30, 2010]

§ 1065.695 Data requirements.

(a) To determine the information we require from engine tests, refer to the standard-setting part and request from your Designated Compliance Officer the format used to apply for certification or demonstrate compliance. We may require different information for different purposes, such as for certification applications, approval requests for alternate procedures, selective enforcement audits, laboratory audits, production-line test reports, and field-test reports.

(b) See the standard-setting part and § 1065.25 regarding recordkeeping.

(c) We may ask you the following about your testing, and we may ask you for other information as allowed under the Act:

(1) What approved alternate procedures did you use? For example:

(i) Partial-flow dilution for proportional PM.

(ii) CARB test procedures.

(iii) ISO test procedures.

(2) What laboratory equipment did you use? For example, the make, model, and description of the following:

(i) Engine dynamometer and operator demand.

(ii) Probes, dilution, transfer lines, and sample preconditioning components.

(iii) Batch storage media (such as the bag material or PM filter material).

(3) What measurement instruments did you use? For example, the make, model, and description of the following:

(i) Speed and torque instruments.

(ii) Flow meters.

(iii) Gas analyzers.

(iv) PM balance.

(4) When did you conduct calibrations and performance checks and what were the results? For example, the dates and results of the following:

(i) Linearity checks.

(ii) Interference checks.

(iii) Response checks.

(iv) Leak checks.

(v) Flow meter checks.

(5) What engine did you test? For example, the following:

(i) Manufacturer.

(ii) Family name on engine label.

(iii) Model.

(iv) Model year.

(v) Identification number.

(6) How did you prepare and configure your engine for testing? Consider the following examples:

(i) Dates, hours, duty cycle and fuel used for service accumulation.

(ii) Dates and description of scheduled and unscheduled maintenance.

(iii) Allowable pressure range of intake restriction.

(iv) Allowable pressure range of exhaust restriction.

(v) Charge air cooler volume.

(vi) Charge air cooler outlet temperature, specified engine conditions and location of temperature measurement.

(vii) Fuel temperature and location of measurement.

(viii) Any aftertreatment system configuration and description.

(ix) Any crankcase ventilation configuration and description (e.g., open, closed, PCV, crankcase scavenged).

(7) How did you test your engine? For example:

(i) Constant speed or variable speed.

(ii) Mapping procedure (step or sweep).

(iii) Continuous or batch sampling for each emission.

(iv) Raw or dilute sampling; any dilution-air background sampling.

(v) Duty cycle and test intervals.

(vi) Cold-start, hot-start, warmed-up running.

(vii) Absolute pressure, temperature, and dewpoint of intake and dilution air.

(viii) Simulated engine loads, curb idle transmission torque value.

(ix) Warm-idle speed value.

(x) Simulated vehicle signals applied during testing.

(xi) Bypassed governor controls during testing.

(xii) Date, time, and location of test (e.g., dynamometer laboratory identification).

(xiii) Cooling medium for engine and charge air.

(xiv) Operating temperatures of coolant, head, and block.

(xv) Natural or forced cool-down and cool-down time.

(xvi) Canister loading.

(8) How did you validate your testing? For example, results from the following:

(i) Duty cycle regression statistics for each test interval.

(ii) Proportional sampling.

(iii) Drift.

(iv) Reference PM sample media in PM-stabilization environment.

(9) How did you calculate results? For example, results from the following:

(i) Drift correction.

(ii) Noise correction.

(iii) ''Dry-to-wet'' correction.

(iv) NMHC, CH_4, and contamination correction.

(v) NO_X humidity correction.

(vi) Brake-specific emission formulation—total mass divided by total work, mass rate divided by power, or ratio of mass to work.

(vii) Rounding emission results.

(10) What were the results of your testing? For example:

(i) Maximum mapped power and speed at maximum power.

(ii) Maximum mapped torque and speed at maximum torque.

(iii) For constant-speed engines: no-load governed speed.

(iv) For constant-speed engines: test torque.

(v) For variable-speed engines: maximum test speed.

(vi) Speed versus torque map.

(vii) Speed versus power map.

(viii) Brake-specific emissions over the duty cycle and each test interval.

(ix) Brake-specific fuel consumption.

(11) What fuel did you use? For example:

(i) Fuel that met specifications of subpart H of this part.

(ii) Alternate fuel.

(iii) Oxygenated fuel.

(12) How did you field test your engine? For example:

(i) Data from paragraphs (c)(1), (3), (4), (5), and (9) of this section.

(ii) Probes, dilution, transfer lines, and sample preconditioning components.

(iii) Batch storage media (such as the bag material or PM filter material).

(iv) Continuous or batch sampling for each emission.

(v) Raw or dilute sampling; any dilution air background sampling.

(vi) Cold-start, hot-start, warmed-up running.

(vii) Intake and dilution air absolute pressure, temperature, dewpoint.

(viii) Curb idle transmission torque value.

(ix) Warm idle speed value, any enhanced idle speed value.

(x) Date, time, and location of test (e.g., identify the testing laboratory).

(xi) Proportional sampling validation.

(xii) Drift validation.

(xiii) Operating temperatures of coolant, head, and block.

(xiv) Vehicle make, model, model year, identification number.

[70 FR 40516, July 13, 2005, as amended at 73 FR 37339, June 30, 2008]

Subpart H—Engine Fluids, Test Fuels, Analytical Gases and Other Calibration Standards

§ 1065.701 General requirements for test fuels.

(a) *General*. For all emission measurements, use test fuels that meet the specifications in this subpart, unless the standard-setting part directs otherwise. Section 1065.10(c)(1) does not apply with respect to test fuels. Note that the standard-setting parts generally require that you design your emission controls to function properly when using commercially available fuels, even if they differ from the test fuel.

(b) *Fuels meeting alternate specifications*. We may allow you to use a different test fuel (such as California Phase 2 gasoline) if it does not affect your ability to show that your engines would comply with all applicable emission standards using the fuel specified in this subpart.

(c) *Fuels not specified in this subpart*. If you produce engines that run on a type of fuel (or mixture of fuels) that we do not specify in this subpart, you must get our written approval to establish the appropriate test fuel. See the standard-setting part for provisions related to fuels and fuel mixtures not specified in this subpart.

(1) For engines designed to operate on a single fuel, we will generally allow you to use the fuel if you show us all the following things are true:

(i) Show that your engines will use only the designated fuel in service.

(ii) Show that this type of fuel is commercially available.

(iii) Show that operating the engines on the fuel we specify would be inappropriate, as in the following examples:

(A) The engine will not run on the specified fuel.

(B) The engine or emission controls will not be durable or work properly when operating with the specified fuel.

(C) The measured emission results would otherwise be substantially unrepresentative of in-use emissions.

(2) For engines that are designed to operate on different fuel types, the provisions of paragraphs (c)(1)(ii) and (iii) of this section apply with respect to each fuel type.

(3) For engines that are designed to operate on different fuel types as well as continuous mixtures of those fuels, we may require you to test with either the worst-case fuel mixture or the most representative fuel mixture, unless the standard-setting part specifies otherwise.

(d) *Fuel specifications*. The fuel parameters specified in this subpart depend on measurement procedures that are incorporated by reference. For any of these procedures, you may instead rely upon the procedures identified in 40 CFR part 80 for measuring the same parameter. For example, we may identify different reference procedures for measuring gasoline parameters in 40 CFR 80.46.

(e) Two-stroke fuel/oil mixing. For two-stroke engines, use a fuel/oil mixture meeting the manufacturer's specifications.

(f) *Service accumulation and field testing fuels*. If we do not specify a service-accumulation or field-testing fuel in the standard-setting part, use an appropriate commercially available fuel such as those meeting minimum specifications from the following table:

TABLE 1 OF § 1065.701—EXAMPLES OF SERVICE-ACCUMULATION AND FIELD-TESTING FUELS

Fuel category	Subcategory	Reference procedure [1]
	Light distillate and light blends with residual.	ASTM D975–07b.
Diesel	Middle distillate	ASTM D6985–04a.
	Biodiesel (B100)	ASTM D6751–07b.
Intermediate and residual fuel	All	*See* § 1065.705.
Gasoline	Motor vehicle gasoline	ASTM D4814–07a.

TABLE 1 OF § 1065.701—EXAMPLES OF SERVICE-ACCUMULATION AND FIELD-TESTING FUELS—Continued

Fuel category	Subcategory	Reference procedure [1]
	Minor oxygenated gasoline blends	ASTM D4814–07a.
Alcohol	Ethanol (Ed75–85)	ASTM D5798–07.
	Methanol (M70–M85)	ASTM D5797–07.
Aviation fuel	Aviation gasoline	ASTM D910–07.
	Gas turbine	ASTM D1655–07e01.
	Jet B wide cut	ASTM D6615–06.
Gas turbine fuel	General	ASTM D2880–03l.

[1] ASTM specifications are incorporated by reference in § 1065.1010.

[70 FR 40516, July 13, 2005, as amended at 73 FR 37339, June 30, 2008; 73 FR 59341, Oct. 8, 2008; 75 FR 23057, Apr. 30, 2010]

§ 1065.703 Distillate diesel fuel.

(a) Distillate diesel fuels for testing must be clean and bright, with pour and cloud points adequate for proper engine operation.

(b) There are three grades of #2 diesel fuel specified for use as a test fuel. See the standard-setting part to determine which grade to use. If the standard-setting part does not specify which grade to use, use good engineering judgment to select the grade that represents the fuel on which the engines will operate in use. The three grades are specified in Table 1 of this section.

(c) You may use the following nonmetallic additives with distillate diesel fuels:

(1) Cetane improver.
(2) Metal deactivator.
(3) Antioxidant, dehazer.
(4) Rust inhibitor.
(5) Pour depressant.
(6) Dye.
(7) Dispersant.
(8) Biocide.

TABLE 1 OF § 1065.703—TEST FUEL SPECIFICATIONS FOR DISTILLATE DIESEL FUEL

Item	Units	Ultra low sulfur	Low sulfur	High sulfur	Reference procedure [1]
Cetane Number		40–50	40–50	40–50	ASTM D613–05.
Distillation range: Initial boiling point	°C	171–204	171–204	171–204	ASTM D86–07a.
10 pct. point		204–238	204–238	204–238	
50 pct. point		243–282	243–282	243–282	
90 pct. point		293–332	293–332	293–332	
Endpoint		321–366	321–366	321–366	
Gravity	°API	32–37	32–37	32–37	ASTM D4052–96e01.
Total sulfur, ultra low sulfur	mg/kg	7–15			*See* 40 CFR 80.580.
Total sulfur, low and high sulfur	mg/kg		300–500	800–2500	ASTM D2622–07 or alternates as allowed under 40 CFR 80.580.
Aromatics, min. (Remainder shall be paraffins, naphthalenes, and olefins)	g/kg	100	100	100	ASTM D5186–03.
Flashpoint, min	°C	54	54	54	ASTM D93–07.
Kinematic Viscosity	cSt	2.0–3.2	2.0–3.2	2.0–3.2	ASTM D445–06.

[1] ASTM procedures are incorporated by reference in § 1065.1010. *See* § 1065.701(d) for other allowed procedures.

[70 FR 40516, July 13, 2005, as amended at 73 FR 37340, June 30, 2008; 73 FR 59341, Oct. 8, 2008; 75 FR 23057, Apr. 30, 2010]

§ 1065.705 Residual and intermediate residual fuel.

This section describes the specifications for fuels meeting the definition of residual fuel in 40 CFR 80.2, including fuels marketed as intermediate fuel. Residual fuels for service accumulation and any testing must meet the following specifications:

(a) The fuel must be a commercially available fuel that is representative of the fuel that will be used by the engine in actual use.

(b) The fuel must meet the specifications for one of the categories in the following table:

TABLE 1 OF § 1065.705—SERVICE ACCUMULATION AND TEST FUEL SPECIFICATIONS FOR RESIDUAL FUEL

Characteristic	Unit	Category ISO–F–										Test method reference [1]
		RMA 30	RMB 30	RMD 80	RME 180	RMF 180	RMG 380	RMH 380	RMK 380	RMH 700	RMK 700	
Density at 15 °C, max.	kg/m³	960.0	975.0	980.0	991.0		991.0		1010.0	991.0	1010.0	ISO 3675 or ISO 12185: 1996/Cor 1:2001 (see also ISO 8217:2005(E) 7.1).
Kinematic viscosity at 50 °C, max.	cSt	30.0		80.0	180.0		380.0		700.0			ISO 3104:1994/Cor 1:1997.
Flash point, min	°C	60		60	60		60		60			ISO 2719 (see also ISO 8217:2005(E) 7.2).
Pour point (upper):												
Winter quality, max.	°C	0	24	30	30		30		30			ISO 3016.
Summer quality, max.	6	24	30	30		30		30			ISO 3016.	
Carbon residue, max.	(kg/kg)%	10		14	15	20	18	22	22			ISO 10370:1993/Cor 1:1996.
Ash, max.	(kg/kg)%	0.10		0.10	0.10	0.15	0.15		0.15			ISO 6245.
Water, max	(m³/m³)%	0.5		0.5	0.5		0.5		0.5			ISO 3733.
Sulfur, max	(kg/kg)%	3.50		4.00	4.50		4.50		4.50			ISO 8754 or ISO 14596: 1998/Cor 1:1999 (see also ISO 8217:2005(E) 7.3).
Vanadium, max	mg/kg	150		350	200	500	300	600	600			ISO 14597 or IP 501 or IP 470 (see also ISO 8217:2005(E) 7.8).

TABLE 1 OF § 1065.705—SERVICE ACCUMULATION AND TEST FUEL SPECIFICATIONS FOR RESIDUAL FUEL—Continued

Characteristic	Unit	Category ISO–F–										Test method reference [1]
		RMA 30	RMB 30	RMD 80	RME 180	RMF 180	RMG 380	RMH 380	RMK 380	RMH 700	RMK 700	
Total sediment potential, max.	(kg/kg)%	0.10		0.10	0.10		0.10		0.10			ISO 10307–2 (see also ISO 8217:2005(E) 7.6).
Aluminium plus silicon, max.	mg/kg	80		80	80		80		80			ISO 10478 or IP 501 or IP 470 (see also ISO 8217:2005(E) 7.9).
Used lubricating oil (ULO), max.	.....	Fuel shall be free of ULO. We consider a fuel to be free of ULO if one or more of the elements zinc, phosphorus, or calcium is at or below the specified limits. We consider a fuel to contain ULO if all three elements exceed the specified limits.										IP 501 or IP 470 (see ISO 8217:2005(E) 7.7). IP 501 or IP 500 (see ISO 8217:2005(E) 7.7). IP 501 or IP 470 (see ISO 8217:2005(E) 7.7).
	mg/kg	15										
Zinc	.....	15										
Phosphorus	.....	15										
Calcium	.....	30										

[1] ISO procedures are incorporated by reference in § 1065.1010. See § 1065.701(d) for other allowed procedures.

[73 FR 37340, June 30, 2008]

§ 1065.710 Gasoline.

(a) Gasoline for testing must have octane values that represent commercially available fuels for the appropriate application.

(b) There are two grades of gasoline specified for use as a test fuel. If the standard-setting part requires testing with fuel appropriate for low temperatures, use the test fuel specified for low-temperature testing. Otherwise, use the test fuel specified for general testing. The two grades are specified in Table 1 of this section.

TABLE 1 OF § 1065.710—TEST FUEL SPECIFICATIONS FOR GASOLINE

Item	Units	General testing	Low-temperature testing	Reference procedure [1]
Distillation Range:				
Initial boiling point	°C	24–35 [2]	24–36.	
10% point	°C	49–57	37–48	ASTM D86–07a.
50% point	°C	93–110	82–101.	
90% point	°C	149–163	158–174.	
End point	°C	Maximum, 213	Maximum, 212.	
Hydrocarbon composition:				
Olefins	m^3/m^3	Maximum, 0.10	Maximum, 0.175	ASTM D1319–03.
Aromatics		Maximum, 0.35	Maximum, 0.304.	
Saturates		Remainder	Remainder.	
Lead (organic)	g/liter	Maximum, 0.013	Maximum, 0.013	ASTM D3237–06e01.
Phosphorous	g/liter	Maximum, 0.0013	Maximum, 0.005	ASTM D3231–07.
Total sulfur	mg/kg	Maximum, 80	Maximum, 80	ASTM D2622–07.
Volatility (Reid Vapor Pressure).	kPa	60.0–63.4 [2, 3]	77.2–81.4	ASTM D5191–07.

[1] ASTM procedures are incorporated by reference in § 1065.1010. See § 1065.701(d) for other allowed procedures.
[2] For testing at altitudes above 1,219 m, the specified volatility range is (52.0 to 55.2) kPa and the specified initial boiling point range is (23.9 to 40.6) °C.
[3] For testing unrelated to evaporative emissions, the specified range is (55.2 to 63.4) kPa.

[70 FR 40516, July 13, 2005, as amended at 73 FR 37341, June 30, 2008]

§ 1065.715 Natural gas.

(a) Except as specified in paragraph (b) of this section, natural gas for testing must meet the specifications in the following table:

TABLE 1 OF § 1065.715—TEST FUEL SPECIFICATIONS FOR NATURAL GAS

Item	Value [1]
Methane, CH_4	Minimum, 0.87 mol/mol.
Ethane, C_2H_6	Maximum, 0.055 mol/mol.
Propane, C_3H_8	Maximum, 0.012 mol/mol.
Butane, C_4H_{10}	Maximum, 0.0035 mol/mol.
Pentane, C_5H_{12}	Maximum, 0.0013 mol/mol.
C_6 and higher	Maximum, 0.001 mol/mol.
Oxygen	Maximum, 0.001 mol/mol.
Inert gases (sum of CO_2 and N_2)	Maximum, 0.051 mol/mol.

[1] All parameters are based on the reference procedures in ASTM D1945–03 (incorporated by reference in § 1065.1010). See § 1065.701(d) for other allowed procedures.

(b) In certain cases you may use test fuel not meeting the specifications in paragraph (a) of this section, as follows:

(1) You may use fuel that your in-use engines normally use, such as pipeline natural gas.

(2) You may use fuel meeting alternate specifications if the standard-setting part allows it.

(3) You may ask for approval to use fuel that does not meet the specifications in paragraph (a) of this section,

but only if using the fuel would not adversely affect your ability to demonstrate compliance with the applicable standards.

(c) When we conduct testing using natural gas, we will use fuel that meets the specifications in paragraph (a) of this section.

(d) At ambient conditions, natural gas must have a distinctive odor detectable down to a concentration in air not more than one-fifth the lower flammable limit.

[73 FR 37342, June 30, 2008]

§ 1065.720 Liquefied petroleum gas.

(a) Except as specified in paragraph (b) of this section, liquefied petroleum gas for testing must meet the specifications in the following table:

TABLE 1 OF § 1065.720—TEST FUEL SPECIFICATIONS FOR LIQUEFIED PETROLEUM GAS

Item	Value	Reference procedure [1]
Propane, C_3H_8	Minimum, 0.85 m^3/m^3	ASTM D2163–05.
Vapor pressure at 38 °C	Maximum, 1400 kPa	ASTM D1267–02 or 2598–02[2].
Volatility residue (evaporated temperature, 35 °C)	Maximum, −38 °C	ASTM D1837–02a.
Butanes	Maximum, 0.05 m^3/m^3	ASTM D2163–05.
Butenes	Maximum, 0.02 m^3/m^3	ASTM D2163–05.
Pentenes and heavier	Maximum, 0.005 m^3/m^3	ASTM D2163–05.
Propene	Maximum, 0.1 m^3/m^3	ASTM D2163–05.
Residual matter (residue on evap. of 100 ml oil stain observ.)	Maximum, 0.05 ml pass[3]	ASTM D2158–05.
Corrosion, copper strip	Maximum, No. 1	ASTM D1838–07.
Sulfur	Maximum, 80 mg/kg	ASTM D2784–06.
Moisture content	pass	ASTM D2713–91.

[1] ASTM procedures are incorporated by reference in § 1065.1010. See § 1065.701(d) for other allowed procedures.
[2] If these two test methods yield different results, use the results from ASTM D1267–02.
[3] The test fuel must not yield a persistent oil ring when you add 0.3 ml of solvent residue mixture to a filter paper in 0.1 ml increments and examine it in daylight after two minutes.

(b) In certain cases you may use test fuel not meeting the specifications in paragraph (a) of this section, as follows:

(1) You may use fuel that your in-use engines normally use, such as commercial-quality liquefied petroleum gas.

(2) You may use fuel meeting alternate specifications if the standard-setting part allows it.

(3) You may ask for approval to use fuel that does not meet the specifications in paragraph (a) of this section, but only if using the fuel would not adversely affect your ability to demonstrate compliance with the applicable standards.

(c) When we conduct testing using liquefied petroleum gas, we will use fuel that meets the specifications in paragraph (a) of this section.

(d) At ambient conditions, liquefied petroleum gas must have a distinctive odor detectable down to a concentration in air not more than one-fifth the lower flammable limit.

[73 FR 37342, June 30, 2008]

§ 1065.740 Lubricants.

(a) Use commercially available lubricating oil that represents the oil that will be used in your engine in use.

(b) You may use lubrication additives, up to the levels that the additive manufacturer recommends.

§ 1065.745 Coolants.

(a) You may use commercially available antifreeze mixtures or other coolants that will be used in your engine in use.

(b) For laboratory testing of liquid-cooled engines, you may use water with or without rust inhibitors.

(c) For coolants allowed in paragraphs (a) and (b) of this section, you may use rust inhibitors and additives required for lubricity, up to the levels that the additive manufacturer recommends.

§ 1065.750 Analytical gases.

Analytical gases must meet the accuracy and purity specifications of this section, unless you can show that other specifications would not affect your

ability to show that your engines comply with all applicable emission standards.

(a) Subparts C, D, F, and J of this part refer to the following gas specifications:

(1) Use purified gases to zero measurement instruments and to blend with calibration gases. Use gases with contamination no higher than the highest of the following values in the gas cylinder or at the outlet of a zero-gas generator:

(i) 2% contamination, measured relative to the flow-weighted mean concentration expected at the standard. For example, if you would expect a flow-weighted CO concentration of 100.0 μmol/mol, then you would be allowed to use a zero gas with CO contamination less than or equal to 2.000 μmol/mol.

(ii) Contamination as specified in the following table:

TABLE 1 OF § 1065.750—GENERAL SPECIFICATIONS FOR PURIFIED GASES.

Constituent	Purified synthetic air [1]	Purified N_2 [1]
THC (C_1 equivalent)	≤ 0.05 μmol/mol	≤ 0.05 μmol/mol.
CO	≤ 1 μmol/mol	≤ 1 μmol/mol.
CO_2	≤ 10 μmol/mol	≤ 10 μmol/mol.
O_2	0.205 to 0.215 mol/mol	≤ 2 μmol/mol.
NO_X	≤ 0.02 μmol/mol	≤ 0.02 μmol/mol.
N_2O [2]	≤ 0.05 μmol/mol	≤ 0.05 μmol/mol.

[1] We do not require these levels of purity to be NIST-traceable.
[2] The N_2O limit applies only if the standard-setting part requires you to report N_2O.

(2) Use the following gases with a FID analyzer:

(i) *FID fuel*. Use FID fuel with a stated H_2 concentration of (0.39 to 0.41) mol/mol, balance He, and a stated total hydrocarbon concentration of 0.05 μmol/mol or less.

(ii) *FID burner air*. Use FID burner air that meets the specifications of purified air in paragraph (a)(1) of this section. For field testing, you may use ambient air.

(iii) *FID zero gas*. Zero flame-ionization detectors with purified gas that meets the specifications in paragraph (a)(1) of this section, except that the purified gas O_2 concentration may be any value. Note that FID zero balance gases may be any combination of purified air and purified nitrogen. We recommend FID analyzer zero gases that contain approximately the expected flow-weighted mean concentration of O_2 in the exhaust sample during testing.

(iv) *FID propane span gas*. Span and calibrate THC FID with span concentrations of propane, C_3H_8. Calibrate on a carbon number basis of one (C_1). For example, if you use a C_3H_8 span gas of concentration 200 μmol/mol, span a FID to respond with a value of 600 μmol/mol. Note that FID span balance gases may be any combination of purified air and purified nitrogen. We recommend FID analyzer span gases that contain approximately the flow-weighted mean concentration of O_2 expected during testing. If the expected O_2 concentration in the exhaust sample is zero, we recommend using a balance gas of purified nitrogen.

(v) *FID methane span gas*. If you always span and calibrate a CH_4 FID with a nonmethane cutter, then span and calibrate the FID with span concentrations of methane, CH_4. Calibrate on a carbon number basis of one (C_1). For example, if you use a CH_4 span gas of concentration 200 μmol/mol, span a FID to respond with a value of 200 μmol/mol. Note that FID span balance gases may be any combination of purified air and purified nitrogen. We recommend FID analyzer span gases that contain approximately the expected flow-weighted mean concentration of O_2 in the exhaust sample during testing. If the expected O_2 concentration in the exhaust sample is zero, we recommend using a balance gas of purified nitrogen.

(3) Use the following gas mixtures, with gases traceable within ± 1.0% of the NIST-accepted value or other gas standards we approve:

(i) CH_4, balance purified synthetic air and/or N_2 (as applicable).

(ii) C_2H_6, balance purified synthetic air and/or N_2 (as applicable).

(iii) C_3H_8, balance purified synthetic air and/or N_2 (as applicable).

(iv) CO, balance purified N_2.

(v) CO_2, balance purified N_2.

(vi) NO, balance purified N_2.

(vii) NO_2, balance purified synthetic air.

(viii) O_2, balance purified N_2.

(ix) C_3H_8, CO, CO_2, NO, balance purified N_2.

(x) C_3H_8, CH_4, CO, CO_2, NO, balance purified N_2.

(xi) N_2O, balance purified synthetic air and/or N_2 (as applicable).

(4) You may use gases for species other than those listed in paragraph (a)(3) of this section (such as methanol in air, which you may use to determine response factors), as long as they are traceable to within ± 3.0% of the NIST-accepted value or other similar standards we approve, and meet the stability requirements of paragraph (b) of this section.

(5) You may generate your own calibration gases using a precision blending device, such as a gas divider, to dilute gases with purified N_2 or purified synthetic air. If your gas dividers meet the specifications in §1065.248, and the gases being blended meet the requirements of paragraphs (a)(1) and (3) of this section, the resulting blends are considered to meet the requirements of this paragraph (a).

(b) Record the concentration of any calibration gas standard and its expiration date specified by the gas supplier.

(1) Do not use any calibration gas standard after its expiration date, except as allowed by paragraph (b)(2) of this section.

(2) Calibration gases may be relabeled and used after their expiration date as follows:

(i) Alcohol/carbonyl calibration gases used to determine response factors according to subpart I of this part may be relabeled as specified in subpart I of this part.

(ii) Other gases may be relabeled and used after the expiration date only if we approve it in advance.

(c) Transfer gases from their source to analyzers using components that are dedicated to controlling and transferring only those gases. For example, do not use a regulator, valve, or transfer line for zero gas if those components were previously used to transfer a different gas mixture. We recommend that you label regulators, valves, and transfer lines to prevent contamination. Note that even small traces of a gas mixture in the dead volume of a regulator, valve, or transfer line can diffuse upstream into a high-pressure volume of gas, which would contaminate the entire high-pressure gas source, such as a compressed-gas cylinder.

(d) To maintain stability and purity of gas standards, use good engineering judgment and follow the gas standard supplier's recommendations for storing and handling zero, span, and calibration gases. For example, it may be necessary to store bottles of condensable gases in a heated environment.

[70 FR 40516, July 13, 2005, as amended at 73 FR 37343, June 30, 2008; 74 FR 56518, Oct. 30, 2009; 75 FR 68465, Nov. 8, 2010]

§1065.790 Mass standards.

(a) *PM balance calibration weights.* Use PM balance calibration weights that are certified as NIST-traceable within 0.1 % uncertainty. Calibration weights may be certified by any calibration lab that maintains NIST-traceability. Make sure your lowest calibration weight has no greater than ten times the mass of an unused PM-sample medium.

(b) *Dynamometer calibration weights.* [Reserved]

Subpart I—Testing With Oxygenated Fuels

§1065.801 Applicability.

(a) This subpart applies for testing with oxygenated fuels. Unless the standard-setting part specifies otherwise, the requirements of this subpart do not apply for fuels that contain less than 25% oxygenated compounds by volume. For example, you generally do not need to follow the requirements of this subpart for tests performed using a fuel containing 10% ethanol and 90% gasoline, but you must follow these requirements for tests performed using a fuel containing 85% ethanol and 15% gasoline.

(b) Section 1065.805 applies for all other testing that requires measurement of any alcohols or carbonyls.

(c) This subpart specifies sampling procedures and calculations that are different than those used for non-oxygenated fuels. All other test procedures of this part 1065 apply for testing with oxygenated fuels.

§ 1065.805 Sampling system.

(a) Dilute engine exhaust, and use batch sampling to collect proportional flow-weighted dilute samples of the applicable alcohols and carbonyls. You may not use raw sampling for alcohols and carbonyls.

(b) You may collect background samples for correcting dilution air for background concentrations of alcohols and carbonyls.

(c) Maintain sample temperatures within the dilution tunnel, probes, and sample lines high enough to prevent aqueous condensation up to the point where a sample is collected to prevent loss of the alcohols and carbonyls by dissolution in condensed water. Use good engineering judgment to ensure that surface reactions of alcohols and carbonyls do not occur, as surface decomposition of methanol has been shown to occur at temperatures greater than 120 °C in exhaust from methanol-fueled engines.

(d) You may bubble a sample of the exhaust through water to collect alcohols for later analysis. You may also use a photo-acoustic analyzer to quantify ethanol and methanol in an exhaust sample.

(e) Sample the exhaust through cartridges impregnated with 2,4-dinitrophenylhydrazine to collect carbonyls for later analysis. If the standard-setting part specifies a duty cycle that has multiple test intervals (such as multiple engine starts or an engine-off soak phase), you may proportionally collect a single carbonyl sample for the entire duty cycle. For example, if the standard-setting part specifies a six-to-one weighting of hot-start to cold-start emissions, you may collect a single carbonyl sample for the entire duty cycle by using a hot-start sample flow rate that is six times the cold-start sample flow rate.

(f) You may sample alcohols or carbonyls using ''California Non-Methane Organic Gas Test Procedures'' (incorporated by reference in § 1065.1010). If you use this method, follow its calculations to determine the mass of the alcohol/carbonyl in the exhaust sample, but follow subpart G of this part for all other calculations.

(g) Use good engineering judgment to sample other oxygenated hydrocarbon compounds in the exhaust.

[70 FR 40516, July 13, 2005, as amended at 73 FR 37343, June 30, 2008]

§ 1065.845 Response factor determination.

Since FID analyzers generally have an incomplete response to alcohols and carbonyls, determine each FID analyzer's alcohol/carbonyl response factor (such as RF_{MeOH}) after FID optimization to subtract those responses from the FID reading. You are not required to determine the response factor for a compound unless you will subtract its response to compensate for a response. Formaldehyde response is assumed to be zero and does not need to be determined. Use the most recent alcohol/carbonyl response factors to compensate for alcohol/carbonyl response.

(a) Determine the alcohol/carbonyl response factors as follows:

(1) Select a C_3H_8 span gas that meets the specifications of § 1065.750. Note that FID zero and span balance gases may be any combination of purified air or purified nitrogen that meets the specifications of § 1065.750. We recommend FID analyzer zero and span gases that contain approximately the flow-weighted mean concentration of O_2 expected during testing. Record the C_3H_8 concentration of the gas.

(2) Select or prepare an alcohol/carbonyl calibration gas that meets the specifications of § 1065.750 and has a concentration typical of the peak concentration expected at the hydrocarbon standard. Record the calibration concentration of the gas.

(3) Start and operate the FID analyzer according to the manufacturer's instructions.

(4) Confirm that the FID analyzer has been calibrated using C_3H_8. Calibrate on a carbon number basis of one (C_1). For example, if you use a C_3H_8 span gas

of concentration 200 μmol/mol, span the FID to respond with a value of 600 μmol/mol.

(5) Zero the FID. Note that FID zero and span balance gases may be any combination of purified air or purified nitrogen that meets the specifications of §1065.750. We recommend FID analyzer zero and span gases that contain approximately the flow-weighted mean concentration of O_2 expected during testing.

(6) Span the FID with the C_3H_8 span gas that you selected under paragraph (a)(1) of this section.

(7) Introduce at the inlet of the FID analyzer the alcohol/carbonyl calibration gas that you selected under paragraph (a)(2) of this section.

(8) Allow time for the analyzer response to stabilize. Stabilization time may include time to purge the analyzer and to account for its response.

(9) While the analyzer measures the alcohol/carbonyl concentration, record 30 seconds of sampled data. Calculate the arithmetic mean of these values.

(10) Divide the mean measured concentration by the recorded span concentration of the alcohol/carbonyl calibration gas. The result is the FID analyzer's response factor for alcohol/carbonyl, RF_{MeOH}.

(b) Alcohol/carbonyl calibration gases must remain within ±2% of the labeled concentration. You must demonstrate the stability based on a quarterly measurement procedure with a precision of ±2% percent or another method that we approve. Your measurement procedure may incorporate multiple measurements. If the true concentration of the gas changes deviates by more than ±2%, but less than ±10%, the gas may be relabeled with the new concentration.

[70 FR 40516, July 13, 2005, as amended at 73 FR 37343, June 30, 2008; 75 FR 23058, Apr. 30, 2010]

§ 1065.850 Calculations.

Use the calculations specified in §1065.665 to determine THCE or NMHCE.

Subpart J—Field Testing and Portable Emission Measurement Systems

§ 1065.901 Applicability.

(a) *Field testing.* This subpart specifies procedures for field-testing engines to determine brake-specific emissions using portable emission measurement systems (PEMS). These procedures are designed primarily for in-field measurements of engines that remain installed in vehicles or equipment in the field. Field-test procedures apply to your engines only as specified in the standard-setting part.

(b) *Laboratory testing.* You may use PEMS for any testing in a laboratory or similar environment without restriction or prior approval if the PEMS meets all applicable specifications for laboratory testing. You may also use PEMS for any testing in a laboratory or similar environment if we approve it in advance, subject to the following provisions:

(1) Follow the laboratory test procedures specified in this part 1065, according to §1065.905(e).

(2) Do not apply any PEMS-related field-testing adjustments or measurement allowances to laboratory emission results or standards.

(3) Do not use PEMS for laboratory measurements if it prevents you from demonstrating compliance with the applicable standards. Some of the PEMS requirements in this part 1065 are less stringent than the corresponding laboratory requirements. Depending on actual PEMS performance, you might therefore need to account for some additional measurement uncertainty when using PEMS for laboratory testing. If we ask, you must show us by engineering analysis that any additional measurement uncertainty due to your use of PEMS for laboratory testing is offset by the extent to which your engine's emissions are below the applicable standards. For example, you might show that PEMS versus laboratory uncertainty represents 5% of the standard, but your engine's deteriorated emissions are at least 20% below the standard for each pollutant.

[70 FR 40516, July 13, 2005, as amended at 73 FR 37344, June 30, 2008]

§ 1065.905 General provisions.

(a) *General*. Unless the standard-setting part specifies deviations from the provisions of this subpart, field testing and laboratory testing with PEMS must conform to the provisions of this subpart.

(b) *Field-testing scope*. Field testing conducted under this subpart may include any normal in-use operation of an engine.

(c) *Field testing and the standard-setting part*. This subpart J specifies procedures for field-testing various categories of engines. See the standard-setting part for specific provisions for a particular type of engine. Before using this subpart's procedures for field testing, read the standard-setting part to answer at least the following questions:

(1) How many engines must I test in the field?

(2) How many times must I repeat a field test on an individual engine?

(3) How do I select vehicles for field testing?

(4) What maintenance steps may I take before or between tests?

(5) What data are needed for a single field test on an individual engine?

(6) What are the limits on ambient conditions for field testing? Note that the ambient condition limits in § 1065.520 do not apply for field testing. Field testing may occur at any ambient temperature, pressure, and humidity unless otherwise specified in the standard-setting part.

(7) Which exhaust constituents do I need to measure?

(8) How do I account for crankcase emissions?

(9) Which engine and ambient parameters do I need to measure?

(10) How do I process the data recorded during field testing to determine if my engine meets field-testing standards? How do I determine individual test intervals? Note that ''test interval'' is defined in subpart K of this part 1065.

(11) Should I warm up the test engine before measuring emissions, or do I need to measure cold-start emissions during a warm-up segment of in-use operation?

(12) Do any unique specifications apply for test fuels?

(13) Do any special conditions invalidate parts of a field test or all of a field test?

(14) Does any special measurement allowance apply to field-test emission results or standards, based on using PEMS for field-testing versus using laboratory equipment and instruments for laboratory testing?

(15) Do results of initial field testing trigger any requirement for additional field testing or laboratory testing?

(16) How do I report field-testing results?

(d) *Field testing and this part 1065*. Use the following specifications for field testing:

(1) Use the applicability and general provisions of subpart A of this part.

(2) Use equipment specifications in § 1065.101 and in the sections from § 1065.140 to the end of subpart B of this part, with the exception of §§ 1065.140(e)(1) and (4), 1065.170(c)(1)(vi), and 1065.195(c). Section 1065.910 identifies additional equipment that is specific to field testing.

(i) For PM samples, configure dilution systems as follows:

(A) Use good engineering judgment to control diluent (i.e., dilution air) temperature. If you choose to directly and actively control diluent temperature, set the temperature to 25 °C.

(B) Control sample temperature to a (32 to 62) °C tolerance, as measured anywhere within 20 cm upstream or downstream of the PM storage media (such as a filter or oscillating crystal), where the tolerance applies only during sampling.

(C) Maintain filter face velocity to a (5 to 100) cm/s tolerance for flow-through media. Compliance with this provision can be verified by engineering analysis. This provision does not apply for non-flow-through media.

(ii) For inertial PM balances, there is no requirement to control the stabilization environment temperature or dewpoint.

(3) Use measurement instruments in subpart C of this part, except as specified in § 1065.915.

(4) Use calibrations and verifications in subpart D of this part, except as specified in § 1065.920. Section 1065.920 also specifies additional calibrations and verifications for field testing.

(5) Use the provisions of the standard-setting part for selecting and maintaining engines in the field instead of the specifications in subpart E of this part.

(6) Use the procedures in §§ 1065.930 and 1065.935 to start and run a field test. If you use a gravimetric balance for PM, weigh PM samples according to §§ 1065.590 and 1065.595.

(7) Use the calculations in subpart G of this part to calculate emissions over each test interval. Note that ''test interval'' is defined in subpart K of this part 1065, and that the standard setting part indicates how to determine test intervals for your engine.

Section 1065.940 specifies additional calculations for field testing. Use any calculations specified in the standard-setting part to determine if your engines meet the field-testing standards. The standard-setting part may also contain additional calculations that determine when further field testing is required.

(8) Use a typical in-use fuel meeting the specifications of § 1065.701(d).

(9) Use the lubricant and coolant specifications in §§ 1065.740 and 1065.745.

(10) Use the analytical gases and other calibration standards in §§ 1065.750 and 1065.790.

(11) If you are testing with oxygenated fuels, use the procedures specified for testing with oxygenated fuels in subpart I of this part.

(12) Apply the definitions and reference materials in subpart K of this part.

(e) *Laboratory testing using PEMS.* You may use PEMS for testing in a laboratory as described in § 1065.901(b). Use the following procedures and specifications when using PEMS for laboratory testing:

(1) Use the applicability and general provisions of subpart A of this part.

(2) Use equipment specifications in subpart B of this part. Section 1065.910 specifies additional equipment specific to testing with PEMS.

(3) Use measurement instruments in subpart C of this part, except as specified in § 1065.915.

(4) Use calibrations and verifications in subpart D of this part, except as specified in § 1065.920. Section 1065.920 also specifies additional calibration and verifications for PEMS.

(5) Use the provisions of § 1065.401 for selecting engines for testing. Use the provisions of subpart E of this part for maintaining engines, except as specified in the standard-setting part.

(6) Use the procedures in subpart F of this part and in the standard-setting part to start and run a laboratory test.

(7) Use the calculations in subpart G of this part to calculate emissions over the applicable duty cycle. Section 1065.940 specifies additional calculations for testing with PEMS.

(8) Use a fuel meeting the specifications of subpart H of this part, as specified in the standard-setting part.

(9) Use the lubricant and coolant specifications in §§ 1065.740 and 1065.745.

(10) Use the analytical gases and other calibration standards in §§ 1065.750 and 1065.790.

(11) If you are testing with oxygenated fuels, use the procedures specified for testing with oxygenated fuels in subpart I of this part.

(12) Apply the definitions and reference materials in subpart K of this part.

(f) *Summary.* The following table summarizes the requirements of paragraphs (d) and (e) of this section:

TABLE 1 OF § 1065.905—SUMMARY OF TESTING REQUIREMENTS SPECIFIED OUTSIDE OF THIS SUBPART J

Subpart	Applicability for field testing [1]	Applicability for laboratory or similar testing with PEMS without restriction [1]	Applicability for laboratory or similar testing with PEMS with estrictions [1]
A: Applicability and general provisions.	Use all	Use all	Use all.
B: Equipment for testing	Use § 1065.101 and § 1065.140 through the end of subpart B, except § 1065.140(e)(1) and (4), § 1065.170(c)(1)(vi), and § 1065.195(c). § 1065.910 specifies equipment specific to field testing.	Use all	Use all. § 1065.910 specifies equipment specific to laboratory testing with PEMS.

TABLE 1 OF § 1065.905—SUMMARY OF TESTING REQUIREMENTS SPECIFIED OUTSIDE OF THIS SUBPART J—Continued

Subpart	Applicability for field testing [1]	Applicability for laboratory or similar testing with PEMS without restriction [1]	Applicability for laboratory or similar testing with PEMS with estrictions [1]
C: Measurement instruments.	Use all. § 1065.915 allows deviations	Use all except § 1065.295(c).	Use all except § 1065.295(c). § 1065.915 allows deviations.
D: Calibrations and verifications.	Use all except § 1065.308 and § 1065.309. § 1065.920 allows deviations, but also has additional specifications.	Use all	Use all. § 1065.920 allows deviations, but also has additional specifications.
E: Test engine selection, maintenance, and durability.	Do not use. Use standard-setting part	Use all	Use all.
F: Running an emission test in the laboratory.	Use §§ 1065.590 and 1065.595 for PM § 1065.930 and § 1065.935 to start and run a field test.	Use all	Use all.
G: Calculations and data requirements.	Use all. § 1065.940 has additional calculation instructions.	Use all	Use all. § 1065.940 has additional calculation instructions.
H: Fuels, engine fluids, analytical gases, and other calibration materials.	Use all	Use all	Use all.
I: Testing with oxygenated fuels.	Use all	Use all	Use all.
K: Definitions and reference materials.	Use all	Use all	Use all.

[1] Refer to paragraphs (d) and (e) of this section for complete specifications.

[70 FR 40516, July 13, 2005, as amended at 73 FR 37344, June 30, 2008; 75 FR 68465, Nov. 8, 2010]

§ 1065.910 PEMS auxiliary equipment for field testing.

For field testing you may use various types of auxiliary equipment to attach PEMS to a vehicle or engine and to power PEMS.

(a) When you use PEMS, you may route engine intake air or exhaust through a flow meter. Route the engine intake air or exhaust as follows:

(1) *Flexible connections.* Use short flexible connectors where necessary.

(i) You may use flexible connectors to enlarge or reduce the pipe diameters to match that of your test equipment.

(ii) We recommend that you use flexible connectors that do not exceed a length of three times their largest inside diameter.

(iii) We recommend that you use four-ply silicone-fiberglass fabric with a temperature rating of at least 315 °C for flexible connectors. You may use connectors with a spring-steel wire helix for support and you may use Nomex™ coverings or linings for durability. You may also use any other nonreactive material with equivalent permeation-resistance and durability, as long as it seals tightly.

(iv) Use stainless-steel hose clamps to seal flexible connectors, or use clamps that seal equivalently.

(v) You may use additional flexible connectors to connect to flow meters.

(2) *Tubing.* Use rigid 300 series stainless steel tubing to connect between flexible connectors. Tubing may be straight or bent to accommodate vehicle geometry. You may use ''T'' or ''Y'' fittings made of 300 series stainless steel tubing to join multiple connections, or you may cap or plug redundant flow paths if the engine manufacturer recommends it.

(3) *Flow restriction.* Use flow meters, connectors, and tubing that do not increase flow restriction so much that it exceeds the manufacturer's maximum specified value. You may verify this at the maximum exhaust flow rate by measuring pressure at the manufacturer-specified location with your system connected. You may also perform

an engineering analysis to verify an acceptable configuration, taking into account the maximum exhaust flow rate expected, the field test system's flexible connectors, and the tubing's characteristics for pressure drops versus flow.

(b) For vehicles or other motive equipment, we recommend installing PEMS in the same location where a passenger might sit. Follow PEMS manufacturer instructions for installing PEMS in cargo spaces, engine spaces, or externally such that PEMS is directly exposed to the outside environment. We recommend locating PEMS where it will be subject to minimal sources of the following parameters:

(1) Ambient temperature changes.

(2) Ambient pressure changes.

(3) Electromagnetic radiation.

(4) Mechanical shock and vibration.

(5) Ambient hydrocarbons—if using a FID analyzer that uses ambient air as FID burner air.

(c) Use mounting hardware as required for securing flexible connectors, ambient sensors, and other equipment. Use structurally sound mounting points such as vehicle frames, trailer hitch receivers, walk spaces, and payload tie-down fittings. We recommend mounting hardware such as clamps, suction cups, and magnets that are specifically designed for your application. We also recommend considering mounting hardware such as commercially available bicycle racks, trailer hitches, and luggage racks where applicable.

(d) Field testing may require portable electrical power to run your test equipment. Power your equipment, as follows:

(1) You may use electrical power from the vehicle, equipment, or vessel, up to the highest power level, such that all the following are true:

(i) The power system is capable of safely supplying power, such that the power demand for testing does not overload the power system.

(ii) The engine emissions do not change significantly as a result of the power demand for testing.

(iii) The power demand for testing does not increase output from the engine by more than 1% of its maximum power.

(2) You may install your own portable power supply. For example, you may use batteries, fuel cells, a portable generator, or any other power supply to supplement or replace your use of vehicle power. You may connect an external power source directly to the vehicle's, vessel's, or equipment's power system; however, during a test interval (such as an NTE event) you must not supply power to the vehicle's power system in excess of 1% of the engine's maximum power.

[73 FR 37344, June 30, 2008, as amended at 75 FR 23058, Apr. 30, 2010]

§ 1065.915 PEMS instruments.

(a) *Instrument specifications.* We recommend that you use PEMS that meet the specifications of subpart C of this part. For unrestricted use of PEMS in a laboratory or similar environment, use a PEMS that meets the same specifications as each lab instrument it replaces. For field testing or for testing with PEMS in a laboratory or similar environment, under the provisions of § 1065.905(b), the specifications in the following table apply instead of the specifications in Table 1 of § 1065.205:

TABLE 1 OF § 1065.915—RECOMMENDED MINIMUM PEMS MEASUREMENT INSTRUMENT PERFORMANCE

Measurement	Measured quantity symbol	Rise time, t_{10-90}, and Fall time, t_{90-10}	Recording update frequency	Accuracy [1]	Repeatability [1]	Noise [1]
Engine speed transducer.	f_n	1 s	1 Hz means	5.0% of pt. or 1.0% of max.	2.0% of pt. or 1.0% of max.	0.5% of max.
Engine torque estimator, BSFC (This is a signal from an engine's ECM).	*T* or BSFC	1 s	1 Hz means	8.0% of pt. or 5% of max.	2.0% of pt. or 1.0% of max.	1.0% of max.

TABLE 1 OF § 1065.915—RECOMMENDED MINIMUM PEMS MEASUREMENT INSTRUMENT PERFORMANCE—Continued

Measurement	Measured quantity symbol	Rise time, t_{10-90}, and Fall time, t_{90-10}	Recording update frequency	Accuracy [1]	Repeatability [1]	Noise [1]
General pressure transducer (not a part of another instrument).	p	5 s	1 Hz	5.0% of pt. or 5.0% of max.	2.0% of pt. or 0.5% of max.	1.0% of max.
Atmospheric pressure meter.	p_{atmos}	50 s	0.1 Hz	250 Pa	200 Pa	100 Pa.
General temperature sensor (not a part of another instrument).	T	5 s	1 Hz	1.0% of pt. K or 5 K	0.5% of pt. K or 2 K.	0.5% of max 0.5 K.
General dewpoint sensor.	T_{dew}	50 s	0.1 Hz	3 K	1 K	1 K.
Exhaust flow meter	$\dot{n}$	1 s	1 Hz means	5.0% of pt. or 3.0% of max.	2.0% of pt	2.0% of max.
Dilution air, inlet air, exhaust, and sample flow meters.	$\dot{n}$	1 s	1 Hz means	2.5% of pt. or 1.5% of max.	1.25% of pt. or 0.75% of max.	1.0% of max.
Continuous gas analyzer.	x	5 s	1 Hz	4.0% of pt. or 4.0% of meas.	2.0% of pt. or 2.0% of meas.	1.0% of max.
Gravimetric PM balance.	m_{PM}	N/A	N/A	See § 1065.790	0.5 μg	N/A.
Inertial PM balance	m_{PM}	N/A	N/A	4.0% of pt. or 4.0% of meas.	2.0% of pt. or 2.0% of meas.	1.0% of max.

[1] Accuracy, repeatability, and noise are all determined with the same collected data, as described in § 1065.305, and based on absolute values. "pt." refers to the overall flow-weighted mean value expected at the standard; "max." refers to the peak value expected at the standard over any test interval, not the maximum of the instrument's range; "meas" refers to the actual flow-weighted mean measured over any test interval.

(b) *Redundant measurements.* For all PEMS described in this subpart, you may use data from multiple instruments to calculate test results for a single test. If you use redundant systems, use good engineering judgment to use multiple measured values in calculations or to disregard individual measurements. Note that you must keep your results from all measurements, as described in § 1065.25. This requirement applies whether or not you actually use the measurements in your calculations.

(c) *Field-testing ambient effects on PEMS.* We recommend that you use PEMS that are only minimally affected by ambient conditions such as temperature, pressure, humidity, physical orientation, mechanical shock and vibration, electromagnetic radiation, and ambient hydrocarbons. Follow the PEMS manufacturer's instructions for proper installation to isolate PEMS from ambient conditions that affect their performance. If a PEMS is inherently affected by ambient conditions that you cannot control, you may monitor those conditions and adjust the PEMS signals to compensate for the ambient effect. The standard-setting part may also specify the use of one or more field-testing adjustments or measurement allowances that you apply to results or standards to account for ambient effects on PEMS.

(d) *ECM signals.* You may use signals from the engine's electronic control module (ECM) in place of values measured by individual instruments within a PEMS, subject to the following provisions:

(1) *Recording ECM signals.* If your ECM updates a broadcast signal more or less frequently than 1 Hz, process data as follows:

(i) If your ECM updates a broadcast signal more frequently than 1 Hz, use PEMS to sample and record the signal's value more frequently. Calculate and record the 1 Hz mean of the more frequently updated data.

(ii) If your ECM updates a broadcast signal less frequently than 1 Hz, use PEMS to sample and record the signal's value at the most frequent rate. Linearly interpolate between recorded

values and record the interpolated values at 1 Hz.

(iii) Optionally, you may use PEMS to electronically filter the ECM signals to meet the rise time and fall time specifications in Table 1 of this section. Record the filtered signal at 1 Hz.

(2) *Omitting ECM signals*. Replace any discontinuous or irrational ECM data with linearly interpolated values from adjacent data.

(3) *Aligning ECM signals with other data*. You must perform time-alignment and dispersion of ECM signals, according to PEMS manufacturer instructions and using good engineering judgment.

(4) *ECM signals for determining test intervals*. You may use any combination of ECM signals, with or without other measurements, to determine the start-time and end-time of a test interval.

(5) *ECM signals for determining brake-specific emissions*. You may use any combination of ECM signals, with or without other measurements, to estimate engine speed, torque, brake-specific fuel consumption (BSFC, in units of mass of fuel per kW-hr), and fuel rate for use in brake-specific emission calculations. We recommend that the overall performance of any speed, torque, or BSFC estimator should meet the performance specifications in Table 1 of this section. We recommend using one of the following methods:

(i) *Speed*. Use the engine speed signal directly from the ECM. This signal is generally accurate and precise. You may develop your own speed algorithm based on other ECM signals.

(ii) *Torque*. Use one of the following:

(A) *ECM torque*. Use the engine-torque signal directly from the ECM, if broadcast. Determine if this signal is proportional to indicated torque or brake torque. If it is proportional to indicated torque, subtract friction torque from indicated torque and record the result as brake torque. Friction torque may be a separate signal broadcast from the ECM or you may have to determine it from laboratory data as a function of engine speed.

(B) *ECM %-load*. Use the %-load signal directly from the ECM, if broadcast. Determine if this signal is proportional to indicated torque or brake torque. If it is proportional to indicated torque, subtract the minimum %-load value from the %-load signal. Multiply this result by the maximum brake torque at the corresponding engine speed. Maximum brake torque versus speed information is commonly published by the engine manufacturer.

(C) *Your algorithms*. You may develop and use your own combination of ECM signals to determine torque.

(iii) *BSFC*. Use one of the following:

(A) Use ECM engine speed and ECM fuel flow signals to interpolate brake-specific fuel consumption data, which might be available from an engine laboratory as a function of ECM engine speed and ECM fuel signals.

(B) Use a single BSFC value that approximates the BSFC value over a test interval (as defined in subpart K of this part). This value may be a nominal BSFC value for all engine operation determined over one or more laboratory duty cycles, or it may be any other BSFC that you determine. If you use a nominal BSFC, we recommend that you select a value based on the BSFC measured over laboratory duty cycles that best represent the range of engine operation that defines a test interval for field-testing. You may use the methods of this paragraph (d)(5)(iii)(B) only if it does not adversely affect your ability to demonstrate compliance with applicable standards.

(C) You may develop and use your own combination of ECM signals to determine BSFC.

(iv) *ECM fuel rate*. Use the fuel rate signal directly from the ECM and chemical balance to determine the molar flow rate of exhaust. Use §1065.655(d) to determine the carbon mass fraction of fuel. You may alternatively develop and use your own combination of ECM signals to determine fuel mass flow rate.

(v) *Other ECM signals*. You may ask to use other ECM signals for determining brake-specific emissions, such as ECM air flow. We must approve the use of such signals in advance.

(6) *Permissible deviations*. ECM signals may deviate from the specifications of this part 1065, but the expected deviation must not prevent you from demonstrating that you meet the applicable standards. For example, your emission results may be sufficiently below

an applicable standard, such that the deviation would not significantly change the result. As another example, a very low engine-coolant temperature may define a logical statement that determines when a test interval may start. In this case, even if the ECM's sensor for detecting coolant temperature was not very accurate or repeatable, its output would never deviate so far as to significantly affect when a test interval may start.

[70 FR 40516, July 13, 2005, as amended at 73 FR 37344, June 30, 2008; 73 FR 59342, Oct. 8, 2008; 75 FR 68466, Nov. 8, 2010]

§ 1065.920 PEMS calibrations and verifications.

(a) *Subsystem calibrations and verifications*. Use all the applicable calibrations and verifications in subpart D of this part, including the linearity verifications in § 1065.307, to calibrate and verify PEMS. Note that a PEMS does not have to meet the system-response and updating-recording verifications of §§ 1065.308 and 1065.309 if it meets the overall verification described in paragraph (b) of this section. This section does not apply to ECM signals.

(b) *Overall verification*. We require only that you maintain a record showing that the particular make, model, and configuration of your PEMS meets this verification. We recommend that you generate your own record to show that your specific PEMS meets this verification, but you may also rely on data and other information from the PEMS manufacturer. If you upgrade or change the configuration of your PEMS, your record must show that your new configuration meets this verification. The verification consists of operating an engine over a duty cycle in the laboratory and statistically comparing data generated and recorded by the PEMS with data simultaneously generated and recorded by laboratory equipment as follows:

(1) Mount an engine on a dynamometer for laboratory testing. Prepare the laboratory and PEMS for emission testing, as described in this part, to get simultaneous measurements. We recommend selecting an engine with emission levels close to the applicable duty-cycle standards, if possible.

(2) Select or create a duty cycle that has all the following characteristics:

(i) Engine operation that represents normal in-use speeds, loads, and degree of transient activity. Consider using data from previous field tests to generate a cycle.

(ii) A duration of (20 to 40) min.

(iii) At least 50% of engine operating time must include at least 10 valid test intervals for calculating emission levels for field testing. For example, for highway compression-ignition engines, select a duty cycle in which at least 50% of the engine operating time can be used to calculate valid NTE events.

(3) Starting with a warmed-up engine, run a valid emission test with the duty cycle from paragraph (b)(2) of this section. The laboratory and PEMS must both meet applicable validation requirements, such as drift validation, hydrocarbon contamination validation, and proportional validation.

(4) Determine the brake-specific emissions for each test interval for both laboratory and the PEMS measurements, as follows:

(i) For both laboratory and PEMS measurements, use identical values to determine the beginning and end of each test interval.

(ii) For both laboratory and PEMS measurements, use identical values to determine total work over each test interval.

(iii) If the standard-setting part specifies the use of a measurement allowance for field testing, also apply the measurement allowance during calibration using good engineering judgment. If the measurement allowance is normally added to the standard, this means you must subtract the measurement allowance from the measured PEMS brake-specific emission result.

(iv) Round results to the same number of significant digits as the standard.

(5) Repeat the engine duty cycle and calculations until you have at least 100 valid test intervals.

(6) For each test interval and emission, subtract the lab result from the PEMS result.

(7) The PEMS passes this verification if any one of the following are true for each constituent:

(i) 91% or more of the differences are zero or less than zero.

(ii) The entire set of test-interval results passes the 95% confidence alternate-procedure statistics for field testing (*t*-test and *F*-test) specified in subpart A of this part.

[70 FR 40516, July 13, 2005, as amended at 73 FR 37345, June 30, 2008; 75 FR 68467, Nov. 8, 2010]

§ 1065.925 PEMS preparation for field testing.

Take the following steps to prepare PEMS for field testing:

(a) Verify that ambient conditions at the start of the test are within the limits specified in the standard-setting part. Continue to monitor these values to determine if ambient conditions exceed the limits during the test.

(b) Install a PEMS and any accessories needed to conduct a field test.

(c) Power the PEMS and allow pressures, temperatures, and flows to stabilize to their operating set points.

(d) Bypass or purge any gaseous sampling PEMS instruments with ambient air until sampling begins to prevent system contamination from excessive cold-start emissions.

(e) Conduct calibrations and verifications.

(f) Operate any PEMS dilution systems at their expected flow rates using a bypass.

(g) If you use a gravimetric balance to determine whether an engine meets an applicable PM standard, follow the procedures for PM sample preconditioning and tare weighing as described in § 1065.590. Operate the PM-sampling system at its expected flow rates using a bypass.

(h) Verify the amount of contamination in the PEMS HC sampling system before the start of the field test as follows:

(1) Select the HC analyzers' ranges for measuring the maximum concentration expected at the HC standard.

(2) Zero the HC analyzers using a zero gas or ambient air introduced at the analyzer port. When zeroing the FIDs, use the FIDs' burner air that would be used for in-use measurements (generally either ambient air or a portable source of burner air).

(3) Span the HC analyzers using span gas introduced at the analyzer port. When spanning the FIDs, use the FIDs' burner air that would be used in-use (for example, use ambient air or a portable source of burner air).

(4) Overflow zero or ambient air at the HC probe inlet or into a tee near the probe outlet.

(5) Measure the HC concentration in the sampling system:

(i) For continuous sampling, record the mean HC concentration as overflow zero air flows.

(ii) For batch sampling, fill the sample medium and record its mean concentration.

(6) Record this value as the initial HC concentration, $x_{THCinit}$, and use it to correct measured values as described in § 1065.660.

(7) If the initial HC concentration exceeds the greater of the following values, determine the source of the contamination and take corrective action, such as purging the system or replacing contaminated portions:

(i) 2% of the flow-weighted mean concentration expected at the standard or measured during testing.

(ii) 2 μmol/mol.

(8) If corrective action does not resolve the deficiency, you may use a contaminated HC system if it does not prevent you from demonstrating compliance with the applicable emission standards.

[70 FR 40516, July 13, 2005, as amended at 73 FR 37345, June 30, 2008; 73 FR 59342, Oct. 8, 2008; 75 FR 68467, Nov. 8, 2010]

§ 1065.930 Engine starting, restarting, and shutdown.

Unless the standard-setting part specifies otherwise, start, restart, and shut down the test engine for field testing as follows:

(a) Start or restart the engine as described in the owners manual.

(b) If the engine does not start after 15 seconds of cranking, stop cranking and determine the reason it failed to start. However, you may crank the engine longer than 15 seconds, as long as the owners manual or the service-repair manual describes the longer cranking time as normal.

(c) Respond to engine stalling with the following steps:

(1) If the engine stalls during a required warm-up before emission sampling begins, restart the engine and continue warm-up.

(2) If the engine stalls at any other time after emission sampling begins, restart the engine and continue testing.

(d) Shut down and restart the engine according to the manufacturer's specifications, as needed during normal operation in-use, but continue emission sampling until the field test is complete.

§ 1065.935 Emission test sequence for field testing.

(a) Time the start of field testing as follows:

(1) If the standard-setting part requires only hot-stabilized emission measurements, operate the engine in-use until the engine coolant, block, or head absolute temperature is within ±10% of its mean value for the previous 2 min or until an engine thermostat controls engine temperature with coolant or air flow.

(2) If the standard-setting part requires hot-start emission measurements, shut down the engine after at least 2 min at the temperature tolerance specified in paragraph (a)(1) of this section. Start the field test within 20 min of engine shutdown.

(3) If the standard-setting part requires cold-start emission measurements, proceed to the steps specified in paragraph (b) of this section.

(b) Take the following steps before emission sampling begins:

(1) For batch sampling, connect clean storage media, such as evacuated bags or tare-weighed PM sample media.

(2) Operate the PEMS according to the instrument manufacturer's instructions and using good engineering judgment.

(3) Operate PEMS heaters, dilution systems, sample pumps, cooling fans, and the data-collection system.

(4) Pre-heat or pre-cool PEMS heat exchangers in the sampling system to within their tolerances for operating temperatures.

(5) Allow all other PEMS components such as sample lines, filters, and pumps to stabilize at operating temperature.

(6) Verify that no significant vacuum-side leak exists in the PEMS, as described in § 1065.345.

(7) Adjust PEMS flow rates to desired levels, using bypass flow if applicable.

(8) Zero and span all PEMS gas analyzers using NIST-traceable gases that meet the specifications of § 1065.750.

(c) Start testing as follows:

(1) Before the start of the first test interval, zero or re-zero any PEMS electronic integrating devices, as needed.

(2) If the engine is already running and warmed up and starting is not part of field testing, start the field test by simultaneously starting to sample exhaust, record engine and ambient data, and integrate measured values using a PEMS.

(3) If engine starting is part of field testing, start field testing by simultaneously starting to sample from the exhaust system, record engine and ambient data, and integrate measured values using a PEMS. Then start the engine.

(d) Continue the test as follows:

(1) Continue to sample exhaust, record data and integrate measured values throughout normal in-use operation of the engine.

(2) Between each test interval, zero or re-zero any electronic integrating devices, and reset batch storage media, as needed.

(3) The engine may be stopped and started, but continue to sample emissions throughout the entire field test.

(4) Conduct periodic verifications such as zero and span verifications on PEMS gas analyzers, as recommended by the PEMS manufacturer or as indicated by good engineering judgment. Results from these verifications will be used to calculate and correct for drift according to paragraph (g) of this section. Do not include data recorded during verifications in emission calculations.

(5) You may periodically condition and analyze batch samples in-situ, including PM samples; for example you may condition an inertial PM balance substrate if you use an inertial balance to measure PM.

(6) You may have personnel monitoring and adjusting the PEMS during

a test, or you may operate the PEMS unattended.

(e) Stop testing as follows:

(1) Continue sampling as needed to get an appropriate amount of emission measurement, according to the standard setting part. If the standard-setting part does not describe when to stop sampling, develop a written protocol before you start testing to establish how you will stop sampling. You may not determine when to stop testing based on emission results.

(2) At the end of the field test, allow the sampling systems' response times to elapse and then stop sampling. Stop any integrators and indicate the end of the test cycle on the data-collection medium.

(3) You may shut down the engine before or after you stop sampling.

(f) For any proportional batch sample, such as a bag sample or PM sample, verify for each test interval whether or not proportional sampling was maintained according to §1065.545. Void the sample for any test interval that did not maintain proportional sampling according to §1065.545.

(g) Take the following steps after emission sampling is complete:

(1) As soon as practical after the emission sampling, analyze any gaseous batch samples.

(2) If you used dilution air, either analyze background samples or assume that background emissions were zero. Refer to §1065.140 for dilution-air specifications.

(3) After quantifying all exhaust gases, record mean analyzer values after stabilizing a zero gas to each analyzer, then record mean analyzer values after stabilizing the span gas to the analyzer. Stabilization may include time to purge an analyzer of any sample gas, plus any additional time to account for analyzer response. Use these recorded values to correct for drift as described in §1065.550.

(4) Invalidate any test intervals that do not meet the range criteria in §1065.550. Note that it is acceptable that analyzers exceed 100% of their ranges when measuring emissions between test intervals, but not during test intervals. You do not have to retest an engine in the field if the range criteria are not met.

(5) Invalidate any test intervals that do not meet the drift criterion in §1065.550. For NMHC, invalidate any test intervals if the difference between the uncorrected and the corrected brake-specific NMHC emission values are within ±10% of the uncorrected results or the applicable standard, whichever is greater. For test intervals that do meet the drift criterion, correct those test intervals for drift according to §1065.672 and use the drift corrected results in emissions calculations.

(6) Unless you weighed PM in-situ, such as by using an inertial PM balance, place any used PM samples into covered or sealed containers and return them to the PM-stabilization environment and weigh them as described in §1065.595.

[70 FR 40516, July 13, 2005, as amended at 73 FR 37345, June 30, 2008]

§1065.940 Emission calculations.

(a) Perform emission calculations as described in §1065.650 to calculate brake-specific emissions for each test interval using any applicable information and instructions in the standard-setting part.

(b) You may use a fixed molar mass for the diluted exhaust mixture for field testing. Determine this fixed value by engineering analysis.

[75 FR 68467, Nov. 8, 2010]

Subpart K—Definitions and Other Reference Information

§1065.1001 Definitions.

The definitions in this section apply to this part. The definitions apply to all subparts unless we note otherwise. All undefined terms have the meaning the Act gives them. The definitions follow:

300 series stainless steel means any stainless steel alloy with a Unified Numbering System for Metals and Alloys number designated from S30100 to S39000. For all instances in this part where we specify 300 series stainless steel, such parts must also have a smooth inner-wall construction. We recommend an average roughness, R_a, no greater than 4 μm.

Accuracy means the absolute difference between a reference quantity

and the arithmetic mean of ten mean measurements of that quantity. Determine instrument accuracy, repeatability, and noise from the same data set. We specify a procedure for determining accuracy in § 1065.305.

Act means the Clean Air Act, as amended, 42 U.S.C. 7401–7671q.

Adjustable parameter means any device, system, or element of design that someone can adjust (including those which are difficult to access) and that, if adjusted, may affect emissions or engine performance during emission testing or normal in-use operation. This includes, but is not limited to, parameters related to injection timing and fueling rate. In some cases, this may exclude a parameter that is difficult to access if it cannot be adjusted to affect emissions without significantly degrading engine performance, or if it will not be adjusted in a way that affects emissions during in-use operation.

Aerodynamic diameter means the diameter of a spherical water droplet that settles at the same constant velocity as the particle being sampled.

Aftertreatment means relating to a catalytic converter, particulate filter, or any other system, component, or technology mounted downstream of the exhaust valve (or exhaust port) whose design function is to decrease emissions in the engine exhaust before it is exhausted to the environment. Exhaust-gas recirculation (EGR) and turbochargers are not aftertreatment.

Allowed procedures means procedures that we either specify in this part 1065 or in the standard-setting part or approve under § 1065.10.

Alternate procedures means procedures allowed under § 1065.10(c)(7).

Applicable standard means an emission standard to which an engine is subject; or a family emission limit to which an engine is certified under an emission credit program in the standard-setting part.

Aqueous condensation means the precipitation of water-containing constituents from a gas phase to a liquid phase. Aqueous condensation is a function of humidity, pressure, temperature, and concentrations of other constituents such as sulfuric acid. These parameters vary as a function of engine intake-air humidity, dilution-air humidity, engine air-to-fuel ratio, and fuel composition—including the amount of hydrogen and sulfur in the fuel.

Atmospheric pressure means the wet, absolute, atmospheric static pressure. Note that if you measure atmospheric pressure in a duct, you must ensure that there are negligible pressure losses between the atmosphere and your measurement location, and you must account for changes in the duct's static pressure resulting from the flow.

Auto-ranging means a gas analyzer function that automatically changes the analyzer digital resolution to a larger range of concentrations as the concentration approaches 100% of the analyzer's current range. Auto-ranging does not mean changing an analog amplifier gain within an analyzer.

Auxiliary emission-control device means any element of design that senses temperature, motive speed, engine RPM, transmission gear, or any other parameter for the purpose of activating, modulating, delaying, or deactivating the operation of any part of the emission-control system.

Brake power has the meaning given in the standard-setting part. If it is not defined in the standard-setting part, brake power means the usable power output of the engine, not including power required to fuel, lubricate, or heat the engine, circulate coolant to the engine, or to operate aftertreatment devices. If the engine does not power these accessories during a test, subtract the work required to perform these functions from the total work used in brake-specific emission calculations. Subtract engine fan work from total work only for air-cooled engines.

C_1 equivalent (or basis) means a convention of expressing HC concentrations based on the total number of carbon atoms present, such that the C_1 equivalent of a molar HC concentration equals the molar concentration multiplied by the mean number of carbon atoms in each HC molecule. For example, the C_1 equivalent of 10 μmol/mol of propane (C_3H_8) is 30 μmol/mol. C_1 equivalent molar values may be denoted as ''ppmC'' in the standard-setting part.

Calibration means the process of setting a measurement system's response so that its output agrees with a range of reference signals. Contrast with ''verification''.

Calibration gas means a purified gas mixture used to calibrate gas analyzers. Calibration gases must meet the specifications of §1065.750. Note that calibration gases and span gases are qualitatively the same, but differ in terms of their primary function. Various performance verification checks for gas analyzers and sample handling components might refer to either calibration gases or span gases.

Certification means relating to the process of obtaining a certificate of conformity for an engine family that complies with the emission standards and requirements in the standard-setting part.

Compression-ignition means relating to a type of reciprocating, internal-combustion engine that is not a spark-ignition engine.

Confidence interval means the range associated with a probability that a quantity will be considered statistically equivalent to a reference quantity.

Constant-speed engine means an engine whose certification is limited to constant-speed operation. Engines whose constant-speed governor function is removed or disabled are no longer constant-speed engines.

Constant-speed operation means engine operation with a governor that automatically controls the operator demand to maintain engine speed, even under changing load. Governors do not always maintain speed exactly constant. Typically speed can decrease (0.1 to 10) % below the speed at zero load, such that the minimum speed occurs near the engine's point of maximum power. (Note: An engine with an adjustable governor setting may be considered to operate at constant speed, subject to our approval. For such engines, the governor setting is considered an adjustable parameter.)

Coriolis meter means a flow-measurement instrument that determines the mass flow of a fluid by sensing the vibration and twist of specially designed flow tubes as the flow passes through them. The twisting characteristic is called the Coriolis effect. According to Newton's Second Law of Motion, the amount of sensor tube twist is directly proportional to the mass flow rate of the fluid flowing through the tube. See §1065.220.

Designated Compliance Officer means the Director, Compliance and Innovative Strategies Division (6405–J), U.S. Environmental Protection Agency, 1200 Pennsylvania Ave., NW., Washington, DC 20460.

Dewpoint means a measure of humidity stated as the equilibrium temperature at which water condenses under a given pressure from moist air with a given absolute humidity. Dewpoint is specified as a temperature in °C or K, and is valid only for the pressure at which it is measured. See §1065.645 to determine water vapor mole fractions from dewpoints using the pressure at which the dewpoint is measured.

Dilution ratio (DR) means the amount of diluted exhaust per amount of undiluted exhaust.

Discrete-mode means relating to a discrete-mode type of steady-state test, as described in the standard-setting part.

Dispersion means either:

(1) The broadening and lowering of a signal due to any fluid capacitance, fluid mixing, or electronic filtering in a sampling system. (Note: To adjust a signal so its dispersion matches that of another signal, you may adjust the system's fluid capacitance, fluid mixing, or electronic filtering.)

(2) The mixing of a fluid, especially as a result of fluid mechanical forces or chemical diffusion.

Drift means the difference between a zero or calibration signal and the respective value reported by a measurement instrument immediately after it was used in an emission test, as long as you zeroed and spanned the instrument just before the test.

Duty cycle means one of the following:

(1) A series of speed and torque values (or power values) that an engine must follow during a laboratory test. Duty cycles are specified in the standard-setting part. A single duty cycle may consist of one or more test intervals. A series of speed and torque values meeting the definition of this paragraph (1) may also be considered a test

cycle. For example, a duty cycle may be a ramped-modal cycle, which has one test interval; a cold-start plus hot-start transient cycle, which has two test intervals; or a discrete-mode cycle, which has one test interval for each mode.

(2) A set of weighting factors and the corresponding speed and torque values, where the weighting factors are used to combine the results of multiple test intervals into a composite result.

Electronic control module means an engine's electronic device that uses data from engine sensors to control engine parameters.

Emission-control system means any device, system, or element of design that controls or reduces the emissions of regulated pollutants from an engine.

Emission-data engine means an engine that is tested for certification. This includes engines tested to establish deterioration factors.

Emission-related maintenance means maintenance that substantially affects emissions or is likely to substantially affect emission deterioration.

Engine means an engine to which this part applies.

Engine family means a group of engines with similar emission characteristics throughout the useful life, as specified in the standard-setting part.

Engine governed speed means the engine operating speed when it is controlled by the installed governor.

Exhaust-gas recirculation means a technology that reduces emissions by routing exhaust gases that had been exhausted from the combustion chamber(s) back into the engine to be mixed with incoming air before or during combustion. The use of valve timing to increase the amount of residual exhaust gas in the combustion chamber(s) that is mixed with incoming air before or during combustion is not considered exhaust-gas recirculation for the purposes of this part.

Fall time, t_{90-10}, means the time interval of a measurement instrument's response after any step decrease to the input between the following points:

(1) The point at which the response has fallen 10% of the total amount it will fall in response to the step change.

(2) The point at which the response has fallen 90% of the total amount it will fall in response to the step change.

Flow-weighted mean means the mean of a quantity after it is weighted proportional to a corresponding flow rate. For example, if a gas concentration is measured continuously from the raw exhaust of an engine, its flow-weighted mean concentration is the sum of the products of each recorded concentration times its respective exhaust flow rate, divided by the sum of the recorded flow rates. As another example, the bag concentration from a CVS system is the same as the flow-weighted mean concentration, because the CVS system itself flow-weights the bag concentration.

Fuel type means a general category of fuels such as gasoline or LPG. There can be multiple grades within a single type of fuel, such as all-season and winter-grade gasoline.

Good engineering judgment means judgments made consistent with generally accepted scientific and engineering principles and all available relevant information. See 40 CFR 1068.5 for the administrative process we use to evaluate good engineering judgment.

HEPA filter means high-efficiency particulate air filters that are rated to achieve a minimum initial particle-removal efficiency of 99.97% using ASTM F 1471–93 (incorporated by reference in § 1065.1010).

Hydraulic diameter means the diameter of a circle whose area is equal to the area of a noncircular cross section of tubing, including its wall thickness. The wall thickness is included only for the purpose of facilitating a simplified and nonintrusive measurement.

Hydrocarbon (HC) means THC, THCE, NMHC, or NMHCE, as applicable. Hydrocarbon generally means the hydrocarbon group on which the emission standards are based for each type of fuel and engine.

Identification number means a unique specification (for example, a model number/serial number combination) that allows someone to distinguish a particular engine from other similar engines.

Idle speed means the lowest engine speed with minimum load (greater than

or equal to zero load), where an engine governor function controls engine speed. For engines without a governor function that controls idle speed, idle speed means the manufacturer-declared value for lowest engine speed possible with minimum load. Note that warm idle speed is the idle speed of a warmed-up engine.

Intermediate test speed has the meaning given in § 1065.610.

Linearity means the degree to which measured values agree with respective reference values. Linearity is quantified using a linear regression of pairs of measured values and reference values over a range of values expected or observed during testing. Perfect linearity would result in an intercept, a_0, equal to zero, a slope, a_1, of one, a coefficient of determination, r^2, of one, and a standard error of the estimate, *SEE*, of zero. The term ''linearity'' is not used in this part to refer to the shape of a measurement instrument's unprocessed response curve, such as a curve relating emission concentration to voltage output. A properly performing instrument with a nonlinear response curve will meet linearity specifications.

Manufacturer has the meaning given in section 216(1) of the Act. In general, this term includes any person who manufactures an engine or vehicle for sale in the United States or otherwise introduces a new nonroad engine into commerce in the United States. This includes importers who import engines or vehicles for resale.

Maximum test speed has the meaning given in § 1065.610.

Maximum test torque has the meaning given in § 1065.610.

Measurement allowance means a specified adjustment in the applicable emission standard or a measured emission value to reflect the relative quality of the measurement. See the standard-setting part to determine whether any measurement allowances apply for your testing. Measurement allowances generally apply only for field testing and are intended to account for reduced accuracy or precision that result from using field-grade measurement systems.

Mode means one of the following:

(1) A distinct combination of engine speed and load for steady-state testing.

(2) A continuous combination of speeds and loads specifying a transition during a ramped-modal test.

(3) A distinct operator demand setting, such as would occur when testing locomotives or constant-speed engines.

NIST-accepted means relating to a value that has been assigned or named by NIST.

NIST-traceable means relating to a standard value that can be related to NIST-stated references through an unbroken chain of comparisons, all having stated uncertainties, as specified in NIST Technical Note 1297 (incorporated by reference in § 1065.1010). Allowable uncertainty limits specified for NIST-traceability refer to the propagated uncertainty specified by NIST. You may ask to use other internationally recognized standards that are equivalent to NIST standards.

Noise means the precision of 30 seconds of updated recorded values from a measurement instrument as it quantifies a zero or reference value. Determine instrument noise, repeatability, and accuracy from the same data set. We specify a procedure for determining noise in § 1065.305.

Nonmethane hydrocarbons (NMHC) means the sum of all hydrocarbon species except methane. Refer to § 1065.660 for NMHC determination.

Nonmethane hydrocarbon equivalent (NMHCE) means the sum of the carbon mass contributions of non-oxygenated nonmethane hydrocarbons, alcohols and aldehydes, or other organic compounds that are measured separately as contained in a gas sample, expressed as exhaust nonmethane hydrocarbon from petroleum-fueled engines. The hydrogen-to-carbon ratio of the equivalent hydrocarbon is 1.85:1.

Nonroad means relating to nonroad engines.

Nonroad engine has the meaning we give in 40 CFR 1068.30. In general this means all internal-combustion engines except motor vehicle engines, stationary engines, engines used solely for competition, or engines used in aircraft.

Open crankcase emissions means any flow from an engine's crankcase that is emitted directly into the environment.

Crankcase emissions are not ''open crankcase emissions'' if the engine is designed to always route all crankcase emissions back into the engine (for example, through the intake system or an aftertreatment system) such that all the crankcase emissions, or their products, are emitted into the environment only through the engine exhaust system.

Operator demand means an engine operator's input to control engine output. The ''operator'' may be a person (i.e., manual), or a governor (i.e., automatic) that mechanically or electronically signals an input that demands engine output. Input may be from an accelerator pedal or signal, a throttle-control lever or signal, a fuel lever or signal, a speed lever or signal, or a governor setpoint or signal. Output means engine power, P, which is the product of engine speed, f_n, and engine torque, T.

Oxides of nitrogen means NO and NO_2 as measured by the procedures specified in §1065.270. Oxides of nitrogen are expressed quantitatively as if the NO is in the form of NO_2, such that you use an effective molar mass for all oxides of nitrogen equivalent to that of NO_2.

Oxygenated fuels means fuels composed of oxygen-containing compounds, such as ethanol or methanol. Testing engines that use oxygenated fuels generally requires the use of the sampling methods in subpart I of this part. However, you should read the standard-setting part and subpart I of this part to determine appropriate sampling methods.

Partial pressure means the pressure, p, attributable to a single gas in a gas mixture. For an ideal gas, the partial pressure divided by the total pressure is equal to the constituent's molar concentration, x.

Percent (%) means a representation of exactly 0.01 (with infinite precision). Significant digits for the product of % and another value, or the expression of any other value as a percentage, are defined as follows:

(1) Where we specify some percentage of a total value, the calculated value has the same number of significant digits as the total value. The specified percentage by which the total value is multiplied has infinite precision. Note that not all displayed or recorded digits are significant. For example, 2% of a span value where the span value is 101.3302 is 2.026604. However, where the span value has limited precision such that only one digit to the right of the decimal is significant (*i.e.*, the actual value is 101.3), 2% of the span value is 2.026.

(2) In other cases, determine the number of significant digits using the same method as you would use for determining the number of significant digits of any calculated value. For example, a calculated value of 0.321, where all three digits are significant, is equivalent to 32.1%.

Portable emission measurement system (PEMS) means a measurement system consisting of portable equipment that can be used to generate brake-specific emission measurements during field testing or laboratory testing.

Precision means two times the standard deviation of a set of measured values of a single zero or reference quantity.

Procedures means all aspects of engine testing, including the equipment specifications, calibrations, calculations and other protocols and specifications needed to measure emissions, unless we specify otherwise.

Proving ring is a device used to measure static force based on the linear relationship between stress and strain in an elastic material. It is typically a steel alloy ring, and you measure the deflection (strain) of its diameter when a static force (stress) is applied across its diameter.

PTFE means polytetrafluoroethylene, commonly known as Teflon™.

Ramped-modal means relating to a ramped-modal type of steady-state test, as described in the standard-setting part.

Recommend has the meaning given in §1065.201.

Regression statistics means any of the regression statistics specified in §1065.602.

Repeatability means the precision of ten mean measurements of a reference quantity. Determine instrument repeatability, accuracy, and noise from

the same data set. We specify a procedure for determining repeatability in § 1065.305.

Revoke has the meaning given in 40 CFR 1068.30.

Rise time, t_{10-90}, means the time interval of a measurement instrument's response after any step increase to the input between the following points:

(1) The point at which the response has risen 10% of the total amount it will rise in response to the step change.

(2) The point at which the response has risen 90% of the total amount it will rise in response to the step change.

Roughness (or average roughness, R_a) means the size of finely distributed vertical surface deviations from a smooth surface, as determined when traversing a surface. It is an integral of the absolute value of the roughness profile measured over an evaluation length.

Round means to round numbers according to NIST SP 811 (incorporated by reference in § 1065.1010), unless otherwise specified.

Scheduled maintenance means adjusting, repairing, removing, disassembling, cleaning, or replacing components or systems periodically to keep a part or system from failing, malfunctioning, or wearing prematurely. It also may mean actions you expect are necessary to correct an overt indication of failure or malfunction for which periodic maintenance is not appropriate.

Shared atmospheric pressure meter means an atmospheric pressure meter whose output is used as the atmospheric pressure for an entire test facility that has more than one dynamometer test cell.

Shared humidity measurement means a humidity measurement that is used as the humidity for an entire test facility that has more than one dynamometer test cell.

Span means to adjust an instrument so that it gives a proper response to a calibration standard that represents between 75% and 100% of the maximum value in the instrument range or expected range of use.

Span gas means a purified gas mixture used to span gas analyzers. Span gases must meet the specifications of § 1065.750. Note that calibration gases and span gases are qualitatively the same, but differ in terms of their primary function. Various performance verification checks for gas analyzers and sample handling components might refer to either calibration gases or span gases.

Spark-ignition means relating to a gasoline-fueled engine or any other type of engine with a spark plug (or other sparking device) and with operating characteristics significantly similar to the theoretical Otto combustion cycle. Spark-ignition engines usually use a throttle to regulate intake air flow to control power during normal operation.

Special procedures means procedures allowed under § 1065.10(c)(2).

Specified procedures means procedures we specify in this part 1065 or the standard-setting part. Other procedures allowed or required by § 1065.10(c) are not specified procedures.

Standard deviation has the meaning given in § 1065.602. Note this is the standard deviation for a non-biased sample.

Standard-setting part means the part in the Code of Federal Regulations that defines emission standards for a particular engine. See § 1065.1(a).

Steady-state means relating to emission tests in which engine speed and load are held at a finite set of nominally constant values. Steady-state tests are either discrete-mode tests or ramped-modal tests.

Stoichiometric means relating to the particular ratio of air and fuel such that if the fuel were fully oxidized, there would be no remaining fuel or oxygen. For example, stoichiometric combustion in a gasoline-fueled engine typically occurs at an air-to-fuel mass ratio of about 14.7:1.

Storage medium means a particulate filter, sample bag, or any other storage device used for batch sampling.

t_{0-50} means the time interval of a measurement system's response after any step increase to the input between the following points:

(1) The point at which the step change is initiated at the sample probe.

(2) The point at which the response has risen 50% of the total amount it will rise in response to the step change.

t_{100-50} means the time interval of a measurement system's response after any step decrease to the input between the following points:

(1) The point at which the step change is initiated at the sample probe.

(2) The point at which the response has fallen 50% of the total amount it will fall in response to the step change.

Test engine means an engine in a test sample.

Test interval means a duration of time over which you determine brake-specific emissions. For example, the standard-setting part may specify a complete laboratory duty cycle as a cold-start test interval, plus a hot-start test interval. As another example, a standard-setting part may specify a field-test interval, such as a ''not-to-exceed'' (NTE) event, as a duration of time over which an engine operates within a certain range of speed and torque. In cases where multiple test intervals occur over a duty cycle, the standard-setting part may specify additional calculations that weight and combine results to arrive at composite values for comparison against the applicable standards.

Test sample means the collection of engines selected from the population of an engine family for emission testing.

Tolerance means the interval in which at least 95% of a set of recorded values of a certain quantity must lie. Use the specified recording frequencies and time intervals to determine if a quantity is within the applicable tolerance. The concept of tolerance is intended to address random variability. You may not take advantage of the tolerance specification to incorporate a bias into a measurement.

Total hydrocarbon (THC) means the combined mass of organic compounds measured by the specified procedure for measuring total hydrocarbon, expressed as a hydrocarbon with a hydrogen-to-carbon mass ratio of 1.85:1.

Total hydrocarbon equivalent (THCE) means the sum of the carbon mass contributions of non-oxygenated hydrocarbons, alcohols and aldehydes, or other organic compounds that are measured separately as contained in a gas sample, expressed as exhaust hydrocarbon from petroleum-fueled engines. The hydrogen-to-carbon ratio of the equivalent hydrocarbon is 1.85:1.

Transformation time, t_{50}, means the overall system response time to any step change in input, generally the average of the time to reach 50% response to a step increase, t_{0-50}, or to a step decrease, t_{100-50}.

Uncertainty means uncertainty with respect to NIST-traceability. See the definition of NIST-traceable in this section.

United States means the States, the District of Columbia, the Commonwealth of Puerto Rico, the Commonwealth of the Northern Mariana Islands, Guam, American Samoa, and the U.S. Virgin Islands.

Useful life means the period during which a new engine is required to comply with all applicable emission standards. The standard-setting part defines the specific useful-life periods for individual engines.

Variable-speed engine means an engine that is not a constant-speed engine.

Vehicle means any vehicle, vessel, or type of equipment using engines to which this part applies. For purposes of this part, the term ''vehicle'' may include nonmotive machines or equipment such as a pump or generator.

Verification means to evaluate whether or not a measurement system's outputs agree with a range of applied reference signals to within one or more predetermined thresholds for acceptance. Contrast with ''calibration''.

We (us, our) means the Administrator of the Environmental Protection Agency and any authorized representatives.

Work has the meaning given in § 1065.110.

Zero means to adjust an instrument so it gives a zero response to a zero calibration standard, such as purified nitrogen or purified air for measuring concentrations of emission constituents.

Zero gas means a gas that yields a zero response in an analyzer. This may either be purified nitrogen, purified air, a combination of purified air and purified nitrogen. For field testing, *zero gas* may include ambient air.

[70 FR 40516, July 13, 2005, as amended at 73 FR 37346, June 30, 2008; 73 FR 59342, Oct. 8, 2008; 74 FR 8428, Feb. 24, 2009; 74 FR 56518, Oct. 30, 2009; 75 FR 23058, Apr. 30, 2010]

§ 1065.1005 Symbols, abbreviations, acronyms, and units of measure.

The procedures in this part generally follow the International System of Units (SI), as detailed in NIST Special Publication 811, 1995 Edition, ''Guide for the Use of the International System, of Units (SI),'' which we incorporate by reference in § 1065.1010. See § 1065.25 for specific provisions related to these conventions. This section summarizes the way we use symbols, units of measure, and other abbreviations.

(a) *Symbols for quantities.* This part uses the following symbols and units of measure for various quantities:

Symbol	Quantity	Unit	Unit symbol	Base SI units
%	percent	0.01	%	10^{-2}
α	atomic hydrogen to carbon ratio.	mole per mole	mol/mol	1
A	area	square meter	m^2	m^2
A_0	intercept of least squares regression.			
A_1	slope of least squares regression.			
β	ratio of diameters	meter per meter	m/m	1
β	atomic oxygen to carbon ratio	mole per mole	mol/mol	1
$C^{\#}$	number of carbon atoms in a molecule.			
d	Diameter	meter	m	m
DR	dilution ratio	mole per mol	mol/mol	1
ε	error between a quantity and its reference.			
e	brake-specific basis	gram per kilowatt hour	g/(kW.h)	$g.3.6^{-1}.10^{6}.m^{-2}.kgs^{2}$
F	F-test statistic.			
f	frequency	hertz	Hz	s^{-1}
f_n	rotational frequency (shaft)	revolutions per minute	rev/min	$2.pi.60^{-1}.s^{-1}$
γ	ratio of specific heats	(joule per kilogram kelvin) per (joule per kilogram kelvin).	(J/(kg.K))/(J/(kg.K)).	1
K	correction factor			1
l	length	meter	m	m
μ	viscosity, dynamic	pascal second	Pa's	$m^{-1}.kg.s^{-1}$
M	molar mass[1]	gram per mole	g/mol	$10^{-3}.kg.mol^{-1}$
m	mass	kilogram	kg	kg
$\dot{m}$	mass rate	kilogram per second	kg/s	$kg.s^{-1}$
v	viscosity, kinematic	meter squared per second	m^2/s	$m^2.s^{-1}$
N	total number in series.			
n	amount of substance	mole	mol	mol
$\dot{n}$	amount of substance rate	mole per second	mol/s	$mol.s^{-1}$
P	power	kilowatt	kW	$10^{3}.m^{2}.kg.s^{-3}$
PF	penetration fraction.			
p	pressure	pascal	Pa	$m^{-1}.kg.s^{-2}$
ρ	mass density	kilogram per cubic meter	kg/m^3	$kg.m^{-3}$
r	ratio of pressures	pascal per pascal	Pa/Pa	1
R^2	coefficient of determination.			
Ra	average surface roughness	micrometer	µm	m^{-6}
$Re^{\#}$	Reynolds number.			
RF	response factor.			
RH %	relative humidity	0.01	%	10^{-2}
σ	non-biased standard deviation.			
S	Sutherland constant	kelvin	K	K
SEE	standard estimate of error.			
T	absolute temperature	kelvin	K	K
T	Celsius temperature	degree Celsius	°C	K–273.15
T	torque (moment of force)	newton meter	N.m	$m^2.kg.s^{-2}$
t	time	second	s	s
Δt	time interval, period, 1/frequency.	second	s	s
V	volume	cubic meter	m^3	m^3
$\dot{V}$	volume rate	cubic meter per second	m^3/s	$m^3.s^{-1}$
W	work	kilowatt hour	kW.h	$3.6.10^{-6}.m^{2}.kg.s^{-2}$
w_c	carbon mass fraction	gram per gram	g/g	1
x	amount of substance mole fraction 2.	mole per mole	mol/mol	1
$\bar{X}$	flow-weighted mean concentration.	mole per mole	mol/mol	1
y	generic variable.			

[1] See paragraph (f)(2) of this section for the values to use for molar masses. Note that in the cases of NO_X and HC, the regulations specify effective molar masses based on assumed speciation rather than actual speciation.

[2] Note that mole fractions for THC, THCE, NMHC, NMHCE, and NOTHC are expressed on a C_1 equivalent basis.

(b) *Symbols for chemical species*. This part uses the following symbols for chemical species and exhaust constituents:

Symbol	Species
Ar	argon.
C	carbon.
CH_4	methane.
C_2H_6	ethane.
C_3H_8	propane.
C_4H_{10}	butane.
C_5H_{12}	pentane.
CO	carbon monoxide.
CO_2	carbon dioxide.
H	atomic hydrogen.
H_2	molecular hydrogen.
H_2O	water.
He	helium.
^{85}Kr	krypton 85.
N_2	molecular nitrogen.
NMHC	nonmethane hydrocarbon.
NMHCE	nonmethane hydrocarbon equivalent.
NO	nitric oxide.
NO_2	nitrogen dioxide.
NO_X	oxides of nitrogen.
N_2O	nitrous oxide.
NOTHC	nonoxygenated hydrocarbon.
O_2	molecular oxygen.
OHC	oxygenated hydrocarbon.
^{210}Po	polonium 210.
PM	particulate mass.
S	sulfur.
SO_2	sulfur dioxide.
THC	total hydrocarbon.
ZrO_2	zirconium dioxide.

(c) *Prefixes*. This part uses the following prefixes to define a quantity:

Symbol	Quantity	Value
μ	micro	10^{-6}
m	milli	10^{-3}
c	centi	10^{-2}
k	kilo	10^{3}
M	mega	10^{6}

(d) *Superscripts*. This part uses the following superscripts to define a quantity:

Superscript	Quantity
overbar (such as $\bar{y}$)	arithmetic mean.
overdot (such as $\dot{y}$)	quantity per unit time.

(e) *Subscripts*. This part uses the following subscripts to define a quantity:

Subscript	Quantity
abs	absolute quantity.
act	actual condition.
air	air, dry
atmos	atmospheric.
cal	calibration quantity.
CFV	critical flow venturi.
cor	corrected quantity.
dil	dilution air.
dexh	diluted exhaust.
exh	raw exhaust.
exp	expected quantity.
i	an individual of a series.
idle	condition at idle.
in	quantity in.
init	initial quantity, typically before an emission test.
j	an individual of a series.
max	the maximum (i.e., peak) value expected at the standard over a test interval; not the maximum of an instrument range.
meas	measured quantity.
out	quantity out.
part	partial quantity.
PDP	positive-displacement pump.
ref	reference quantity.
rev	revolution.
sat	saturated condition.
slip	PDP slip.
span	span quantity.
SSV	subsonic venturi.
std	standard condition.
test	test quantity.
uncor	uncorrected quantity.
zero	zero quantity.

(f) *Constants*. (1) This part uses the following constants for the composition of dry air:

Symbol	Quantity	mol/mol
x_{Arair}	amount of argon in dry air	0.00934
x_{CO2air}	amount of carbon dioxide in dry air.	0.000375
x_{N2air}	amount of nitrogen in dry air	0.78084
x_{O2air}	amount of oxygen in dry air	0.209445

(2) This part uses the following molar masses or effective molar masses of chemical species:

Symbol	Quantity	g/mol (10^{-3} kg·mol^{-1})
M_{air}	molar mass of dry air	28.96559
M_{Ar}	molar mass of argon	39.948
M_{C}	molar mass of carbon	12.0107
M_{CO}	molar mass of carbon monoxide	28.0101
M_{CO2}	molar mass of carbon dioxide	44.0095
M_{H}	molar mass of atomic hydrogen	1.00794
M_{H2}	molar mass of molecular hydrogen	2.01588
M_{H2O}	molar mass of water	18.01528
M_{He}	molar mass of helium	4.002602

Symbol	Quantity	g/mol (10^{-3}·kg·mol^{-1})
M_N	molar mass of atomic nitrogen	14.0067
M_{N2}	molar mass of molecular nitrogen	28.0134
M_{NMHC}	effective molar mass of nonmethane hydrocarbon [2]	13.875389
M_{NMHCE}	effective molar mass of nonmethane equivalent hydrocarbon [2]	13.875389
M_{NOx}	effective molar mass of oxides of nitrogen [3]	46.0055
M_{N2O}	effective molar mass of nitrous oxide	44.0128
M_O	molar mass of atomic oxygen	15.9994
M_{O2}	molar mass of molecular oxygen	31.9988
M_{C3H8}	molar mass of propane	44.09562
M_S	molar mass of sulfur	32.065
M_{THC}	effective molar mass of total hydrocarbon [2]	13.875389
M_{THCE}	effective molar mass of total hydrocarbon equivalent [2]	13.875389

[1] See paragraph (f)(1) of this section for the composition of dry air
[2] The effective molar masses of THC, THCE, NMHC, and NMHCE are defined by an atomic hydrogen-to-carbon ratio, α, of 1.85
[3] The effective molar mass of NOx is defined by the molar mass of nitrogen dioxide, NO_2

(3) This part uses the following molar gas constant for ideal gases:

Symbol	Quantity	J/(mol) · K) (m^2·kg·s^{-2} mol^{-1}· K^{-1})
R	molar gas constant	8.314472

(4) This part uses the following ratios of specific heats for dilution air and diluted exhaust:

Symbol	Quantity	[J/(kg·K)]/[J/(kg·K)]
γ_{air}	ratio of specific heats for intake air or dilution air.	1.399
γ_{dil}	ratio of specific heats for diluted exhaust.	1.399
γ_{exh}	ratio of specific heats for raw exhaust.	1.385

(g) *Other acronyms and abbreviations.* This part uses the following additional abbreviations and acronyms:

ASTM American Society for Testing and Materials.
BMD bag mini-diluter.
BSFC brake-specific fuel consumption.
CARB California Air Resources Board.
CFR Code of Federal Regulations.
CFV critical-flow venturi.
CI compression-ignition.
CITT Curb Idle Transmission Torque.
CLD chemiluminescent detector.
CVS constant-volume sampler.
DF deterioration factor.
ECM electronic control module.
EFC electronic flow control.
EGR exhaust gas recirculation.
EPA Environmental Protection Agency.
FEL Family Emission Limit
FID flame-ionization detector.
GC gas chromatograph.
GC–ECD gas chromatograph with an electron-capture detector.
IBP initial boiling point.
ISO International Organization for Standardization.
LPG liquefied petroleum gas.
NDIR nondispersive infrared.
NDUV nondispersive ultraviolet.
NIST National Institute for Standards and Technology.
PDP positive-displacement pump.
PEMS portable emission measurement system.
PFD partial-flow dilution.
PMP Polymethylpentene.
pt. a single point at the mean value expected at the standard.
PTFE polytetrafluoroethylene (commonly known as Teflon™).
RE rounding error.
RMC ramped-modal cycle.
RMS root-mean square.
RTD resistive temperature detector.
SSV subsonic venturi.
SI spark-ignition.
UCL upper confidence limit.
UFM ultrasonic flow meter.
U.S.C. United States Code.

[70 FR 40516, July 13, 2005, as amended at 73 FR 37346, June 30, 2008; 73 FR 59342, Oct. 8, 2008; 74 FR 56518, Oct. 30, 2009]

§ 1065.1010 Reference materials.

Documents listed in this section have been incorporated by reference into this part. The Director of the Federal Register approved the incorporation by reference as prescribed in 5 U.S.C. 552(a) and 1 CFR part 51. Anyone may inspect copies at the U.S. EPA, Air and Radiation Docket and Information

Center, 1301 Constitution Ave., NW., Room B102, EPA West Building, Washington, DC 20460 or at the National Archives and Records Administration (NARA). For information on the availability of this material at NARA, call 202–741–6030, or go to: *http://www.archives.gov/federal_register/code_of_federal_regulations/ibr_locations.html*.

(a) *ASTM material*. Table 1 of this section lists material from the American Society for Testing and Materials that we have incorporated by reference. The first column lists the number and name of the material. The second column lists the sections of this part where we reference it. Anyone may purchase copies of these materials from the American Society for Testing and Materials, 100 Barr Harbor Dr., P.O. Box C700, West Conshohocken, PA 19428 or *www.astm.com*. Table 1 follows:

TABLE 1 OF § 1065.1010.–ASTM MATERIALS

Document No. and name	Part 1065 reference
ASTM D86–07a, Standard Test Method for Distillation of Petroleum Products at Atmospheric Pressure	1065.703, 1065.710
ASTM D93–07, Standard Test Methods for Flash Point by Pensky-Martens Closed Cup Tester	1065.703
ASTM D445–06, Standard Test Method for Kinematic Viscosity of Transparent and Opaque Liquids (and the Calculation of Dynamic Viscosity)	1065.703
ASTM D613–05, Standard Test Method for Cetane Number of Diesel Fuel Oil	1065.703
ASTM D910–07, Standard Specification for Aviation Gasolines	1065.701
ASTM D975–07b, Standard Specification for Diesel Fuel Oils	1065.701
ASTM D1267–02 (Reapproved 2007), Standard Test Method for Gage Vapor Pressure of Liquefied Petroleum (LP) Gases (LP-Gas Method)	1065.720
ASTM D1319–03, Standard Test Method for Hydrocarbon Types in Liquid Petroleum Products by Fluorescent Indicator Adsorption	1065.710
ASTM D1655–07e01, Standard Specification for Aviation Turbine Fuels	1065.701
ASTM D1837–02a (Reapproved 2007), Standard Test Method for Volatility of Liquefied Petroleum (LP) Gases	1065.720
ASTM D1838–07, Standard Test Method for Copper Strip Corrosion by Liquefied Petroleum (LP) Gases	1065.720
ASTM D1945–03, Standard Test Method for Analysis of Natural Gas by Gas Chromatography	1065.715
ASTM D2158–05, Standard Test Method for Residues in Liquefied Petroleum (LP) Gases	1065.720
ASTM D2163–05, Standard Test Method for Analysis of Liquefied Petroleum (LP) Gases and Propene Concentrates by Gas Chromatography	1065.720
ASTM D2598–02 (Reapproved 2007), Standard Practice for Calculation of Certain Physical Properties of Liquefied Petroleum (LP) Gases from Compositional Analysis	1065.720
ASTM D2622–07, Standard Test Method for Sulfur in Petroleum Products by Wavelength Dispersive X-ray Fluorescence Spectrometry	1065.703, 1065.710
ASTM D2713–91 (Reapproved 2001), Standard Test Method for Dryness of Propane (Valve Freeze Method)	1065.720
ASTM D2784–06, Standard Test Method for Sulfur in Liquefied Petroleum Gases (Oxy-Hydrogen Burner or Lamp)	1065.720
ASTM D2880–03, Standard Specification for Gas Turbine Fuel Oils	1065.701
ASTM D2986–95a (Reapproved 1999), Standard Practice for Evaluation of Air Assay Media by the Monodisperse DOP (Dioctyl Phthalate) Smoke Test	1065.170
ASTM D3231–07, Standard Test Method for Phosphorus in Gasoline	1065.710
ASTM D3237–06e01, Standard Test Method for Lead in Gasoline By Atomic Absorption Spectroscopy	1065.710
ASTM D4052–96e01 (Reapproved 2002), Standard Test Method for Density and Relative Density of Liquids by Digital Density Meter	1065.703
ASTM D4814–07a, Standard Specification for Automotive Spark-Ignition Engine Fuel	1065.701
ASTM D5186–03, Standard Test Method for Determination of the Aromatic Content and Polynuclear Aromatic Content of Diesel Fuels and Aviation Turbine Fuels By Supercritical Fluid Chromatography	1065.703
ASTM D5191–07, Standard Test Method for Vapor Pressure of Petroleum Products (Mini Method)	1065.710
ASTM D5797–07, Standard Specification for Fuel Methanol (M70–M85) for Automotive Spark-Ignition Engines	1065.701
ASTM D5798–07, Standard Specification for Fuel Ethanol (Ed75–Ed85) for Automotive Spark-Ignition Engines	1065.701
ASTM D6615–06, Standard Specification for Jet B Wide-Cut Aviation Turbine Fuel	1065.701
ASTM D6751–07b, Standard Specification for Biodiesel Fuel Blend Stock (B100) for Middle Distillate Fuels	1065.701
ASTM D6985–04a, Standard Specification for Middle Distillate Fuel Oil—Military Marine Applications	1065.701
ASTM F1471–93 (Reapproved 2001), Standard Test Method for Air Cleaning Performance of a High-Efficiency Particulate Air Filter System	1065.1001

(b) *ISO material*. Table 2 of this section lists material from the International Organization for Standardization that we have incorporated by reference. The first column lists the number and name of the material. The second column lists the section of this part where we reference it. Anyone may purchase copies of these materials from the International Organization for Standardization, Case Postale 56,

CH–1211 Geneva 20, Switzerland or *www.iso.org*. Table 2 follows:

TABLE 2 OF § 1065.1010—ISO MATERIALS

Document No. and name	Part 1065 reference
ISO 2719:2002, Determination of flash point—Pensky-Martens closed cup method	1065.705
ISO 3016:1994, Petroleum products—Determination of pour point	1065.705
ISO 3104:1994/Cor 1:1997, Petroleum products—Transparent and opaque liquids—Determination of kinematic viscosity and calculation of dynamic viscosity	1065.705
ISO 3675:1998, Crude petroleum and liquid petroleum products—Laboratory determination of density—Hydrometer method	1065.705
ISO 3733:1999, Petroleum products and bituminous materials—Determination of water—Distillation method	1065.705
ISO 6245:2001, Petroleum products—Determination of ash	1065.705
ISO 8217:2005, Petroleum products—Fuels (class F)—Specifications of marine fuels	1065.705
ISO 8754:2003, Petroleum products—Determination of sulfur content—Energy-dispersive X-ray fluorescence spectrometry	1065.705
ISO 10307–2:1993, Petroleum products—Total sediment in residual fuel oils—Part 2: Determination using standard procedures for ageing	1065.705
ISO 10370:1993/Cor 1:1996, Petroleum products—Determination of carbon residue—Micro method	1065.705
ISO 10478:1994, Petroleum products—Determination of aluminium and silicon in fuel oils—Inductively coupled plasma emission and atomic absorption spectroscopy methods	1065.705
ISO 12185:1996/Cor 1:2001, Crude petroleum and petroleum products—Determination of density—Oscillating U-tube method	1065.705
ISO 14596:2007, Petroleum products—Determination of sulfur content—Wavelength-dispersive X-ray fluorescence spectrometry	1065.705
ISO 14597:1997, Petroleum products—Determination of vanadium and nickel content—Wavelength-dispersive X-ray fluorescence spectrometry	1065.705
ISO 14644–1:1999, Cleanrooms and associated controlled environments	1065.190

(c) *NIST* material. Table 3 of this section lists material from the National Institute of Standards and Technology that we have incorporated by reference. The first column lists the number and name of the material. The second column lists the section of this part where we reference it. Anyone may purchase copies of these materials from the Government Printing Office, Washington, DC 20402 or download them free from the Internet at *www.nist.gov*. Table 3 follows:

TABLE 3 OF § 1065.1010—NIST MATERIALS

Document No. and name	Part 1065 reference
ISONIST Special Publication 811, 1995 Edition, Guide for the Use of the International System of Units (SI), Barry N. Taylor, Physics Laboratory.	1065.20, 1065.1001, 1065.1005
NIST Technical Note 1297, 1994 Edition, Guidelines for Evaluating and Expressing the Uncertainty of NIST Measurement Results, Barry N. Taylor and Chris E. Kuyatt.	1065.1001

(d) *SAE material*. Table 4 of this section lists material from the Society of Automotive Engineering that we have incorporated by reference. The first column lists the number and name of the material. The second column lists the sections of this part where we reference it. Anyone may purchase copies of these materials from the Society of Automotive Engineers, 400 Commonwealth Drive, Warrendale, PA 15096 or *http://www.sae.org*. Table 4 follows:

TABLE 4 OF § 1065.1010—SAE MATERIAL

Document number and name	Part 1065 reference
"Optimization of Flame Ionization Detector for Determination of Hydrocarbon in Diluted Automotive Exhausts," Reschke Glen D., SAE 770141	1065.360

(e) *California Air Resources Board material*. Table 5 of this section lists material from the California Air Resources Board that we have incorporated by reference. The first column lists the number and name of the material. The second column lists the sections of this part where we reference it. Anyone may get copies of these materials from the California Air Resources Board, 9528 Telstar Ave., El Monte, California 91731. Table 5 follows:

TABLE 5 OF § 1065.1010—CALIFORNIA AIR RESOURCES BOARD MATERIALS

Document No. and name	Part 1065 reference
"California Non-Methane Organic Gas Test Procedures," Amended July 30, 2002, Mobile Source Division, California Air Resources Board	1065.805

(f) *Institute of Petroleum material*. Table 6 of this section lists the Institute of Petroleum standard test methods material from the Energy Institute that we have incorporated by reference. The first column lists the number and name of the material. The second column lists the section of this part where we reference it. Anyone may purchase copies of these materials from the Energy Institute, 61 New Cavendish Street , London, W1G 7AR, UK , +44 (0)20 7467 7100 or *www.energyinst.org.uk*. Table 6 follows:

TABLE 6 OF § 1065.1010—INSTITUTE OF PETROLEUM MATERIALS

Document No. and name	Part 1065 reference
IP–470, Determination of aluminum, silicon, vanadium, nickel, iron, calcium, zinc, and sodium in residual fuels by atomic absorption spectrometry	1065.705
IP–500, Determination of the phosphorus content of residual fuels by ultra-violet spectrometry	1065.705
IP–501, Determination of aluminum, silicon, vanadium, nickel, iron, sodium, calcium, zinc and phosphorus in residual fuel oil by ashing, fusion and inductively coupled plasma emission spectrometry	1065.705

[73 FR 37347, June 30, 2008, as amended at 73 FR 59343, Oct. 8, 2008]

PART 1068—GENERAL COMPLIANCE PROVISIONS FOR ENGINE PROGRAMS

Subpart A—Applicability and Miscellaneous Provisions

Sec.
1068.1 Does this part apply to me?
1068.2 How does this part apply for engines and how does it apply for equipment?
1068.5 How must manufacturers apply good engineering judgment?
1068.10 What provisions apply to confidential information?
1068.15 What general provisions apply for EPA decision-making?
1068.20 May EPA enter my facilities for inspections?
1068.25 What information must I give to EPA?
1068.27 May EPA conduct testing with my production engines/equipment?
1068.30 What definitions apply to this part?
1068.31 What provisions apply to nonroad or stationary engines that change their status?
1068.35 What symbols, acronyms, and abbreviations does this part use?
1068.40 What special provisions apply for implementing changes in the regulations?
1068.45 General labeling provisions.
1068.95 What materials does this part reference?

Subpart B—Prohibited Actions and Related Requirements

1068.101 What general actions does this regulation prohibit?
1068.103 What are the provisions related to the duration and applicability of certificates of conformity?
1068.105 What other provisions apply to me specifically if I manufacture equipment needing certified engines?
1068.110 What other provisions apply to engines/equipment in service?
1068.115 When must manufacturers honor emission-related warranty claims?
1068.120 What requirements must I follow to rebuild engines?

1068.125 What happens if I violate the regulations?

Subpart C—Exemptions and Exclusions

1068.201 Does EPA exempt or exclude any engines/equipment from the prohibited acts?
1068.210 What are the provisions for exempting test engines/equipment?
1068.215 What are the provisions for exempting manufacturer-owned engines/equipment?
1068.220 What are the provisions for exempting display engines/equipment?
1068.225 What are the provisions for exempting engines/equipment for national security?
1068.230 What are the provisions for exempting engines/equipment for export?
1068.235 What are the provisions for exempting engines/equipment used solely for competition?
1068.240 What are the provisions for exempting new replacement engines?
1068.245 What temporary provisions address hardship due to unusual circumstances?
1068.250 What are the provisions for extending compliance deadlines for small businesses under hardship?
1068.255 What are the provisions for exempting engines and fuel-system components for hardship for equipment manufacturers and secondary engine manufacturers?
1068.260 What general provisions apply for selling or shipping engines that are not yet in their certified configuration?
1068.261 What provisions apply for selling or shipping certified engines that are not yet in the certified configuration?
1068.262 What are the provisions for temporarily exempting engines for shipment to secondary engine manufacturers?
1068.265 What provisions apply to engines/equipment that are conditionally exempted from certification?

Subpart D—Imports 1068.301 What general provisions apply?

1068.305 How do I get an exemption or exclusion for imported engines/equipment?
1068.310 What are the exclusions for imported engines/equipment?
1068.315 What are the permanent exemptions for imported engines/equipment?
1068.325 What are the temporary exemptions for imported engines/equipment?
1068.335 What are the penalties for violations?
1068.360 What restrictions apply to assigning a model year to imported engines and equipment?

Subpart E—Selective Enforcement Auditing

1068.401 What is a selective enforcement audit?
1068.405 What is in a test order?
1068.410 How must I select and prepare my engines/equipment?
1068.415 How do I test my engines/equipment?
1068.420 How do I know when my engine family fails an SEA?
1068.425 What happens if one of my production-line engines/equipment exceeds the emission standards?
1068.430 What happens if a family fails an SEA?
1068.435 May I sell engines/equipment from a family with a suspended certificate of conformity?
1068.440 How do I ask EPA to reinstate my suspended certificate?
1068.445 When may EPA revoke my certificate under this subpart and how may I sell these engines/equipment again?
1068.450 What records must I send to EPA?
1068.455 What records must I keep?
APPENDIX A TO SUBPART E OF PART 1068—PLANS FOR SELECTIVE ENFORCEMENT AUDITING

Subpart F—Reporting Defects and Recalling Engines/Equipment

1068.501 How do I report emission-related defects?
1068.505 How does the recall program work?
1068.510 How do I prepare and apply my remedial plan?
1068.515 How do I mark or label repaired engines/equipment?
1068.520 How do I notify affected owners?
1068.525 What records must I send to EPA?
1068.530 What records must I keep?
1068.535 How can I do a voluntary recall for emission-related problems?

Subpart G—Hearings

1068.601 What are the procedures for hearings?
APPENDIX I TO PART 1068—EMISSION-RELATED COMPONENTS
APPENDIX II TO PART 1068—EMISSION-RELATED PARAMETERS AND SPECIFICATIONS
APPENDIX III TO PART 1068—HIGH-ALTITUDE COUNTIES

AUTHORITY: 42 U.S.C. 7401–7671q.

SOURCE: 73 59344, Oct. 8, 2008, unless otherwise noted.

Subpart A—Applicability and Miscellaneous Provisions

§ 1068.1 Does this part apply to me?

(a) The provisions of this part apply to everyone with respect to the following engines and to equipment using

the following engines (including owners, operators, parts manufacturers, and persons performing maintenance).

(1) Locomotives we regulate under 40 CFR part 1033.

(2) Land-based nonroad compression-ignition engines we regulate under 40 CFR part 1039.

(3) Stationary compression-ignition engines certified using the provisions of 40 CFR part 1039, as indicated in 40 CFR part 60, subpart IIII.

(4) Marine compression-ignition engines we regulate under 40 CFR part 1042.

(5) Marine spark-ignition engines we regulate under 40 CFR part 1045.

(6) Large nonroad spark-ignition engines we regulate under 40 CFR part 1048.

(7) Stationary spark-ignition engines certified using the provisions of 40 CFR parts 1048 or 1054, as indicated in 40 CFR part 60, subpart JJJJ.

(8) Recreational engines and vehicles we regulate under 40 CFR part 1051 (such as snowmobiles and off-highway motorcycles).

(9) Small nonroad spark-ignition engines we regulate under 40 CFR part 1054.

(b) This part does not apply to any of the following engine or vehicle categories:

(1) Light-duty motor vehicles (see 40 CFR part 86).

(2) Heavy-duty motor vehicles and motor vehicle engines (see 40 CFR part 86).

(3) Aircraft engines (see 40 CFR part 87).

(4) Land-based nonroad compression-ignition engines we regulate under 40 CFR part 89.

(5) Small nonroad spark-ignition engines we regulate under 40 CFR part 90.

(6) Marine spark-ignition engines we regulate under 40 CFR part 91.

(7) Locomotive engines we regulate under 40 CFR part 92.

(8) Marine compression-ignition engines we regulate under 40 CFR parts 89 or 94.

(c) Paragraph (a) of this section identifies the parts of the CFR that define emission standards and other requirements for particular types of engines and equipment. This part 1068 refers to each of these other parts generically as the ''standard-setting part.'' For example, 40 CFR part 1051 is always the standard-setting part for snowmobiles. Follow the provisions of the standard-setting part if they are different than any of the provisions in this part.

(d)(1) The provisions of §§ 1068.30 and 1068.310 apply for stationary spark-ignition engines built on or after January 1, 2004, and for stationary compression-ignition engines built on or after January 1, 2006.

(2) The provisions of §§ 1068.30 and 1068.235 apply for the types of engines/equipment listed in paragraph (a) of this section beginning January 1, 2004, if they are used solely for competition.

[73 59344, Oct. 8, 2008, as amended at 75 FR 23058, Apr. 30, 2010]

EFFECTIVE DATE NOTE: At 76 FR 37977, June 28, 2011, § 1068.1 was amended by revising paragraph (a)(3), effective August 29, 2011. For the convenience of the user, the revised text is set forth as follows:

§ 1068.1 Does this part apply to me?

(a) * * *

(3) Stationary compression-ignition engines certified using the provisions of 40 CFR parts 1039 or 1042, as indicated in 40 CFR part 60, subpart IIII.

* * * * *

§ 1068.2 How does this part apply for engines and how does it apply for equipment?

(a) See the standard-setting part to determine if engine-based and/or equipment-based standards apply. (Note: Some equipment is subject to engine-based standards for exhaust emission and equipment-based standards for evaporative emissions.)

(b) The provisions of this part apply differently depending on whether the engine or equipment is required to be certified.

(1) Subpart A and subpart B of this part apply to engines and equipment, without regard to which is subject to certification requirements in the standard-setting part.

(2) Subparts C, D, and E of this part apply to the engines or to the equipment, whichever is subject to certification requirements in the standard-setting part.

(3) Subpart F of this part generally applies to the engines or to the equipment, whichever is subject to standards under the standard-setting part. However, since subpart F of this part addresses in-use engines and equipment (in which the engine is installed in the equipment), the requirements do not always distinguish between engines and equipment.

(c) For issues related to testing, read the term ''engines/equipment'' to mean engines for engines subject to engine-based testing and equipment for equipment subject to equipment-based testing; otherwise, read the term ''engines/equipment'' to mean engines for sources subject to engine-based standards and equipment for sources subject to equipment-based standards.

(d) When we use the term engines (rather than engines/equipment), read it to mean engines without regard to whether the source is subject to engine-based standards or testing. When we use the term equipment (rather than engines/equipment), read it to mean equipment without regard to whether the source is subject to equipment-based standards or testing. (Note: The definition of ''equipment'' in § 1068.30 includes the engine.)

(e) The terminology convention described in this section is not intended to limit our authority or your obligations under the Clean Air Act.

§ 1068.5 How must manufacturers apply good engineering judgment?

(a) You must use good engineering judgment for decisions related to any requirements under this chapter. This includes your applications for certification, any testing you do to show that your certification, production-line, and in-use engines/equipment comply with requirements that apply to them, and how you select, categorize, determine, and apply these requirements.

(b) If we send you a written request, you must give us a written description of the engineering judgment in question. Respond within 15 working days of receiving our request unless we allow more time.

(c) We may reject your decision if it is not based on good engineering judgment or is otherwise inconsistent with the requirements that apply, based on the following provisions:

(1) We may suspend, revoke, or void a certificate of conformity if we determine you deliberately used incorrect information or overlooked important information, that you did not decide in good faith, or that your decision was not rational.

(2) If we believe a different decision would better reflect good engineering judgment, but none of the provisions of paragraph (c)(1) of this section apply, we will tell you of our concern (and its basis). You will have 30 days to respond to our concerns, or more time if we agree that you need it to generate more information. After considering your information, we will give you a final ruling. If we conclude that you did not use good engineering judgment, we may reject your decision and apply the new ruling to similar situations as soon as possible.

(d) We will tell you in writing of the conclusions we reach under paragraph (c) of this section and explain our reasons for them.

(e) If you disagree with our conclusions, you may file a request for a hearing with the Designated Compliance Officer as described in subpart G of this part. In your request, specify your objections, include data or supporting analysis, and get your authorized representative's signature. If we agree that your request raises a substantial factual issue, we will hold the hearing according to subpart F of this part.

§ 1068.10 What provisions apply to confidential information?

(a) Clearly show what you consider confidential by marking, circling, bracketing, stamping, or some other method.

(b) We will store your confidential information as described in 40 CFR part 2. Also, we will disclose it only as specified in 40 CFR part 2. This applies both to any information you send us and to any information we collect from inspections, audits, or other site visits.

(c) If you send us a second copy without the confidential information, we will assume it contains nothing confidential whenever we need to release information from it.

(d) If you send us information without claiming it is confidential, we may make it available to the public without further notice to you, as described in 40 CFR 2.204.

§ 1068.15 What general provisions apply for EPA decision-making?

(a) The Administrator of the Environmental Protection Agency or any official to whom the Administrator has delegated specific authority may represent the Agency. For more information, ask for a copy of the relevant sections of the EPA Delegations Manual from the Designated Compliance Officer.

(b) The regulations in this part and in the standard-setting part have specific requirements describing how to get EPA approval before you take specific actions. These regulations also allow us to waive some specific requirements. For provisions or flexibilities that we address frequently, we may choose to provide detailed guidance in supplemental compliance instructions for manufacturers. Such instructions will generally state how they relate to the need for pre-approval. Unless we explicitly state so, you should not consider full compliance with the instructions to be equivalent to EPA approval.

§ 1068.20 May EPA enter my facilities for inspections?

(a) We may inspect your testing, manufacturing processes, storage facilities (including port facilities for imported engines and equipment or other relevant facilities), or records, as authorized by the Clean Air Act, to enforce the provisions of this chapter. Inspectors will have authorizing credentials and will limit inspections to reasonable times—usually, normal operating hours.

(b) If we come to inspect, we may or may not have a warrant or court order.

(1) If we do not have a warrant or court order, you may deny us entry.

(2) If we have a warrant or court order, you must allow us to enter the facility and carry out the activities it describes.

(c) We may seek a warrant or court order authorizing an inspection described in this section whether or not we first tried to get your permission to inspect.

(d) We may select any facility to do any of the following:

(1) Inspect and monitor any aspect of engine or equipment manufacturing, assembly, storage, or other procedures, and any facilities where you do them.

(2) Inspect and monitor any aspect of engine or equipment test procedures or test-related activities, including test engine/equipment selection, preparation, service accumulation, emission duty cycles, and maintenance and verification of your test equipment's calibration.

(3) Inspect and copy records or documents related to assembling, storing, selecting, and testing an engine or piece of equipment.

(4) Inspect and photograph any part or aspect of engines or equipment and components you use for assembly.

(e) You must give us reasonable help without charge during an inspection authorized by the Clean Air Act. For example, you may need to help us arrange an inspection with the facility's managers, including clerical support, copying, and translation. You may also need to show us how the facility operates and answer other questions. If we ask in writing to see a particular employee at the inspection, you must ensure that he or she is present (legal counsel may accompany the employee).

(f) If you have facilities in other countries, we expect you to locate them in places where local law does not keep us from inspecting as described in this section. We will not try to inspect if we learn that local law prohibits it, but we may suspend your certificate if we are not allowed to inspect.

§ 1068.25 What information must I give to EPA?

If you are subject to the requirements of this part, we may require you to give us information to evaluate your compliance with any regulations that apply, as authorized by the Clean Air Act. This includes the following things:

(a) You must provide the information we require in this chapter. We may require an authorized representative of your company to approve and sign any submission of information to us, and to

certify that the information is accurate and complete.

(b) You must establish and maintain records, perform tests, make reports and provide additional information that we may reasonably require under section 208 of the Clean Air Act (42 U.S.C. 7542). This also applies to engines/equipment we exempt from emission standards or prohibited acts. Unless we specify otherwise, you must keep required records for eight years.

(c) You are responsible for statements and information in your applications for certification or any other requests or reports. If you provide statements or information to someone for submission to EPA, you are responsible for these statements and information as if you had submitted them to EPA yourself. For example, knowingly submitting false information to someone else for inclusion in an application for certification would be deemed to be a submission of false information to the U.S. government in violation of 18 U.S.C. 1001.

[73 59344, Oct. 8, 2008, as amended at 75 FR 23058, Apr. 30, 2010]

§ 1068.27 May EPA conduct testing with my production engines/equipment?

If we request it, you must make a reasonable number of production-line engines or pieces of production-line equipment available for a reasonable time so we can test or inspect them for compliance with the requirements of this chapter.

§ 1068.30 What definitions apply to this part?

The following definitions apply to this part. The definitions apply to all subparts unless we note otherwise. All undefined terms have the meaning the Clean Air Act gives to them. The definitions follow:

Aftertreatment means relating to a catalytic converter, particulate filter, or any other system, component, or technology mounted downstream of the exhaust valve (or exhaust port) whose design function is to reduce emissions in the engine exhaust before it is exhausted to the environment. Exhaust-gas recirculation (EGR) is not aftertreatment.

Aircraft means any vehicle capable of sustained air travel above treetop heights.

Certificate holder means a manufacturer (including importers) with a currently valid certificate of conformity for at least one family in a given model year.

Clean Air Act means the Clean Air Act, as amended, 42 U.S.C. 7401-7671q.

Date of manufacture means one of the following:

(1) For engines, the date on which the crankshaft is installed in an engine block, with the following exceptions:

(i) For engines produced by secondary engine manufacturers under § 1068.262, date of manufacture means the date the engine is received from the original engine manufacturer. You may assign an earlier date up to 30 days before you received the engine, but not before the crankshaft was installed. You may not assign an earlier date if you cannot demonstrate the date the crankshaft was installed.

(ii) Manufacturers may assign a date of manufacture at a point in the assembly process later than the date otherwise specified under this definition. For example, a manufacturer may use the build date printed on the label or stamped on the engine as the date of manufacture.

(2) For equipment, the date on which the engine is installed, unless otherwise specified in the standard-setting part. Manufacturers may alternatively assign a date of manufacture later in the assembly process.

Days means calendar days, including weekends and holidays.

Defeat device has the meaning given in the standard-setting part.

Designated Compliance Officer means the Manager, Heavy-Duty and Nonroad Engine Group (6405-J), U.S. Environmental Protection Agency, 1200 Pennsylvania Ave., Washington, DC 20460.

Designated Enforcement Officer means the Director, Air Enforcement Division (2242A), U.S. Environmental Protection Agency, 1200 Pennsylvania Ave., NW.,Washington, DC 20460.

Engine means an engine block with an installed crankshaft, or a gas turbine engine. The term engine does not include engine blocks without an installed crankshaft, nor does it include

any assembly of reciprocating engine components that does not include the engine block. (NOTE: For purposes of this definition, any component that is the primary means of converting an engine's energy into usable work is considered a crankshaft, whether or not it is known commercially as a crankshaft.) This includes complete and partially complete engines as follows:

(1) A complete engine is a fully assembled engine in its final configuration. In the case of equipment-based standards, an engine is not considered complete until it is installed in the equipment, even if the engine itself is fully assembled.

(2) A partially complete engine is an engine that is not fully assembled or is not in its final configuration. Except where we specify otherwise in this part or the standard-setting part, partially complete engines are subject to the same standards and requirements as complete engines. The following would be considered examples of partially complete engines:

(i) An engine that is missing certain emission-related components.

(ii) A new engine that was originally assembled as a motor-vehicle engine that will be recalibrated for use as a nonroad engine.

(iii) A new engine that was originally assembled as a land-based engine that will be modified for use as a marine propulsion engine.

(iv) A short block consisting of a crankshaft and other engine components connected to the engine block, but missing the head assembly.

(v) A long block consisting of all engine components except the fuel system and an intake manifold.

(vi) In the case of equipment-based standards, a fully functioning engine that is not yet installed in the equipment. For example, a fully functioning engine that will be installed in an off-highway motorcycle or a locomotive is considered partially complete until it is installed in the equipment.

Engine-based standard means an emission standard expressed in units of grams of pollutant per kilowatt-hour that applies to the engine. Emission standards are either engine-based or equipment-based. Note that engines may be subject to additional standards such as smoke standards.

Engine-based test means an emission test intended to measure emissions in units of grams of pollutant per kilowatt-hour, without regard to whether the standard applies to the engine or equipment. Note that some products that are subject to engine-based testing are subject to additional test requirements such as for smoke.

Engine configuration means a unique combination of engine hardware and calibration within an engine family. Engines within a single engine configuration differ only with respect to normal production variability or factors unrelated to emissions.

Engine/equipment and *engines/equipment* mean engine(s) and/or equipment depending on the context. Specifically these terms mean the following:

(1) Engine(s) when only engine-based standards apply.

(2) Engine(s) for testing issues when engine-based testing applies.

(3) Engine(s) and equipment when both engine-based and equipment-based standards apply.

(4) Equipment when only equipment-based standards apply.

(5) Equipment for testing issues when equipment-based testing applies.

Equipment means one of the following things:

(1) Any vehicle, vessel, or other type of equipment that is subject to the requirements of this part or that uses an engine that is subject to the requirements of this part. An installed engine is part of the equipment.

(2) Fuel-system components that are subject to an equipment-based standard under this chapter. Installed fuel-system components are part of the engine.

Equipment-based standard means an emission standard that applies to the equipment in which an engine is used or to fuel-system components associated with an engine, without regard to how the emissions are measured. If equipment-based standards apply, we require that the equipment or fuel-system components be certified rather than just the engine. Emission standards are either engine-based or equipment-based. For example, recreational vehicles we regulate under 40 CFR part

1051 are subject to equipment-based standards even if emission measurements are based on engine operation alone.

Exempted means relating to engines/equipment that are not required to meet otherwise applicable standards. Exempted engines/equipment must conform to regulatory conditions specified for an exemption in this part 1068 or in the standard-setting part. Exempted engines/equipment are deemed to be ''subject to'' the standards of the standard-setting part even though they are not required to comply with the otherwise applicable requirements. Engines/equipment exempted with respect to a certain tier of standards may be required to comply with an earlier tier of standards as a condition of the exemption; for example, engines exempted with respect to Tier 3 standards may be required to comply with Tier 1 or Tier 2 standards.

Family means engine family or emission family, as applicable under the standard-setting part.

Final deteriorated test result has the meaning given in the standard-setting part. If it is not defined in the standard-setting part, it means the emission level that results from applying all appropriate adjustments (such as deterioration factors) to the measured emission result of the emission-data engine.

Gas turbine engine means anything commercially known as a gas turbine engine or any collection of assembled engine components that is substantially similar to engines commercially known as gas turbine engines. For example, a jet engine is a gas turbine engine. Gas turbine engines may be complete or partially complete. Turbines that rely on external combustion such as steam engines are not gas turbine engines.

Good engineering judgment means judgments made consistent with generally accepted scientific and engineering principles and all available relevant information.

Manufacturer has the meaning given in section 216(1) of the Clean Air Act (42 U.S.C. 7550(1)). In general, this term includes any person who manufactures an engine or piece of equipment for sale in the United States or otherwise introduces a new engine or piece of equipment into U.S. commerce. This includes importers that import new engines or new equipment into the United States for resale. It also includes secondary engine manufacturers.

Model year has the meaning given in the standard-setting part. Unless the standard-setting part specifies otherwise, model year for individual engines/equipment is based on the date of manufacture or a later stage in the assembly process determined by the manufacturer, subject to the limitations described in §§1068.103 and 1068.360. The model year of a new engine that is neither certified nor exempt is deemed to be the calendar year in which it is sold, offered for sale, imported, or delivered or otherwise introduced into U.S. commerce.

Motor vehicle has the meaning given in 40 CFR 85.1703(a).

New has the meaning we give it in the standard-setting part.

Nonroad engine means:

(1) Except as discussed in paragraph (2) of this definition, a nonroad engine is an internal combustion engine that meets any of the following criteria:

(i) It is (or will be) used in or on a piece of equipment that is self-propelled or serves a dual purpose by both propelling itself and performing another function (such as garden tractors, off-highway mobile cranes and bulldozers).

(ii) It is (or will be) used in or on a piece of equipment that is intended to be propelled while performing its function (such as lawnmowers and string trimmers).

(iii) By itself or in or on a piece of equipment, it is portable or transportable, meaning designed to be and capable of being carried or moved from one location to another. Indicia of transportability include, but are not limited to, wheels, skids, carrying handles, dolly, trailer, or platform.

(2) An internal combustion engine is not a nonroad engine if it meets any of the following criteria:

(i) The engine is used to propel a motor vehicle, an aircraft, or equipment used solely for competition.

(ii) The engine is regulated under 40 CFR part 60, (or otherwise regulated by a federal New Source Performance Standard promulgated under section

111 of the Clean Air Act (42 U.S.C. 7411)).

(iii) The engine otherwise included in paragraph (1)(iii) of this definition remains or will remain at a location for more than 12 consecutive months or a shorter period of time for an engine located at a seasonal source. A location is any single site at a building, structure, facility, or installation. Any engine (or engines) that replaces an engine at a location and that is intended to perform the same or similar function as the engine replaced will be included in calculating the consecutive time period. An engine located at a seasonal source is an engine that remains at a seasonal source during the full annual operating period of the seasonal source. A seasonal source is a stationary source that remains in a single location on a permanent basis (i.e., at least two years) and that operates at that single location approximately three months (or more) each year. See § 1068.31 for provisions that apply if the engine is removed from the location.

Operating hours means:

(1) For engine and equipment storage areas or facilities, times during which people other than custodians and security personnel are at work near, and can access, a storage area or facility.

(2) For other areas or facilities, times during which an assembly line operates or any of the following activities occurs:

(i) Testing, maintenance, or service accumulation.

(ii) Production or compilation of records.

(iii) Certification testing.

(iv) Translation of designs from the test stage to the production stage.

(v) Engine or equipment manufacture or assembly.

Piece of equipment means any vehicle, vessel, locomotive, aircraft, or other type of equipment using engines to which this part applies.

Placed into service means used for its intended purpose.

Reasonable technical basis means information that would lead a person familiar with engine design and function to reasonably believe a conclusion related to compliance with the requirements of this part. For example, it would be reasonable to believe that parts performing the same function as the original parts (and to the same degree) would control emissions to the same degree as the original parts.

Relating to as used in this section means relating to something in a specific, direct manner. This expression is used in this section only to define terms as adjectives and not to broaden the meaning of the terms.

Replacement engine means an engine exempted as a replacement engine under § 1068.240.

Revoke means to terminate the certificate or an exemption for a family. If we revoke a certificate or exemption, you must apply for a new certificate or exemption before continuing to introduce the affected engines/equipment into U.S. commerce. This does not apply to engines/equipment you no longer possess.

Secondary engine manufacturer means anyone who produces a new engine by modifying a complete or partially complete engine that was made by a different company. For the purpose of this definition, ''modifying'' does not include making changes that do not remove an engine from its original certified configuration. Secondary engine manufacturing includes, for example, converting automotive engines for use in industrial applications, or land-based engines for use in marine applications. This applies whether it involves a complete or partially complete engine and whether the engine was previously certified to emission standards or not. Manufacturers controlled by the manufacturer of the base engine (or by an entity that also controls the manufacturer of the base engine) are not secondary engine manufacturers; rather, both entities are considered to be one manufacturer for purposes of this part. This definition applies equally to equipment manufacturers that modify engines. Also, equipment manufacturers that certify to equipment-based standards using engines produced by another company are deemed to be secondary engine manufacturers. Companies importing complete engines into the United States

are not secondary engine manufacturers regardless of the procedures and relationships between companies for assembling the engines.

Small business means either of the following:

(1) A company that qualifies under the standard-setting part for special provisions for small businesses or small-volume manufacturers.

(2) A company that qualifies as a small business under the regulations adopted by the Small Business Administration at 13 CFR 121.201 if the standard-setting part does not establish such qualifying criteria.

Standard-setting part means a part in the Code of Federal Regulations that defines emission standards for a particular engine and/or piece of equipment (see §1068.1(a)). For example, the standard-setting part for marine spark-ignition engines is 40 CFR part 1045. For provisions related to evaporative emissions, the standard-setting part may be 40 CFR part 1060, as specified in 40 CFR 1060.1.

Suspend means to temporarily discontinue the certificate or an exemption for a family. If we suspend a certificate, you may not introduce into U.S. commerce engines/equipment from that family unless we reinstate the certificate or approve a new one. If we suspend an exemption, you may not introduce into U.S. commerce engines/equipment that were previously covered by the exemption unless we reinstate the exemption.

Ultimate purchaser means the first person who in good faith purchases a new engine or new piece of equipment for purposes other than resale.

United States means the States, the District of Columbia, the Commonwealth of Puerto Rico, the Commonwealth of the Northern Mariana Islands, Guam, American Samoa, and the U.S. Virgin Islands.

U.S.-directed production volume means the number of engine/equipment units, subject to the requirements of this part, produced by a manufacturer for which the manufacturer has a reasonable assurance that sale was or will be made to ultimate purchasers in the United States.

Void means to invalidate a certificate or an exemption ab initio. If we void a certificate, all the engines/equipment introduced into U.S. commerce under that family for that model year are considered noncompliant, and you are liable for all engines/equipment introduced into U.S. commerce under the certificate and may face civil or criminal penalties or both. This applies equally to all engines/equipment in the family, including engines/equipment introduced into U.S. commerce before we voided the certificate. If we void an exemption, all the engines/equipment introduced into U.S. commerce under that exemption are considered uncertified (or nonconforming), and you are liable for engines/equipment introduced into U.S. commerce under the exemption and may face civil or criminal penalties or both. You may not introduce into U.S. commerce any additional engines/equipment using the voided exemption.

Voluntary emission recall means a repair, adjustment, or modification program voluntarily initiated and conducted by a manufacturer to remedy any emission-related defect for which engine owners have been notified.

We (us, our) means the Administrator of the Environmental Protection Agency and any authorized representatives.

[73 59344, Oct. 8, 2008, as amended at 75 FR 23059, Apr. 30, 2010]

§1068.31 What provisions apply to nonroad or stationary engines that change their status?

This section specifies the provisions that apply when an engine previously used in a nonroad application is subsequently used in an application other than a nonroad application, or when an engine previously used in a stationary application (i.e., an engine that was not used as a nonroad engine and that was not used to propel a motor vehicle, an aircraft, or equipment used solely for competition) is moved.

(a) Changing the status of a stationary engine to be a new nonroad engine as described in paragraph (b) of this section is a violation of §1068.101(a)(1) or (b)(3) unless the engine has been certified to be compliant with all requirements of this chapter that apply to new nonroad engines of the same type (for example, a compression-ignition engine rated at 40 kW)

and model year, and is in its certified configuration. Note that the definitions of ''model year'' in the standard-setting parts generally identify the engine's original date of manufacture as the basis for determining which standards apply if it becomes a nonroad engine after it is no longer new. For example, see 40 CFR 1039.801 and 1048.801.

(b) A stationary engine becomes a new nonroad engine if—

(1) It is used in an application that meets the criteria specified in paragraphs (1)(i) or (ii) in the definition of ''nonroad engine'' in § 1068.30.

(2) It meets the criteria specified in paragraph (1)(iii) of the definition of ''nonroad engine'' in § 1068.30 and is moved so that it fails to meet (or no longer meets) the criteria specified in paragraph (2)(iii) in the definition of ''nonroad engine'' in § 1068.30.

(c) A stationary engine does not become a new nonroad engine if it is moved but continues to meet the criteria specified in paragraph (2)(iii) in the definition of ''nonroad engine'' in § 1068.30 in its new location. For example, a transportable engine that is used in a single specific location for 18 months and is later moved to a second specific location where it will remain for at least 12 months is considered to be a stationary engine in both locations. Note that for engines that are neither portable nor transportable in actual use, the residence-time restrictions in the definition of ''nonroad engine'' generally do not apply.

(d) Changing the status of a nonroad engine to be a new stationary engine as described in paragraph (e) of this section is a violation of § 1068.101(a)(1) unless the engine complies with all the requirements of this chapter for new stationary engines of the same type (for example, a compression-ignition engine rated at 40 kW) and model year. For a new stationary engine that is required to be certified under 40 CFR part 60, the engine must have been certified to be compliant with all the requirements that apply to new stationary engines of the same type and model year, and must be in its certified configuration. Note that the definitions of ''model year'' in the standard-setting parts generally identify the engine's original date of manufacture as the basis for determining which standards apply if it becomes a stationary engine after it is no longer new. For example, *see* 40 CFR 60.4219 and 60.4248.

(e) A nonroad engine ceases to be a nonroad engine and becomes a new stationary engine if—

(1) At any time, it meets the criteria specified in paragraph (2)(iii) in the definition of ''nonroad engine'' in § 1068.30. For example, a portable generator engine ceases to be a nonroad engine if it is used or will be used in a single specific location for 12 months or longer. If we determine that an engine will be or has been used in a single specific location for 12 months or longer, it ceased to be a nonroad engine when it was placed in that location.

(2) It is otherwise regulated by a federal New Source Performance Standard promulgated under section 111 of the Clean Air Act (42 U.S.C. 7411).

(f) A nonroad engine ceases to be a nonroad engine if it is used to propel a motor vehicle, an aircraft, or equipment used solely for competition. See 40 CFR part 86 for requirements applicable to motor vehicles and motor vehicle engines. See 40 CFR part 87 for requirements applicable to aircraft and aircraft engines. See § 1068.235 for requirements applicable to equipment used solely for competition.

[73 59344, Oct. 8, 2008, as amended at 75 FR 23059, Apr. 30, 2010]

§ 1068.35 What symbols, acronyms, and abbreviations does this part use?

The following symbols, acronyms, and abbreviations apply to this part:

$ U.S. dollars.
CFR Code of Federal Regulations.
disp engine displacement.
EPA Environmental Protection Agency.
kW kilowatt.
L/cyl liters per cylinder.
NARA National Archives and Records Administration.
NO_X Oxides of nitrogen.
SAE Society of Automotive Engineers.
SEA selective enforcement audit.
U.S. United States.
U.S.C. United States Code.

§ 1068.40 What special provisions apply for implementing changes in the regulations?

(a) During the 12 months following the effective date of any change in the provisions of this part, you may ask to apply the previously applicable provisions. We will generally approve your request if you can demonstrate that it would be impractical to comply with the new requirements. We may consider the potential for adverse environmental impacts in our decision. Similarly, in unusual circumstances, you may ask for relief under this paragraph (a) from new requirements that apply under the standard-setting part.

(b) During the 60 days following the effective date of any change in the provisions of this part, you may use the previously applicable provisions without request if they meet either of the following criteria:

(1) The new provisions require you to redesign your engines/equipment, modify your engine/equipment labels, or change your production procedures.

(2) The new provisions change what you must include in an application for certification that you submit before the end of this 60-day period. You are not required to amend such applications to comply with the new provisions for that model year; however, this allowance does not apply for later model years, even if you certify an engine family using carryover emission data. This allowance does not affect your obligation to provide information that we request separate from an application for certification.

(c) Prior to the dates listed you may comply with earlier versions of applicable regulations as follows:

(1) Prior to June 1, 2010, you may comply with the provisions of § 1068.240 that were in effect on April 30, 2010.

(2) [Reserved]

[75 FR 23059, Apr. 30, 2010]

§ 1068.45 General labeling provisions.

The provisions of this part and the standard-setting part include a variety of labeling requirements. The following general provisions apply:

(a) *Permanent labels*. Where we specify that you apply a permanent label, you must meet the following requirements unless the standard-setting part includes other specific label requirements:

(1) Attach the label so no one can remove it without destroying or defacing it.

(2) Make sure it is durable and readable for the engine/equipment's entire life.

(3) Secure it to a part of the engine/equipment needed for normal operation and not normally requiring replacement.

(4) Write it in English.

(5) Make the labels readily visible to the average person after all installation and assembly are complete.

(b) *Removable labels*. Where we specify that you apply a removable label, it must meet the following conditions:

(1) You must attach the label in a way that does not allow it to be separated from the engine/equipment without a deliberate effort. Note that for exemptions requiring removable labels, the exemption no longer applies once the label is separated from the engine/equipment.

(2) The label must be durable and readable throughout the period of its intended purpose. This period generally includes all distribution in U.S. commerce during which the exemption applies.

(3) Except as specified in paragraph (c) of this section, the label must be attached directly to the engine/equipment in a visible location. We consider a tag that meets the specified requirements to be an attached label.

(c) *Labels on packaging*. Unless we specify otherwise, where we require engine/equipment labels that may be removable, you may instead label the packaging if the engines/equipment are packaged together as described in this paragraph (c). For example, this may involve packaging engines together by attaching them to a rack, binding them together on a pallet, or enclosing them in a box. The provisions of this paragraph (c) also apply for engines/equipment boxed individually where you do not apply labels directly to the engines/equipment. The following provisions apply if you label the packaging instead of labeling engines/equipment individually:

(1) You may use the provisions of this paragraph (c) only if all the engines/equipment packaged together need the same label.

(2) You must place the label on the package in a readily visible location. This may require labeling the package in multiple locations.

(3) You must package the engines/equipment such that the labels will not be separated from the engines/equipment or otherwise become unreadable throughout the period that the label applies. For example, labels required for shipping engines to a secondary engine manufacturer under § 1068.262 must remain attached and readable until they reach the secondary engine manufacturer. Similarly, removable labels specified in § 1068.240 for replacement engines must remain attached and readable until they reach the point of final installation.

(4) You are in violation of § 1068.101(a)(1) if such engines/equipment are removed from the package or are otherwise separated from the label before reaching the point at which the label is no longer needed.

(d) *Temporary consumer labels*. Where we specify that you apply temporary consumer labels (including tags), each label must meet the following conditions:

(1) You must attach the label in a way that does not allow it to be separated from the engine/equipment without a deliberate effort.

(2) The label must be sufficiently durable to be readable until it reaches the ultimate purchaser.

(3) The label must be attached directly to the engine/equipment in a visible location.

(e) *Prohibitions against removing labels*. Removing permanent labels may be a violation of § 1068.101(b)(7). Removing temporary or removable labels prematurely may also be a violation of § 1068.101(b)(7).

(f) *Identifying emission control systems*. If the standard-setting part specifies that you use standardized terms and abbreviations to identify emission control systems, use terms and abbreviations consistent with SAE J1930 (incorporated by reference in § 1068.95).

[73 59344, Oct. 8, 2008, as amended at 75 FR 23059, Apr. 30, 2010]

§ 1068.95 What materials does this part reference?

Documents listed in this section have been incorporated by reference into this part. The Director of the Federal Register approved the incorporation by reference as prescribed in 5 U.S.C. 552(a) and 1 CFR part 51. Anyone may inspect copies at the U.S. EPA, Air and Radiation Docket and Information Center, 1301 Constitution Ave., NW., Room B102, EPA West Building, Washington, DC 20460 or at the National Archives and Records Administration (NARA). For information on the availability of this material at NARA, call 202–741–6030, or go to: *http://www.archives.gov/federal_register/code_of_federal_regulations/ibr_locations.html*.

(a) *SAE material*. Table 1 to this section lists material from the Society of Automotive Engineers that we have incorporated by reference. The first column lists the number and name of the material. The second column lists the sections of this part where we reference it. Anyone may purchase copies of these materials from the Society of Automotive Engineers, 400 Commonwealth Drive, Warrendale, PA 15096 or *http://www.sae.org*. Table 1 follows:

TABLE 1 TO § 1068.95—SAE MATERIALS

Document number and name	Part 1068 reference
SAE J1930, Electrical/Electronic Systems Diagnostic Terms, Definitions, Abbreviations, and Acronyms, revised April 2002	1068.95

(b) [Reserved]

Subpart B—Prohibited Actions and Related Requirements

§ 1068.101 What general actions does this regulation prohibit?

This section specifies actions that are prohibited and the maximum civil penalties that we can assess for each violation in accordance with 42 U.S.C. 7522 and 7524. The maximum penalty values listed in paragraphs (a) and (b) of this section apply as of January 12, 2009. As described in paragraph (h) of this section, these maximum penalty limits are different for earlier violations and they may be adjusted as set forth in 40 CFR part 19.

(a) The following prohibitions and requirements apply to manufacturers of new engines, manufacturers of equipment containing these engines, and manufacturers of new equipment, except as described in subparts C and D of this part:

(1) *Introduction into commerce.* You may not sell, offer for sale, or introduce or deliver into commerce in the United States or import into the United States any new engine/equipment after emission standards take effect for the engine/equipment, unless it is covered by a valid certificate of conformity for its model year and has the required label or tag. You also may not take any of the actions listed in the previous sentence with respect to any equipment containing an engine subject to this part's provisions unless the engine is covered by a valid certificate of conformity for its model year and has the required engine label or tag. We may assess a civil penalty up to $37,500 for each engine or piece of equipment in violation.

(i) For purposes of this paragraph (a)(1), a valid certificate of conformity is one that applies for the same model year as the model year of the equipment (except as allowed by § 1068.105(a)), covers the appropriate category of engines/equipment (such as locomotive or Marine SI), and conforms to all requirements specified for equipment in the standard-setting part. Engines/equipment are considered not covered by a certificate unless they are in a configuration described in the application for certification.

(ii) The requirements of this paragraph (a)(1) also cover new engines you produce to replace an older engine in a piece of equipment, unless the engine qualifies for the replacement-engine exemption in § 1068.240.

(iii) For engines used in equipment subject to equipment-based standards, you may not sell, offer for sale, or introduce or deliver into commerce in the United States or import into the United States any new engine unless it is covered by a valid certificate of conformity for its model year and has the required label or tag. *See* the standard-setting part for more information about how this prohibition applies.

(2) *Reporting and recordkeeping.* This chapter requires you to record certain types of information to show that you meet our standards. You must comply with these requirements to make and maintain required records (including those described in § 1068.501). You may not deny us access to your records or the ability to copy your records if we have the authority to see or copy them. Also, you must give us complete and accurate reports and information without delay as required under this chapter. Failure to comply with the requirements of this paragraph is prohibited. We may assess a civil penalty up to $37,500 for each day you are in violation. In addition, knowingly submitting false information is a violation of 18 U.S.C. 1001, which may involve criminal penalties and up to five years imprisonment.

(3) *Testing and access to facilities.* You may not keep us from entering your facility to test engines/equipment or inspect if we are authorized to do so. Also, you must perform the tests we require (or have the tests done for you). Failure to perform this testing is prohibited. We may assess a civil penalty up to $37,500 for each day you are in violation.

(b) The following prohibitions apply to everyone with respect to the engines and equipment to which this part applies:

(1) *Tampering.* You may not remove or render inoperative any device or element of design installed on or in engines/equipment in compliance with

the regulations prior to its sale and delivery to the ultimate purchaser. You also may not knowingly remove or render inoperative any such device or element of design after such sale and delivery to the ultimate purchaser. This includes, for example, operating an engine without a supply of appropriate quality urea if the emissions control system relies on urea to reduce NOx emissions or the use of incorrect fuel or engine oil that renders the emissions control system inoperative. Section 1068.120 describes how this applies to rebuilding engines. *See* the standard-setting part, which may include additional provisions regarding actions prohibited by this requirement. For a manufacturer or dealer, we may assess a civil penalty up to $37,500 for each engine or piece of equipment in violation. For anyone else, we may assess a civil penalty up to $3,750 for each day an engine or piece of equipment is operated in violation. This prohibition does not apply in any of the following situations:

(i) You need to repair the engine/equipment and you restore it to proper functioning when the repair is complete.

(ii) You need to modify the engine/equipment to respond to a temporary emergency and you restore it to proper functioning as soon as possible.

(iii) You modify new engines/equipment that another manufacturer has already certified to meet emission standards and recertify them under your own family. In this case you must tell the original manufacturer not to include the modified engines/equipment in the original family.

(2) *Defeat devices*. You may not knowingly manufacture, sell, offer to sell, or install, any part that bypasses, impairs, defeats, or disables the control of emissions of any regulated pollutant, except as explicitly allowed by the standard-setting part. We may assess a civil penalty up to $3,750 for each part in violation.

(3) *Stationary engines*. For an engine that is excluded from any requirements of this chapter because it is a stationary engine, you may not move it or install it in any mobile equipment except as allowed by the provisions of this chapter. You may not circumvent or attempt to circumvent the residence-time requirements of paragraph (2)(iii) of the nonroad engine definition in § 1068.30. Anyone violating this paragraph (b)(3) is deemed to be a manufacturer in violation of paragraph (a)(1) of this section. We may assess a civil penalty up to $37,500 for each engine or piece of equipment in violation.

(4) *Competition engines/equipment*. For uncertified engines/equipment that are excluded or exempted from any requirements of this chapter because they are to be used solely for competition, you may not use any of them in a manner that is inconsistent with use solely for competition. Anyone violating this paragraph (b)(4) is deemed to be a manufacturer in violation of paragraph (a)(1) of this section. We may assess a civil penalty up to $37,500 for each engine or piece of equipment in violation.

(5) *Importation*. You may not import an uncertified engine or piece of equipment if it is defined to be new in the standard-setting part with a model year for which emission standards applied. Anyone violating this paragraph (b)(5) is deemed to be a manufacturer in violation of paragraph (a)(1) of this section. We may assess a civil penalty up to $37,500 for each engine or piece of equipment in violation. Note the following:

(i) The definition of new is broad for imported engines/equipment; uncertified engines and equipment (including used engines and equipment) are generally considered to be new when imported.

(ii) Used engines/equipment that were originally manufactured before applicable EPA standards were in effect are generally not subject to emission standards.

(6) *Warranty, recall, and maintenance instructions*. You must meet your obligation to honor your emission-related warranty under § 1068.115, including any commitments you identify in your application for certification. You must also fulfill all applicable requirements under subpart F of this part related to emission-related defects and recalls. You must also provide emission-related

installation and maintenance instructions as described in the standard-setting part. Failure to meet these obligations is prohibited. Also, except as specifically provided by regulation, you are prohibited from directly or indirectly communicating to the ultimate purchaser or a later purchaser that the emission-related warranty is valid only if the owner has service performed at authorized facilities or only if the owner uses authorized parts, components, or systems. We may assess a civil penalty up to $37,500 for each engine or piece of equipment in violation.

(7) *Labeling.* (i) You may not remove or alter an emission control information label or other required permanent label except as specified in this paragraph (b)(7) or otherwise allowed by this chapter. Removing or altering an emission control information label is a violation of paragraph (b)(1) of this section. However, it is not a violation to remove a label in the following circumstances:

(A) The engine is destroyed, is permanently disassembled, or otherwise loses its identity such that the original title to the engine is no longer valid.

(B) The regulations specifically direct you to remove the label. For example, *see* § 1068.235.

(C) The part on which the label is mounted needs to be replaced. In this case, you must have a replacement part with a duplicate of the original label installed by the certifying manufacturer or an authorized agent, except that the replacement label may omit the date of manufacture if applicable. We generally require labels to be permanently attached to parts that will not normally be replaced, but this provision allows for replacements in unusual circumstances, such as damage in a collision or other accident.

(D) The original label is incorrect, provided that it is replaced with the correct label from the certifying manufacturer or an authorized agent. This allowance to replace incorrect labels does not affect whether the application of an incorrect original label is a violation.

(ii) Removing or altering a temporary or removable label contrary to the provisions of this paragraph (b)(7)(ii) is a violation of paragraph (b)(1) of this section.

(A) For labels identifying temporary exemptions, you may not remove or alter the label while the engine/equipment is in an exempt status. The exemption is automatically revoked for each engine/equipment for which the label has been removed.

(B) For temporary or removable consumer information labels, only the ultimate purchaser may remove the label.

(iii) You may not apply a false emission control information label. You also may not manufacture, sell, or offer to sell false labels. The application, manufacture, sale, or offer for sale of false labels is a violation of this section (such as paragraph (a)(1) or (b)(2) of this section). Note that applying an otherwise valid emission control information label to the wrong engine is considered to be applying a false label.

(c) If you cause someone to commit a prohibited act in paragraph (a) or (b) of this section, you are in violation of that prohibition.

(d) Exemptions from these prohibitions are described in subparts C and D of this part and in the standard-setting part.

(e) The standard-setting parts describe more requirements and prohibitions that apply to manufacturers (including importers) and others under this chapter.

(f) The specification of prohibitions and penalties in this part does not limit the prohibitions and penalties described in the Clean Air Act. Additionally, a single act may trigger multiple violations under this section and the Act. We may pursue all available administrative, civil, or criminal remedies for those violations even if the regulation references only a single prohibited act in this section.

(g) [Reserved]

(h) The maximum penalty values listed in paragraphs (a) and (b) of this section apply as of January 12, 2009. Maximum penalty values for earlier violations are published in 40 CFR part 19. Maximum penalty limits may be adjusted after January 12, 2009 based on the Consumer Price Index. The specific regulatory provisions for changing the

maximum penalties, published in 40 CFR part 19, reference the applicable U.S. Code citation on which the prohibited action is based. The following table is shown here for informational purposes:

TABLE 1 OF § 1068.101—LEGAL CITATION FOR SPECIFIC PROHIBITIONS FOR DETERMINING MAXIMUM PENALTY AMOUNTS

Part 1068 regulatory citation of prohibited action	General description of prohibition	U.S. Code citation for Clean Air Act authority
§ 1068.101(a)(1)	Introduction into U.S. commerce of an uncertified source.	42 U.S.C. 7522(a)(1) and (a)(4).
§ 1068.101(a)(2)	Failure to provide information	42 U.S.C. 7522(a)(2).
§ 1068.101(a)(3)	Denying access to facilities	42 U.S.C. 7522(a)(2).
§ 1068.101(b)(1)	Tampering with emission controls by a manufacturer or dealer.	42 U.S.C. 7522(a)(3).
	Tampering with emission controls by someone other than a manufacturer or dealer.	
§ 1068.101(b)(2)	Sale or use of a defeat device	42 U.S.C. 7522(a)(3).
§ 1068.101(b)(3)	Mobile use of a stationary engine	42 U.S.C. 7522(a)(1) and (a)(4).
§ 1068.101(b)(4)	Noncompetitive use of uncertified engines/equipment that is exempted for competition.	42 U.S.C. 7522(a)(1) and (a)(4).
§ 1068.101(b)(5)	Importation of an uncertified source	42 U.S.C. 7522(a)(1) and (a)(4).
§ 1068.101(b)(6)	Recall and warranty	42 U.S.C. 7522(a)(4).
§ 1068.101(b)(7)	Removing labels	42 U.S.C. 7522(a)(3).

75 FR 23059, Apr. 30, 2010]

§ 1068.103 What are the provisions related to the duration and applicability of certificates of conformity?

(a) Engines/equipment covered by a certificate of conformity are limited to those that are produced during the period specified in the certificate and conform to the specifications described in the certificate and the associated application for certification. For the purposes of this paragraph (a), ''specifications'' includes any conditions or limitations identified by the manufacturer or EPA. For example, if the application for certification specifies certain engine configurations, the certificate does not cover any configurations that are not specified. We may ignore any information provided in the application that we determine is not relevant to a demonstration of compliance with applicable regulations, such as your projected production volumes in many cases.

(b) Unless the standard-setting part specifies otherwise, determine the production period corresponding to each certificate of conformity as specified in this paragraph (b). In general, the production period is the manufacturer's annual production period identified as a model year.

(1) For engines/equipment subject to emission standards based on model years, the first day of the annual production period can be no earlier than January 2 of the calendar year preceding the year for which the model year is named, or the earliest date of manufacture for any engine/equipment in the engine family, whichever is later. The last day of the annual production period can be no later than December 31 of the calendar year for which the model year is named or the latest date of manufacture for any engine/equipment in the engine family, whichever is sooner.

(2) For fuel-system components certified to evaporative emission standards based on production periods rather than model years, the production period is either the calendar year or a longer period we specify consistent with the manufacturer's normal production practices.

(c) A certificate of conformity will not cover engines/equipment you produce with a date of manufacture earlier than the date you submit the application for certification for the family. You may start to produce engines/equipment after you submit an application for certification and before the effective date of a certificate of conformity, subject to the following conditions:

(1) The engines/equipment must conform in all material respects to the engines/equipment described in your application. Note that if we require you

to modify your application, you must ensure that all engines/equipment conform to the specifications of the modified application.

(2) The engines/equipment may not be sold, offered for sale, introduced into commerce, or delivered for introduction into U.S. commerce before the effective date of the certificate of conformity.

(3) You must notify us in your application for certification that you plan to use the provisions of this paragraph (c) and when you intend to start production. If the standard-setting part specifies mandatory testing for production-line engines, you must start testing as directed in the standard-setting part based on your actual start of production, even if that occurs before we approve your certification. You must also agree to give us full opportunity to inspect and/or test the engines/equipment during and after production. For example, we must have the opportunity to specify selective enforcement audits as allowed by the standard-setting part and the Clean Air Act as if the engines/equipment were produced after the effective date of the certificate.

(4) See §1068.262 for special provisions that apply for secondary engine manufacturers receiving shipment of partially complete engines before the effective date of a certificate.

(d) Engines/equipment with a date of manufacture after December 31 of the calendar year for which a model year is named are not covered by the certificate of conformity for that model year. You must submit an application for a new certificate of conformity demonstrating compliance with applicable standards even if the engines/equipment are identical to those built before December 31.

(e) The flexible approach to naming the annual production period described in paragraph (b)(1) of this section is intended to allow you to introduce new products at any point during the year. This is based on the expectation that production periods generally run on consistent schedules from year to year. You may not use this flexibility to arrange your production periods such that you can avoid annual certification.

(f) An engine is generally assigned a model year based on its date of manufacture, which is typically based on the date the crankshaft is installed in the engine (see §1068.30). You may not circumvent the provisions of §1068.101(a)(1) by stockpiling engines with a date of manufacture before new or changed emission standards take effect by deviating from your normal production and inventory practices. (For purposes of this paragraph (f), normal production and inventory practices means those practices you typically use for similar families in years in which emission standards do not change. We may require you to provide us routine production and inventory records that document your normal practices for the preceding eight years.) For most engines you should plan to complete the assembly of an engine of a given model year within the first week after the end of the model year if new emission standards start to apply in that model year. For special circumstances it may be appropriate for your normal business practice to involve more time. For engines with per-cylinder displacement below 2.5 liters, we would consider it to be a violation to complete the assembly of an engine of a given model year more than 30 days after the end of the model year for that engine family if new emission standards start to apply in that year. For example, in the case where new standards apply in the 2010 model year, and your normal production period is based on the calendar year, you must complete the assembly of all your 2009 model year engines before January 31, 2010, or an earlier date consistent with your normal production and inventory practices. For engines with per-cylinder displacement at or above 2.5 liters, this time may not exceed 60 days. Note that for the purposes of this paragraph (f), an engine shipped under §1068.261 is deemed to be a complete engine. Note also that §1068.245 allows flexibility for additional time in unusual circumstances. Note finally that disassembly of complete engines and reassembly (such as for shipment) does not affect the determination of model year; the provisions of this paragraph

(f) apply based on the date on which initial assembly is complete.

[73 59344, Oct. 8, 2008, as amended at 75 FR 23061, Apr. 30, 2010]

§ 1068.105 What other provisions apply to me specifically if I manufacture equipment needing certified engines?

This section describes general provisions that apply to equipment manufacturers for sources subject to engine-based standards. See the standard-setting part for any requirements that apply for certain applications. See § 1068.101 for penalties associated with violations under this section and for other prohibitions related to your equipment.

(a) *Transitioning to new engine-based standards.* If new engine-based emission standards apply in a given model year, your equipment in that calendar year must have engines that are certified to the new standards, except that you may continue to use up normal inventories of earlier engines that were built before the date of the new or changed standards. For purposes of this paragraph (a), normal inventory applies for engines you possess and engines from your engine supplier's inventory. (NOTE: this paragraph (a) does not apply in the case of new remanufacturing standards.) For example, if your normal inventory practice is to keep on hand a one-month supply of engines based on your upcoming production schedules, and a new tier of standards starts to apply for the 2015 model year, you may order engines consistent with your normal inventory requirements late in the engine manufacturer's 2014 model year and install those engines in your equipment, regardless of the date of installation. Also, if your model year starts before the end of the calendar year preceding new standards, you may use engines from the previous model year for those units you produce before January 1 of the year that new standards apply. If emission standards for the engine do not change in a given model year, you may continue to install engines from the previous model year without restriction (or any earlier model year for which the same standards apply). You may not circumvent the provisions of § 1068.101(a)(1) by stockpiling engines that were built before new or changed standards take effect. Similarly, you may not circumvent the provisions of § 1068.101(a)(1) by knowingly installing engines that were stockpiled by engine suppliers in violation of § 1068.103(f). Note that this allowance does not apply for equipment subject to equipment-based standards. *See* 40 CFR 1060.601 for similar provisions that apply for equipment subject to evaporative emission standards.

(b) *Installing engines or certified components.* The provisions in § 1068.101(a)(1) generally prohibit you from introducing into U.S. commerce any new equipment that includes engines not covered by a certificate of conformity. In addition, you must follow the engine manufacturer's emission-related installation instructions. For example, you may need to constrain where you place an exhaust aftertreatment device or integrate into your equipment models a device for sending visual or audible signals to the operator. Similarly, you must follow the emission-related installation instructions from the manufacturer of a component that has been certified for controlling evaporative emissions under 40 CFR part 1060. Not meeting the manufacturer's emission-related installation instructions is a violation of one or more of the prohibitions of § 1068.101. See § 1068.261 for special provisions that apply when the engine manufacturer delegates final assembly of emission controls to you.

(c) *Attaching a duplicate label.* If you obscure the engine's label, you must do four things to avoid violating § 1068.101(a)(1):

(1) Send a request for duplicate labels in writing on your company's letterhead to the engine manufacturer. Include the following information in your request:

(i) Identify the type of equipment and the specific engine and equipment models needing duplicate labels.

(ii) Identify the family (from the original engine label).

(iii) State the reason that you need a duplicate label for each equipment model.

(iv) Identify the number of duplicate labels you will need.

(2) Permanently attach the duplicate label to your equipment by securing it to a part needed for normal operation and not normally requiring replacement. Make sure an average person can easily read it.

(3) Destroy any unused duplicate labels if you find that you will not need them.

(4) Keep the following records for at least eight years after the end of the model year identified on the engine label:

(i) Keep a copy of your written request.

(ii) Keep drawings or descriptions that show how you apply the duplicate labels to your equipment.

(iii) Maintain a count of those duplicate labels you use and those you destroy.

]73 59344, Oct. 8, 2008, as amended at 75 FR 23062, Apr. 30, 2010]

§ 1068.110 What other provisions apply to engines/equipment in service?

(a) *Aftermarket parts and service.* As the certifying manufacturer, you may not require anyone to use your parts or service to maintain or repair an engine or piece of equipment, unless we approve this in your application for certification. It is a violation of the Clean Air Act for anyone to manufacture any part if one of its main effects is to reduce the effectiveness of the emission controls. See § 1068.101(b)(2).

(b) *Certifying aftermarket parts.* As the manufacturer or rebuilder of an aftermarket engine or equipment part, you may—but are not required to—certify according to 40 CFR part 85, subpart V, that using the part will not cause engines/equipment to fail to meet emission standards. Whether you certify or not, you must keep any information showing how your parts or service affect emissions.

(c) *Compliance with standards.* We may test engines and equipment to investigate compliance with emission standards and other requirements. We may also require the manufacturer to do this testing.

(d) *Defeat devices.* We may test engines and equipment to investigate potential defeat devices. We may also require the manufacturer to do this testing. If we choose to investigate one of your designs, we may require you to show us that it does not have a defeat device. To do this, you may have to share with us information regarding test programs, engineering evaluations, design specifications, calibrations, on-board computer algorithms, and design strategies. It is a violation of the Clean Air Act for anyone to make, install or use defeat devices. See § 1068.101(b)(2) and the standard-setting part.

(e) *Warranty and maintenance.* Owners are responsible for properly maintaining their engines/equipment; however, owners may make warranty claims against the manufacturer for all expenses related to diagnosing and repairing or replacing emission-related parts, as described in § 1068.115. Manufacturers may ask to limit diagnosis and repair to authorized service facilities, provided this does not limit their ability to meet their warranty obligations under § 1068.115. The warranty period begins when the equipment is first placed into service. See the standard-setting part for specific requirements. It is a violation of the Clean Air Act for anyone to disable emission controls; see § 1068.101(b)(1) and the standard-setting part.

§ 1068.115 When must manufacturers honor emission-related warranty claims?

Section 207(a) of the Clean Air Act (42 U.S.C. 7541(a)) requires certifying manufacturers to warrant to purchasers that their engines/equipment are designed, built, and equipped to conform at the time of sale to the applicable regulations for their full useful life, including a warranty that the engines/equipment are free from defects in materials and workmanship that would cause any engine/equipment to fail to conform to the applicable regulations during the specified warranty period. This section codifies the warranty requirements of section 207(a) without intending to limit these requirements.

(a) As a certifying manufacturer, you may deny warranty claims only for failures that have been caused by the owner's or operator's improper maintenance or use, by accidents for which you have no responsibility, or by acts of God. For example, you would not

need to honor warranty claims for failures that have been directly caused by the operator's abuse of the engine/equipment or the operator's use of the engine/equipment in a manner for which it was not designed and are not attributable to you in any way.

(b) As a certifying manufacturer, you may not deny emission-related warranty claims based on any of the following:

(1) Maintenance or other service you or your authorized facilities performed.

(2) Engine/equipment repair work that an operator performed to correct an unsafe, emergency condition attributable to you as long as the operator tries to restore the engine/equipment to its proper configuration as soon as possible.

(3) Any action or inaction by the operator unrelated to the warranty claim.

(4) Maintenance that was performed more frequently than you specify.

(5) Anything that is your fault or responsibility.

(6) The use of any fuel that is commonly available where the equipment operates unless your written maintenance instructions state that this fuel would harm the equipment's emission control system and operators can readily find the proper fuel.

§ 1068.120 What requirements must I follow to rebuild engines?

(a) This section describes the steps to take when rebuilding engines to avoid violating the tampering prohibition in § 1068.101(b)(1). These requirements apply to anyone rebuilding an engine subject to this part, but the recordkeeping requirements in paragraphs (j) and (k) of this section apply only to businesses. For maintenance or service that is not rebuilding, including any maintenance related to evaporative emission controls, you may not make changes that might increase emissions of any regulated pollutant, but you do not need to keep any records.

(b) The term ''rebuilding'' refers to a rebuild of an engine or engine system, including a major overhaul in which you replace the engine's pistons or power assemblies or make other changes that significantly increase the service life of the engine. It also includes replacing or rebuilding an engine's turbocharger or aftercooler or the engine's systems for fuel metering or electronic control so that it significantly increases the service life of the engine. For these provisions, rebuilding may or may not involve removing the engine from the equipment. Rebuilding does not normally include the following:

(1) Scheduled emission-related maintenance that the standard-setting part allows during the useful life period (such as replacing fuel injectors).

(2) Unscheduled maintenance that occurs commonly within the useful life period. For example, replacing a water pump is not rebuilding an engine.

(c) [Reserved]

(d) If you rebuild an engine or engine system, you must have a reasonable technical basis for knowing that the rebuilt engine's emission control system performs as well as, or better than, it performs in its certified configuration. Identify the model year of the resulting engine configuration. You have a reasonable basis if you meet two main conditions:

(1) Install parts—new, used, or rebuilt—so a person familiar with engine design and function would reasonably believe that the engine with those parts will control emissions of all pollutants at least to the same degree as with the original parts. For example, it would be reasonable to believe that parts performing the same function as the original parts (and to the same degree) would control emissions to the same degree as the original parts.

(2) Adjust parameters or change design elements only according to the original engine manufacturer's instructions. Or, if you differ from these instructions, you must have data or some other technical basis to show you should not expect in-use emissions to increase.

(e) If the rebuilt engine remains installed or is reinstalled in the same piece of equipment, you must rebuild it to the original configuration, except as allowed by this paragraph (e). You may rebuild it to a different certified configuration of the same or later model year. You may also rebuild it to a certified configuration from an earlier

model year as long as the earlier configuration is as clean or cleaner than the original configuration. For purposes of this paragraph (e), ''as clean or cleaner'' means one of the following:

(1) For engines not certified with a Family Emission Limit for calculating credits for a particular pollutant, this means that the same emission standard applied for both model years. This includes supplemental standards such as Not-to-Exceed standards.

(2) For engines certified with a Family Emission Limit for a particular pollutant, this means that the configuration to which the engine is being rebuilt has a Family Emission Limit for that pollutant that is at or below the standard that applied to the engine originally, and is at or below the original Family Emission Limit.

(f) A rebuilt engine may replace another certified engine in a piece of equipment only if the engine was rebuilt to a certified configuration meeting equivalent or more stringent emission standards. Note that a certified configuration would generally include more than one model year. A rebuilt engine being installed that is from the same model year or a newer model year than the engine being replaced meets this requirement. The following examples illustrate the provisions of this paragraph (f):

(1) In most cases, you may use a rebuilt Tier 2 engine to replace a Tier 1 engine or another Tier 2 engine.

(2) You may use a rebuilt Tier 1 engine to replace a Tier 2 engine if the two engines differ only with respect to model year or other characteristics unrelated to emissions since such engines would be considered to be in the same configuration. This may occur if the Tier 1 engine had emission levels below the Tier 2 standards or if the Tier 2 engine was certified with a Family Emission Limit for calculating emission credits.

(3) You may use a rebuilt engine that originally met the Tier 1 standards without certification, as provided under 40 CFR 1068.265, to replace a certified Tier 1 engine. This may occur for engines produced under a Transition Program for Equipment Manufacturers such as that described in 40 CFR 1039.625.

(4) You may never replace a certified engine with an engine rebuilt to a configuration that does not meet EPA emission standards. Note that a configuration is considered to meet EPA emission standards if it was previously certified or was otherwise shown to meet emission standards (see § 1068.265).

(g) Do not erase or reset emission-related codes or signals from onboard monitoring systems without diagnosing and responding appropriately to any diagnostic codes. This requirement applies regardless of the manufacturer's reason for installing the monitoring system and regardless of its form or interface. Clear any codes from diagnostic systems when you return the rebuilt engine to service. Do not disable a diagnostic signal without addressing its cause.

(h) When you rebuild an engine, check, clean, adjust, repair, or replace all emission-related components (listed in Appendix I of this part) as needed according to the original manufacturer's recommended practice. In particular, replace oxygen sensors, replace the catalyst if there is evidence of malfunction, clean gaseous fuel-system components, and replace fuel injectors (if applicable), unless you have a reasonable technical basis for believing any of these components do not need replacement.

(i) If you are installing an engine that someone else has rebuilt, check all emission-related components listed in Appendix I of this part as needed according to the original manufacturer's recommended practice.

(j) Keep at least the following records for all engines except spark-ignition engines with total displacement below 225 cc:

(1) Identify the hours of operation (or mileage, as appropriate) at the time of rebuild. These may be noted as approximate values if the engine has no hour meter (or odometer).

(2) Identify the work done on the engine or any emission-related control components, including a listing of parts and components you used.

(3) Describe any engine parameter adjustments.

(4) Identify any emission-related codes or signals you responded to and reset.

(k) You must show us or send us your records if we ask for them. Keep records for at least two years after rebuilding an engine. Keep them in any format that allows us to readily review them.

(1) You do not need to keep information that is not reasonably available through normal business practices. We do not expect you to have information that you cannot reasonably access.

(2) You do not need to keep records of what other companies do.

(3) You may keep records based on families rather than individual engines if that is the way you normally do business.

[73 59344, Oct. 8, 2008, as amended at 75 FR 23062, Apr. 30, 2010]

§ 1068.125 What happens if I violate the regulations?

(a) *Civil penalties and injunctions.* We may bring a civil action to assess and recover civil penalties and/or enjoin and restrain violations in the United States District Court for the district where you allegedly violated a requirement, or the district where you live or have your main place of business. Actions to assess civil penalties or restrain violations of § 1068.101 must be brought by and in the name of the United States. The selected court has jurisdiction to restrain violations and assess civil penalties.

(1) To determine the amount of a civil penalty and reach a just conclusion, the court considers these factors:

(i) The seriousness of your violation.

(ii) How much you benefited or saved because of the violation.

(iii) The size of your business.

(iv) Your history of compliance with Title II of the Clean Air Act (42 U.S.C. 7401–7590).

(v) What you did to remedy the violation.

(vi) How the penalty will affect your ability to continue in business.

(vii) Such other matters as justice may require.

(2) Subpoenas for witnesses who must attend a district court in any district may apply to any other district.

(b) *Administrative penalties.* Instead of bringing a civil action, we may assess administrative penalties if the total is less than $295,000 against you individually. This maximum penalty may be greater if the Administrator and the Attorney General jointly determine that a greater administrative penalty assessment is appropriate, or if the limit is adjusted under 40 CFR part 19. No court may review this determination. Before we assess an administrative penalty, you may ask for a hearing (subject to 40 CFR part 22). The Administrator may compromise or remit, with or without conditions, any administrative penalty that may be imposed under this section.

(1) To determine the amount of an administrative penalty, we will consider the factors described in paragraph (a)(1) of this section.

(2) An administrative order we issue under this paragraph (b) becomes final 30 days after we issue it unless you ask for judicial review by that time (see paragraph (c) of this section). You may ask for review by any of the district courts listed in paragraph (a) of this section. Send the Administrator a copy of the filing by certified mail.

(3) We will not pursue an administrative penalty for a particular violation if either of the following two conditions is true:

(i) We are separately prosecuting the violation under this subpart.

(ii) We have issued a final order for a violation, no longer subject to judicial review, for which you have already paid a penalty.

(c) *Judicial review.* If you ask a court to review a civil or administrative penalty, we will file in the appropriate court within 30 days of your request a certified copy or certified index of the record on which the court or the Administrator issued the order.

(1) The judge may set aside or remand any order issued under this section only if one of the following is true:

(i) Substantial evidence does not exist in the record, taken as a whole, to support finding a violation.

(ii) The Administrator's assessment of the penalty is an abuse of discretion.

(2) The judge may not add civil penalties unless our penalty is an abuse of discretion that favors you.

(d) *Effect of enforcement actions on other requirements.* Our pursuit of civil

or administrative penalties does not affect or limit our authority to enforce any provisions of this chapter.

(e) *Penalties.* In any proceedings, the United States government may seek to collect civil penalties assessed under this section.

(1) Once a penalty assessment is final, if you do not pay it, the Administrator will ask the Attorney General to bring a civil action in an appropriate district court to recover the money. We may collect interest from the date of the final order or final judgment at rates established by the Internal Revenue Code of 1986 (26 U.S.C. 6621(a)(2)). In this action to collect overdue penalties, the court will not review the validity, amount, and appropriateness of the penalty.

(2) In addition, if you do not pay the full amount of a penalty on time, you must then pay more to cover interest, enforcement expenses (including attorney's fees and costs for collection), and a quarterly nonpayment penalty for each quarter you do not pay. The quarterly nonpayment penalty is 10 percent of your total penalties plus any unpaid nonpayment penalties from previous quarters.

[73 59344, Oct. 8, 2008, as amended at 75 FR 23062, Apr. 30, 2010]

Subpart C—Exemptions and Exclusions

§ 1068.201 Does EPA exempt or exclude any engines/equipment from the prohibited acts?

We may exempt new engines/equipment from some or all of the prohibited acts or requirements of this part under provisions described in this subpart. We may exempt engines/equipment already placed in service in the United States from the prohibition in § 1068.101(b)(1) if the exemption for engines/equipment used solely for competition applies (see § 1068.235). In addition, see § 1068.1 and the standard-setting parts to determine if other engines/equipment are excluded from some or all of the regulations in this chapter.

(a) This subpart identifies which engines/equipment qualify for exemptions and what information we need. We may ask for more information.

(b) If you violate any of the terms, conditions, instructions, or requirements to qualify for an exemption, we may void, revoke, or suspend the exemption.

(c) If you use an exemption under this subpart, we may require you to add a permanent label to your exempted engines/equipment. You may ask us to modify these labeling requirements if it is appropriate for your engine/equipment.

(d) If you produce engines/equipment we exempt under this subpart, we may require you to make and keep records, perform tests, make reports and provide information as needed to reasonably evaluate the validity of the exemption.

(e) If you own or operate engines/equipment we exempt under this subpart, we may require you to provide information as needed to reasonably evaluate the validity of the exemption.

(f) Subpart D of this part describes how we apply these exemptions to engines/equipment you import (or intend to import).

(g) If you want to ask for an exemption or need more information, write to the Designated Compliance Officer.

(h) You may ask us to modify the administrative requirements for the exemptions described in this subpart or in subpart D of this part. We may approve your request if we determine that such approval is consistent with the intent of this part. For example, waivable administrative requirements might include some reporting requirements, but would not include any eligibility requirements or use restrictions.

(i) If you want to take an action with respect to an exempted or excluded engine/equipment that is prohibited by the exemption or exclusion, such as selling it, you need to certify the engine/equipment. We will issue a certificate of conformity if you send us an application for certification showing that you meet all the applicable requirements from the standard-setting part and pay the appropriate fee. Alternatively, we may allow you to include in an existing certified engine family those engines/equipment you modify (or otherwise demonstrate) to be identical to engines/equipment already covered by the certificate. We would base

such an approval on our review of any appropriate documentation. These engines/equipment must have emission control information labels that accurately describe their status.

[73 59344, Oct. 8, 2008, as amended at 74 FR 8428, Feb. 24, 2009]

§ 1068.210 What are the provisions for exempting test engines/equipment?

(a) We may exempt engines/equipment that you will use for research, investigations, studies, demonstrations, or training. Note that you are not required to get an exemption under this section for engines that are exempted under other provisions of this part, such as the manufacturer-owned exemption in § 1068.215.

(b) Anyone may ask for a testing exemption.

(c) If you are a certificate holder, you may request an exemption for engines/equipment you intend to include in test programs over a two-year period.

(1) In your request, tell us the maximum number of engines/equipment involved and describe how you will make sure exempted engines/equipment are used only for this testing.

(2) Give us the information described in paragraph (d) of this section if we ask for it.

(d) If you are not a certificate holder, do all the following things:

(1) Show that the proposed test program has a valid purpose under paragraph (a) of this section.

(2) Show you need an exemption to achieve the purpose of the test program (time constraints may be a basis for needing an exemption, but the cost of certification alone is not).

(3) Estimate the duration of the proposed test program and the number of engines/equipment involved.

(4) Allow us to monitor the testing.

(5) Describe how you will ensure that you stay within this exemption's purposes. Address at least the following things:

(i) The technical nature of the test.

(ii) The test site.

(iii) The duration and accumulated engine/equipment operation associated with the test.

(iv) Ownership and control of the engines/equipment involved in the test.

(v) The intended final disposition of the engines/equipment.

(vi) How you will identify, record, and make available the engine/equipment identification numbers.

(vii) The means or procedure for recording test results.

(e) If we approve your request for a testing exemption, we will send you a letter or a memorandum for your signature describing the basis and scope of the exemption. The exemption does not take effect until we receive the signed letter or memorandum from you. It will also include any necessary terms and conditions, which normally require you to do the following:

(1) Stay within the scope of the exemption.

(2) Create and maintain adequate records that we may inspect.

(3) Add a permanent label to all engines/equipment exempted under this section, consistent with § 1068.45, with at least the following items:

(i) The label heading ''EMISSION CONTROL INFORMATION''.

(ii) Your corporate name and trademark.

(iii) Engine displacement, family identification, and model year of the engine/equipment (as applicable), or whom to contact for further information.

(iv) One of these statements (as applicable):

(A) ''THIS ENGINE IS EXEMPT UNDER 40 CFR 1068.210 OR 1068.215 FROM EMISSION STANDARDS AND RELATED REQUIREMENTS.''

(B) ''THIS EQUIPMENT IS EXEMPT UNDER 40 CFR 1068.210 OR 1068.215 FROM EMISSION STANDARDS AND RELATED REQUIREMENTS.''

(4) Tell us when the test program is finished.

(5) Tell us the final disposition of the engines/equipment.

(6) Send us a written confirmation that you meet the terms and conditions of this exemption.

§ 1068.215 What are the provisions for exempting manufacturer-owned engines/equipment?

(a) You are eligible for the exemption for manufacturer-owned engines/equipment only if you are a certificate holder. Any engine for which you meet all

applicable requirements under this section is exempt without request.

(b) Engines/equipment may be exempt without a request if they are nonconforming engines/equipment under your ownership, possession, and control and you do not operate them for purposes other than to develop products, assess production methods, or promote your engines/equipment in the marketplace, or other purposes we approve. You may not loan, lease, sell, or use the engine/equipment to generate revenue, either by itself or for an engine installed in a piece of equipment, except as allowed by §1068.201(i). Note that this paragraph (b) does not prevent the sale or shipment of a partially complete engine to a secondary engine manufacturer that will meet the requirements of this paragraph (b). *See* §1068.262 for provisions related to shipping partially complete engines to secondary engine manufacturers.

(c) To use this exemption, you must do three things:

(1) Establish, maintain, and keep adequately organized and indexed information on all exempted engines/equipment, including the engine/equipment identification number, the use of the engine/equipment on exempt status, and the final disposition of any engine/equipment removed from exempt status.

(2) Let us access these records, as described in §1068.20.

(3) Add a permanent label to all engines/equipment exempted under this section, consistent with §1068.45, with at least the following items:

(i) The label heading ''EMISSION CONTROL INFORMATION''.

(ii) Your corporate name and trademark.

(iii) Family identification and model year of the engine/equipment (as applicable), or whom to contact for further information.

(iv) One of these statements (as applicable):

(A) ''THIS ENGINE IS EXEMPT UNDER 40 CFR 1068.210 OR 1068.215 FROM EMISSION STANDARDS AND RELATED REQUIREMENTS.''

(B) ''THIS EQUIPMENT IS EXEMPT UNDER 40 CFR 1068.210 OR 1068.215 FROM EMISSION STANDARDS AND RELATED REQUIREMENTS.''

[73 59344, Oct. 8, 2008, as amended at 75 FR 23062, Apr. 30, 2010]

§1068.220 What are the provisions for exempting display engines/equipment?

(a) Anyone may request an exemption for display engines/equipment.

(b) Nonconforming display engines/equipment will be exempted if they are used only for displays in the interest of a business or the general public. This exemption does not apply to engines/equipment displayed for private use, private collections, or any other purpose we determine is inappropriate for a display exemption.

(c) You may operate the exempted engine/equipment, but only if we approve specific operation that is part of the display.

(d) You may sell or lease the exempted engine/equipment only with our advance approval; you may not use it to generate revenue.

(e) To use this exemption, you must add a permanent label to all engines/equipment exempted under this section, consistent with §1068.45, with at least the following items:

(1) The label heading ''EMISSION CONTROL INFORMATION''.

(2) Your corporate name and trademark.

(3) Engine displacement, family identification, and model year of the engine/equipment (as applicable), or whom to contact for further information.

(4) One of these statements (as applicable):

(i) ''THIS ENGINE IS EXEMPT UNDER 40 CFR 1068.220 FROM EMISSION STANDARDS AND RELATED REQUIREMENTS.''

(ii) ''THIS EQUIPMENT IS EXEMPT UNDER 40 CFR 1068.220 FROM EMISSION STANDARDS AND RELATED REQUIREMENTS.''

(f) We may set other conditions for approval of this exemption.

§1068.225 What are the provisions for exempting engines/equipment for national security?

(a) An engine/equipment is exempt without a request if it will be used or

owned by an agency of the federal government responsible for national defense, where the equipment in which it is installed has armor, permanently attached weaponry, or other substantial features typical of military combat.

(b) Manufacturers may request a national security exemption for engines/equipment not meeting the conditions of paragraph (a) of this section as long as the request is endorsed by an agency of the Federal government responsible for national defense. In your request, explain why you need the exemption.

(c) [Reserved]

(d) Add a permanent label to all engines/equipment exempted under this section, consistent with § 1068.45, with at least the following items:

(1) The label heading ''EMISSION CONTROL INFORMATION''.

(2) Your corporate name and trademark.

(3) Engine displacement, family identification, and model year of the engine/equipment (as applicable), or whom to contact for further information.

(4) One of these statements (as applicable):

(i) ''THIS ENGINE HAS AN EXEMPTION FOR NATIONAL SECURITY UNDER 40 CFR 1068.225.''

(ii) ''THIS EQUIPMENT HAS AN EXEMPTION FOR NATIONAL SECURITY UNDER 40 CFR 1068.225.''

[73 59344, Oct. 8, 2008, as amended at 74 8428, Feb. 24, 2009; 75 FR 23062, Apr. 30, 2010]

§ 1068.230 What are the provisions for exempting engines/equipment for export?

The provisions of this section apply differently depending on the country to which the engines/equipment are being exported.

(a) We will not exempt new engines/equipment if you export them to a country with emission standards identical to ours, in which case they must be covered by a certificate of conformity. Where we determine that such engines/equipment will not be placed into service in the United States, the following provisions apply for special export-only certification:

(1) The engines/equipment must be covered by a certificate of conformity or equivalent approval issued by the destination country.

(2) To get an export-only certificate of conformity, send the Designated Compliance Officer a request. We may require you to provide information such as documentation of the foreign certification and related test data.

(3) No fees apply for export-only certification.

(4) The engines/equipment must be labeled as specified in paragraph (d) of this section.

(5) This export-only certificate is not considered a valid certificate of conformity with respect to the prohibition in § 1068.101(a)(1) for sale to ultimate purchasers in the United States. These engines/equipment also may not reenter the United States unless the regulations of this chapter otherwise allow it.

(b) Engines/equipment exported to a country not covered by paragraph (a) of this section are exempt from the prohibited acts in this part without a request. If you produce exempt engines/equipment for export and any of them are sold or offered for sale to an ultimate purchaser in the United States, we will void the exemption for those engines/equipment.

(c) Except as specified in paragraph (d) of this section, label exempted engines/equipment (including shipping containers if the label on the engine/equipment will be obscured by the container) with a label showing that they are not certified for sale or use in the United States. This label may be permanent or removable. See § 1068.45 for provisions related to the use of removable labels and applying labels to containers without labeling individual engines/equipment. The label must include your corporate name and trademark and one of the following statements (as applicable):

(1) ''THIS ENGINE IS SOLELY FOR EXPORT AND IS THEREFORE EXEMPT UNDER 40 CFR 1068.230 FROM U.S. EMISSION STANDARDS AND RELATED REQUIREMENTS.''

(2) ''THIS EQUIPMENT IS SOLELY FOR EXPORT AND IS THEREFORE EXEMPT UNDER 40 CFR 1068.230 FROM U.S. EMISSION STANDARDS AND RELATED REQUIREMENTS.''

(d) You must apply a permanent label as specified in this paragraph (d) for engines/equipment certified under paragraph (a) of this section. You may apply a permanent label as specified in this paragraph (d) instead of the label specified in paragraph (c) of this section for exempted engines/equipment. Add a permanent label meeting the requirements of the destination country and include in the bill of lading a statement that the engines/equipment must be exported to avoid violating EPA regulations. We may modify applicable labeling requirements to align with the labeling requirements that apply for the destination country.

(e) We may set other reasonable conditions to ensure that engines/equipment exempted under this section are not placed into service in the United States.

(f) Exemptions under this section expire once engines are no longer in the United States. Therefore exemptions under this section do not allow engines to be imported back into the United States.

§ 1068.235 What are the provisions for exempting engines/equipment used solely for competition?

(a) New engines/equipment you produce that are used solely for competition are generally excluded from emission standards. See the standard-setting parts for specific provisions where applicable.

(b) If you modify any engines/equipment after they have been placed into service in the United States so they will be used solely for competition, they are exempt without request. This exemption applies only to the prohibition in § 1068.101(b)(1) and is valid only as long as the engine/equipment is used solely for competition. You may not use the provisions of this paragraph (b) to circumvent the requirements that apply to the sale of new competition engines under the standard-setting part.

(c) If you modify any engines/equipment under paragraph (b) of this section, you must destroy the original emission labels. If you loan, lease, sell, or give any of these engines/equipment to someone else, you must tell the new owner (or operator, if applicable) in writing that they may be used only for competition.

§ 1068.240 What are the provisions for exempting new replacement engines?

The prohibitions in § 1068.101(a)(1) do not apply to a new engine if it is exempt under this section as a replacement engine. For purposes of this section, a replacement engine is a new engine that is used to replace an engine that has already been placed into service (whether the previous engine is replaced in whole or in part with a new engine).

(a) *General provisions*. You are eligible for the exemption for new replacement engines only if you are a certificate holder. Note that this exemption does not apply for locomotives (40 CFR 1033.601) and that unique provisions apply to marine compression-ignition engines (40 CFR 1042.615). Paragraphs (b), (c), and (d) of this section describe different approaches for exempting new replacement engines where the engines are specially built to correspond to an earlier model year that was subject to less stringent standards than those that apply for current production (or is no longer covered by a certificate of conformity). Paragraph (e) of this section describes a simpler approach for exempting partially complete new replacement engines that are built under a certificate of conformity that is valid for producing engines for the current model year.

(b) *Previous-tier replacement engines with tracking*. You may produce any number of new replacement engines under this section if all the following conditions are true:

(1) You produce a new engine to replace an engine already placed into service in a piece of equipment.

(2) The engine being replaced was not originally subject to emission standards or was originally subject to less stringent emission standards than those that would otherwise apply to the new engine. The provisions of this paragraph (b) also apply for engines that were originally certified to the same standards that apply for the current model year if you no longer have a certificate of conformity to continue producing that engine configuration.

(3) You determine that you do not produce an engine certified to meet current requirements that has the appropriate physical or performance characteristics to repower the equipment. If the engine being replaced was made by a different company, you must make this determination also for engines produced by this other company. You must keep records to document your basis for making this determination.

(4) You or your agent takes possession of the old engine or confirms that the old engine has been destroyed.

(5) If the old engine was subject to emission standards, you must make the new replacement engine in a configuration identical in all material respects to the old engine and meet the requirements of §1068.265. You may alternatively make the new replacement engine in a configuration identical in all material respects to another certified engine of the same or later model year as long as the engine is not certified with a family emission limit higher than that of the old engine.

(6) You add a permanent label, consistent with §1068.45, with your corporate name and trademark and the following additional information:

(i) Add the following statement if the engine being replaced was not subject to any emission standards under this chapter:

THIS ENGINE DOES NOT COMPLY WITH U.S. EPA EMISSION REQUIREMENTS. SELLING OR INSTALLING THIS ENGINE FOR ANY PURPOSE OTHER THAN TO REPLACE AN ENGINE BUILT BEFORE JANUARY 1, [Insert appropriate year reflecting when the earliest tier of standards began to apply to engines of that size and type] MAY BE A VIOLATION OF FEDERAL LAW SUBJECT TO CIVIL PENALTY.

(ii) Add the following statement if the engine being replaced was subject to emission standards:

THIS ENGINE COMPLIES WITH U.S. EPA EMISSION REQUIREMENTS FOR [Identify the appropriate emission standards (by model year, tier, or emission levels) for the replaced engine] ENGINES UNDER 40 CFR 1068.240. SELLING OR INSTALLING THIS ENGINE FOR ANY PURPOSE OTHER THAN TO REPLACE A [Identify the appropriate emission standards for the replaced engine, by model year(s), tier(s), or emission levels)] ENGINE MAY BE A VIOLATION OF FEDERAL LAW SUBJECT TO CIVIL PENALTY.

(7) Engines exempt under this paragraph (b) may not be introduced into commerce before you make the determination under paragraph (b)(3), except as specified in this paragraph (b)(7). We may waive this restriction for engines excluded under paragraph (c)(5) of this section that you ship to a distributor. Where we waive this restriction, you must take steps to ensure that the engine is installed consistent with the requirements of this paragraph (b). For example, at a minimum you must report to us annually whether engines we allowed you to ship to a distributor under this paragraph (b)(7) have been placed into service or remain in inventory. After an engine is placed into service, your report must describe how the engine was installed consistent with the requirements of this paragraph (b). Send these reports to the Designated Compliance Officer by the deadlines we specify.

(c) *Previous-tier replacement engines without tracking.* You may produce a limited number of new replacement engines that are not from a currently certified engine family under the provisions of this paragraph (c). If you produce new engines under this paragraph (c) to replace engines subject to emission standards, the new replacement engine must be in a configuration identical in all material respects to the old engine and meet the requirements of §1068.265. This would apply, for example, for engine configurations that were certified in an earlier model year but are no longer covered by a certificate of conformity. You must comply with the requirements of paragraph (b) of this section for any number of replacement engines you produce in excess of what we allow under this paragraph (c). Engines produced under this paragraph (c) may be redesignated as engines subject to paragraph (b) of this section, as long as you meet all the requirements and conditions of paragraph (b) of this section before the end

of the calendar year in which the engine was produced. The following provisions apply to engines exempted under this paragraph (c):

(1) You may produce a limited number of replacement engines under this paragraph (c) representing 0.5 percent of your annual production volumes for each category and subcategory of engines identified in Table 1 to this section (1.0 percent through 2013). Calculate this number by multiplying your annual U.S.-directed production volume by 0.005 (or 0.01 through 2013) and rounding to the nearest whole number. Determine the appropriate production volume by identifying the highest total annual U.S.-directed production volume of engines from the previous three model years for all your certified engines from each category or subcategory identified in Table 1 to this section, as applicable. In unusual circumstances, you may ask us to base your production limits on U.S.-directed production volume for a model year more than three years prior. Include only those stationary engines from your U.S.-directed production volume that are certified under one of the standard-setting parts identified in Table 1 to this section. Do not include any exempted engines you produce as part of your U.S.-directed production volume, even if those engines must meet emission standards as a condition of the exemption. Include U.S.-directed engines produced by any parent or subsidiary companies and those from any other companies you license to produce engines for you.

(2) Count every exempted new replacement engine from your total U.S.-directed production volume that you produce in a given calendar year under this paragraph (c), including partially complete engines, except for the following:

(i) Engines built to specifications for an earlier model year under paragraph (b) of this section.

(ii) Partially complete engines exempted under paragraph (e) of this section.

(3) Send the Designated Compliance Officer a report by February 15 of the year following any year in which you produced exempted replacement engines under this paragraph (c). In your report include the total number of replacement engines you produce under this paragraph (c) for each category or subcategory, as appropriate, and the corresponding total production volumes determined under paragraph (c)(1) of this section. If you send us a report under this paragraph (c)(3), you must also include the total number of replacement engines you produced under paragraphs (b), (d), and (e) of this section. You may include this information in production reports required under the standard-setting part.

(4) Add a permanent label as specified in paragraph (b)(6) of this section. For partially complete engines, you may alternatively add a permanent or removable label as specified in paragraph (d) of this section.

(5) You may not use the provisions of this paragraph (c) for any engines in the following engine categories or subcategories:

(i) Land-based nonroad compression-ignition engines we regulate under 40 CFR part 1039 with a per-cylinder displacement at or above 7.0 liters.

(ii) Marine compression-ignition engines we regulate under 40 CFR part 1042 with a per-cylinder displacement at or above 7.0 liters.

(iii) Locomotive engines we regulate under 40 CFR part 1033.

(d) *Partially complete engines.* The following requirements apply if you ship a partially complete replacement engine under paragraph (b) or (c) of this section:

(1) Provide instructions specifying how to complete the engine assembly such that the resulting engine conforms to the applicable certificate of conformity or the specifications of § 1068.265. Where a partially complete engine can be built into multiple different configurations, you must be able to identify all the engine models and model years for which the partially complete engine may properly be used for replacement purposes. Your instructions must make clear how the final assembler can determine which configurations are appropriate for the engine they receive.

(2) You must label the engine as follows:

(i) If you have a reasonable basis to believe that the fully assembled engine

will include the original emission control information label, you may add a removable label to the engine with your corporate name and trademark and the statement: ''This replacement engine is exempt under 40 CFR 1068.240.'' This would generally apply if all the engine models that are compatible with the replacement engine were covered by a certificate of conformity and they were labeled in a position on the engine or equipment that is not included as part of the partially complete engine being shipped for replacement purposes. Removable labels must meet the requirements specified in § 1068.45.

(ii) If you do not qualify for using a removable label in paragraph (d)(1) of this section, you must add a permanent label in a readily visible location, though it may be obscured after installation in a piece of equipment. Include on the permanent label your corporate name and trademark, the engine's part number (or other identifying information), and the statement: ''This replacement engine is exempt under 40 CFR 1068.240.'' If there is not enough space for this statement, you may alternatively add: ''REPLACEMENT'' or ''SERVICE ENGINE''. For purposes of this paragraph (d)(2), engine part numbers permanently stamped or engraved on the engine are considered to be included on the label.

(e) *Partially complete current-tier replacement engines.* The provisions of paragraph (d) of this section apply for partially complete engines you produce from a current line of certified engines or vehicles. This applies for engine-based and equipment-based standards as follows:

(1) Where engine-based standards apply, you may introduce into U.S. commerce short blocks or other partially complete engines from a currently certified engine family as replacement components for in-use equipment powered by engines you originally produced. You must be able to identify all the engine models and model years for which the partially complete engine may properly be used for replacement purposes.

(2) Where equipment-based standards apply, you may introduce into U.S. commerce engines that are identical to engines covered by a current certificate of conformity by demonstrating compliance with currently applicable standards where the engines will be installed as replacement engines. These engines might be fully assembled, but we would consider them to be partially complete engines because they are not yet installed in the equipment.

(f) *Emission credits.* Replacement engines exempted under this section may not generate or use emission credits under the standard-setting part nor be part of any associated credit calculations.

(g) *Circumvention.* The provisions of this section may not be used to circumvent emission standards that apply to new engines under the standard-setting part.

(1) The provisions of this section are intended to allow for replacement of engines that fail prematurely if none of the following is true:

(i) The engine can reasonably be repaired or rebuilt.

(ii) A different used engine (including rebuilt engines) can be used, consistent with applicable regulations. Note that the regulations limit the use of used engines from certain categories, such as converting land-based engines for use in marine vessels.

(iii) A new certified engine is available with the appropriate physical and performance characteristics.

(2) Anyone installing or completing assembly of an exempted new replacement engine is deemed to be a manufacturer of a new engine with respect to the prohibitions of § 1068.101(a)(1). This applies to all engines exempted under this section.

(3) The stockpiling restrictions specified in § 1068.103(f) do not apply for engines that will be introduced into U.S. commerce only as allowed by this section. The model year restrictions specified in § 1068.103(f) do not apply for engines produced under paragraphs (d) and (e) of this section if you can demonstrate that the engines will be used only as replacement engines.

TABLE 1 TO § 1068.240—ENGINE CATEGORIES AND SUBCATEGORIES FOR STREAMLINED COMPLIANCE PROVISIONS FOR NEW REPLACEMENT ENGINES

Engine category	Standard-setting part [1]	Engine subcategories
Highway CI	40 CFR part 86	disp. < 0.6 L/cyl 0.6 ≤ disp. < 1.2 L/cyl disp. ≥ 1.2 L/cyl
Nonroad CI, Stationary CI, and Marine CI	40 CFR part 1039, or 40 CFR part 1042	disp. < 0.6 L/cyl 0.6 ≤ disp. < 1.2 L/cyl 1.2 ≤ disp. < 2.5 L/cyl 2.5 ≤ disp. < 7.0 L/cyl
Marine SI	40 CFR part 1045	outboard. personal watercraft.
Large SI, Stationary SI, and Marine SI (sterndrive/ inboard only).	40 CFR part 1048 or 40 CFR part 1045	all engines.
Recreational vehicles	40 CFR part 1051	off-highway motorcycle. all-terrain vehicle. snowmobile.
Small SI and Stationary SI	40 CFR part 1054	handheld. Class I. Class II.

[1] Include an engine as being subject to the identified standard-setting part if it will eventually be subject to emission standards under that part. For example, if you certify marine compression-ignition engines under part 94, count those as if they were already subject to part 1042.

[73 59344, Oct. 8, 2008, as amended at 75 FR 23062, Apr. 30, 2010]

§ 1068.245 What temporary provisions address hardship due to unusual circumstances?

(a) After considering the circumstances, we may permit you to introduce into U.S. commerce engines/equipment that do not comply with emission-related requirements for a limited time if all the following conditions apply:

(1) Unusual circumstances that are clearly outside your control prevent you from meeting requirements from this chapter.

(2) You exercised prudent planning and were not able to avoid the violation; you have taken all reasonable steps to minimize the extent of the nonconformity.

(3) No other allowances are available under the regulations in this chapter to avoid the impending violation, including the provisions of § 1068.250.

(4) Not having the exemption will jeopardize the solvency of your company.

(b) If your unusual circumstances are only related to compliance with the model-year provisions of § 1068.103(f), we may grant hardship under this section without a demonstration that the solvency of your company is in jeopardy as follows:

(1) You must demonstrate that the conditions specified in paragraphs (a)(1) through (3) of this section apply.

(2) Your engines/equipment must comply with standards and other requirements that would have applied if assembly were completed on schedule.

(3) You may generally request this exemption only for engines/equipment for which assembly has been substantially completed; you may not begin assembly of any additional engines/equipment under this exemption after the cause for delay has occurred. We may make an exception to this general restriction for secondary engine manufacturers.

(4) As an example, if your normal production process involves purchase of partially complete engines and a supplier fails to deliver all the ordered engines in time for your assembly according to your previously established schedule as a result of a fire at its factory, you may request that we treat those engine as if they had been completed on the original schedule. Note that we would grant relief only for those engines where you had a reasonable basis for expecting the engines to

be delivered on time based on past performance and terms of purchase.

(c) To apply for an exemption, you must send the Designated Compliance Officer a written request as soon as possible before you are in violation. In your request, show that you meet all the conditions and requirements in paragraph (a) of this section.

(d) Include in your request a plan showing how you will meet all the applicable requirements as quickly as possible.

(e) You must give us other relevant information if we ask for it.

(f) We may include reasonable additional conditions on an approval granted under this section, including provisions to recover or otherwise address the lost environmental benefit or paying fees to offset any economic gain resulting from the exemption. For example, in the case of multiple tiers of emission standards, we may require that you meet the standards from the previous tier whether or not your hardship is granted under paragraph (b) of this section.

(g) Add a permanent label to all engines/equipment exempted under this section, consistent with § 1068.45, with at least the following items:

(1) The label heading ''EMISSION CONTROL INFORMATION''.

(2) Your corporate name and trademark.

(3) Engine displacement (in liters or cubic centimeters), and model year of the engine/equipment, (as applicable); or whom to contact for further information. We may also require that you include maximum engine power.

(4) A statement describing the engine's status as an exempted engine:

(i) If the engine/equipment does not meet any emission standards, add one of the following statements:

(A) ''THIS ENGINE IS EXEMPT UNDER 40 CFR 1068.245 FROM EMISSION STANDARDS AND RELATED REQUIREMENTS.''

(B) ''THIS EQUIPMENT IS EXEMPT UNDER 40 CFR 1068.245 FROM EMISSION STANDARDS AND RELATED REQUIREMENTS.''

(ii) If the engines/equipment meet alternate emission standards as a condition of an exemption under this section, we may specify a different statement to identify the alternate emission standards.

§ 1068.250 What are the provisions for extending compliance deadlines for small businesses under hardship?

(a) After considering the circumstances, we may extend the compliance deadline for you to meet new or revised emission standards as long as you meet all the conditions and requirements in this section.

(b) You must be a small business to be eligible for this exemption.

(c) Send the Designated Compliance Officer a written request for an extension. In your request, show that all the following conditions and requirements apply:

(1) You have taken all possible business, technical, and economic steps to comply.

(i) In the case of importers of engines/equipment produced by other companies, show that you attempted to find a manufacturer capable of supplying complying products as soon as you became aware of the applicable requirements but were unable to do so.

(ii) For all other manufacturers, show that the burden of compliance costs prevents you from meeting the requirements of this chapter.

(2) Not having the exemption will jeopardize the solvency of your company.

(3) No other allowances are available under the regulations in this chapter to avoid the impending violation.

(d) In describing the steps you have taken to comply under paragraph (c)(1) of this section, include at least the following information:

(1) Describe your business plan, showing the range of projects active or under consideration.

(2) Describe your current and projected financial status, with and without the burden of complying fully with the applicable regulations in this chapter.

(3) Describe your efforts to raise capital to comply with regulations in this chapter (this may not apply for importers).

(4) Identify the engineering and technical steps you have taken or those you plan to take to comply with regulations in this chapter.

(5) Identify the level of compliance you can achieve. For example, you may be able to produce engines/equipment that meet a somewhat less stringent emission standard than the regulations in this chapter require.

(e) Include in your request a plan showing how you will meet all the applicable requirements as quickly as possible.

(f) You must give us other relevant information if we ask for it.

(g) An authorized representative of your company must sign the request and include the statement: ''All the information in this request is true and accurate to the best of my knowledge.''

(h) Send your request for this extension at least nine months before the relevant deadline. If different deadlines apply to companies that are not small-volume manufacturers, do not send your request before the regulations in question apply to the other manufacturers. Otherwise, do not send your request more than three years before the relevant deadline.

(i) We may include reasonable requirements on an approval granted under this section, including provisions to recover or otherwise address the lost environmental benefit. For example, we may require that you meet a less stringent emission standard or buy and use available emission credits.

(j) We may approve extensions of the compliance deadlines as reasonable under the circumstances up to one model year at a time, and up to three years total.

(k) Add a permanent label to all engines/equipment exempted under this section, consistent with §1068.45, with at least the following items:

(1) The label heading ''EMISSION CONTROL INFORMATION''.

(2) Your corporate name and trademark.

(3) Engine displacement (in liters or cubic centimeters), and model year of the engine/equipment (as applicable); or whom to contact for further information. We may also require that you include maximum engine power.

(4) A statement describing the engine's status as an exempted engine:

(i) If the engine/equipment does not meet any emission standards, add one of the following statements:

(A) ''THIS ENGINE IS EXEMPT UNDER 40 CFR 1068.250 FROM EMISSION STANDARDS AND RELATED REQUIREMENTS.''

(B) ''THIS EQUIPMENT IS EXEMPT UNDER 40 CFR 1068.250 FROM EMISSION STANDARDS AND RELATED REQUIREMENTS.''

(ii) If the engine/equipment meets alternate emission standards as a condition of an exemption under this section, we may specify a different statement to identify the alternate emission standards.

§1068.255 What are the provisions for exempting engines and fuel-system components for hardship for equipment manufacturers and secondary engine manufacturers?

This section describes how, in unusual circumstances, we may approve an exemption to prevent hardship to an equipment manufacturer or a secondary engine manufacturer. This section does not apply to products that are subject to equipment-based exhaust emission standards.

(a) *Equipment exemption*. As an equipment manufacturer, you may ask for approval to produce exempted equipment for up to 12 months. We will generally limit this to the first year that new or revised emission standards apply. Send the Designated Compliance Officer a written request for an exemption before you are in violation. In your request, you must show you are not at fault for the impending violation and that you would face serious economic hardship if we do not grant the exemption. This exemption is not available under this paragraph (a) if you manufacture the engine or fuel-system components you need for your own equipment, or if complying engines or fuel-system components are available from other manufacturers that could be used in your equipment, unless we allow it elsewhere in this chapter. We may impose other conditions, including provisions to use products meeting less stringent emission standards or to recover the lost environmental benefit. In determining whether to grant the exemptions, we will consider all relevant factors, including the following:

(1) The number of engines or fuel-system components involved.

(2) The size of your company and your ability to endure the hardship.

(3) The amount of time you had to redesign your equipment to accommodate complying products.

(4) Whether there was any breach of contract by a supplier.

(5) The potential for market disruption.

(b) *Engine and fuel-system component exemption.* As an engine manufacturer or fuel-system component manufacturer, you may produce nonconforming products for the equipment we exempt in paragraph (a) of this section. You do not have to request this exemption but you must have written assurance from equipment manufacturers that they need a certain number of exempted products under this section. Label engines or fuel-system components as follows, consistent with § 1068.45:

(1) *Engines.* Add a permanent label to all engines/equipment exempted under this section with at least the following items:

(i) The label heading ''EMISSION CONTROL INFORMATION''.

(ii) Your corporate name and trademark.

(iii) Engine displacement (in liters or cubic centimeters) and model year of the engine, or whom to contact for further information. We may also require that you include maximum engine power.

(iv) If the engine does not meet any emission standards: ''THIS ENGINE IS EXEMPT UNDER 40 CFR 1068.255 FROM EMISSION STANDARDS AND RELATED REQUIREMENTS.'' If the engine meets alternate emission standards as a condition of an exemption under this section, we may specify a different statement to identify the alternate emission standards.

(2) *Fuel-system components.* Add a permanent label to all engines/equipment exempted under this section with at least the following items:

(i) Your corporate name and trademark.

(ii) The statement ''EXEMPT UNDER 40 CFR 1068.255''.

(c) *Secondary engine manufacturers.* As a secondary engine manufacturer, you may ask for approval to produce exempted engines under this section for up to 12 months. We may require you to certify your engines to compliance levels above the emission standards that apply. For example, in the case of multiple tiers of emission standards, we may require you to meet the standards from the previous tier.

(1) The provisions in paragraph (a) of this section that apply to equipment manufacturers requesting an exemption apply equally to you except that you may manufacture the engines. Before we approve an exemption under this section, we will generally require that you commit to a plan to make up the lost environmental benefit.

(i) If you produce uncertified engines under this exemption, we will calculate the lost environmental benefit based on our best estimate of uncontrolled emission rates for your engines.

(ii) If you produce engines under this exemption that are certified to a compliance level less stringent than the emission standards that would otherwise apply, we will calculate the lost environmental benefit based on the compliance level you select for your engines.

(2) The labeling requirements in paragraph (b) of this section apply to your exempted engines; however, if you certify engines to specific compliance levels, state on the label the compliance levels that apply to each engine.

§ 1068.260 What general provisions apply for selling or shipping engines that are not yet in their certified configuration?

Except as specified in paragraph (e) of this section, all new engines in the United States are presumed to be subject to the prohibitions of § 1068.101, which generally require that all new engines be in a certified configuration before being introduced into U.S. commerce. All emission-related components generally need to be installed on an engine for such an engine to be in its certified configuration. This section specifies clarifications and exemptions related to these requirements for engines. Except for paragraph (c) of this section, the provisions of this section generally apply for engine-based standards but not for equipment-based standards.

(a) The provisions of this paragraph (a) apply for emission-related components that cannot practically be assembled before shipment because they depend on equipment design parameters.

(1) You do not need an exemption to ship an engine that does not include installation or assembly of certain emission-related components, if those components are shipped along with the engine. For example, you may generally ship aftertreatment devices along with engines rather than installing them on the engine before shipment. We may require you to describe how you plan to use this provision.

(2) You may ask us at the time of certification for an exemption to allow you to ship your engines without emission-related components. If we allow this, we may specify conditions that we determine are needed to ensure that shipping the engine without such components will not result in the engine being operated outside of its certified configuration. *See* paragraph (d) of this section for additional provisions that apply in certain circumstances.

(b) You do not need an exemption to ship engines without specific components if they are not emission-related components identified in Appendix I of this part. For example, you may generally ship engines without radiators needed to cool the engine.

(c) If you are a certificate holder, partially complete engines shipped between two of your facilities are exempt, subject to the provisions of this paragraph (c), as long as you maintain ownership and control of the engines until they reach their destination. We may also allow this where you do not maintain actual ownership and control of the engines (such as hiring a shipping company to transport the engines) but only if you demonstrate that the engines will be transported only according to your specifications. *See* §1068.261(b) for the provisions that apply instead of this paragraph (c) for the special case of integrated manufacturers using the delegated-assembly exemption. Notify us of your intent to use this exemption in your application for certification, if applicable. Your exemption is effective when we grant your certificate. You may alternatively request an exemption in a separate submission; for example, this would be necessary if you will not be the certificate holder for the engines in question. We may require you to take specific steps to ensure that such engines are in a certified configuration before reaching the ultimate purchaser. Note that since this is a temporary exemption, it does not allow you to sell or otherwise distribute to ultimate purchasers an engine in an uncertified configuration. Note also that the exempted engine remains new and subject to emission standards (*see* definition of ''exempted'' in §1068.30) until its title is transferred to the ultimate purchaser or it otherwise ceases to be new.

(d) See §1068.261 for delegated-assembly provisions in which certificate-holding manufacturers introduce into U.S. commerce engines that are not yet equipped with certain emission-related components. See §1068.262 for provisions related to manufacturers introducing into U.S. commerce partially complete engines for which a secondary engine manufacturer holds the certificate of conformity.

(e) Engines used in hobby vehicles are not presumed to be engines subject to the prohibitions of §1068.101. Hobby vehicles are reduced-scale models of vehicles that are not capable of transporting a person. Some gas turbine engines are subject to the prohibitions of §1068.101, but we do not presume that all gas turbine engines are subject to these prohibitions. Other engines that do not have a valid certificate of conformity or exemption when introduced into U.S. commerce are presumed to be engines subject to the prohibitions of §1068.101 unless we determine that such engines are excluded from the prohibitions of §1068.101.

(f) While we presume that new nonhobby engines are subject to the prohibitions of §1068.101, we may determine that a specific engine is not subject to these prohibitions based on information you provide or other information that is available to us. For example, the provisions of this part 1068 and the standard-setting parts provide for exemptions in certain circumstances. Also, some engines are subject to separate prohibitions under

subchapter C instead of the prohibitions of § 1068.101 (see for example, 40 CFR 89.1003).

[73 59344, Oct. 8, 2008, as amended at 75 FR 23064, Apr. 30, 2010]

§ 1068.261 What provisions apply for selling or shipping certified engines that are not yet in the certified configuration?

This section describes an exemption that allows certificate holders to sell or ship engines that are missing certain emission-related components if those components will be installed by an equipment manufacturer. This section does not apply to equipment subject to equipment-based standards. See the standard-setting part to determine whether and how the provisions of this section apply. (Note: See § 1068.262 for provisions related to manufacturers introducing into U.S. commerce partially complete engines for which someone else holds the certificate of conformity.) This exemption is temporary as described in paragraph (f) of this section.

(a) Shipping an engine separately from an aftertreatment component that you have specified as part of its certified configuration will not be a violation of the prohibitions in § 1068.101(a)(1) subject to the provisions in this section.

(b) If you manufacture engines and install them in equipment you also produce, you must take steps to ensure that your facilities, procedures, and production records are set up to ensure that equipment and engines are assembled in their proper certified configurations. For example, you may demonstrate compliance with the requirements of this section by maintaining a database showing how you pair aftertreatment components with the appropriate engines such that the final product is in its certified configuration.

(c) If you include the price of all aftertreatment components in the price of the engine and ship the aftertreatment components directly to the equipment manufacturer, or arrange for separate shipment by the component manufacturer to the equipment manufacturer, all the following conditions apply:

(1) Apply for and receive a certificate of conformity for the engine and its emission control system before shipment as described in the standard-setting part. For an existing certificate of conformity, amend the application for certification by describing your plans to use the provisions of this section as described in paragraph (c)(8) of this section.

(2) Provide installation instructions in enough detail to ensure that the engine will be in its certified configuration if someone follows these instructions. Provide the installation instructions in a timely manner, generally directly after you receive an order for shipping engines or earlier. If you apply removable labels as described in paragraph (c)(7)(i) of this section, include an instruction for the equipment manufacturer to remove the label after installing the appropriate aftertreatment component.

(3) Have a contractual agreement with the equipment manufacturer obligating the equipment manufacturer to complete the final assembly of the engine so it is in its certified configuration when final assembly is complete. This agreement must also obligate the equipment manufacturer to provide the affidavits required under paragraph (c)(4) of this section.

(4) Take appropriate additional steps to ensure that all engines will be in a certified configuration when installed by the equipment manufacturer. At a minimum, you must obtain annual affidavits from every equipment manufacturer to which you sell engines under this section. Include engines that you sell to distributors or dealers. The affidavits must list the part numbers of the aftertreatment devices that equipment manufacturers install on each engine they purchase from you under this section and include confirmation that the number of aftertreatment devices received were sufficient for the number of engines involved.

(5) [Reserved]

(6) Keep records to document how many engines you produce under this exemption. Also, keep records to document your contractual agreements under paragraph (c)(3) of this section. Keep all these records for five years after the end of the applicable model

year and make them available to us upon request.

(7) Make sure the engine has the emission control information label we require under the standard-setting part. Include additional labeling using one of the following approaches:

(i) Apply an additional removable label in a way that makes it unlikely that the engine will be installed in equipment other than in its certified configuration. The label must identify the engine as incomplete and include a clear statement that failing to install the aftertreatment device, or otherwise failing to bring the engine into its certified configuration, is a violation of federal law subject to civil penalty.

(ii) Add the statement ''DELEGATED ASSEMBLY'' to the permanent emission control information label. You may alternatively add the abbreviated statement ''DEL ASSY'' if there is not enough room on the label.

(8) Describe the following things in your application for certification:

(i) How you plan to use the provisions of this section.

(ii) A detailed plan for auditing equipment manufacturers, as described in paragraph (d)(3) of this section, if applicable.

(iii) All other steps you plan to take under paragraph (c)(4) of this section.

(9) If one of your engines produced under this section is selected for production-line testing or a selective enforcement audit, you must arrange to get a randomly selected aftertreatment component from either the equipment manufacturer or the equipment manufacturer's supplier. You may keep an inventory of these randomly selected parts, consistent with good engineering judgment and the intent of this section. You may obtain such aftertreatment components from any point in the normal distribution from the aftertreatment component manufacturer to the equipment manufacturer. Keep records describing how you randomly selected these aftertreatment components, consistent with the requirements specified in the standard-setting part.

(10) Note that for purposes of importation, you may itemize your invoice to identify separate costs for engines and aftertreatment components that will be shipped separately. A copy of your invoice from the aftertreatment manufacturer may be needed to avoid payment of importation duties for the engine that also include the value of aftertreatment components.

(d) If you do not include the price of all aftertreatment components in the price of the engine, you must meet all the conditions described in paragraphs (c)(1) through (9) of this section, with the following additional provisions:

(1) The contractual agreement described in paragraph (c)(3) of this section must include a commitment that the equipment manufacturer will do the following things:

(i) Purchase the aftertreatment components you have specified in your application for certification and keep records to document these purchases.

(ii) Cooperate with the audits described in paragraph (d)(3) of this section.

(2) You must have written confirmation that the equipment manufacturer has ordered the appropriate type of aftertreatment components for an initial shipment of engines under this section. For the purpose of this paragraph (d)(2), initial shipment means the first shipment of engines that are subject to new or more stringent emissions standard (or the first shipment of engines using the provisions of this section) to a given equipment manufacturer for a given engine family. For the purpose of this paragraph (d)(2), you may treat as a single engine family those engine families from different model years that differ only with respect to model year or other characteristics unrelated to emissions. You must receive the written confirmation within 30 days after shipment. If you do not receive written confirmation within 30 days, you may not ship any more engines from that engine family to that equipment manufacturer until you have the written confirmation. Note that it may be appropriate to obtain subsequent written confirmations to ensure compliance with this section, as described in paragraph (c)(4) of this section.

(3) You must perform or arrange for audits of equipment manufacturers as follows:

(i) If you sell engines to 16 or more equipment manufacturers under the

provisions of this section, you must annually perform or arrange for audits of four equipment manufacturers to whom you sell engines under this section. To select individual equipment manufacturers, divide all the affected equipment manufacturers into quartiles based on the number of engines they buy from you; select a single equipment manufacturer from each quartile each model year. Vary the equipment manufacturers selected for auditing from year to year, though you may repeat an audit in a later model year if you find or suspect that a particular equipment manufacturer is not properly installing aftertreatment devices.

(ii) If you sell engines to fewer than 16 equipment manufacturers under the provisions of this section, set up a plan to perform or arrange for audits of each equipment manufacturer on average once every four model years.

(iii) Starting with the 2019 model year, if you sell engines to fewer than 40 equipment manufacturers under the provisions of this section, you may ask us to approve a reduced auditing rate. We may approve an alternate plan that involves audits of each equipment manufacturer on average once every ten model years as long as you show that you have met the auditing requirements in preceding years without finding noncompliance or improper procedures.

(iv) To meet these audit requirements, you or your agent must at a minimum inspect the assembling companies' procedures and production records to monitor their compliance with your instructions, investigate some assembled engines, and confirm that the number of aftertreatment devices shipped were sufficient for the number of engines produced.

(v) You must keep records of these audits for five years after the end of the applicable model year.

(e) The following provisions apply if you ship engines without air filters or other portions of the air intake system that are specifically identified by part number (or other specific part reference) in the application for certification such that the shipped engine is not in its certified configuration. You do not need an exemption under this section to ship engines without air intake system components if you instead describe in your installation instructions how equipment manufacturers should use components meeting certain functional specifications.

(1) If you are using the provisions of this section to ship an engine without aftertreatment, apply all the provisions of this section to ensure that each engine, including its intake system, is in its certified configuration before it reaches the ultimate purchaser.

(2) If you are not using the provisions of this section to ship an engine without aftertreatment, shipping an engine without air-intake components that you have specified as part of its certified configuration will not be a violation of the prohibitions in §1068.101(a) if you follow the provisions specified in paragraph (b) or paragraphs (c)(1) through (9) of this section. If we find there is a problem, we may require you to perform audits as specified in paragraph (d)(3) of this section.

(f) Once the equipment manufacturer takes possession of an engine exempted under this section and the engine reaches the point of final equipment assembly, the exemption expires and the engine is subject to all the prohibitions in §1068.101. Note that the engine's model year does not change based on the date the equipment manufacturer adds the aftertreatment device and/or air filter under this section.

(g) You may use the provisions of this section for engines you sell to a distributor as described in this paragraph (g) using one of the following approaches:

(1) You may sell engines through a distributor if you comply with the provisions of paragraph (d) of this section with respect to the equipment manufacturer.

(2) You may treat the distributor as the equipment manufacturer as described in this paragraph (g)(2) for all applicable requirements and prohibitions. Such distributors must bring engines into their final certified configuration. This may include shipping the engine with the appropriate aftertreatment device and/or air filter, but without completing the assembly

with all the components. The exemptions expire for such engines when the distributor no longer has control of them.

(h) You must notify us within 15 days if you find from an audit or another source that engines produced under this section are not in a certified configuration at the point of final assembly or that an equipment manufacturer has otherwise failed to meet its obligations under this section. If this occurs, send us a report describing the circumstances related to the noncompliance within 75 days after you notify us.

(i) We may suspend, revoke, or void an exemption under this section, as follows:

(1) We may suspend or revoke your exemption for a specific equipment manufacturer if any of the engines are not in a certified configuration after installation in that manufacturer's equipment, or if we determine that the equipment manufacturer has otherwise failed to comply with the requirements of this section. We may also suspend or revoke your exemption for other engine families with respect to the equipment manufacturer unless you demonstrate that the noncompliance is limited to a specific engine family. You may not use this exemption for future shipments to the affected equipment manufacturer without taking action beyond the minimum steps specified in this section, such as performing on-site audits. We will approve further use of this exemption only if you convince us that you have adequately addressed the factors causing the noncompliance.

(2) We may suspend or revoke your exemption for the entire engine family if we determine that you have failed to comply with the requirements of this section. If we make an adverse decision with respect to the exemption for any of your engine families under this paragraph (i), this exemption will not apply for future certificates unless you convince us that the factors causing the noncompliance do not apply to the other engine families. We may also set additional conditions beyond the provisions specified in this section.

(3) We may void your exemption for the entire engine family if you intentionally submit false or incomplete information or fail to keep and provide to EPA the records required by this section. Note that all records and reports required under this section (whether generated by the engine manufacturer, equipment manufacturer, or others) are subject to the prohibition in § 1068.101(a)(2), which prohibits the submission of false or incomplete information. For example, the affidavits required by this section are considered a submission.

(j) You are liable for the in-use compliance of any engine that is exempt under this section.

(k) It is a violation of § 1068.101(a)(1) for any person to introduce into U.S. commerce a previously exempted engine, including as part of a piece of equipment, without complying fully with the installation instructions.

[73 59344, Oct. 8, 2008, as amended at 75 FR 23064, Apr. 30, 2010]

§ 1068.262 What are the provisions for temporarily exempting engines for shipment to secondary engine manufacturers?

This section specifies when manufacturers may introduce into U.S. commerce partially complete engines that have an exemption or a certificate of conformity held by a secondary engine manufacturer and are not yet in a certified configuration. See the standard-setting part to determine whether and how the provisions of this section apply. (Note: See § 1068.261 for provisions related to manufacturers introducing into U.S. commerce partially complete engines for which they hold the certificate of conformity.) This exemption is temporary as described in paragraph (g) of this section.

(a) The provisions of this section generally apply where the secondary engine manufacturer has substantial control over the design and assembly of emission controls. In determining whether a manufacturer has substantial control over the design and assembly of emission controls, we would consider the degree to which the secondary engine manufacturer would be able to ensure that the engine will conform to the regulations in its final configuration. Such secondary engine manufacturers may finish assembly of partially complete engines in the following cases:

(1) You obtain an engine that is not fully assembled with the intent to manufacture a complete engine.

(2) You obtain an engine with the intent to modify it before it reaches the ultimate purchaser.

(3) You obtain an engine with the intent to install it in equipment that will be subject to equipment-based standards.

(b) Manufacturers may introduce into U.S. commerce partially complete engines as described in this section if they have a written request for such engines from a secondary engine manufacturer that has certified the engine and will finish the engine assembly. The written request must include a statement that the secondary engine manufacturer has a certificate of conformity for the engine and identify a valid engine family name associated with each engine model ordered (or the basis for an exemption if applicable, as specified in paragraph (e) of this section). The original engine manufacturer must apply a removable label meeting the requirements of § 1068.45 that identifies the corporate name of the original manufacturer and states that the engine is exempt under the provisions of § 1068.262. The name of the certifying manufacturer must also be on the label or, alternatively, on the bill of lading that accompanies the engines during shipment. The original engine manufacturer may not apply a permanent emission control information label identifying the engine's eventual status as a certified engine.

(c) The manufacturer that will hold the certificate must include the following information in its application for certification:

(1) Identify the original engine manufacturer of the partially complete engine or of the complete engine you will modify.

(2) Describe briefly how and where final assembly will be completed. Specify how you have the ability to ensure that the engines will conform to the regulations in their final configuration. (Note: Paragraph (a) of this section prohibits using the provisions of this section unless you have substantial control over the design and assembly of emission controls.)

(3) State unconditionally that you will not distribute the engines without conforming to all applicable regulations.

(d) If you are a certificate holder, you may receive shipment of partially complete engines after you apply for a certificate of conformity but before the certificate's effective date. In this case, all the provisions of § 1068.103(c)(1) through (3) apply. This exemption allows the original manufacturer to ship engines after you have applied for a certificate of conformity. Manufacturers may introduce into U.S. commerce partially complete engines as described in this paragraph (d) if they have a written request for such engines from a secondary engine manufacturer stating that the application for certification has been submitted (instead of the information we specify in paragraph (b) of this section). We may set additional conditions under this paragraph (d) to prevent circumvention of regulatory requirements. Consistent with § 1068.103(c), we may also revoke an exemption under this paragraph (d) if we have reason to believe that the application for certification will not be approved or that the engines will otherwise not reach a certified configuration before reaching the ultimate purchaser. This may require that you export the engines.

(e) The provisions of this section also apply for shipping partially complete engines if the engine is covered by a valid exemption and there is no valid engine family name that could be used to represent the engine model. Unless we approve otherwise in advance, you may do this only when shipping engines to secondary engine manufacturers that are certificate holders. In this case, the secondary engine manufacturer must identify the regulatory cite identifying the applicable exemption instead of a valid engine family name when ordering engines from the original engine manufacturer.

(f) If secondary engine manufacturers determine after receiving an engine under this section that the engine will not be covered by a certificate or exemption as planned, they may ask us to allow for shipment of the engines back to the original engine manufacturer or to another secondary engine

manufacturer. This might occur in the case of an incorrect shipment or excess inventory. We may modify the provisions of this section as appropriate to address these cases.

(g) Both original and secondary engine manufacturers must keep the records described in this section for at least five years, including the written request for engines and the bill of lading for each shipment (if applicable). The written request is deemed to be a submission to EPA and is thus subject to the reporting requirements of 40 CFR 1068.101(a)(2).

(h) These provisions are intended only to allow you to obtain or transport engines in the specific circumstances identified in this section so any exemption under this section expires when the engine reaches the point of final assembly identified in accordance paragraph (c)(2) of this section.

(i) For purposes of this section, an allowance to introduce engines into U.S. commerce includes a conditional allowance to sell, introduce, or deliver such partially complete engines into commerce in the United States or import them into the United States. It does not include a general allowance to offer such partially complete engines for sale because this exemption is intended to apply only for cases in which the certificate holder already has an arrangement to purchase the engines from the original engine manufacturer. This exemption does not allow the original engine manufacturer to subsequently offer the engines for sale to a different manufacturer who will hold the certificate unless that second manufacturer has also complied with the requirements of this part. The exemption does not apply for any individual engines that are not labeled as specified in this section or which are shipped to someone who is not a certificate holder.

(j) We may suspend, revoke, or void an exemption under this section, as follows:

(1) We may suspend or revoke your exemption if you fail to meet the requirements of this section. We may suspend or revoke your exemption for a specific secondary engine manufacturer if that manufacturer sells engines that are in not in a certified configuration in violation of the regulations. We may disallow this exemption for future shipments to the affected secondary engine manufacturer or set additional conditions to ensure that engines will be assembled in the certified configuration.

(2) We may void your exemption for all the affected engines if you intentionally submit false or incomplete information or fail to keep and provide to EPA the records required by this section.

(3) The exemption is void for an engine that is shipped to a company that is not a certificate holder or for an engine that is shipped to a secondary engine manufacturer that is not in compliance with the requirements of this section.

(k) No exemption is needed to import equipment that does not include an engine. No exemption is available under this section for equipment subject to equipment-based standards if the engine has been installed.

§ 1068.265 What provisions apply to engines/equipment that are conditionally exempted from certification?

In some cases, exempted engines may need to meet alternate emission standards as a condition of the exemption. For example, replacement engines exempted under § 1068.240 in many cases need to meet the same standards as the engines they are replacing. The standard-setting part may similarly exempt engines/equipment from all certification requirements, or allow us to exempt engines/equipment from all certification requirements for certain cases, but require the engines/equipment to meet alternate standards. In these cases, all the following provisions apply:

(a) Your engines/equipment must meet the alternate standards we specify in (or pursuant to) the exemption section, and all other requirements applicable to engines/equipment that are subject to such standards.

(b) You need not apply for and receive a certificate for the exempt engines/equipment. However, you must comply with all the requirements and obligations that would apply to the engines/equipment if you had received a

certificate of conformity for them unless we specifically waive certain requirements.

(c) You must have emission data from test engines/equipment using the appropriate procedures that demonstrate compliance with the alternate standards unless the engines/equipment are identical in all material respects to engines/equipment that you have previously certified to standards that are the same as, or more stringent than, the alternate standards. Note that ''engines/equipment that you have previously certified'' does not include any engines/equipment initially covered by a certificate that was later voided or otherwise invalidated, or engines/equipment that we have determined did not fully conform to the regulations.

(d) See the provisions of the applicable exemption for labeling instructions, including those related to the compliance statement and other modifications to the label otherwise required in the standard-setting part. If we do not identify specific labeling requirements for an exempted engine, you must meet the labeling requirements in the standard-setting part, with the following exceptions:

(1) Modify the family designation by eliminating the character that identifies the model year.

(2) We may also specify alternative language to replace the compliance statement otherwise required in the standard-setting part.

(e) You may not generate emission credits for averaging, banking, or trading with engines/equipment meeting requirements under the provisions of this section.

(f) Keep records to show that you meet the alternate standards as follows:

(1) If your exempted engines/equipment are identical to previously certified engines/equipment, keep your most recent application for certification for the certified family.

(2) If you previously certified a similar family, but have modified the exempted engines/equipment in a way that changes them from their previously certified configuration, keep your most recent application for certification for the certified family, a description of the relevant changes, and any test data or engineering evaluations that support your conclusions.

(3) If you have not previously certified a similar family, keep all the records we specify for the application for certification and any additional records the standard-setting part requires you to keep.

(g) We may require you to send us an annual report of the engines/equipment you produce under this section.

Subpart D—Imports

§ 1068.301 What general provisions apply?

(a) This subpart applies to you if you import into the United States engines or equipment subject to EPA emission standards or equipment containing engines subject to EPA emission standards.

(b) In general, engines/equipment that you import must be covered by a certificate of conformity unless they were built before emission standards started to apply. This subpart describes the limited cases where we allow importation of exempt or excluded engines/equipment. For equipment not subject to equipment-based exhaust emission standards, an exemption of the engine allows you to import the equipment.

(c) U.S. Customs and Border Protection may prevent you from importing engines or equipment if you do not meet the requirements of this subpart. In addition, U.S. Customs and Border Protection regulations may contain other requirements for engines/equipment imported into the United States (see 19 CFR Chapter I).

(d) Complete the appropriate EPA declaration form before importing any engines or equipment. These forms are available on the Internet at *http://www.epa.gov/OTAQ/imports/ or by phone at 734–214–4100*. Importers must keep the forms for five years and make them available promptly upon request.

§ 1068.305 How do I get an exemption or exclusion for imported engines/equipment?

(a) You must meet the requirements of the specific exemption or exclusion

you intend to use, including any labeling requirements that apply, and complete the appropriate declaration form described in § 1068.301(d).

(b) If we ask for it, prepare a written request in which you do the following:

(1) Give your name, address, telephone number, and taxpayer identification number.

(2) Give the engine/equipment owner's name, address, telephone number, and taxpayer identification number.

(3) Identify the make, model, identification number, and original production year of all engines/equipment.

(4) Identify which exemption or exclusion in this subpart allows you to import nonconforming engines/equipment and describe how your engine/equipment qualifies.

(5) Tell us where you will keep your engines/equipment if you might need to store them until we approve your request.

(6) Authorize us to inspect or test your engines/equipment as the Clean Air Act allows.

(c) We may ask for more information.

(d) You may import the nonconforming engines/equipment you identify in your request if you get prior written approval from us. U.S. Customs and Border Protection may require you to present the approval letter. We may temporarily or permanently approve the exemptions or exclusions, as described in this subpart.

§ 1068.310 What are the exclusions for imported engines/equipment?

If you show us that your engines/equipment qualify under one of the paragraphs of this section, we will approve your request to import such excluded engines/equipment. You must have our approval before importing engines/equipment under paragraph (a) of this section. You may, but are not required to request our approval to import the engines/equipment under paragraph (b) through (c) of this section. The following engines/equipment are excluded:

(a) *Engines/equipment used solely for competition.* Engines/equipment that you demonstrate will be used solely for competition are excluded from the restrictions on imports in § 1068.301(b), but only if they are properly labeled. See the standard-setting part for provisions related to this demonstration. Section 1068.101(b)(4) prohibits anyone from using these excluded engines/equipment for purposes other than competition.

(b) *Stationary engines.* The definition of nonroad engine in § 1068.30 does not include certain engines used in stationary applications. Such engines (and equipment containing such engines) may be subject to the standards of 40 CFR part 60. Engines that are excluded from the definition of nonroad engine in this part and are not required to be certified to standards under 40 CFR part 60 are not subject to the restrictions on imports in § 1068.301(b), but only if they are properly labeled and there is clear and convincing evidence that each engine will be used in a stationary application (see paragraph (2)(iii) of the definition of ''Nonroad engine''). Section 1068.101 restricts the use of stationary engines for non-stationary purposes unless they are certified under 40 CFR part 60 to the same standards that would apply to nonroad engines for the same model year.

(c) *Hobby engines.* The standard-setting parts exclude engines used in reduced-scale models of vehicles that are not capable of transporting a person.

(d) *Other engines/equipment.* The standard-setting parts may exclude engines/equipment used in certain applications. For example, engines used in aircraft are generally excluded. Engines/equipment used in underground mining are excluded if they are regulated by the Mine Safety and Health Administration.

(e) *Labeling.* For engines/equipment imported under paragraph (a) or (b) of this section, you must add a permanent label, consistent with § 1068.45, with at least the following items unless the standard-setting part includes other specific labeling requirements or we approve alternate label language that is more accurate for your engine/equipment:

(1) Include the heading ''EMISSION CONTROL INFORMATION''.

(2) Include your full corporate name and trademark.

(3) State the engine displacement (in liters or cubic centimeters). We may also require that you include maximum

engine power. If the engine's power is not established, state the approximate power.

(4) State: ''THIS ENGINE IS EXEMPT FROM THE REQUIREMENTS OF [identify the part referenced in § 1068.1(a) that would otherwise apply], AS PROVIDED IN [identify the paragraph authorizing the exemption (for example, ''40 CFR 1068.315(a)'')]. INSTALLING THIS ENGINE IN ANY DIFFERENT APPLICATION MAY BE A VIOLATION OF FEDERAL LAW SUBJECT TO CIVIL PENALTY.''

§ 1068.315 What are the permanent exemptions for imported engines/equipment?

We may approve a permanent exemption from the restrictions on imports under § 1068.301(b) under the following conditions:

(a) *National security exemption*. You may import an engine or piece of equipment under the national security exemption in § 1068.225, but only if it is properly labeled.

(b) *Manufacturer-owned engine/equipment exemption*. You may import manufacturer-owned engines/equipment, as described in § 1068.215.

(c) *Replacement engine exemption*. You may import a nonconforming replacement engine as described in § 1068.240. To use this exemption, you must be a certificate holder for a family we regulate under the same part as the replacement engine.

(d) *Extraordinary circumstances exemption*. You may import a nonconforming engine or piece of equipment if we grant hardship relief as described in § 1068.245.

(e) *Small-volume manufacturer exemption*. You may import a nonconforming engine or piece of equipment if we grant hardship relief for a small-volume manufacturer, as described in § 1068.250.

(f) *Equipment-manufacturer hardship exemption*. You may import a nonconforming engine if we grant an exemption for the transition to new or revised emission standards, as described in § 1068.255.

(g) [Reserved]

(h) *Identical configuration exemption*. Unless specified otherwise in the standard-setting part, you may import nonconforming engines/equipment if they are identical to certified engines/equipment produced by the same manufacturer, subject to the following provisions:

(1) You must meet all the following criteria:

(i) You have owned the engines/equipment for at least six months.

(ii) You agree not to sell, lease, donate, trade, or otherwise transfer ownership of the engines/equipment for at least five years. During this period, the only acceptable way to dispose of the engines/equipment is to destroy or export them.

(iii) You use data or evidence sufficient to show that the engines/equipment are in a configuration that is identical to engines/equipment the original manufacturer has certified to meet emission standards that apply at the time the manufacturer finished assembling or modifying the engines/equipment in question. If you modify the engines/equipment to make them identical, you must completely follow the original manufacturer's written instructions.

(2) We will tell you in writing if we find the information insufficient to show that the engines/equipment are eligible for this exemption. In this case, we will not consider your request further until you address our concerns.

(i) *Ancient engine/equipment exemption*. If you are not the original engine/equipment manufacturer, you may import nonconforming engines/equipment that are subject to a standard-setting part and were first manufactured at least 21 years earlier, as long as they are still in their original configurations.

§ 1068.325 What are the temporary exemptions for imported engines/equipment?

You may import engines/equipment under certain temporary exemptions, subject to the conditions in this section. We may ask U.S. Customs and Border Protection to require a specific bond amount to make sure you comply with the requirements of this subpart. You may not sell or lease one of these engines/equipment while it is in the

United States. You must eventually export the engine/equipment as we describe in this section unless it conforms to a certificate of conformity or it qualifies for one of the permanent exemptions in § 1068.315.

(a) *Exemption for repairs or alterations.* You may temporarily import nonconforming engines/equipment under bond solely for repair or alteration, subject to our advance approval as described in paragraph (j) of this section. You may operate the engine/equipment in the United States only as necessary to repair it, alter it, or ship it to or from the service location. Export the engine/equipment directly after servicing is complete.

(b) *Testing exemption.* You may temporarily import nonconforming engines/equipment under bond for testing if you follow the requirements of § 1068.210, subject to our advance approval as described in paragraph (j) of this section. You may operate the engines/equipment in the United States only as needed to perform tests. This exemption expires one year after you import the engine/equipment unless we approve an extension. The engine/equipment must be exported before the exemption expires.

(c) *Display exemption.* You may temporarily import nonconforming engines/equipment under bond for display if you follow the requirements of § 1068.220, subject to our advance approval as described in paragraph (j) of this section. This exemption expires one year after you import the engine/equipment, unless we approve your request for an extension. We may approve an extension of up to one more year for each request, but no more than three years total. The engine/equipment must be exported by the time the exemption expires or directly after the display concludes, whichever comes first.

(d) *Export exemption.* You may temporarily import nonconforming engines/equipment to export them, as described in § 1068.230. You may operate the engine/equipment in the United States only as needed to prepare it for export. Label the engine/equipment as described in § 1068.230.

(e) *Diplomatic or military exemption.* You may temporarily import nonconforming engines/equipment without bond if you represent a foreign government in a diplomatic or military capacity. In your request to the Designated Compliance Officer (see § 1068.305), include either written confirmation from the U.S. State Department that you qualify for this exemption or a copy of your orders for military duty in the United States. We will rely on the State Department or your military orders to determine when your diplomatic or military status expires, at which time you must export your exempt engines/equipment.

(f) *Delegated-assembly exemption.* You may import a nonconforming engine for final assembly under the provisions of § 1068.261.

(g) *Exemption for partially complete engines.* You may import an engine if another company already has a certificate of conformity and will be modifying the engine to be in its final certified configuration or a final exempt configuration under the provisions of § 1068.262. You may also import a partially complete engine by shipping it from one of your facilities to another under the provisions of § 1068.260(c). If you are importing a used engine that becomes new as a result of importation, you must meet all the requirements that apply to original engine manufacturers under § 1068.262.

(h)–(i) [Reserved]

(j) *Approvals.* For the exemptions in this section requiring our approval, you must send a request to the Designated Compliance Officer before importing the engines/equipment. We will approve your request if you meet all the applicable requirements and conditions. If another section separately requires that you request approval for the exemption, you may combine the information requirements in a single request. Include the following information in your request:

(1) Identify the importer of the engine/equipment and the applicable postal address, e-mail address, and telephone number.

(2) Identify the engine/equipment owner and the applicable postal address, e-mail address, and telephone number.

(3) Identify the engine/equipment by model number (or name), serial number, and original production year.

(4) Identify the specific regulatory provision under which you are seeking an exemption.

(5) Authorize EPA enforcement officers to conduct inspections or testing as allowed under the Clean Air Act.

(6) Include any additional information we specify for demonstrating that you qualify for the exemption.

[73 59344, Oct. 8, 2008, as amended at 74 FR 8428, Feb. 24, 2009; 75 FR 23064, Apr. 30, 2010]

§ 1068.335 What are the penalties for violations?

(a) *All imported engines/equipment.* Unless you comply with the provisions of this subpart, importation of nonconforming engines/equipment violates sections 203 and 213(d) of the Clean Air Act (42 U.S.C. 7522 and 7547(d)). You may then have to export the engines/equipment, pay civil penalties, or both. U.S. Customs and Border Protection may seize unlawfully imported engines and equipment.

(b) *Temporarily imported engines/equipment.* If you do not comply with the provisions of this subpart for a temporary exemption under § 1068.325, you may forfeit the total amount of the bond in addition to the sanctions we identify in paragraph (a) of this section. We will consider an engine or piece of equipment to be exported if it has been destroyed or delivered to U.S. Customs and Border Protection for export or other disposition under applicable Customs laws and regulations. EPA or U.S. Customs and Border Protection may offer you a grace period to allow you to export temporarily exempted engines/equipment without penalty after the exemption expires.

§ 1068.360 What restrictions apply to assigning a model year to imported engines and equipment?

This section includes limitations on assigning a model year to engines and equipment that are imported in a year later than the model year in which they were manufactured, except as specified in paragraph (e) of this section.

(a) The term ''model year'' is defined in each of the standard-setting parts. These definitions may vary slightly to address the different categories of engines and equipment. Except as specified in paragraphs (b) and (c) of this section, the emission standards and other emission-related requirements that apply for an imported engine or piece of equipment are determined by the model year as defined in the applicable standard-setting part and the provisions of 40 CFR 1068.105(a).

(b) This paragraph (b) applies for the importation of new engines and new equipment in any calendar year that is more than one year after the named model year of the engine or equipment when emission control requirements applying to current engines are different than for engines or equipment in the named model year, unless they are imported under special provisions for Independent Commercial Importers as allowed under the standard-setting part. Regardless of what other provisions of this subchapter U specify for the model year of the engine or equipment, such engines and equipment are deemed to have an applicable model year no more than one year earlier than the calendar year in which they are imported. For example, a new engine identified as a 2007 model-year product that is imported on January 31, 2010 will be treated as a 2009 model-year engine; the same engine will be treated as a 2010 model-year engine if it is imported any time in calendar year 2011.

(c) If you claim that an engine or piece of equipment is not subject to standards–or is subject to standards less stringent than those currently in place—based on its original manufacture date because it has already been placed into service, you must provide clear and convincing evidence that it has already been placed into service. Such evidence must generally include, but not be limited to, documentary evidence of purchase and maintenance history and visible wear that is consistent with the reported manufacture date. Importing products for resale or importing more than one engine or piece of equipment at a time would generally require a greater degree of evidence under this paragraph (c). If you do not satisfactorily demonstrate that the engine or equipment has already been

placed into service, the provisions of paragraph (b) of this section apply.

(d) Nothing in this section should be interpreted to allow circumvention of the requirements of this part by misstating or mis-labeling the model year of engines or equipment. For example, this section does not permit engines imported in the same year that they are manufactured to be treated as an engine manufactured in the previous year. To verify compliance with the provisions of this section, we may require you to verify the original manufacture date of the engine or equipment based on manufacturing records, title-transfer documents, service records, or other documentation.

(e) If all the current emission control requirements are the same as in the named model year, the provisions of this section do not apply.

Subpart E—Selective Enforcement Auditing

§ 1068.401 What is a selective enforcement audit?

(a) We may conduct or require you to conduct emission tests on your production engines/equipment in a selective enforcement audit. This requirement is independent of any requirement for you to routinely test production-line engines/equipment. For products subject to equipment-based standards, but tested using engine-based test procedures, this subpart applies to the engines and/or the equipment, as applicable. Otherwise this subpart applies to engines for products subject to engine-based standards and to equipment for products subject to equipment-based standards.

(b) If we send you a signed test order, you must follow its directions and the provisions of this subpart. We may tell you where to test the engines/equipment. This may be where you produce the engines/equipment or any other emission testing facility.

(c) If we select one or more of your families for a selective enforcement audit, we will send the test order to the person who signed the application for certification or we will deliver it in person.

(d) If we do not select a testing facility, notify the Designated Compliance Officer within one working day of receiving the test order where you will test your engines/equipment.

(e) You must do everything we require in the audit without delay.

§ 1068.405 What is in a test order?

(a) In the test order, we will specify the following things:

(1) The family and configuration (if any) we have identified for testing.

(2) The engine/equipment assembly plant, storage facility, or (if you import the engines/equipment) port facility from which you must select engines/equipment.

(3) The procedure for selecting engines/equipment for testing, including a selection rate.

(4) The test procedures, duty cycles, and test points, as appropriate, for testing the engines/equipment to show that they meet emission standards.

(b) We may state that we will select the test engines/equipment.

(c) We may identify alternate families or configurations for testing in case we determine the intended engines/equipment are not available for testing or if you do not produce enough engines/equipment to meet the minimum rate for selecting test engines/equipment.

(d) We may include other directions or information in the test order.

(e) We may ask you to show us that you meet any additional requirements that apply to your engines/equipment (closed crankcases, for example).

(f) In anticipation of a potential audit, you may give us a list of your preferred families and the corresponding assembly plants, storage facilities, or (if you import the engines/equipment) port facilities from which we should select engines/equipment for testing. The information would apply only for a single model year so it would be best to include this information in your application for certification. If you give us this list before we issue a test order, we will consider your recommendations, but we may select different engines/equipment.

(g) If you also do routine production-line testing with the selected family in the same time period, the test order will tell you what changes you might

need to make in your production-line testing schedule.

§ 1068.410 How must I select and prepare my engines/equipment?

(a) *Selecting engines/equipment.* Select engines/equipment as described in the test order. If you are unable to select test engines/equipment this way, you may ask us to approve an alternate plan as long as you make the request before you start selecting engines/equipment.

(b) *Assembling engines/equipment.* Produce and assemble test engines/equipment using your normal production and assembly process for that family.

(1) Notify us directly if you make any change in your production, assembly, or quality control processes that might affect emissions between the time you receive the test order and the time you finish selecting test engines/equipment.

(2) If you do not fully assemble engines/equipment at the specified location, we will describe in the test order how to select components to finish assembling the engines/equipment. Assemble these components onto the test engines/equipment using your documented assembly and quality control procedures.

(c) *Modifying engines/equipment.* Once an engine or piece of equipment is selected for testing, you may adjust, repair, prepare, or modify it or check its emissions only if one of the following is true:

(1) You document the need for doing so in your procedures for assembling and inspecting all your production engines/equipment and make the action routine for all the engines/equipment in the family.

(2) This subpart otherwise allows your action.

(3) We approve your action in advance.

(d) *Engine/equipment malfunction.* If an engine/equipment malfunction prevents further emission testing, ask us to approve your decision to either repair the engine or delete it from the test sequence.

(e) *Setting adjustable parameters.* Before any test, we may adjust or require you to adjust any adjustable parameter to any setting within its physically adjustable range.

(1) [Reserved]

(2) We may make or specify adjustments within the physically adjustable range by considering their effect on emission levels. We may also consider how likely it is that someone will make such an adjustment with in-use engines/equipment.

(f) *Stabilizing emission levels.* (1) Before you test production-line engines/equipment for exhaust emission, you may operate the engine/equipment to stabilize the exhaust emission levels. Using good engineering judgment, operate your engines/equipment in a way that represents the way production engines/equipment will be used. You may operate each engine or piece of equipment for no more than the greater of two periods:

(i) 50 hours.

(ii) The number of hours you operated your emission-data engine/equipment for certifying the family (see 40 CFR part 1065, subpart E).

(2) Use good engineering judgment and follow the standard-setting part to stabilize equipment for evaporative emissions, where appropriate.

(g) *Damage during shipment.* If shipping the engine/equipment to a remote facility for testing under a selective enforcement audit makes necessary an adjustment or repair, you must wait until after the initial emission test to do this work. We may waive this requirement if the test would be impossible or unsafe or if it would permanently damage the engine/equipment. Report to us, in your written report under § 1068.450, all adjustments or repairs you make on test engines/equipment before each test.

(h) *Shipping engines/equipment.* If you need to ship engines/equipment to another facility for testing, make sure the test engines/equipment arrive at the test facility within 24 hours after being selected. You may ask that we allow more time if you are unable to do this.

(i) *Retesting after invalid tests.* You may retest an engine or piece of equipment if you determine an emission test is invalid under the standard-setting part. Explain in your written report reasons for invalidating any test and

the emission results from all tests. If you retest an engine or piece of equipment and, within ten days after testing, ask to substitute results of the new tests for the original ones, we will answer within ten days after we receive your information.

(j) *Retesting after reaching a fail decision.* You may retest your engines/equipment once a fail decision for the audit has been reached based on the first test on each engine or piece of equipment under §1068.420(c). You may test each engine or piece of equipment up to a total of three times, but you must perform the same number of tests on each engine or piece of equipment. You may further operate the engine/equipment to stabilize emission levels before testing, subject to the provisions of paragraph (f) of this section. We may approve retesting at other times if you send us a request with satisfactory justification.

[73 59344, Oct. 8, 2008, as amended at 75 FR 23064, Apr. 30, 2010]

§ 1068.415 How do I test my engines/equipment?

(a) Use the test procedures specified in the standard-setting part for showing that your engines/equipment meet emission standards. The test order will give further testing instructions.

(b) If no test cells are available at a given facility, you may make alternate testing arrangements with our approval.

(c) Test at least two engines/equipment in each 24-hour period (including void tests). However, if your projected U.S. nonroad sales within the family are less than 7,500 for the year, you may test a minimum of one per 24-hour period. If you request and justify it, we may approve a lower testing rate.

(d) For exhaust emissions, accumulate service on test engines/equipment at a minimum rate of 6 hours per engine or piece of equipment during each 24-hour period. The first 24-hour period for service accumulation begins when you finish preparing an engine or piece of equipment for testing. The minimum service accumulation rate does not apply on weekends or holidays. You may ask us to approve a lower service accumulation rate. We may require you to accumulate hours more rapidly than the minimum rate, as appropriate. Plan your service accumulation to allow testing at the rate specified in paragraph (c) of this section. Select operation for accumulating operating hours on your test engines/equipment to represent normal in-use operation for the family.

(e) Test engines/equipment in the same order you select them.

§ 1068.420 How do I know when my engine family fails an SEA?

(a) A failed engine or piece of equipment is one whose final deteriorated test results exceed an applicable emission standard for any regulated pollutant.

(b) Continue testing engines/equipment until you reach a pass decision for all pollutants or a fail decision for one pollutant.

(c) You reach a pass decision for the SEA requirements when the number of failed engines/equipment is less than or equal to the pass decision number in Appendix A to this subpart for the total number of engines/equipment tested. You reach a fail decision for the SEA requirements when the number of failed engines/equipment is greater than or equal to the fail decision number in Appendix A to this subpart for the total number of engines/equipment you test. An acceptable quality level of 40 percent is the basis for the pass or fail decision.

(d) Consider test results in the same order as the engine/equipment testing sequence.

(e) If you reach a pass decision for one pollutant, but need to continue testing for another pollutant, we will disregard these later test results for the pollutant with the pass decision.

(f) Appendix A to this subpart lists multiple sampling plans. Use the sampling plan for the projected sales volume you reported in your application for the audited family.

(g) We may choose to stop testing after any number of tests.

(h) If we test some of your engines/equipment in addition to your own testing, we may decide not to include your test results as official data for those engines/equipment if there is substantial disagreement between your

testing and our testing. We will reinstate your data as valid if you show us that we made an error and your data are correct.

(i) If we rely on our test data instead of yours, we will notify you in writing of our decision and the reasons we believe your facility is not appropriate for doing the tests we require under this subpart. You may request in writing that we consider your test results from the same facility for future testing if you show us that you have made changes to resolve the problem.

§ 1068.425 What happens if one of my production-line engines/equipment exceeds the emission standards?

(a) If one of your production-line engines/equipment fails to meet one or more emission standards (see § 1068.420), the certificate of conformity is automatically suspended for that engine or piece of equipment. You must take the following actions before your certificate of conformity can cover that engine or piece of equipment:

(1) Correct the problem and retest the engine/equipment to show it complies with all emission standards.

(2) Include in your written report a description of the test results and the remedy for each engine or piece of equipment (see § 1068.450).

(b) You may ask for a hearing at any time to determine whether the tests and sampling methods were proper (see subpart G of this part).

§ 1068.430 What happens if a family fails an SEA?

(a) We may suspend your certificate of conformity for a family if it fails the SEA under § 1068.420. The suspension may apply to all facilities producing engines/equipment from a family even if you find noncompliant engines/equipment only at one facility.

(b) We will tell you in writing if we suspend your certificate in whole or in part. We will not suspend a certificate until at least 15 days after the family fails the SEA. The suspension is effective when you receive our notice.

(c) You may ask for a hearing to determine whether the tests and sampling methods were proper (see subpart G of this part) up to 15 days after we suspend the certificate for a family. If we agree that we used erroneous information in deciding to suspend the certificate before a hearing is held, we will reinstate the certificate.

§ 1068.435 May I sell engines/equipment from a family with a suspended certificate of conformity?

You may sell engines/equipment that you produce after we suspend the family's certificate of conformity only if one of the following occurs:

(a) You test each engine or piece of equipment you produce and show it complies with emission standards that apply.

(b) We conditionally reinstate the certificate for the family. We may do so if you agree to recall all the affected engines/equipment and remedy any noncompliance at no expense to the owner if later testing shows that engines/equipment in the family still do not comply.

§ 1068.440 How do I ask EPA to reinstate my suspended certificate?

(a) Send us a written report asking us to reinstate your suspended certificate. In your report, identify the reason for the SEA failure, propose a remedy, and commit to a date for carrying it out. In your proposed remedy include any quality control measures you propose to keep the problem from happening again.

(b) Give us test data from production engines/equipment showing that engines/equipment in the remedied family comply with all the emission standards that apply.

[73 59344, Oct. 8, 2008, as amended at 75 FR 23064, Apr. 30, 2010]

§ 1068.445 When may EPA revoke my certificate under this subpart and how may I sell these engines/equipment again?

(a) We may revoke your certificate for a family in the following cases:

(1) You do not meet the reporting requirements under this subpart.

(2) Your family fails an SEA and your proposed remedy to address a suspended certificate is inadequate to solve the problem or requires you to change the engine/equipment's design or emission control system.

(b) To sell engines/equipment from a family with a revoked certificate of conformity, you must modify the family and then show it complies with the applicable requirements.

(1) If we determine your proposed design change may not control emissions for the engine/equipment's full useful life, we will tell you within five working days after receiving your report. In this case we will decide whether production-line testing will be enough for us to evaluate the change or whether you need to do more testing.

(2) Unless we require more testing, you may show compliance by testing production-line engines/equipment as described in this subpart.

(3) We will issue a new or updated certificate of conformity when you have met these requirements.

§ 1068.450 What records must I send to EPA?

(a) Within 30 days of the end of each audit, send us a report with the following information:

(1) Describe any facility used to test production-line engines/equipment and state its location.

(2) State the total U.S.-directed production volume and number of tests for each family.

(3) Describe your test engines/equipment, including the family's identification and the engine/equipment's model year, build date, model number, identification number, and number of hours of operation before testing for each test engine or piece of equipment.

(4) Identify where you accumulated hours of operation on the engines/equipment and describe the procedure and schedule you used.

(5) Provide the test number; the date, time and duration of testing; test procedure; initial test results before and after rounding; final test results; and final deteriorated test results for all tests. Provide the emission figures for all measured pollutants. Include information for both valid and invalid tests and the reason for any invalidation.

(6) Describe completely and justify any nonroutine adjustment, modification, repair, preparation, maintenance, or test for the test engine/equipment if you did not report it separately under this subpart. Include the results of any emission measurements, regardless of the procedure or type of equipment.

(7) Report on each failed engine or piece of equipment as described in § 1068.425.

(b) We may ask you to add information to your written report, so we can determine whether your new engines/equipment conform with the requirements of this subpart.

(c) An authorized representative of your company must sign the following statement: We submit this report under Sections 208 and 213 of the Clean Air Act. Our testing conformed completely with the requirements of 40 CFR part 1068. We have not changed production processes or quality-control procedures for the family in a way that might affect the emission control from production engines/equipment. All the information in this report is true and accurate to the best of my knowledge. I know of the penalties for violating the Clean Air Act and the regulations. (Authorized Company Representative)

(d) Send reports of your testing to the Designated Compliance Officer using an approved information format. If you want to use a different format, send us a written request with justification for a waiver.

(e) We may post test results on publicly accessible databases and we will send copies of your reports to anyone from the public who asks for them. We will not release information about your sales or production volumes, which is all we will consider confidential.

§ 1068.455 What records must I keep?

(a) We may review your records at any time so it is important to keep required information readily available. Organize and maintain your records as described in this section.

(b) Keep paper records for testing under this subpart for one full year after you complete all the testing required for the selective enforcement audit. For additional storage, you may use any format or media.

(c) Keep a copy of the written reports described in § 1068.450.

(d) Keep the following additional records:

(1) The names of supervisors involved in each test.

(2) The name of anyone who authorizes adjusting, repairing, preparing, or modifying a test engine/equipment and the names of all supervisors who oversee this work.

(3) If you shipped the engine/equipment for testing, the date you shipped it, the associated storage or port facility, and the date the engine/equipment arrived at the testing facility.

(4) Any records related to your audit that are not in the written report.

(5) A brief description of any significant events during testing not otherwise described in the written report or in this section.

(e) If we ask, you must give us projected or actual production for a family. Include each assembly plant if you produce engines/equipment at more than one plant.

(f) We may ask you to keep or send other information necessary to implement this subpart.

APPENDIX A TO SUBPART E OF PART 1068—PLANS FOR SELECTIVE ENFORCEMENT AUDITING

The following tables describe sampling plans for selective enforcement audits, as described in §1068.420:

TABLE A–1—SAMPLING PLAN CODE LETTER

Projected family sales	Code letter [1]	Minimum number of tests		Maximum number of tests
		To pass	To fail	
20–50	AA	3	5	20
20–99	A	4	6	30
100–299	B	5	6	40
300–499	C	5	6	50
500 +	D	5	6	60

[1] A manufacturer may optionally use either the sampling plan for code letter ''AA'' or sampling plan for code letter ''A'' for Selective Enforcement Audits of families with annual sales between 20 and 50 engines/equipment. Additionally, the manufacturer may switch between these plans during the audit.

TABLE A–2—SAMPLING PLANS FOR DIFFERENT ENGINE FAMILY SALES VOLUMES

Stage [a]	AA		A		B		C		D	
	Pass #	Fail #	Pass #	Fail #	Pass #	Fail #	Pass #	Fail #	Pass #	Fail #
1	.....	.....	.....	.....	.....	.....	.....	.....	.....	
2	.....	.....	.....	.....	.....	.....	.....	.....	.....	
3	0	.....	.....	.....	.....	.....	.....	.....	.....	
4	0	.....	0	.....	.....	.....	.....	.....	.....	
5	1	5	0	.....	0	.....	0	.....	0	
6	1	6	1	6	1	6	0	6	0	6
7	2	6	1	7	1	7	1	7	1	7
8	2	7	2	7	2	7	2	7	2	8
9	3	7	2	8	2	8	2	8	2	8
10	3	8	3	8	3	8	3	9	3	9
11	4	8	3	8	3	9	3	9	3	9
12	4	9	4	9	4	9	4	10	4	10
13	5	9	5	10	4	10	4	10	4	10
14	5	10	5	10	5	10	5	11	5	11
15	6	10	6	11	5	11	5	11	5	11
16	6	10	6	11	6	12	6	12	6	12
17	7	10	7	12	6	12	6	12	6	12
18	8	10	7	12	7	13	7	13	7	13
19	8	10	8	13	8	13	7	13	7	13
20	9	10	8	13	8	14	8	14	8	14
21	.....	.....	9	14	9	14	8	14	8	14
22	.....	.....	10	14	9	15	9	15	9	15
23	.....	.....	10	15	10	15	10	15	9	15
24	.....	.....	11	15	10	16	10	16	10	16
25	.....	.....	11	16	11	16	11	16	11	16
26	.....	.....	12	16	11	17	11	17	11	17
27	.....	.....	12	17	12	17	12	17	12	17
28	.....	.....	13	17	12	18	12	18	12	18
29	.....	.....	14	17	13	18	13	18	13	19
30	.....	.....	16	17	13	19	13	19	13	19
31	.....	.....	.....	.....	14	19	14	19	14	20
32	.....	.....	.....	.....	14	20	14	20	14	20
33	.....	.....	.....	.....	15	20	15	20	15	21

TABLE A–2—SAMPLING PLANS FOR DIFFERENT ENGINE FAMILY SALES VOLUMES—Continued

Stage [a]	AA		A		B		C		D	
	Pass #	Fail #	Pass #	Fail #	Pass #	Fail #	Pass #	Fail #	Pass #	Fail #
34	.....	.....	.....	.....	16	21	15	21	15	21
35	.....	.....	.....	.....	16	21	16	21	16	22
36	.....	.....	.....	.....	17	22	16	22	16	22
37	.....	.....	.....	.....	17	22	17	22	17	23
38	.....	.....	.....	.....	18	22	18	23	17	23
39	.....	.....	.....	.....	18	22	18	23	18	24
40	.....	.....	.....	.....	21	22	19	24	18	24
41	.....	.....	.....	.....	.....	.....	19	24	19	25
42	.....	.....	.....	.....	.....	.....	20	25	19	26
43	.....	.....	.....	.....	.....	.....	20	25	20	26
44	.....	.....	.....	.....	.....	.....	21	26	21	27
45	.....	.....	.....	.....	.....	.....	21	27	21	27
46	.....	.....	.....	.....	.....	.....	22	27	22	28
47	.....	.....	.....	.....	.....	.....	22	27	22	28
48	.....	.....	.....	.....	.....	.....	23	27	23	29
49	.....	.....	.....	.....	.....	.....	23	27	23	29
50	.....	.....	.....	.....	.....	.....	26	27	24	30
51	.....	.....	.....	.....	.....	.....	.....	.....	24	30
52	.....	.....	.....	.....	.....	.....	.....	.....	25	31
53	.....	.....	.....	.....	.....	.....	.....	.....	25	31
54	.....	.....	.....	.....	.....	.....	.....	.....	26	32
55	.....	.....	.....	.....	.....	.....	.....	.....	26	32
56	.....	.....	.....	.....	.....	.....	.....	.....	27	33
57	.....	.....	.....	.....	.....	.....	.....	.....	27	33
58	.....	.....	.....	.....	.....	.....	.....	.....	28	33
59	.....	.....	.....	.....	.....	.....	.....	.....	28	33
60	.....	.....	.....	.....	.....	.....	.....	.....	32	33

[a] Stage refers to the cumulative number of engines/equipment tested.

Subpart F—Reporting Defects and Recalling Engines/Equipment

§ 1068.501 How do I report emission-related defects?

This section addresses the certificate holder's responsibility to investigate and report emission-related defects in design, materials, or workmanship. The provisions of this section do not limit your liability under this part or the Clean Air Act. For example, selling an engine/equipment that does not conform to your application for certification is a violation of § 1068.101(a)(1) independent of the requirements of this section. The requirements of this section apply separately to each certificate holder if there is more than one certificate holder for the equipment.

(a) *General provisions.* As a certifying manufacturer, you must investigate in certain circumstances whether engines/equipment that have been introduced into U.S. commerce under your certificate have incorrect, improperly installed, or otherwise defective emission-related components or systems. This includes defects in design, materials, or workmanship. You must also send us reports as specified by this section.

(1) This section addresses defects for any of the following emission-related components or systems containing the following components:

(i) Electronic control units, aftertreatment devices, fuel-metering components, EGR-system components, crankcase-ventilation valves, all components related to charge-air compression and cooling, and all sensors associated with any of these components.

(ii) For engines and equipment subject to evaporative emission standards, fuel tanks, fuel caps, and fuel lines and connectors.

(iii) Any other component whose primary purpose is to reduce emissions.

(iv) Any other component whose failure might increase emissions of any regulated pollutant without significantly degrading engine/equipment performance.

(2) The requirements of this section relate to defects in any of the components or systems identified in paragraph (a)(1) of this section if the defects might affect any of the parameters or specifications in Appendix II of this part or might otherwise affect the emissions of any regulated pollutant.

(3) For the purposes of this section, defects do not include damage to emission-related components or systems (or maladjustment of parameters) caused by owners improperly maintaining or abusing their engines/equipment.

(4) The requirements of this section do not apply to emission control information labels. Note however, that § 1068.101(a)(1) prohibits the sale of engines/equipment without proper labels, which also applies to misprinted labels.

(5) You must track the information specified in paragraph (b)(1) of this section. You must assess this data at least every three months to evaluate whether you exceed the thresholds specified in paragraphs (e) and (f) of this section. Where thresholds are based on a percentage of engines/equipment in the family, use actual U.S.-directed production volumes for the whole model year when they become available. Use projected production figures until the actual production figures become available. You are not required to collect additional information other than that specified in paragraph (b)(1) of this section before reaching a threshold for an investigation specified in paragraph (e) of this section.

(6) You may ask us to allow you to use alternate methods for tracking, investigating, reporting, and correcting emission-related defects. In your request, explain and demonstrate why you believe your alternate system will be at least as effective in the aggregate in tracking, identifying, investigating, evaluating, reporting, and correcting potential and actual emissions-related defects as the requirements in this section. In this case, provide all available data necessary to demonstrate why an alternate system is appropriate for your engines/equipment and how it will result in a system at least as effective as that required under this section.

(7) If we determine that emission-related defects result in a substantial number of properly maintained and used engines/equipment not conforming to the regulations of this chapter during their useful life, we may order you to conduct a recall of your engines/equipment (see § 1068.505).

(8) Send all reports required by this section to the Designated Enforcement Officer.

(9) This section distinguishes between defects and possible defects. A possible defect exists anytime there is an indication that an emission-related component or system might have a defect, as described in paragraph (b)(1) of this section.

(b) *Investigation of possible defects.* Investigate possible defects as follows:

(1) If the number of engines/equipment that have a possible defect, as defined by this paragraph (b)(1), exceeds a threshold specified in paragraph (e) of this section, you must conduct an investigation to determine if an emission-related component or system is actually defective. You must classify an engine/equipment component or system as having a possible defect if any of the following sources of information shows there is a significant possibility that a defect exists:

(i) A warranty claim is submitted for the component, whether this is under your emission-related warranty or any other warranty.

(ii) Your quality-assurance procedures suggest that a defect may exist.

(iii) You receive any other information for which good engineering judgment would indicate the component or system may be defective, such as information from dealers, field-service personnel, equipment manufacturers, hotline complaints, or engine diagnostic systems.

(2) If the number of shipped replacement parts for any individual component is high enough that good engineering judgment would indicate a significant possibility that a defect exists, you must conduct an investigation to determine if it is actually defective. Note that this paragraph (b)(2) does not require data-tracking or recording provisions related to shipment of replacement parts.

(3) Your investigation must be prompt, thorough, consider all relevant information, follow accepted scientific

and engineering principles, and be designed to obtain all the information specified in paragraph (d) of this section.

(4) Your investigation needs to consider possible defects that occur only within the useful life period, or within five years after the end of the model year, whichever is longer.

(5) You must continue your investigation until you are able to show that there is no emission-related defect or you obtain all the information specified for a defect report in paragraph (d) of this section.

(6) If a component with a possible defect is used in additional families or model years, you must investigate whether the component may be defective when used in these additional families or model years, and include these results in any defect report you send under paragraph (c) of this section.

(7) If your initial investigation concludes that the number of engines/equipment with a defect is fewer than any of the thresholds specified in paragraph (f) of this section, but other information later becomes available that may show that the number of engines/equipment with a defect exceeds a threshold, then you must resume your investigation. If you resume an investigation, you must include the information from the earlier investigation to determine whether to send a defect report.

(c) *Reporting defects.* You must send us a defect report in either of the following cases:

(1) Your investigation shows that the number of engines/equipment with a defect exceeds a threshold specified in paragraph (f) of this section. Send the defect report within 21 days after the date you identify this number of defective engines/equipment. See paragraph (h) of this section for reporting requirements that apply if the number of engines/equipment with a defect does not exceed any of the thresholds in paragraph (f) of this section.

(2) You know there are emission-related defects for a component or system in a number of engines/equipment that exceeds a threshold specified in paragraph (f) of this section, regardless of how you obtain this information. Send the defect report within 21 days after you learn that the number of defects exceeds a threshold. Send us an updated defect report anytime you have significant additional information.

(d) *Contents of a defect report.* Include the following information in a defect report:

(1) Your corporate name and a person to contact regarding this defect.

(2) A description of the defect, including a summary of any engineering analyses and associated data, if available.

(3) A description of the engines/equipment that have the defect, including families, models, and range of production dates.

(4) An estimate of the number and percentage of each class or category of affected engines/equipment that have the defect, and an explanation of how you determined this number. Describe any statistical methods you used under paragraph (g)(6) of this section.

(5) An estimate of the defect's impact on emissions, with an explanation of how you calculated this estimate and a summary of any emission data demonstrating the impact of the defect, if available.

(6) A description of your plan for addressing the defect or an explanation of your reasons for not believing the defects must be addressed.

(e) *Thresholds for conducting a defect investigation.* You must begin a defect investigation based on the following number of engines/equipment that may have the defect:

(1) For engines/equipment with maximum engine power at or below 560 kW:

(i) For families with annual production below 500 units: 50 or more engines/equipment.

(ii) For families with annual production from 500 to 50,000 units: more than 10.0 percent of the total number of engines/equipment in the family.

(iii) For families with annual production from 50,000 to 550,000 units: more than the total number of engines/equipment represented by the following equation:

$$\text{Investigation threshold} = 5{,}000 + (\text{Production units} - 50{,}000) \times 0.04$$

(iv) For families with annual production above 550,000 units: 25,000 or more engines/equipment.

(2) For engines/equipment with maximum engine power greater than 560 kW:

(i) For families with annual production below 250 units: 25 or more engines/equipment.

(ii) For families with annual production at or above 250 units: more than 10.0 percent of the total number of engines/equipment in the family.

(f) *Thresholds for filing a defect report.* You must send a defect report based on the following number of engines/equipment that have the defect:

(1) For engines/equipment with maximum engine power at or below 560 kW:

(i) For families with annual production below 1,000 units: 20 or more engines/equipment.

(ii) For families with annual production from 1,000 to 50,000 units: more than 2.0 percent of the total number of engines/equipment in the family.

(iii) For families with annual production from 50,000 to 550,000 units: more than the total number of engines/equipment represented by the following equation:

Reporting threshold = 1,000 + (Production units—50,000) × 0.01

(iv) For families with annual production above 550,000 units: 6,000 or more engines/equipment.

(2) For engines/equipment with maximum engine power greater than 560 kW:

(i) For families with annual production below 150 units: 10 or more engines/equipment.

(ii) For families with annual production from 150 to 750 units: 15 or more engines/equipment.

(iii) For families with annual production above 750 units: more than 2.0 percent of the total number of engines/equipment in the family.

(g) *How to count defects.* (1) Track defects separately for each model year and family as much as possible. If information is not identifiable by model year or family, use good engineering judgment to evaluate whether you exceed a threshold in paragraph (e) or

(f) of this section. Consider only your U.S.-directed production volume.

(2) Within a family, track defects together for all components or systems that are the same in all material respects. If multiple companies separately supply a particular component or system, treat each company's component or system as unique.

(3) For engine-based standards, if a possible defect is not attributed to any specific part of the engine, consider the complete engine a distinct component for evaluating whether you exceed a threshold in paragraph (e) of this section. For equipment-based standards, if a possible defect is not attributed to any specific part of the equipment, consider the complete piece of equipment a distinct component for evaluating whether you exceed a threshold in paragraph (e) of this section.

(4) If you correct defects before they reach the ultimate purchaser as a result of your quality-assurance procedures, count these against the investigation thresholds in paragraph (e) of this section unless you routinely check every engine or piece of equipment in the family. Do not count any corrected defects as actual defects under paragraph (f) of this section.

(5) Use aggregated data from all the different sources identified in paragraph (b)(1) of this section to determine whether you exceed a threshold in paragraphs (e) and (f) of this section.

(6) If information is readily available to conclude that the possible defects identified in paragraph (b)(1) of this section are actual defects, count these toward the reporting thresholds in paragraph (f) of this section.

(7) During an investigation, use appropriate statistical methods to project defect rates for engines/equipment that you are not otherwise able to evaluate. For example, if 75 percent of the components replaced under warranty are available for evaluation, it would be appropriate to extrapolate known information on failure rates to the components that are unavailable for evaluation. Take steps as necessary to prevent bias in sampled data. Make adjusted calculations to take into account any bias that may remain.

(h) *Investigation reports.* Once you trigger an investigation threshold under paragraph (e) of this section, you must report your progress and conclusions. In your reports, include the information specified in paragraph (d) of

this section, or explain why the information is not relevant. Send us the following reports:

(1) While you are investigating, send us mid-year and end-of-year reports to describe the methods you are using and the status of the investigation. Send these status reports no later than June 30 and December 31 of each year.

(2) If you find that the number of components or systems with an emission-related defect exceeds a threshold specified in paragraph (f) of this section, send us a report describing your findings within 21 days after the date you reach this conclusion.

(3) If you find that the number of components or systems with an emission-related defect does not exceed any of the thresholds specified in paragraph (f) of this section, send us a final report supporting this conclusion. For example, you may exclude warranty claims that resulted from misdiagnosis and you may exclude defects caused by improper maintenance, improper use, or misfueling. Send this report within 21 days after the date you reach this conclusion.

(i) *Future production*. If you identify a design or manufacturing defect that prevents engines/equipment from meeting the requirements of this part, you must correct the defect as soon as possible for future production of engines/equipment in every family affected by the defect. This applies without regard to whether you are required to conduct a defect investigation or submit a defect report under this section.

[73 59344, Oct. 8, 2008, as amended at 75 FR 23064, Apr. 30, 2010]

§ 1068.505 How does the recall program work?

(a) If we make a determination that a substantial number of properly maintained and used engines/equipment do not conform to the regulations of this chapter during their useful life, you must submit a plan to remedy the nonconformity of your engines/equipment. We will notify you of our determination in writing. Our notice will identify the class or category of engines/equipment affected and describe how we reached our conclusion. If this happens, you must meet the requirements and follow the instructions in this subpart. You must remedy at your expense noncompliant engines/equipment that have been properly maintained and used, as described in § 1068.510(a)(7). You may not transfer this expense to a dealer (or equipment manufacturer for engine-based standards) through a franchise or other agreement.

(b) You may ask for a hearing if you disagree with our determination (see subpart G of this part).

(c) Unless we withdraw the determination of noncompliance, you must respond to it by sending a remedial plan to the Designated Compliance Officer by the later of these two deadlines:

(1) Within 60 days after we notify you.

(2) Within 60 days after a hearing.

(d) Once you have sold engines/equipment to the ultimate purchaser, we may inspect or test the engines/equipment only if the purchaser permits it, or if state or local inspection programs separately provide for it.

(e) You may ask us to allow you to conduct your recall differently than specified in this subpart, consistent with section 207(c) of the Clean Air Act (42 U.S.C. 7541(c)).

(f) You may do a voluntary recall under § 1068.535 unless we have made the determination described in § 1068.535(a).

(g) For purposes of recall, owner means someone who owns an engine or piece of equipment affected by a remedial plan.

§ 1068.510 How do I prepare and apply my remedial plan?

(a) In your remedial plan, describe all of the following:

(1) The class or category of engines/equipment to be recalled, including the number of engines/equipment involved and the model year or other information needed to identify the engines/equipment.

(2) The modifications, alterations, repairs, corrections, adjustments, or other changes you will make to correct the affected engines/equipment.

(3) A brief description of the studies, tests, and data that support the effectiveness of the remedy you propose to use.

(4) The instructions you will send to those who will repair the engines/equipment under the remedial plan.

(5) How you will determine the owners' names and addresses.

(6) How you will notify owners; include copies of any notification letters.

(7) The proper maintenance or use you will specify, if any, as a condition to be eligible for repair under the remedial plan. Describe how these specifications meet the provisions of paragraph (e) of this section. Describe how the owners should show they meet your conditions.

(8) The steps owners must take for you to do the repair. You may set a date or a range of dates, specify the amount of time you need, and designate certain facilities to do the repairs.

(9) Which company (or group) you will assign to do or manage the repairs.

(10) If your employees or authorized warranty agents will not be doing the work, state who will and describe their qualifications.

(11) How you will ensure an adequate and timely supply of parts.

(12) The effect of proposed changes on fuel consumption, driveability, and safety of the engines/equipment you will recall; include a brief summary of the information supporting these conclusions.

(13) How you intend to label the engines/equipment you repair and where you will place the label on the engine/equipment (see § 1068.515).

(b) We may require you to add information to your remedial plan.

(c) We may require you to test the proposed repair to show it will remedy the noncompliance.

(d) Use all reasonable means to locate owners. We may require you to use government or commercial registration lists to get owners' names and addresses so your notice will be effective.

(e) The maintenance or use that you specify as a condition for eligibility under the remedial plan may include only things you can show would cause noncompliance. Do not require use of a component or service identified by brand, trade, or corporate name unless we approved this approach with your original certificate of conformity. Also, do not place conditions on who maintained the engine/equipment.

(f) We may require you to adjust your repair plan if we determine owners would be without their engines or equipment for an unreasonably long time.

(g) We will tell you in writing within 15 days of receiving your remedial plan whether we have approved or disapproved it. We will explain our reasons for any disapproval.

(h) Begin notifying owners within 15 days after we approve your remedial plan. If we hold a hearing, but do not change our position about the noncompliance, you must begin notifying owners within 60 days after we complete the hearing unless we specify otherwise.

§ 1068.515 How do I mark or label repaired engines/equipment?

(a) Attach a label to engines/equipment you repair under the remedial plan. At your discretion, you may label or mark engines/equipment you inspect but do not repair.

(b) Make the label from a durable material suitable for its planned location. Make sure no one can remove the label without destroying or defacing it.

(c) On the label, designate the specific recall campaign and state where you repaired or inspected the engine/equipment.

(d) We may waive or modify the labeling requirements if we determine they are overly burdensome.

§ 1068.520 How do I notify affected owners?

(a) Notify owners by first class mail or e-mail unless we say otherwise. We may require you to use certified mail. Include the following in your notice:

(1) State: ''The U.S. Environmental Protection Agency has determined that your engine/equipment may be emitting pollutants in excess of the federal emission standards as defined in Title 40 of the Code of Federal Regulations. These emission standards were established to protect the public health or welfare from air pollution.''

(2) State that you (or someone you designate) will repair these engines/equipment at your expense.

(3) If we approved maintenance and use conditions in your remedial plan, state that you will make these repairs only if owners show their engines/equipment meet the conditions for proper maintenance and use. Describe these conditions and how owners should prove their engines/equipment are eligible for repair.

(4) Describe the components your repair will affect and say generally how you will repair the engines/equipment.

(5) State that the engine/equipment, if not repaired, may fail an emission inspection test if state or local law requires one.

(6) Describe any adverse effects on its performance or driveability that would be caused by not repairing the engine/equipment.

(7) Describe any adverse effects on the functions of other components that would be caused by not repairing the engine/equipment.

(8) Specify the date you will start the repairs, the amount of time you will need to do them, and where you will do them. Include any other information owners may need to know.

(9) Allow for the owner to inform you using one of the following methods if they have sold the engine/equipment:

(i) Send a self-addressed card that owners can mail back to you; include a space for owners to write the name and address of a buyer.

(ii) Provide owners with a toll-free number and an e-mail address or Web site they can use to identify the name and address of a buyer.

(10) State that owners should call you at a phone number you give to report any difficulty in obtaining repairs.

(11) State: ''To ensure your full protection under the emission warranty on your [engine/equipment] by federal law, and your right to participate in future recalls, we recommend you have your [engine/equipment] serviced as soon as possible. We may consider your not servicing it to be improper maintenance.''

(b) We may require you to add information to your notice or to send more notices.

(c) You may not in any communication with owners or dealers say or imply that your noncompliance does not exist or that it will not degrade air quality.

§ 1068.525 What records must I send to EPA?

(a) Send us a copy of all communications related to the remedial plan you sent to dealers and others doing the repairs. Mail or e-mail us the information at the same time you send it to others.

(b) From the time you begin to notify owners, send us a report within 25 days of the end of each calendar quarter. Send reports for six consecutive quarters or until all the engines/equipment are inspected, whichever comes first. In these reports, identify the following:

(1) The range of dates you needed to notify owners.

(2) The total number of notices sent.

(3) The number of engines/equipment you estimate fall under the remedial plan (explain how you determined this number).

(4) The cumulative number of engines/equipment you inspected under the remedial plan.

(5) The cumulative number of these engines/equipment you found needed the specified repair.

(6) The cumulative number of these engines/equipment you have repaired.

(7) The cumulative number of engines/equipment you determined to be unavailable due to exportation, theft, retirement, or other reasons (specify).

(8) The cumulative number of engines/equipment you disqualified for not being properly maintained or used.

(c) If your estimated number of engines/equipment falling under the remedial plan changes, change the estimate in your next report and add an explanation for the change.

(d) We may ask for more information.

(e) We may waive reporting requirements or adjust the reporting schedule.

(f) If anyone asks to see the information in your reports, we will follow the provisions of § 1068.10 for handling confidential information.

§ 1068.530 What records must I keep?

We may review your records at any time so it is important that you keep required information readily available. Keep records associated with your recall campaign for three years after you

send the last report we require under §1068.525(b). Organize and maintain your records as described in this section.

(a) Keep a paper copy of the written reports described in §1068.525.

(b) Keep a record of the names and addresses of owners you notified. For each engine or piece of equipment, state whether you did any of the following:

(1) Inspected the engine/equipment.

(2) Disqualified the engine/equipment for not being properly maintained or used.

(3) Completed the prescribed repairs.

(c) You may keep the records in paragraph (b) of this section in any form we can inspect, including computer databases.

§1068.535 How can I do a voluntary recall for emission-related problems?

If we have made a determination that a substantial number of properly maintained and used engines/equipment do not conform to the regulations of this chapter during their useful life, you may not use a voluntary recall or other alternate means to meet your obligation to remedy the noncompliance. Thus, this section applies only if you learn that your family does not meet the requirements of this chapter and we have not made such a determination.

(a) To do a voluntary recall under this section, first send the Designated Compliance Officer a plan, following the guidelines in §1068.510. Within 15 days, we will send you our comments on your plan.

(b) Once we approve your plan, start notifying owners and carrying out the specified repairs. Make reasonable efforts to carry out the recall as quickly as possible.

(c) From the time you start the recall campaign, send us a report within 25 days of the end of each calendar quarter, following the guidelines in §1068.525(b). Send reports for six consecutive quarters or until all the engines/equipment are inspected, whichever comes first.

(d) Keep your reports and the supporting information as described in §1068.530.

Subpart G—Hearings

§1068.601 What are the procedures for hearings?

If we agree to hold a hearing related to our decision to order a recall under §1068.505, we will hold the hearing according to the provisions of 40 CFR 85.1807. For any other issues, you may request an informal hearing as described in 40 CFR 86.1853–01.

APPENDIX I TO PART 1068—EMISSION-RELATED COMPONENTS

This appendix specifies emission-related components that we refer to for describing such things as emission-related warranty or requirements related to rebuilding engines. Note that inclusion of a component in Section III of this Appendix does not make it an emission-related component for engines/equipment that are not subject to evaporative emission standards.

I. For exhaust emissions, emission-related components include any engine parts related to the following systems:

1. Air-induction system.
2. Fuel system.
3. Ignition system.
4. Exhaust gas recirculation systems.

II. The following parts are also considered emission-related components for exhaust emissions:

1. Aftertreatment devices.
2. Crankcase ventilation valves.
3. Sensors.
4. Electronic control units.

III. The following parts are considered emission-related components for evaporative emissions:

1. Fuel Tank.
2. Fuel Cap.
3. Fuel Line.
4. Fuel Line Fittings.
5. Clamps*.
6. Pressure Relief Valves*.
7. Control Valves*.
8. Control Solenoids*.
9. Electronic Controls*.
10. Vacuum Control Diaphragms*.
11. Control Cables*.
12. Control Linkages*.
13. Purge Valves.
14. Vapor Hoses.
15. Liquid/Vapor Separator.
16. Carbon Canister.
17. Canister Mounting Brackets.
18. Carburetor Purge Port Connector.

*As related to the evaporative emission control system.

IV. Emission-related components also include any other part whose only purpose is to reduce emissions or whose failure will increase emissions without significantly degrading engine/equipment performance.

APPENDIX II TO PART 1068—EMISSION-RELATED PARAMETERS AND SPECIFICATIONS

This appendix specifies emission-related parameters and specifications that we refer to for describing such things as emission-related defects or requirements related to rebuilding engines.

I. Basic Engine Parameters for Reciprocating Engines.
1. Compression ratio.
2. Type of air aspiration (natural, Roots-blown, supercharged, turbocharged).
3. Valves (intake and exhaust).
a. Head diameter dimension.
b. Valve lifter or actuator type and valve lash dimension.
4. Camshaft timing.
a. Valve opening—intake exhaust (degrees from top-dead center or bottom-dead center).
b. Valve closing—intake exhaust (degrees from top-dead center or bottom-dead center).
c. Valve overlap (degrees).
5. Ports—two stroke engines (intake and/or exhaust).
a. Flow area.
b. Opening timing (degrees from top-dead center or bottom-dead center).
c. Closing timing (degrees from top-dead center or bottom-dead center).

II. Intake Air System.
1. Roots blower/supercharger/turbocharger calibration.
2. Charge air cooling.
a. Type (air-to-air; air-to-liquid).
b. Type of liquid cooling (engine coolant, dedicated cooling system).
c. Performance.
3. Temperature control system calibration.
4. Maximum allowable inlet air restriction.

III. Fuel System.
1. General.
a. Engine idle speed.
b. Engine idle mixture.
2. Carburetion.
a. Air-fuel flow calibration.
b. Idle mixture.
c. Transient enrichment system calibration.
d. Starting enrichment system calibration.
e. Altitude compensation system calibration.
f. Hot idle compensation system calibration.
3. Fuel injection for spark-ignition engines.
a. Control parameters and calibrations.
b. Idle mixture.
c. Fuel shutoff system calibration.
d. Starting enrichment system calibration.
e. Transient enrichment system calibration.
f. Air-fuel flow calibration.
g. Altitude compensation system calibration.
h. Operating pressure(s).
i. Injector timing calibration.
4. Fuel injection for compression-ignition engines.
a. Control parameters and calibrations.
b. Transient enrichment system calibration.
c. Air-fuel flow calibration.
d. Altitude compensation system calibration.
e. Operating pressure(s).
f. Injector timing calibration.

IV. Ignition System for Spark-ignition Engines.
1. Control parameters and calibration.
2. Initial timing setting.
3. Dwell setting.
4. Altitude compensation system calibration.
5. Spark plug voltage.

V. Engine Cooling System—thermostat calibration.

VI. Exhaust System—maximum allowable back pressure.

VII. System for Controlling Exhaust Emissions.
1. Air injection system.
a. Control parameters and calibrations.
b. Pump flow rate.
2. EGR system.
a. Control parameters and calibrations.
b. EGR valve flow calibration.
3. Catalytic converter system.
a. Active surface area.
b. Volume of catalyst.
c. Conversion efficiency.
4. Backpressure.

VIII. System for Controlling Crankcase Emissions.
1. Control parameters and calibrations.
2. Valve calibrations.

IX. Auxiliary Emission Control Devices (AECD).
1. Control parameters and calibrations.
2. Component calibration(s).

X. System for Controlling Evaporative Emissions.
1. Control parameters and calibrations.
2. Fuel tank.
a. Volume.
b. Pressure and vacuum relief settings.

XI. Warning Systems Related to Emission Controls.
1. Control parameters and calibrations.
2. Component calibrations.

APPENDIX III TO PART 1068—HIGH-ALTITUDE COUNTIES

In some cases the standard-setting part includes requirements or other specifications that apply for high-altitude counties. The following counties have substantial populated areas above 4,000 feet above sea level and are therefore considered to be high-altitude counties:

STATE OF ARIZONA

Apache
Cochise
Coconino
Navajo
Yavapai

STATE OF COLORADO

Adams
Alamosa
Arapahoe
Archuleta
Boulder
Chaffee
Cheyenne
Clear Creek
Conejos
Costilla
Crowley
Custer
Delta
Denver
Dolores
Douglas
Eagle
Elbert
El Paso
Fremont
Garfield
Gilpin
Grand
Gunnison
Hinsdale
Huerfano
Jackson
Jefferson
Kit Carson
Lake
La Plata
Larimer
Las Animas
Lincoln
Mesa
Mineral
Moffat
Montezuma
Montrose
Morgan
Otero
Ouray
Park
Pitkin
Pueblo
Rio Blanco
Rio Grande
Routt
Saguache
San Juan
San Miguel
Summit
Teller
Washington
Weld

STATE OF IDAHO

Bannock
Bear Lake
Bingham
Blaine
Bonneville
Butte
Camas
Caribou
Cassia
Clark
Custer
Franklin
Fremont
Jefferson
Lemhi
Madison
Minidoka
Oneida
Power
Teton
Valley

STATE OF MONTANA

Beaverhead
Deer Lodge
Gallatin
Jefferson
Judith Basin
Powell
Madison
Meagher
Park
Silver Bow
Wheatland

STATE OF NEBRASKA

Banner
Cheyenne
Kimball
Sioux

STATE OF NEVADA

Carson City
Douglas
Elko
Esmeralda
Eureka
Humboldt
Lander
Lincoln
Lyon
Mineral
Nye
Pershing
Storey
Washoe
White Pine

STATE OF NEW MEXICO

Bernalillo
Catron
Colfax
Curry
De Baca
Grant
Guadalupe
Harding

Hidalgo
Lincoln
Los Alamos
Luna
McKinley
Mora
Otero
Rio Arriba
Roosevelt
Sandoval
San Juan
San Miguel
Santa Fe
Sierra
Socorro
Taos
Torrance
Union
Valencia

STATE OF OREGON

Harney
Lake
Klamath

STATE OF TEXAS

Jeff Davis
Judspeth
Parmer

STATE OF UTAH

Beaver
Box Elder
Cache
Carbon
Daggett
Davis
Duchesne
Emery
Garfield
Grand
Iron
Juab
Kane
Millard
Morgan
Piute
Rich
Salt Lake
San Juan
Sanpete
Sevier
Summit
Tooele
Uintah
Utah
Wasatch
Wayne
Weber

STATE OF WYOMING

Albany
Campbell
Carbon
Converse
Fremont
Goshen
Hot Springs
Johnson
Laramie
Lincoln
Natrona
Niobrara
Park
Platte
Sublette
Sweetwater
Teton
Uinta
Washakie
Weston

PART 1074—PREEMPTION OF STATE STANDARDS AND PROCEDURES FOR WAIVER OF FEDERAL PREEMPTION FOR NONROAD ENGINES AND NONROAD VEHICLES

Subpart A—Applicability and General Provisions

Sec.
1074.1 Applicability.
1074.5 Definitions.
1074.10 Scope of preemption.
1074.12 Scope of preemption—specific provisions for locomotives and locomotive engines

Subpart B—Procedures for Authorization

1074.101 Procedures for California nonroad authorization requests.
1074.105 Criteria for granting authorization.
1074.110 Adoption of California standards by other states.
1074.115 Relationship of federal and state standards.

AUTHORITY: 42 U.S.C. 7401–7671q.

SOURCE: 73 FR 59379, Oct. 8, 2008, unless otherwise noted.

Subpart A—Applicability and General Provisions

§ 1074.1 Applicability.

The requirements of this part apply with respect to state and local standards and other requirements relating to the control of emissions from nonroad engines and nonroad vehicles.

§ 1074.5 Definitions.

The definitions in this section apply to this part. As used in this part, all undefined terms have the meaning the Act gives to them. The definitions follow:

Act means the Clean Air Act, as amended, 42 U.S.C. 7401–7671q.

Administrator means the Administrator of the Environmental Protection Agency and any authorized representatives.

Commercial means an activity engaged in as a vocation.

Construction equipment or vehicle means any internal combustion engine-powered machine primarily used in construction and located on commercial construction sites.

Engine used in a locomotive means either an engine placed in a locomotive to move other equipment, freight, or passenger traffic, or an engine mounted on a locomotive to provide auxiliary power.

Farm equipment or vehicle means any internal combustion engine-powered machine primarily used in the commercial production and/or commercial harvesting of food, fiber, wood, or commercial organic products or for the processing of such products for further use on the farm.

Locomotive means a piece of equipment meeting the definition of locomotive in 40 CFR 1033.901 that is propelled by a nonroad engine.

New has the following meanings:

(1) For locomotives, new has the meaning given in 40 CFR 1033.901.

(2) For engines used in locomotives, new means an engine incorporated in (or intended to be incorporated in) in a new locomotive.

(3) For other nonroad engines and equipment, new means a domestic or imported nonroad engine or nonroad vehicle the equitable or legal title to which has never been transferred to an ultimate purchaser. Where the equitable or legal title to an engine or vehicle is not transferred to an ultimate purchaser until after the engine or vehicle is placed into service, then the engine or vehicle will no longer be new once it is placed into service. A nonroad engine or vehicle is placed into service when it is used for its functional purposes. This paragraph (3)

does not apply to locomotives or engines used in locomotives.

Nonroad engine has the meaning given in 40 CFR 1068.30

Primarily used means used 51 percent or more.

States and localities means any or all of the states, commonwealths, and territories in the United States including the District of Columbia and any or all of their political subdivisions.

Ultimate purchaser means the first person who in good faith purchases a new nonroad engine or new nonroad vehicle or equipment for purposes other than resale.

United States has the meaning given in 40 CFR 1068.30.

§ 1074.10 Scope of preemption.

(a) States and localities are preempted from adopting or enforcing standards or other requirements relating to the control of emissions from new engines smaller than 175 horsepower that are primarily used in farm or construction equipment or vehicles, as defined in this part. For equipment that is used in applications in addition to farming or construction activities, if the equipment is primarily used as farm and/or construction equipment or vehicles (as defined in this part), it is considered farm or construction equipment or vehicles.

(b) For nonroad engines or vehicles other than those described in paragraph (a) of this section and § 1074.12, States and localities are preempted from enforcing any standards or other requirements relating to control of emissions from nonroad engines or vehicles except as provided in subpart B of this part.

§ 1074.12 Scope of preemption-specific provisions for locomotives and locomotive engines

(a) States and localities are preempted from adopting or enforcing standards or other requirements relating to the control of emissions from new locomotives and new engines used in locomotives.

(b) During a period equivalent in length to 133 percent of the useful life, expressed as MW-hrs (or miles where applicable), beginning at the point at which the locomotive or engine becomes new, those standards or other requirements which are preempted include, but are not limited to, the following: emission standards, mandatory fleet average standards, certification requirements, retrofit and aftermarket equipment requirements, and nonfederal in-use testing requirements. The standards and other requirements specified in the preceding sentence are preempted whether applicable to new or other locomotives or locomotive engines.

Subpart B—Procedures for Authorization

§ 1074.101 Procedures for California nonroad authorization requests.

(a) California must request authorization from the Administrator to enforce its adopted standards and other requirements relating to control of emissions from nonroad engines or vehicles that are not preempted by § 1074.10(a) or § 1074.12. The request must include the record on which the state rulemaking was based.

(b) After receiving the authorization request, the Administrator will provide notice and opportunity for a public hearing regarding such requests.

§ 1074.105 Criteria for granting authorization.

(a) The Administrator will grant the authorization if California determines that its standards will be, in the aggregate, at least as protective of public health and welfare as otherwise applicable federal standards.

(b) The authorization will not be granted if the Administrator finds that any of the following are true:

(1) California's determination is arbitrary and capricious.

(2) California does not need such standards to meet compelling and extraordinary conditions.

(3) The California standards and accompanying enforcement procedures are not consistent with section 209 of the Act (42 U.S.C. 7543).

(c) In considering any request from California to authorize the state to adopt or enforce standards or other requirements relating to control of emissions from new nonroad spark-ignition engines smaller than 50 horsepower,

the Administrator will give appropriate consideration to safety factors (including the potential increased risk of burn or fire) associated with compliance with the California standard.

§ 1074.110 Adoption of California standards by other states.

(a) Except as described in paragraph (b) of this section, any state other than California that has plan provisions approved under Part D of Title I of the Act (42 U.S.C. 7501 to 7515) may adopt and enforce emission standards for any period for nonroad engines and vehicles subject to the following requirements:

(1) The state must provide notice to the Administrator that it has adopted such standards.

(2) Such standards may not apply to new engines smaller than 175 horsepower that are used in farm or construction equipment or vehicles, or to new locomotives or new engines used in locomotives.

(3) Such standards and implementation and enforcement must be identical, for the period concerned, to the California standards authorized by the Administrator.

(4) The state must adopt such standards at least two years before the standards first take effect.

(5) California must have adopted such standards two years before the standards first take effect in the state that is adopting them under this section.

(b) States and localities, other than the State of California, may not adopt or attempt to enforce any standard or other requirement applicable to the control of emissions from spark-ignition engines smaller than 50 horsepower, except standards or other requirements that were adopted by that state before September 1, 2003.

§ 1074.115 Relationship of federal and state standards.

If state standards apply to a new nonroad engine or vehicle pursuant to authorization granted under section 209 of the Act (42 U.S.C. 7543), compliance with such state standards will be treated as compliance with the otherwise applicable standards of this chapter for engines or vehicles introduced into commerce in that state.