AUTHENTICATED
U.S. GOVERNMENT
INFORMATION
GPO

S. HRG. 106–534

ADMINISTRATIVE OVERSIGHT OF THE INVESTIGATION OF TWA FLIGHT 800

HEARING

BEFORE THE

SUBCOMMITTEE ON ADMINISTRATIVE OVERSIGHT AND THE COURTS

OF THE

COMMITTEE ON THE JUDICIARY
UNITED STATES SENATE

ONE HUNDRED SIXTH CONGRESS

FIRST SESSION

ON

THE INVESTIGATION OF TWA FLIGHT 800

MAY 10, 1999

Serial No. J–106–24

Printed for the use of the Committee on the Judiciary

U.S. GOVERNMENT PRINTING OFFICE
65–055 CC WASHINGTON : 2000

COMMITTEE ON THE JUDICIARY

ORRIN G. HATCH, Utah, *Chairman*

STROM THURMOND, South Carolina
CHARLES E. GRASSLEY, Iowa
ARLEN SPECTER, Pennsylvania
JON KYL, Arizona
MIKE DEWINE, Ohio
JOHN ASHCROFT, Missouri
SPENCER ABRAHAM, Michigan
JEFF SESSIONS, Alabama
BOB SMITH, New Hampshire

PATRICK J. LEAHY, Vermont
EDWARD M. KENNEDY, Massachusetts
JOSEPH R. BIDEN, JR., Delaware
HERBERT KOHL, Wisconsin
DIANNE FEINSTEIN, California
RUSSELL D. FEINGOLD, Wisconsin
ROBERT G. TORRICELLI, New Jersey
CHARLES E. SCHUMER, New York

MANUS COONEY, *Chief Counsel and Staff Director*
BRUCE COHEN, *Minority Chief Counsel*

SUBCOMMITTEE ON ADMINISTRATIVE OVERSIGHT AND THE COURTS

CHARLES E. GRASSLEY, Iowa, *Chairman*

JEFF SESSIONS, Alabama
STROM THURMOND, South Carolina
SPENCER ABRAHAM, Michigan

ROBERT G. TORRICELLI, New Jersey
RUSSELL D. FEINGOLD, Wisconsin
CHARLES E. SCHUMER, New York

KOLAN DAVIS, *Chief Counsel*
MATT TANIELIAN, *Minority Chief Counsel*

CONTENTS

STATEMENTS OF COMMITTEE MEMBERS

	Page
Grassley, Hon. Charles E., U.S. Senator from the State of Iowa	1
Thurmond, Hon. Strom, U.S. Senator from the State of South Carolina	4

CHRONOLOGICAL LIST OF WITNESSES

Panel consisting of Michael Marx, former metallurgist, National Transportation Safety Board; Henry F. Hughes, senior accident investigator, National Transportation Safety Board; and Frank Zakar, metallurgist, National Transportation Safety Board	5
Testimony of William A. Tobin, former chief metallurgist, Federal Bureau of Investigation; accompanied by Charles A. DeMonaco, Dickie, McCamey and Chilcote, Pittsburgh, PA; and Stephen M. Kohn, Kohn, Kohn and Colapinto, Washington, DC	21
Testimony of Andrew Vita, assistant director, field operations, Bureau of Alcohol, Tobacco, and Firearms	34
Panel consisting of Donald M. Kerr, assistant director, laboratory division, Federal Bureau of Investigation; and Lewis D. Schiliro, assistant director in charge, New York Division, Federal Bureau of Investigation	44

ALPHABETICAL LIST AND MATERIAL SUBMITTED

Hughes, Henry F.: Testimony	8
Kerr, Donald M.:	
Testimony	44
Prepared statement	47
Marx, Michael: Testimony	7
Schiliro, Lewis D.:	
Testimony	51
Prepared statement	53
Attachment to Statement of Lewis D. Schiliro, Overview of FBI Investigation of TWA Flight 800, dated Janurary 20, 1997	55
Tobin, William A.:	
Testimony	21
Prepared statement	32
Vita, Andrew: Testimony	34
Zakar, Frank: Testimony	12

APPENDIX

QUESTIONS AND ANSWERS

Questions of Senator Thurmond for:	
Michael L. Marx	71
Henry H. Hughes	72
Frank P. Zakar	72
William A. Tobin	73
Andrew Vita	74
Lewis D. Schiliro	77
Questions of Senator Grassley for:	
Donald M. Kerr	76
Lewis D. Schiliro	78, 82

Page

ADDITIONAL SUBMISSIONS FOR THE RECORD

Documents and memos of various investigative organizations submitted by Hon. Charles E. Grassley 84
GAO, Office of Special Investigations, Briefing Paper, submitted to Hon. Charles E. Grassley, dated Aug. 13, 1999 162
GAO, Office of Special Investigations, letter to Hon. Charles E. Grassley, dated Nov. 13, 1999 166
Letter from National Transportation Safety Board, to James Roth, Chief Division Counsel, New York Federal Bureau of Investigation, dated Aug. 20, 1999 170
GAO, Office of Special Investigations letter to Michael DeFeo, Office of Professional Responsibility, Federal Bureau of Investigation, dated Sept. 13, 1999 171
Letter to Hon. Louis J. Freeh, Director, Federal Bureau of Investigation from Hon. Charles E. Grassley, dated June 3, 1999 174
Letter to Hon. Charles E. Grassley, from FBI's New York Office, dated May 25, 1999 178

ADMINISTRATIVE OVERSIGHT OF THE INVESTIGATION OF TWA FLIGHT 800

MONDAY, MAY 10, 1999

U.S. SENATE,
SUBCOMMITTEE ON ADMINISTRATIVE OVERSIGHT
AND THE COURTS,
COMMITTEE ON THE JUDICIARY,
Washington, DC.

The subcommittee met, pursuant to notice, at 1:05 p.m., in room SD–226, Dirksen Senate Office Building, Hon. Charles E. Grassley (chairman of the subcommittee) presiding.

OPENING STATEMENT OF HON. CHARLES E. GRASSLEY, A U.S. SENATOR FROM THE STATE OF IOWA

Senator GRASSLEY. I call the hearing to order. I am Senator Chuck Grassley, chairman of this subcommittee, and I welcome everybody to the hearing and particularly welcome our witnesses, many who had to go out of their way to be here. We appreciate it very much.

Today's hearing is the result of a 2-year review by the subcommittee into how Federal agencies handled the investigation of what caused the crash of TWA Flight 800. The subcommittee conducted dozens of interviews of professionals from various agencies who were either on the crash scene or were at high levels within the various headquarters of the various agencies.

A consensus emerged from the interviews, supported by documentary evidence, about the conduct of the investigation. The collective testimony from today's witnesses will leave a very clear picture of that conduct, and, of course, it is a troubling picture.

This investigation was run by the Federal Bureau of Investigation. There is much doubt about whether the FBI had statutory authority as the lead agency. There will be more on that point later.

What the public knows about the crash and its cause is what they know through countless press conferences and leaks to the press. The public also has heard numerous conspiracy theories and myths or disinformation.

The purpose of this hearing is to provide a much more real picture of what happened and, hopefully, why it happened. The motivation for the subcommittee's efforts is to continue to help restore public confidence in Federal law enforcement. It is my intention to examine some very basic and systemic problems uncovered in this investigation.

The goal is to have a constructive dialogue with the FBI to ensure similar problems are not repeated in the future. No one will

be fingered as a scapegoat. However, if the FBI says today that its problems are of the past and it is now fixed, I will not buy that, and I warn the public not to buy it, either. There is a whole lot more to be done before the root causes of the problem are fixed. It is a systemic cultural problem that transcends any simplistic fix.

I would like to give a word about today's witnesses, because it is not easy for them to be critical of questionable actions that they saw by FBI personnel. These witnesses will likely have to work with the FBI again, and the FBI is bigger and more powerful than their agencies. So there is an intimidation factor here.

But that is not why these witnesses are coming forward. They are coming forward because of what they saw and what they saw offended them, both from a law enforcement standpoint and from the standpoint of public safety. They are coming forward because they truly believe it will serve the public interest and will improve the way that we investigate future incidents. This is an honorable thing for these people to do. The subcommittee appreciates their testimony and I am confident that the public will, as well.

This is a story about how the world's preeminent law enforcement agency, at least in terms of image and expectation, sometimes acted like it did not even have a clue. I believe that each and every FBI agent and employee who showed up on the scene of that tragic crash did the best job they could and had the best motives. The same goes for the employees of the other agencies and groups that worked so hard. Many volunteered to do that, and they sacrificed their time and their commitment to a greater and humanitarian good.

There was a basic problem, however. In my view, it was one of leadership. FBI leadership in the case of the TWA Flight 800 was a disaster. The FBI says that its investigation in this case is a model for the future. The FBI believes that even now. I say that because of their testimony they submitted for this hearing. If the FBI still believes that after this hearing, then I think the American people should be very alarmed about whether or not the FBI gets the message, because this investigation, which by statute was supposed to be run by the NTSB but which was commandeered by the FBI, is a model of failure, not success. And anyone who doubts that is not confronting reality.

The testimony that we will hear today will describe three things. First, it will show how the FBI lacked the proper training to handle an investigation of this type and violated the most basic standards of forensic science in terms of collecting evidence, handling that evidence, and preserving the evidence. It is the kind of thing that would make even rookie cops wince.

Second, we will try to understand the culture within the FBI that allows this sort of thing to happen. Why does the world's preeminent law enforcement agency make the kinds of mistakes that even rookies do not make?

And third, why is it that the FBI would try to prevent critical public safety information from getting to the proper authorities?

A January 1997 ATF report, which will be discussed today, showed that the cause of the crash of the TWA Flight 800 was a mechanical failure. The FBI did not want that report out. It tried to suppress it. The FBI feared that if the case became a criminal

case and went to court, the ATF report would be discoverable through Brady doctrine and might help exculpate the potential suspects.

But the FBI had the cart before the horse. You cannot start suppressing information when there is no crime. The vast majority of explosions like TWA are due to accidents, not to sabotage. For the FBI to assume first that an explosion is sabotage reveals its lack of experience in dealing with explosion incidents. Indeed, the FBI rarely investigates explosions and fires. Other law enforcement agencies, most notably the ATF, investigate many explosions and have lots of experience.

The proof is in the pudding. The ATF called the cause of the crash correctly, 10 months before the FBI did. In fact, it is fair to say that the FBI hindered the investigation and the public's and the families' right to know, and in the process, in my view, the FBI risked public safety.

Before we begin, I would like to clarify one critical issue. The FBI's suppression of the ATF report is a serious matter. In testimony from the third panel today, we will hear how the top FBI manager on this case, Mr. Jim Kallstrom, did not want crucial public safety information to go to public safety officials, and that is the National Transportation Safety Board. He succeeded in bottling it up. The NTSB has told us and told us all along that they never received a copy of the report.

Last Friday, pursuant to a document request of the FBI by the subcommittee, we discovered a draft letter dated March 17, 1997, from Mr. Kallstrom to the Chairman of the NTSB, Mr. Jim Hall. The unsigned draft letter said that a copy of the ATF report was enclosed. The FBI is claiming that this draft letter lets them off the hook, saying that they did, indeed, send the ATF report to the NTSB.

The fact is, it does not let them off the hook. I have been through too many Ruby Ridges and Wacos and Richard Jewel investigations to buy into that argument. I suspect that maybe the American public will be equally skeptical.

When the draft transmittal letter came to the subcommittee's attention, I asked the NTSB to verify if such a letter had indeed been received by them. The computerized mail system that logs in all letters to the Chairman showed that no such letter came in. An interview of the appropriate handlers of such letters showed no recollection of that letter.

Moreover, the FBI says that, pursuant to the subcommittee's document request, all relevant documents have been produced. Since no signed, finalized letter appears in the document production, I think it is wise to be skeptical that the ATF report was ever sent to the NTSB. And, in fact, that is what the NTSB has stated. In my view, that means the FBI is still not off the hook in terms of risking public safety in this case.

Once again, the purpose of this hearing is to continue the subcommittee's efforts to help restore public confidence in Federal law enforcement. As the Nation's preeminent Federal law enforcement agency, the FBI, under the scrutiny of the public's eye, has an obligation to ensure that the egregious problems that we will hear

about today never happen again, and I will do all that I can to help us through that process.

I would like to include in the record a statement from Senator Strom Thurmond.

[The prepared statement of Senator Thurmond follows:]

PREPARED STATEMENT OF SENATOR STROM THURMOND, U.S. SENATOR FROM THE STATE OF SOUTH CAROLINA

Mr. Chairman: At the time TWA Flight 800 exploded, there was a great deal of uncertainty, and one of the primary fears was that the disaster was intentionally caused by a bomb or missile. There was much speculation in the media and in other public forums about the possibility that terrorists were involved and that they might strike again.

Public awareness of the unpredictability and severity of domestic terrorism had already been heightened by the 1993 World Trade Center bombing, the 1995 Oklahoma City blast, and the ongoing trial of Ramzi Yousef for conspiracy to destroy certain American airliners. Moreover, it was only 10 days after the crash that the Atlanta Olympics would be interrupted by a bomb explosion.

In such an environment and with its vastly superior resources, it should not be surprising that the FBI was instrumental immediately after the crash. It was also appropriate for the FBI to aggressively search for evidence of a bomb or missile.

However, the FBI's responsibility is to search for the truth, like any other agency. I am concerned about reports that the FBI may have been preoccupied with the theory that the crash was the result of a criminal act. I am also concerned about press reports of faulty handling of evidence. If true, these actions may have delayed the investigation's arrival at the correct conclusions and unnecessarily postponed corrective measures that were needed to help prevent such aircraft failures in the future.

It is clear that the FBI and all other investigative and law-enforcement agencies need to work as closely as possible and conduct their investigations in a thorough, open-minded, and collaborative manner. I hope that much has been learned from the complex TWA investigation that will be beneficial in future disasters.

The FBI's response to problems identified 2 years ago by the Department of Justice Inspector General regarding its Crime Laboratory show that the Bureau can address legitimate concerns about its operations. To its credit, the FBI has made great strides in addressing the serious weaknesses uncovered in certain aspects of the Lab's operation. The FBI has undertaken the first major reorganization of the Crime Lab in 20 years, which will be even more effective once the Lab moves to its new headquarters in 2001. It now appears that reports undergo significant peer review to assure accuracy. Even more important is that many aspects of the Crime Lab have now received long-overdue accreditation from the American Society of Crime Laboratory Directors.

The reforms are still on-going. For example, in follow-up reviews, the Inspector General expressed concerns about an apparent preference to staff the Explosives Operations Group of the Crime Lab with special agent bomb technicians rather than simply having the most qualified scientists in these positions. The FBI is working to address concerns such as these.

I look forward to the testimony of the witnesses regarding the FBI's investigation of the TWA disaster.

Senator GRASSLEY. We will go now to our first panel. I call Mr. Hank Hughes, Senior Accident Investigator, the NTSB, also in charge of one of the hangars; Mr. Michael Marx, former Chief Metallurgist of the NTSB; and Mr. Frank Zakar, current NTSB Metallurgist.

I would ask you to raise your right hand. Do you swear to tell the truth, the whole truth, nothing but the truth, so help you, God?

Mr. HUGHES. I do.

Mr. MARX. I do.

Mr. ZAKAR. I do.

Senator GRASSLEY. We have asked witnesses, except for the last panel, not to prepare remarks, so we will be getting the information from all of you through question and answer. I am going to start with you, Mr. Marx.

PANEL CONSISTING OF MICHAEL MARX, FORMER METALLURGIST, NATIONAL TRANSPORTATION SAFETY BOARD; HENRY F. HUGHES, SENIOR ACCIDENT INVESTIGATOR, NATIONAL TRANSPORTATION SAFETY BOARD; AND FRANK ZAKAR, METALLURGIST, NATIONAL TRANSPORTATION SAFETY BOARD

Senator GRASSLEY. Were you aware that the FBI had violated security and brought in a psychic?

Mr. MARX. I was not directly aware of it, but I had—I was aware that they did. I did not see the psychic come into the hangar.

Senator GRASSLEY. How were you aware of that?

Mr. MARX. I saw some documentation that indicated that there was a report of the psychic.

Senator GRASSLEY. What was the reaction by you and others when you learned about this happening?

Mr. MARX. It is a reaction that it certainly was uncalled for, especially at that particular point in the investigation.

Senator GRASSLEY. Why would it be unusual for a psychic to be brought in on the scene at this time?

Mr. MARX. Well, I do not know what the—at the Safety Board itself, we would never bring in a psychic to do any investigation because it is the scientific examination of wreckage and the overall investigation that determines the causes or at least towards the causes. So we would not bring any—it would be against the grain to bring a psychic in to find out what happened on the aircraft.

Senator GRASSLEY. In your view, did FBI personnel unreasonably push the bomb and missile theories, to your knowledge?

Mr. MARX. Yes.

Senator GRASSLEY. Would you explain your rationale?

Mr. MARX. Well, the rationale behind that statement would be the fact that there is a period of time when it would be a possibility that some sabotage, such as a missile or a bomb, could be on board the airplane, and this was during the initial portion of the investigation, where we had an airplane that came out of the sky for no apparent reason. However—and there was also the fact that most of the wreckage was sitting 100 feet down on the sea floor. So most of the wreckage was not available, except for flotsam that came up.

So it was after the initial investigation when they started to get the majority of the wreckage into the hangar and you are able to look at the wreckage and determine how the airplane broke up as well as get the information from where they found it, the actual wreckage. At this particular point, in looking at all of the physical evidence and not seeing any evidence of any bomb or missile damage, it became unreasonable to continue to push that theory.

Senator GRASSLEY. Give us the approximate time frame for what you have just told me.

Mr. MARX. This would be in the neighborhood of September, late September, October, and November of 1996. This would be the year of the accident.

Senator GRASSLEY. Would you please describe for me the difficulties that you encountered from the FBI with your photography?

Mr. MARX. The FBI set up the security at the Calverton hangar. As an organization, it had it clearly marked that no cameras were allowed inside the Calverton hangar, and the only way that proce-

dures could be produced to get photography was through the FBI directly. In other words, the FBI photographer had to take the photographs. Any photographs that were taken at that particular time had to be developed by the Federal Bureau of Investigation, and all photographs, as I understand it, that were returned back had to stay within the hangar, could not go outside the hangar.

Senator GRASSLEY. You are describing a situation where you, in your work, normally take lots of pictures——

Mr. MARX. That is correct.

Senator GRASSLEY [continuing]. And use them as part of your scientific investigation, right?

Mr. MARX. That is correct.

Senator GRASSLEY. They were going to allow you to take pictures, but they had to develop them, or they did not even allow you to take pictures?

Mr. MARX. In the case, initially, there was—the procedures sort of changed from one point to another, but, basically, the photographs basically had to be taken initially by the FBI, as I understood it. Then, if you did take photographs, you had to then have a certain procedure, but all the film had to be developed by the FBI.

Senator GRASSLEY. What sort of a reason did they give you, that you could not develop your own pictures?

Mr. MARX. They did not give me any reason.

Senator GRASSLEY. They did not give you any reason? That is just the way it is going to be? How did this impede your work?

Mr. MARX. Well, in the case of the—on the second time that I was there, this was in October, and when I was taking photographs, having the FBI photographer take photographs, he had a film, of course, which he then took and went back to the New York field office to get developed. And I was there for a period of time of 3 to 4 days at that particular time, and then a month later, when I came back to get the photographs, they also said that it would take a week to 2 weeks to get these photographs. These photographs never showed up. To this day, I do not have those particular photographs.

So how does it impede the investigation is that there was no apparent record of the photographs that was taken and it was not disseminated properly so that we could get these particular photographs later on.

So it was—then, after that, I challenged the FBI in the photographic arena. Since I could not get photographs, I then, even though the signs said not to take a camera in there and do photographic by yourself, I ended up doing it, since I was the chief of the materials lab for the NTSB at that particular time and that is part of our duties. We were looking at the structural break-up of this particular airplane.

I ended up challenging that procedure, that the FBI was to do all their own photography, in other words, do all the processing of the film. And eventually, I got that to come through. But there was a threat that I was not supposed to be doing this, and eventually it came back from a higher-up in the FBI that I would be allowed to do it.

Senator GRASSLEY. The FBI brought in a company called Brookhaven Laboratories. What do you know about the company and why were they brought in?

Mr. MARX. Brookhaven National Laboratories is a government facility that is close by to the Calverton hangar. The people that were ahead of the investigation for the FBI were pushing to get an outside expertise, so to speak, to look at some of the wreckage and they were mainly looking at areas that had to do with penetrations, small penetrations that were in the fuselage, and they wanted to get somebody that apparently they thought was independent or somebody to check what we would be doing or do something that is separate than what we would be doing during the accident investigation. They were looking for evidence of some type of sabotage or some type of penetration that was in the fuselage.

Senator GRASSLEY. I probably should have done this before I asked you your first question, but I think I am going to ask you, and each of you before you answer questions, and I will give you the opportunity now, you should supply for the committee orally now your background, expertise, and what your role was in the TWA investigation.

TESTIMONY OF MICHAEL MARX

Mr. MARX. Well, I have a Bachelor of Science and Master's of Science from Michigan Technological University, which I obtained in 1966 and 1967. I then worked for 2 years at the Boeing Aircraft Company in Seattle, WA. And then following that, I worked 1 year at the Bell Helicopter Company in Fort Worth, TX, all in failure analysis of aircraft components.

Since November of 1970, I worked continuously for the National Transportation Safety Board, start off as a Metallurgist, going to Senior Metallurgist, going to the Chief of the Materials Laboratory Division, and eventually the Chief Technical Advisor for Metallurgy for the Safety Board.

During the time of the investigation of TWA, I was the Chief of the Materials Laboratory Division, and at that time, one of the other gentlemen here that is going to testify, Mr. Frank Zakar, I was his supervisor at that particular time. Frank had been on-scene since very shortly after the accident until approximately—for about 3 months, when the wreckage was starting to come in.

In late September, I went into the—I got involved in the investigation when we had a lot of the wreckage that was already recovered. I was the principal person that was involved in looking over the reports that dealt with the investigation as far as metallurgical engineering is concerned, metallurgy in general, but I also was involved with the structure metallurgy sequencing group that was formed, and that was formed and put into effect in around the first of December 1996 and lasted for most of the time during December, and it was a pivotal point to analyze the structure of the airplane from a sequencing standpoint.

The reason being is that even though there was evidence that there was an explosion that was in the fuel tank, there was still a need to find out whether anything else could have caused that explosion in that fuel tank other than some source that was on the airplane or some secondary type of damage that could have caused

the explosion in the fuel tank. It was not the idea to have this sequencing group determine the exact reason why—what the specific reason for the explosion, but only to indicate through its analysis whether it could be the initiating event that caused the structural damage.

So I was imminently involved in that, set up the sequencing group, and that is how I got involved. After that, I was more or less involved in various other aspects of the investigation, including some of the stuff that dealt with the holes and with the FBI wanting to solicit other expertise.

Senator GRASSLEY. I would assume that it has got to be incredible to you that a person with your background in this area and working for as long as you have with the key agency that is involved in transportation safety, that you would have these problems with the FBI doing your job, the very same agency bringing in a psychic to see why a plane went down. Does that not seem kind of odd to you?

Mr. MARX. Well, yes. As I understand it, the NTSB, the National Transportation Safety Board, is the lead agency for aircraft accident investigation, and until there is a criminal act that was declared, I mean, it was my understanding that we should be doing the investigation of that aircraft accident.

Senator GRASSLEY. What did Brookhaven do that the Federal Government could not do, and did Brookhaven add anything to the investigation?

Mr. MARX. Brookhaven did not have the—they have very intelligent people that work at Brookhaven. It is a very good organization. But they have neither the expertise nor the experience to do any aircraft accident investigation. They have never looked at any wreckage. They had basically a very poor background to do any forensic-type investigation or any kind of an accident investigation in this particular case because the Safety Board had all the expertise that is needed to do that and was advising the FBI that this was not—we were just kind of like stand-by, looking at what they were trying to produce, but we more or less discouraged this type of an operation.

Senator GRASSLEY. Mr. Hughes, before I ask you your first question, would you give us your background, your expertise, and what was your role in this investigation?

TESTIMONY OF HENRY F. HUGHES

Mr. HUGHES. Yes, sir. I started my career in investigative work in 1967. I was trained by the Army as a military intelligence specialist. In 1972, I joined the Fairfax County Police Department in Virginia. Subsequent to my completion of training and a few years on the job, I served as a staff member and instructor at the Northern Virginia Criminal Justice Academy, for 8 years on the instructional staff at Virginia Commonwealth University, and I have also served for 4 years at the University of Southern California teaching accident investigation.

I came to the Safety Board in 1985 and joined as a member of the Highway Division. Approximately 3 years later, I transferred to the Bureau of Technology, where I cross-trained. I have been with the Safety Board, as I said, since 1985, and during the course of

my tenure there, I have investigated 109 major transportation accidents in all five modes of transportation.

On the TWA investigation, I was assigned initially with the Go Team as the team's survival factor specialist. Upon arrival, it was quite clear that my expertise in that area was limited in terms of need. At that time, I was directed by the investigator in charge to find a suitable place to try to reconstruct the airplane, and along with some of our folks from management, they found a suitable place, the Calverton facility, which was a former Grummond Aircraft plant, and it was my responsibility to set up the reconstruction area, the layout of the aircraft, and then about 3 weeks into the investigation, I was transferred and led the team that reconstructed the interior of the aircraft.

Senator GRASSLEY. I am going to have my staff bring a sheet of paper to you, and the purpose of bringing this to you is to ask you to verify if those are notes that you provided my subcommittee investigators.

Mr. HUGHES. Yes, sir, it certainly is.

Senator GRASSLEY. OK. Let me ask, do those notes reflect the handwritten contemporaneous notes that you kept in the diary during the TWA investigation?

Mr. HUGHES. Yes, they do.

Senator GRASSLEY. Would you tell the subcommittee why you felt compelled to take those notes?

Mr. HUGHES. From a professional standpoint, I was greatly distressed and disturbed with the professional working relationship we had with the FBI, along with my observations of the working relationship with the FBI and the other organizations, to include the Bureau of Alcohol, Tobacco, and Firearms and the Federal Aviation administration and TWA and the other parties. But it was a matter of professional concern.

Senator GRASSLEY. Would you summarize, in general, the nature of the problems that you saw and why you believe they occurred, for example, from the standpoint of inadequate training, that and anything else that you can lend to our body of information we need.

Mr. HUGHES. Yes, sir. The FBI has a group called the Evidence Recovery Team, or I should say several groups. To my knowledge, there were about 30 to 32 that participated in the TWA investigation. It is also my understanding that 28 of the 32 had absolutely no or very little forensic science training whatsoever. It got to a point where, after a few months, I was asked by the FBI to teach a 4-hour class on basic forensic procedures and biohazard protection to the newly-arriving emergency—or, I should say, Evidence Recovery Teams to provide them with a basic knowledge of how to perform their duties at the accident reconstruction area.

Senator GRASSLEY. Would you go down the list and briefly describe each of these points and indicate the proper way to do them, what the proper way would have been?

Mr. HUGHES. Yes, sir. I think, early on, part of my job in survival factors is crash worthiness and basically investigating the deaths of the passengers and crew. Part of that job is to coordinate with the medical examiner's office, in this case, the Suffolk County Medical Examiner's Office. Dr. Charles Wattley is in charge.

It was distressing to me when I first went to the ME's office to see that the FBI agents, although there were several, in fact, probably dozens at the ME's office, there was little or no consideration to establishing the chain of custody on the clothing of the victims, and for that matter, some of the particulate matter that had been extracted from the victims and the clothing. Clothing and particulate matter were commingled and the documentation as to what came from where was spotty, at best.

Another concern that I had initially was that in terms of our investigative effort, it was very important to know where the victims had been recovered from, yet little or no effort was made to do a GPS fix on the victims, and subsequently, we know little in a lot of cases as to where people came from. That is the first item. There are about 16 of them.

I mentioned that the clothing was stored—was collected and commingled. Stated procedure for any clothing in a crime scene or other accident site—and the procedures are basically the same, there is no difference between a crime scene and an accident scene investigation in terms of the handling of evidence—but wet clothing, whether it is wet by chemicals, body chemicals, blood, or water, salt water in this case, the proper procedure is to air dry the clothing, wrap it in clean butcher paper after it has been photographed, catalog it, and put it away for safekeeping.

In the case of TWA, all of the clothing was taken to a refrigerator truck marked "Anderson" on the side, which had been towed to the accident site. Unfortunately, about 7 or 8 weeks into the investigation, the refrigerator truck refrigeration unit ran out of diesel fuel, and for approximately a day-and-a-half, the clothing got warm and began to mold, along with the other material stored in this trailer, and was destroyed as far as any evidentiary value.

Seat covers on the seats were another issue. Again, if there had been an explosion, whether it is a mechanical or structural problem or an intentional event, any damage to any part of the airplane has to be scrutinized closely. Many, many of the seat covers—there were 430 passenger seats and 21 crew seats—had the seat covers removed and they were commingled in a dumpster. About 2 months into the investigation, I went to the dumpster with the assistance, I have to say, of an FBI agent and tried to sort out the materials in there. We found, in addition to the seat covers, actually seats that had been missing that were mistakenly thrown in there.

Senator GRASSLEY. Before you go on, whose decision was that on the point you just made?

Mr. HUGHES. That was a decision made by the FBI, sir.

Another area of concern with regard to the reconstruction of the interior was the chemical swabbing of the seats, and, as well, when you are especially looking for projectile shrapnel, like debris, would be to x-ray the seats. However, there was never any consistency in either the x-raying of the passenger seats or the chemical swabbing of the seats, although as the seats were collected, my team and I went to great pains to specifically tag the seats to identify those that had not been examined. Yet, to this day, those tags are still there because they have not—the FBI never went back and did a subsequent exam, either by chemical swab or x-ray examination.

Another problem that occurred, and it was recognized about 2 months into the investigation, was the disappearance of parts from the hangar. I complained about it at several of our nightly investigative progress meetings, yet it fell on deaf ears for a long time. Finally, the group that I worked with—there were 10 of us, I might add, including ATF and three New York State Troopers as well as TWA personnel—scoured our hangar, verified exactly what was there 1 day, and not to our surprise, I might add, we found that seats were missing and other evidence had been disturbed.

The FBI, on my last complaint, did act and they found at 3:00 a.m. on a Saturday morning, two or three of their own agents were in our hangar. It was not authorized. I supervised that project and these people had no connection to it. After that——

Senator GRASSLEY. Do you know who those two agents would be?

Mr. HUGHES. No, sir, I do not.

On another occasion, in the main hangar, when I was working there, an agent from the FBI was brought in from Los Angeles. Apparently, from what I understood from other agents I talked to, subsequent to my observation of this individual, he had arrived from the West Coast, had some experience in bomb investigations, and I saw him in the middle of the hangar with a hammer in the process of trying to flatten a piece of wreckage. In investigative work, you do not alter evidence. You take it in its original state and preserve it. But I actually saw this man with a hammer, pounding on a piece of evidence, trying to flatten it out.

Senator GRASSLEY. What was the purpose of his doing that?

Mr. HUGHES. I have no idea, sir.

Senator GRASSLEY. Was that agent Mr. Ricky Hahn?

Mr. HUGHES. I believe his name is Hahn.

Another problem that I observed was that there were—probably, I guess, the ratio in the hangar between Safety Board investigators and FBI and other folks was about 100-to-one. But I noticed during the course of documentation that the bomb technicians did not seem to use the conventional method of documenting the evidence.

When you look at a piece of potential evidence, it should be photographed, measured, and then collected safely. On one occasion, I observed an agent walk up to a seat back, a tray table, if you can envision where they might be mounted on the back of the seat, and instead of looking at this piece of metal—it was a piece of plastic that was embedded in metal—and documenting it properly, the individual took out a pair of pliers, a leatherman tool, and put tool marks on that piece of evidence and attempted to pull it out of the seat back to examine it—totally unacceptable procedure.

Senator GRASSLEY. Do you know the name of that individual?

Mr. HUGHES. No, sir, I do not.

Another problem that occurred, and I think it was administrative, but it did affect the investigation, was the FBI's reluctance to commit its agents to participate on investigative groups. As you know, the Safety Board, when we send a Go Team, has specialists. Each one of those specialists form an investigative group. Those groups are comprised of people from the FAA, from the airplane manufacturer, from the carrier, and any other agencies that might help lend expertise to the investigation. They were certainly wel-

come to participate, but at no time were they offered to participate on groups.

Conversely, for a period of about a month, five ATF agents worked on my group and I have to say that they did contribute significantly to assisting in the reconstruction of the interior of the airplane.

I think the other area of concern, and it is an administrative one, is the unkind, I guess is the best way I can put it, attitude that FBI management displayed toward the Bureau of Alcohol, Tobacco, and Firearms agents. I can understand because of some of the past history that there may be some friction, but I can remember several days where ATF agents were basically told to sit at picnic tables in the hangar and not allowed to actively participate in the investigation. Those were the exact times when we needed all the help we could get. Fortunately, I got five folks to help me in my hangar because I was in a separate facility.

But I do not think it was an efficient use of manpower. The Bureau of Alcohol, Tobacco, and Firearms is a very fine agency in terms of explosives investigation and not to have that talent available, especially in my hangar with the reconstruction of the interior, did lead to some difficulties.

I think the other two items, the release of personal items without consultation of the Safety Board, had this been a criminal act, and there is no evidence to suggest that it is, I would think that every piece of material on that airplane, to include personal items, should have been documented and inventoried, and before any release was authorized, it should have been with the consensus of the NTSB and other parties to the investigation.

Senator GRASSLEY. That is the end of your list?

Mr. HUGHES. Yes, sir, it is.

Senator GRASSLEY. My staff was hoping you had one more thing on your list, about the psychic.

Mr. HUGHES. Yes. That was already mentioned by Mr. Marx, my colleague, but I did not see the psychic. I arrived at the hangar about 10 minutes after the fact and there was quite a bit of commotion. From what I understand, the visit to the hangar by the psychic was not authorized by any of the FBI supervisory personnel at the hangar.

I have to say that, for the most part, the FBI supervisors I worked with, they were pretty reasonable people, but I can remember they were extremely distraught and concerned about the psychic. As a matter of fact, at our progress meeting that night, all of the folks that represented the parties to the investigation, and there were probably 80 in the room, in the interest of public, discussed it and everybody expressed their concern. But it did happen.

Senator GRASSLEY. Thank you, Mr. Hughes.

Mr. Zakar, would you please give us your background, your expertise, and what role you played in the TWA investigation?

TESTIMONY OF FRANK ZAKAR

Mr. ZAKAR. Yes. My name is Frank Zakar. I am a Senior Metallurgist at the National Transportation Safety Board. I have been working there for approximately 11 years now. My educational background basically is a Bachelor of Science in metallurgical engi-

neering, which I earned in 1980, and a Master of Science in metallurgic, which I earned in 1984. My expertise is in performing failure analysis of components involved in transportation-related accidents.

My first 2 years with the Safety Board basically involved investigating airplane accidents, where I would go out to the field and document wreckage and document any failures that might be related to, basically—that might be related to structural failures, major structural failures. My major work is involved in the materials laboratory, and at times, I am requested to go out to the field and perform examinations. Our laboratory basically examines 150 cases a year and I approximately work on about 30 cases.

Prior to coming to the Safety Board, I worked as a materials engineer for Lockheed Martin for a period of 4 years.

My participation in the Flight 800 investigation was the first 3 months of the investigation, I reported to the investigation in the hangar approximately 3 days after the accident occurred and the purpose was to examine for evidence of preexisting structural failures in the airplane, looking for clues for corrosion, manufacturing defects, improper maintenance, and explosion damage, and second, to assist any of the investigators and the Safety Board with issues regarding materials used in manufacturing the airplane.

Senator GRASSLEY. In a very general way, for my first question, I would like to have you give us your recollections and thoughts on the way that the FBI recovered and handled the wreckage.

Mr. ZAKAR. Well, first of all, I felt that there were some restrictions during the course of the investigation which impeded our ability to perform our examinations. The first policy was, as Mr. Marx already indicated, restriction on photography. The problem was that the FBI was concerned with safety and the information that might leak from the hangar, so restrictions were imposed on photography.

At that time, it was decided that in documenting evidence in the hangar, photographs were to be taken by FBI agents. We thought that was impractical and we were able to work out an agreement that would allow us to take photographs, and in such case, we were allowed to take photographs only when we were wearing red vests in the hangar. That would indicate to the FBI that basically there was a person with a camera on the scene and it was part of the investigation. Of course, there was a double standard there in that the FBI photographer did not wear any red vests.

Another issue that I would like to bring out was the developing of film. Again, this is relating to basically the first 2 weeks of the investigation. It was agreed upon that if we wanted to have film developed, they were to be taken to the command post within the hangar, the FBI command post, and that they would basically have the film processed for us and the turnaround rate would be 1 day.

I recall during my first submission, I submitted one roll of film and that roll of film was not returned. I had a second submission of photographs, which I submitted two or three rolls of film that documented the wreckage. There was something very critical that I wanted to have on the second submission and those were photographs that I took within the hangar of the entire layout of the operation. Our management had basically asked—they were inter-

ested in finding out how the operation had gone in the hangar and I felt at that time that it was important to get an overall photograph of the entire layout. Because that film was given to the FBI and it was not returned, I was not able to make a presentation to our headquarters office concerning the operation within the hangar.

Senator GRASSLEY. It just disappeared?

Mr. ZAKAR. Yes. Basically, I delivered the film to an FBI agent at the command post within the hangar, and there were several of them, of course. That contributed to a problem. I gave my name. I gave the roll of film. He jotted down my name, put the roll of film next to that piece of paper, and I walked away, assuming that the film would be processed and returned the following day.

Senator GRASSLEY. Who is that person?

Mr. ZAKAR. I do not recall the name of the agent. I had a question whether or not that film had been developed. I had asked that question to a FBI photographer. He said he would look into it and——

Senator GRASSLEY. To this day, you do not know?

Mr. ZAKAR. To this day, I——

Senator GRASSLEY. You do not know if it was ever developed?

Mr. ZAKAR. To the best of my knowledge, the film has not been recovered. I would like to add that when the film and prints were delivered, they were supposed to be delivered to a specific metal hangar within our command post. Our name would be on the envelope, and all we had to do was pick them up. I remember the first 3 weeks after the submission of these rolls of film, I checked every one of those envelopes in the metal file cabinet and they were not to be found.

Senator GRASSLEY. Did you read into this a message from the FBI that we do not need you as an employee of the NTSB, that, somehow, your work was not respected, your work was not needed, we really do not need you around, or do you not read a signal like that into that sort of activity?

Mr. ZAKAR. I feel that possibly there were too many people involved in the proceedings and the procedure and that possibly the film was mishandled. And, of course, that brings other suspicions as to why photographs of the entire operation could not be delivered to the NTSB. It raises concern.

Senator GRASSLEY. I interrupted you, so please continue.

Mr. ZAKAR. The other problems we had in the hangar was difficulties in exchanging of information. I found that there were many levels of management involved in handling information. There was the New York office of the FBI, the DC office. There were several agents running the FBI command post. That made it difficult for information to be transmitted to the proper offices.

I found that to be quite different than our organization. At the NTSB, we have a list of investigators who are predetermined, prior to being launched to the investigation. Each investigator has a specialty and we feel that because this organization is predetermined prior to the launch, our goal is very specific, it is detailed, and there is no quarrel who is in charge of the specific areas of the investigation.

The other problem I encountered in the hangar was getting information in regard to how much of the wreckage was recovered. At times, inquiry would come up to our hangar regarding how much of the wreckage have you recovered. I found that, for example, the FBI had an evidence room which locked up personal items and other objects from the wreckage.

I also found out, at times, we were interested in finding out what wreckage or what pieces of components from the airplane were being sent between the hangar and the FBI headquarters for laboratory examination. I found that to be a difficult subject. It took several days for us to find out what was being sent between the hangar and the headquarters in Washington, DC. When inquiring about getting a list of items that were sent to the headquarters office, the response was, basically, we cannot give you a list, but we will verbally give you the information that we have available and you jot it down on a piece of paper. I thought that was a rather awkward way of conducting business.

The other concern is altering of physical evidence. As Mr. Hank Hughes has indicated earlier, this is in regard to the examination of a passenger seat. I recall several agents working on a chair of a passenger and pulling out fragments from within the chair. There was some tearing involved and rather sloppy handling of the material that was removed from within that seat.

Senator GRASSLEY. I would ask you at this point if you know who that individual or individuals may have been. Do you have the names of those people?

Mr. ZAKAR. No, not at—I do not recall. One of the interesting points that I would like to make is that during the first several weeks of the operation, it was rather difficult to focus on one specific area. Wreckage was coming in by the truckload. In countering some of these problems, I was needed in the area where the unloading occurred so we could examine the wreckage, because it was rather difficult to keep focus on several of the problem areas within the hangar.

But what I do want to stress is that we have expertise within the Safety Board which handles the area of seating, and one of them is Hank Hughes, and I think it would have been proper at that time if anybody was going to handle any part of the wreckage that they would notify the specific investigator at the NTSB what the activities were being performed and to what extent.

One of the problems we faced is that after the wreckage is moved from one side of the hangar to the other, the evidence could be altered and that could at the end cause a problem in interpretation of what will come out of the investigation.

Another problem I had with observation at the hangar was a specific person, a special agent of the FBI, who rushed to judgment in looking at some evidence in the hangar. One of them was specifically—as I recall, this special agent was raising above his head a leg portion of a chair, and because he noted that the piece was severely damaged, he concluded that the damage was a result of bomb damage, without any scientific evidence, and this was in front of other investigators.

Senator GRASSLEY. Did you see that yourself?

Mr. ZAKAR. I saw that myself. I walked up to this gentleman and I asked him what basis did he have for this, and his answer was, basically, if it is that badly damaged, what else could cause that damage?

Senator GRASSLEY. That is what he said?

Mr. ZAKAR. Right.

Senator GRASSLEY. Who was that individual?

Mr. ZAKAR. I do not remember. And the interesting thing about it is, I approached this gentleman and specifically told him, I think it is important to realize that it is important to keep an open mind and to also leave open the possibility that this damage could be caused by the airplane from a high altitude impacting the water, and sure enough, several weeks after I talked to this gentleman, the seats were laid out in the hangar in a position similar to what you would find inside the airplane and it was concluded that the seats did have damage as a result of impact with the water.

Another observation I made was that there was a specific attitude on the part of the FBI to continue the bomb and missile theory. There was a fixation on the bomb and missile case. I feel that this was not open-minded thinking and that was not a professional manner to conduct the investigation. We at the Safety Board, when we examine wreckage, we keep an open mind and we look for factual information which will develop a case, regardless of what the outcome is. We did not particularly care if the examination was going to be leading to a bomb theory or complete catastrophic failure of the airplane.

Senator GRASSLEY. Was this approach really unreasonable, in your point of view?

Mr. ZAKAR. I think because of the overwhelming number of agents in the case and because of possible motivation that it was bomb damage, that the large mass of agents at the hangar overshadowed the fact that we had an accident investigation and that there was basically a domino effect from the very beginning, and the philosophy just continued down through the entire operation. As I indicated earlier, it overshadowed the fact that the NTSB was conducting an accident investigation.

Senator GRASSLEY. When you say it continues through the entire investigation, would you give me approximate dates, from the start of the investigation until what time?

Mr. ZAKAR. Well, I could only specify that I was in the hangar for the first 3 months, so during the first 3 months of the investigation——

Senator GRASSLEY. Very dominant?

Mr. ZAKAR. Very dominant from the very beginning. One more item.

Senator GRASSLEY. Yes.

Mr. ZAKAR. I would like to say that the situation, in the case of the FBI, was not whether someone was going to find evidence of a bomb, it is a matter of when, and there is a differentiate between whether and when. I believe that possibly the FBI had knowledge of something that we were not aware of that possibly could have led them to believe there was missile damage and that information was not shared with us early in the investigation.

Senator GRASSLEY. But in hindsight, then, you think that that was an unreasonable supposition on their part?

Mr. ZAKAR. I think it is important we all have a specific job. I feel that the FBI had a job to look for a missile, any criminal wrongdoing, but to not keep an open mind and to not realize that there is another agency of the government performing investigation is rather unprofessional.

Senator GRASSLEY. I would ask you, Mr. Zakar, as well as Mr. Hughes, did you have any contact with a person by the name of Tom Thurman, and if so, what kind of contact?

Mr. HUGHES. Yes, sir, I did. Mr. Thurman, at the time, was the Chief of the FBI Explosives Unit. I, in fact, arrived with some of his agents at the accident site. Early on, we worked for a period of several weeks. I will not say we worked with them, because they would not work with us, but we worked in close proximity with Mr. Thurman and his colleagues.

Senator GRASSLEY. Were his actions consistent with the criticism that we have heard thus far?

Mr. HUGHES. Yes, sir. As a matter of fact, I think in Mr. Thurman's case—I am trying to pick my words carefully because I want to be accurate, but it was almost caustic. He showed no respect or no regard for our concerns in many cases, and a lot of our concerns and questions that we raised went ignored.

Senator GRASSLEY. Mr. Zakar, would you answer the same question about knowing Mr. Thurman and what sort of contact you had with him.

Mr. ZAKAR. I have not met Mr. Thurman before or have worked with him before, so I cannot go any further in describing that.

Senator GRASSLEY. That is OK. Mr. Hughes, then maybe you can tell me a little more specifically, how did Mr. Thurman's actions impede your work?

Mr. HUGHES. Mr. Thurman represented what, from a practical standpoint, at least to the Safety Board investigators on scene, and basically, there were two, Dr. Merrett Birky and I, one-third of the—it is almost like there were three different FBI's. We had the FBI Explosives Unit, the FBI Manhattan office, and FBI headquarters.

Mr. Thurman's group basically got to the scene and when we started to assemble the parts and catalog them for later reconstruction, began to do the chemical screening and examination, looking for what they believed was an explosive device, you know, a bomb or missile. The problem was, we have an organized, systematic approach to reconstructing aircraft, as well as trucks, buses, and trains, that has worked very well for many years, and when that conflicted with Mr. Thurman's operation, we clashed. We wanted to do it in a systematic, organized way. Their job, from what I could see, was more of a shotgun approach, trying to look at as much as possible in as short a time as they could, and it caused some problems and friction.

Senator GRASSLEY. Thank you. Mr. Zakar, I think I will go back to you on the next question. You touched on it here or there, but I just kind of want to bring it together, all in one answer, and that is your impression of FBI leadership at the scene.

Mr. ZAKAR. I would like to add that I did not have specific problems with the individuals in the FBI. It was more a philosophy and policy. I think that, just to be open-minded, just to give an opinion, I think that the operation would probably have been better if the agency kept an open mind that another agency was in the hangar and was involved in TWA Flight 800.

Senator GRASSLEY. My last question, did you know about or hear about the FBI bringing in a psychic and what was your reaction?

Mr. ZAKAR. I learned about the psychic during the hangar operation, but was nowhere near the psychic. My original impression is that, basically, it's an unscientific approach and, basically, if it did not interfere with my job, I basically did not have any feelings towards it. But I thought it was a rather unscientific approach on the part of the FBI and possibly a desperate attempt to further look at the possibility that the bomb did hit the airplane.

Senator GRASSLEY. A final question to all of you, but maybe all of you do not want to answer it, but it just a simple summation, whether or not any of you have anything you would like to add in the interest of how to avoid problems like this in the future.

Mr. HUGHES. Yes, sir, I have some ideas.

Senator GRASSLEY. Please go ahead.

Mr. HUGHES. The idea of professional respect, I think, is the first thing that needs to be considered. I know since the on-scene investigation has been completed, the Safety Board has initiated meetings with the FBI forensic folks, but I think the cultural attitude of turf fighting and that sort of thing has got to be done away with. We have one job and that is an objective search for the truth.

The only way we can do that is to respect each other and work in partnership, and I think from the top down in both organizations, if we adopt that philosophy, on an individual basis, we are going to get along fine. The FBI agents in the hangar that we worked with on a day-to-day basis were excellent people. They did the best they could. They worked their heart out.

But I agree with what Mr. Zakar said. There is an institutional philosophy that is very troubling. It is not new to me. I spent 14 years in police work before I came to the Safety Board, so I am familiar with it, but it is not constructive and it needs to go.

Senator GRASSLEY. Mr. Marx.

Mr. MARX. Well, the comments that were just made by Hank are—I can second those. Basically, I think that there was just too many people that were involved from the FBI in this particular case. That overshadowed anything else in the investigation.

I think that there is a need to have a presence of the FBI and ATF or whatever, but not such an overbearing presence in a particular case, and, of course, in the future, I think that it would be better to have the overall lead agency be the ones that do know how to investigate the accident from the standpoint of the scientific and professional manner, and that being the National Transportation Safety Board.

Senator GRASSLEY. Mr. Zakar, would you like to add anything?

Mr. ZAKAR. Yes. I feel that some of the difficulties within the investigation could be improved with increasing the speed of information that is traveled from one agency to another. I feel that we may have to have a designated representative work closer to our organi-

zation early on and, somehow or another, allow exchange of information in a much quicker manner without going through the different layers of management that we found within the investigation.

Senator GRASSLEY. I know that you have been here just with us in this official environment for a little over an hour, talking to the American people and to the Congress about the issue before this committee, this investigation and the mishandling of the TWA Flight 800 investigation, but I want the American public to know that you have been working with the committee staff and other interested people over a long, long period of time.

So I want to thank you very much for your testimony, for the benefit of your knowledge into these matters, and we greatly appreciate your cooperation, your contribution in educating us about how we can avoid these problems in the future. Because everything we talked about here is what can we do to make sure that when people step onto an airplane, they know that their government has been fully behind them in efforts to make for safe transportation. I know you know that is what your job is about, all forms of transportation, for that matter, for you. They expect that, and when we have these sorts of bureaucratic and turf battles that you have talked about, it really does not give the American public the satisfaction that everybody in government is concerned about their safety. I think you have shown that you have, but you ran into too many obstacles to do your work.

We thank you for the work you do, and I will dismiss you now. Thank you very much. You are welcome to stay if you want to stay through the entire hearing.

Senator GRASSLEY. Our next panel consists of Mr. Bill Tobin, former Chief Metallurgist of the FBI and one of the world's most renowned metallurgists. Mr. Tobin testified before this committee in September 1997. He was still an FBI employee in the laboratory at that time. I would like to have Mr. Tobin give the committee his background, and I would like to ask the two people who are with you, who are attorneys, their purpose for accompanying Mr. Tobin, and anything that they would like to say.

It does not matter whether Mr. Tobin wants to speak first or the attorneys speak first. Maybe it would be better if we would have the attorneys say why you are here, and then we will go to Mr. Tobin for his background and expertise. Please introduce yourself.

Mr. DEMONACO. Yes. My name is Charles A. DeMonaco. I am an attorney in Pittsburgh with the law firm of Dickie, McCamey and Chilcote. We, along with Attorney Stephen Kohn, co-represent Mr. Tobin.

Prior to joining the law firm of Dickie, McCamey and Chilcote, I was with the U.S. Department of Justice for 15 years. I served as an Assistant Chief of the Environmental Crime Section here in Washington, DC, for about 9 years, and then prior to that, I was an Assistant U.S. Attorney in Pittsburgh for about 6 years. Prior to that, I was a prosecutor in the local district attorney's office for about 7 years. So my background is primarily that involved in criminal prosecutions.

While I was an Assistant Chief of the Environmental Crime Section in Washington, DC, I had the honor of serving the United

States of America as the counsel in the criminal prosecution relating to the Exxon Valdez oil spill. The National Transportation Safety Board played a very vital role in that investigation and the result for the United States was tremendous, with a settlement in criminal and civil litigation in excess of $1 billion.

I also had the honor of serving as Senior Counsel in a criminal prosecution of a major oil spill in San Juan, PR, and that resulted in a jury conviction of three corporations, as well as a criminal fine imposed of $75 million.

William A. Tobin served as the Chief Metallurgist at the FBI and he played an important role in determining the cause and the failure and provided expert testimony to the jury. He was extremely thorough in his analysis and clear in his testimony. He was professional at all times.

We are here providing counsel to Mr. Tobin because we understand the science is extremely important in disaster investigations. Without a proper scientific analysis that serves as a bedrock, investigative theories may be flawed and subsequent prosecutions, if any, may be problematic, and the coordination is the key to successful investigations and prosecutions.

It is an honor for Attorney Stephen Kohn and me to represent William Tobin in this proceeding. His only objective is to be cooperative and helpful to the subcommittee and we would like to thank the chairman and the subcommittee for inviting William A. Tobin to provide testimony to the subcommittee in this important matter.

Senator GRASSLEY. Mr. Kohn, do you have anything you want to say?

Mr. KOHN. Yes, Senator. My name is Stephen Kohn. I am an attorney with the firm of Kohn, Kohn and Colapinto, and also I am the chairman of a nonprofit group, the National Whistleblower Center. In these capacities, I represent a number of current and former FBI agents.

Unfortunately, the rules and regulations which govern FBI agents' speech are, at best, unclear, at worst, very restrictive, and part of my reason for being here is to provide counsel to Mr. Tobin. The FBI requires even its former agents to submit various testimony or public documents to the FBI, essentially to a censor, for pre-publication clearance. It is our position that this requirement concerning communications with Congress is illegal and inappropriate. However, because there is some ambiguity in the law, we believe that Mr. Tobin does need representation here to ensure that his presentation complies with both the Constitution and the FBI regulations. Thank you.

Senator GRASSLEY. Mr. Tobin, would you please stand. Would you raise your right hand. Do you promise to tell the truth, the whole truth, and nothing but the truth, so help you, God?

Mr. TOBIN. I do.

Senator GRASSLEY. Thank you. Do you have any sort of a statement that you would like to make? I do want you to tell us about your background and your role with the TWA investigation, but any sort of statement you want to make beyond that is OK, as well, and then I will ask you questions.

Mr. TOBIN. No, Mr. Chairman, I do not.

Senator GRASSLEY. Would you please give us your background, then.

TESTIMONY OF WILLIAM A. TOBIN, FORMER CHIEF METALLURGIST, FEDERAL BUREAU OF INVESTIGATION; ACCOMPANIED BY CHARLES A. DeMONACO, DICKIE, McCAMEY AND CHILCOTE, PITTSBURGH, PA; AND STEPHEN M. KOHN, KOHN, KOHN AND COLAPINTO, WASHINGTON, DC

Mr. TOBIN. I have a Bachelor of Science degree in metallurgy from Case Institute of Technology in Cleveland. I continued my formal education in graduate school at Ohio State University, in George Washington University, and in the University of Virginia. I have studied and authored a number of publications in the forensic metallurgy arena and I have been the guest speaker for all of the prominent professional societies throughout this country and in Canada.

Senator GRASSLEY. For my first question, what was your position at the FBI?

Mr. TOBIN. At that time, I was the civilian equivalent of the Chief Metallurgist for the FBI laboratory.

Senator GRASSLEY. And then your role in the TWA 800 crash investigation.

Mr. TOBIN. My role was to evaluate whether there could be or was any criminal activity associated with any of the—as to the cause or the materials' deformation or damage issues related to the crash.

Senator GRASSLEY. When did you arrive at the hangar in Calverton, NY, where the plane was being reconstructed?

Mr. TOBIN. I arrived on August 4, 1996.

Senator GRASSLEY. At that time, did you have any inclination as to whether or not a bomb was the cause of the crash?

Mr. TOBIN. From what I had seen and heard in the media, it did have the earmarks, potentially, of having been a bomb.

Senator GRASSLEY. Generally, what were the scientific issues you confronted in order to be able to reach any valid conclusions concerning the cause of the crash?

Mr. TOBIN. This air crash, in particular, was a very dynamic interaction of materials and forces that resulted in a massive amount of fractured and otherwise damaged metal aircraft components, known to have been subjected to three of the most hostile circumstances that materials can undergo.

In this particular case, there was a midair fuel explosion, there was impact of the pieces from approximately 2.5 miles in the air with the water's surface, and subsequent undersea saltwater corrosion. The results were fractures, punctures, fragmentations, tears and rips, deformation, and thermal, mechanical, chemical, and electro-chemical damage processes, including unavoidable recovery damage. This was an extraordinary combination of material interaction and degradation processes, each of which can serve to mask characteristics of the other processes. So, in short, this was a massive and technically complex metallurgical undertaking.

Senator GRASSLEY. Was your initial inclination that the cause of the crash was a bomb, was it confirmed by your evaluations?

Mr. TOBIN. No, Mr. Chairman, they were not.

Senator GRASSLEY. Why not?

Mr. TOBIN. The materials just lacked, completely lacked any of the characteristics that would support impulsively loaded materials from within the aircraft. The various characteristics, and there are numerous, that would indicate the presence of a bomb resulting in impulsive loading were absent in the component.

Senator GRASSLEY. What was it about the crash debris which disproved a bomb or missile theory?

Mr. TOBIN. Well, the bomb—disproved the bomb theory because of the complete absence of any of the characteristics associated with the type of behavior that bombs can cause. As to the missile component, the same arguments would apply because that is also generally considered impulsive loading. But in addition, there were penetration problems. Admittedly, 100 percent of the aircraft was not recovered, but every time there was a portion of material missing, I could actually track through the multi-layered structures and actually find a component that existed in the path of what could have been viewed as an external penetration.

Further, I would add that in some of those areas where there did appear to be a hole, the holes were from within outward rather than from outward in. That was another characteristic, and that the material behavior was consistent with the fuel explosion known to have occurred.

Senator GRASSLEY. Now I would like to have you tell me what there is about your area of scientific expertise which qualified you to reach these conclusions that the cause of the crash was not a bomb.

Mr. TOBIN. Metallurgy or material science is the most appropriate scientific discipline to make the evaluations as to the material behavior and the deformation and damage associated with the various degradation and destructive processes.

Senator GRASSLEY. Did you work with any other branches of the Federal Government during your years of disaster investigations?

Mr. TOBIN. Yes, Mr. Chairman, I did.

Senator GRASSLEY. How did you find working with the NTSB?

Mr. TOBIN. In my view, they are unsurpassed in their expertise, in their competence, and in their professionalism.

Senator GRASSLEY. Within 30 days of arriving at Calverton, what was your professional assessment as to whether the cause of the crash was a bomb?

Mr. TOBIN. It progressed from an inclination of viewing the earmarks as possibly a bomb, but it changed rather quickly to confirmation within my mind that there was no indication of a bomb, and unlikely to be that of a missile, within the first 30 days.

Senator GRASSLEY. Did you discuss that assessment with members of the National Transportation Safety Board? If so, how did they respond?

Mr. TOBIN. I did. We were—I have a very intimate relationship with them from having worked these disasters for approximately 25 years with them at that point. That, of course, would include derailments and maritime disasters, but we were in daily and I would almost—I probably could safely say hourly contact in our very intimate working relationship. So there was not really any

proactive discussion needed because we were in a constant information exchange mode while we were working together.

Senator GRASSLEY. Did there come a time when explosive residues were found on crash pieces of the plane, and what was your reaction to this discovery?

Mr. TOBIN. Yes, there were three separate incidents, or instances, of the finding of high-explosive residues on various parts. The first incident, I was quite skeptical, but when I reexamined the areas from which the residues were recovered, I confirmed that the surrounding materials showed no evidence whatsoever of any damage processes caused by a bomb.

So at that point, I began to urge, partially because of my Marine Corps combat experience, urged that the history of this research—that this aircraft be researched, because when I was in combat, we all carried basically some C–4, which is a high explosive, and it is very easy to transfer the residues, so I thought the possibility existed that this aircraft may have been used to ferry troops to the Middle East for the Middle East war, or that another possibility for the deposition was that the aircraft was used in drug-sniffing exercises for canines.

Senator GRASSLEY. When the second incident of explosive residues was found on a piece of the plane, what was your reaction?

Mr. TOBIN. I again repeated the process of confirmation as to the site and location from which the residues were recovered and confirmed, again, no indication whatsoever of impulsive loading or bomb or missile damage. I strengthened and reiterated my suggestion that the history of this aircraft be researched.

Senator GRASSLEY. How did Mr. Kallstrom inform you when the third incident, the high-explosive RDX was found on a piece of the recovered plane? What did he say?

Mr. TOBIN. When I was advised of that third finding of the residues, I was approached in a very excited manner and the statement was, "We have got it. We have got it. It is confirmed." And I asked what was confirmed, and he says, "We got it, proof of the bomb." And I saw in the very agitated or hyper-emotional state that he was in that I needed to do some significant calming, or try to bring it back down to earth, or to urge prudence and caution in interpretation of those RDX residues.

I then decided that I probably should—I used the analogy of a cardboard box at that particular time and what I was trying to convey to him was a simple materials analogy. My representation was, I said, Jim, basically, from a materials science standpoint, this is what you have got. You have got a cardboard box. Your chemists are finding residues inside the cardboard box and the sides of the box are not even bulged out. In my business, that is called a clue.

That did not sit well, and at that point, he got about 6 inches from my face and proceeded to advise me in rather graphic terms that it was a bomb, and that is the most suitable presentation I can put on for prime time right now.

Senator GRASSLEY. Was the insinuation when he is 6 inches away from your face is that he says it is a bomb and you, as a scientist, had better say it is a bomb?

Mr. TOBIN. I do not know what he intended to insinuate or intended for me to—how he intended for me to use that. I do know

that he was rather graphic in his approach that it was a bomb, and, in fact, I ended up wearing several particles of his saliva from that presentation, but——

Senator GRASSLEY. Did you tell Mr. Kallstrom that if there was to be a public pronouncement that Flight 800 crashed due to a bomb, that you would not support that announcement from a material science standpoint?

Mr. TOBIN. Yes, Senator, that is correct.

Senator GRASSLEY. Why did you say this to Mr. Kallstrom?

Mr. TOBIN. After the finding of the third explosive residue hit and I saw the reaction and the fervor and the intensity and the frenzied reaction, and I also saw the clothes that he had that day and his—I recognized the behavior immediately preceding most of the press conferences. And at that particular time—I am sorry, I have something in my eye here—at that particular time, I saw that a major PR gaffe was imminent, was in the making, and I think in large part due to my loyalty to the FBI, I decided at that point that, as we would say in Vietnam, I needed to throw my body on the grenade at that particular time.

I wanted to preclude or prevent a major, major PR gaffe that, in my view, was about to happen, from which I do not believe the FBI would have recovered for a very long time. I then thought the last tool in my arsenal at that point was to indicate—to basically put the emperor without clothes, that if he was going to proceed to make an announcement that there was a bomb, that he would not be supported from the material science standpoint. So that was, at that point, the last tool in my arsenal.

Senator GRASSLEY. My next point is kind of a summation, maybe, of what you said, but I want to ask it very directly. Based upon your direct personal observations, your direct contacts with Mr. Kallstrom and Mr. Maxwell, and your discussions with bomb tech and chemical analysts at the crash site, at the investigation site, had you not forcefully protested directly to Mr. Kallstrom, do you believe that the FBI would have publicly declared the cause of the TWA Flight 800 crash to have been a bomb, and why do you think so, if you think so?

Mr. TOBIN. It is my opinion that that was imminent and would have occurred. But even if there was not a 100 percent probability that it was going to occur, the odds were so high, based on the actions and the demeanor and the tension, that for the Bureau's sake, I decided it was not worth the chance. So I—that is when I interceded, at that point, and tried to put him in a position exposing him that—to give him pause to think about any announcement that may be imminent.

Senator GRASSLEY. I am told that on August 13, 1996, you wrote in a memo to your supervisor, "I am underwhelmed by the finding of RDX." Why did you write this?

Mr. TOBIN. Several reasons. One is I, in fact, was underwhelmed by the finding of RDX, as I have already indicated. But I—it is partially my style to introduce some humor to try to get a point across, so I think I made up my own word in that particular time, but I decided after that proclamation from Mr. Kallstrom to me that it was a f-ing bomb that I needed to start a documentation, because I could foresee claims of malfeasance from the material science side

or that the metallurgist never communicated his findings or—there was no recording of my opinions, my positions.

So at that point, I decided—and that was August, mid–August, I believe—I think it was August 13, only several weeks after I arrived. And I also needed to try to start reversing the tide, to try to introduce back to headquarters the crack in the dam that—to start trying to opening the focus of causes.

Senator GRASSLEY. Did you have occasion to have to deal with an order for 1,000 random samples to be carved out of the aircraft?

Mr. TOBIN. Yes, I did.

Senator GRASSLEY. What were your reasons for refusing to comply?

Mr. TOBIN. Throughout the whole interaction, except maybe the first week, I had some serious problems with statutory authority, title 49 versus title 18 issues. I throughout the investigation felt, and particularly in view of having worked so many of these with the NTSB in the past, that this was not our aircraft to be carving up. I also saw that that would have an effect, from the material science standpoint, a significant impeding effect on their carrying out their chartered mission under title 49. I did not feel that it was our place to be carving up their aircraft.

Second, I had a problem. I and my colleague have spent almost our entire lives in metallurgy classrooms and in the practice of metallurgy and material science issues and we were being told, basically, what samples we needed, how many samples we needed to draw our conclusions, and what tests would be conducted, albeit the test that was insisted that we—by an individual who had not spent a minute in a metallurgy classroom.

I would also add that the request was so absurd on its face, in part because we were ordered to put 1,000 random samples in a metallurgy machine, and to this day, we are not real sure what a metallurgy machine is, but that was the order at the time.

Senator GRASSLEY. Did you ever——

Mr. TOBIN. I am sorry. May I amend my——

Senator GRASSLEY. Please do.

Mr. TOBIN. Part of the issues in that were that they were dissatisfied with the examinations we had conducted. They were dissatisfied with my lack of note-taking and there were five reasons that I enunciated as to why I was not taking detailed notes on the examination of these fragments, and there was dissatisfaction of the techniques that we were using to conduct these examinations, again, by the individual who had not spent a minute in a material science classroom.

We were—basically, they were dissatisfied with the visual examinations. We were doing macroscopic examinations and microscopic—stereo-microscopic evaluations, but the supervisor in charge of the on-site investigation was dissatisfied with those investigations and was insisting that we put 1,000 random parts through a metallurgy machine.

I would also add that those were the same techniques used by the financially interested parties, the parties who had billions of dollars at stake. They were using the—not only using the same examination techniques that my colleague and I were doing, in fact,

they asked where I was able to—if they could purchase one of the items that I used for my examinations to help their examination.

Senator GRASSLEY. Did you ever hear the phrase, "bomb techs three, Tobin zero," and what did that mean if you heard it?

Mr. TOBIN. I was not aware you had that information. That was basically an analogy to a baseball game. The first week or so, I kept trying to urge prudence and caution in the interpretation of these explosive residue hits. When the third one came, I was basically told in this baseball game that metallurgy had no runs and that the bomb techs had three runs, and how was there any credibility to be attached to my urgings of prudence and caution in the material science issues? I, at that point, tried to explain that NTSB and my joint materials data stream or data flow was a long, a very long, complex, drawn-out process, that we could not just walk up to an aircraft and take a swab and then get an instant hit.

But in answer to your question, Senator, that was a baseball game analogy that was demonstrated to me.

Senator GRASSLEY. At some point, did the bomb techs agree with yours and the NTSB's assessment that the cause of the crash was not a bomb?

Mr. TOBIN. Yes, Senator. I would estimate that probably 4 to 6 weeks, after about 4 to 6 weeks, we were all unanimously, or near unanimously, on the same page, and all being the bomb techs, the National Transportation Safety Board, and the metallurgy or the material science interest in the FBI laboratory. We were all unanimously—or we were united in our observations and conclusions that there was no bomb or missile damage evident on those aircraft parts.

Senator GRASSLEY. The term 4 to 6 weeks brings you to what date on the calendar, approximately—just approximately?

Mr. TOBIN. My guess would be mid-September, early to mid-September.

Senator GRASSLEY. Were you aware of the visit of a psychic at the investigation site?

Mr. TOBIN. Yes, I was.

Senator GRASSLEY. What was your reaction to this visit?

Mr. TOBIN. I was very disturbed.

Senator GRASSLEY. Tell me how disturbed you were.

Mr. TOBIN. That was at a very sensitive time in the investigation. Up to that point, there had been no release of scientific information to the American public. I felt—I am sorry.

Senator GRASSLEY. Go ahead.

Mr. TOBIN. I felt that that was a very wrong signal to be sending out to the American public, that two of the foremost agencies charged with being guardians of the public safety had to resort to a psychic to resolve this aircraft—these aircraft issues, that their scientists were not sufficiently competent to deal with it. I also took it as a collective slap in our scientific and investigative faces in view of the mountain of experience that the NTSB and I had had working these things, that they felt the need to resort to a psychic at that particular time.

Senator GRASSLEY. Go ahead.

Mr. TOBIN. I did understand and learn eventually that it was not an authorized visit by the psychic, but then that brings the next question, raises the next question, of if we were so——

Senator GRASSLEY. Why?

Mr. TOBIN. Yes, Senator. If we were so controlling of another agency's personnel, why could we not control our own personnel?

Senator GRASSLEY. Do you think someone was thinking in terms of getting brownie points by bringing in a psychic?

Mr. TOBIN. I cannot address the motives for bringing a psychic in. I do not have any firsthand information.

Senator GRASSLEY. Did you learn what the psychic's findings were?

Mr. TOBIN. I believe I did.

Senator GRASSLEY. Do you want to say what those findings were?

Mr. TOBIN. I do not recall. They went in one ear and out the other, but that may have been the catalyst, and I did not even put this together until recently, that may have been the catalyst for the pristine overhead bin incident that——

Senator GRASSLEY. Let us talk about that.

Mr. TOBIN. I was ordered to, in a rather frenzied manner, to go conduct an exhaustive search and contact with my NTSB liaison, in liaison capacity, to find a certain overhead bin that was characterized as in pristine condition, but it was in a very emotional, very frenzied manner, so I inquired as to why I was looking for this particular pristine overhead bin on the port side of the aircraft, that was from the left-hand side of the aircraft. I was told that that was proof that NTSB was, "squirreling away evidence" and "stashing evidence," which, again, flies in the face of my interpretation of whose aircraft this was.

So I inquired as to why the pristine overhead bin was of such significance. I was told that that was demonstrative proof that they were squirreling away evidence, that the recovery had been captured on a videotape from the *USS Grapple* or the *USS Grasp,* one of the recovery ships, and on the videotape, it showed this overhead bin being raised or set on the deck.

And I said, well, I am still missing some critical information. Why is this important? Why is this critical? To which I was advised that it had a suitcase, a badly charred and damaged suitcase inside the overhead bin. My response at that point was, well, I am still missing some critical information. Why are we looking for this, "pristine overhead bin"? Are you suggesting that there was a bomb in the suitcase that went off? Yes. Well, that went off, instantaneously brought down a 747 with no recording on the FDR or CVR, the flight data recorder or the cockpit voice recorder, and did not put a scratch in the overhead bin, and I was told, yes. We want that overhead bin. And I was told to go find that overhead bin.

Senator GRASSLEY. Did you ever hear the expression that 260-some witnesses cannot be wrong, referring to various eyewitness accounts which supported the bomb and missile theory?

Mr. TOBIN. Yes, I did.

Senator GRASSLEY. Under what circumstances did you hear that position and how did you respond to those comments?

Mr. TOBIN. That was the continual argument advanced when I continued to try to use the cardboard box analogy, that, basically,

NTSB, in my position, in a material scientist position, is that the box fragments—if you have a bomb in a box, the box fragments will tell the story. And my position was, I do not care how many witnesses say what. The box—the container has to tell the story, and I was continually told that 260-some witnesses cannot be wrong.

Well, I repeatedly tried to convey the physics involved in the materials interactions, No. 1, the velocity of sound and air and why, from my experience from having worked the streets as an agent, why eyewitness testimony can be flawed, and I conveyed that the speed of light—I am sorry, the speed of sound and air and the problems with audible and visual stimuli from witnesses that—260-some witnesses whose focus would have been brought to the same XYZ coordinates in space, that there were reasons why that those 260-some witnesses could not have—highly unlikely that they would have all seen the initial conflagration or explosion of that aircraft, a position which was ignored for a very long time, but which eventually was confirmed by CIA analysis.

Senator GRASSLEY. What was the reaction of the FBI officials to your scientific position?

Mr. TOBIN. Well, I would—the officials on site after—when I first got there, I basically walked on water, but after about a week to 10 days, when it became clear that I was not supportive of the bomb or the missile proponents, I began to methodically get excluded from any input in the decision making process with regard to bomb or missile or even mechanical failure causes.

Senator GRASSLEY. Was your position ever validated, and if so, by whom and how?

Mr. TOBIN. My position of—oh, with regard to the reasons why 260 witnesses could be wrong?

Senator GRASSLEY. Yes.

Mr. TOBIN. Yes. In fact, as I indicated, the CIA did a very excellent study and videotape showing the effects of audible and visual stimulation and external stimuli and that they, in fact, confirmed that those witnesses, it was highly unlikely that they would have seen the original event. And again, there were logical reasons why. When one's attention is drawn over to that—to an omni-directional explosion, individuals will probably see fragments or something proceeding in an upward direction, trailing smoke and flames, particularly if it is from the fuel tank. So there were reasons why some of the characteristics that were described probably were seen.

Senator GRASSLEY. Was there any scientific support justifying the missile theory cause of the crash?

Mr. TOBIN. No.

Senator GRASSLEY. What were some of the characteristics which negated the missile theory?

Mr. TOBIN. Well, probably the most prominent—actually, there were two main areas negating the missile theory. One, of course, again, is the absence of impulsive loading, or very high-speed fracture and failure mechanisms.

But second was there were serious issues with every theory, or almost every theory, as to access of an external missile to the fuel, to the fuel tank. Even with, as I indicated earlier, if one would focus on an area where we did not recover all of the fuel tank, there were components nearby that would have blocked or at least

recorded passage of any externally penetrating object. And if that were not the case, there were many layers, including the external underbelly of the aircraft, and that was recovered almost—a huge portion of that was recovered.

So that, basically, the only plausible theory for some of the missiles to have occurred would have been if there were missiles such that could maybe get through a 1- or 2-inch opening, make an immediate left, go 90 degrees through a seam, and then maybe take another 90-degree right, and then maybe reverse itself and come back over. But those were some of the considerations.

Senator GRASSLEY. Like the single bullet theory. Despite the scientific explanations, did any FBI officials with responsibility over the crash scene continue to advance the missile theories?

Mr. TOBIN. Yes.

Senator GRASSLEY. Did they continue to pursue these missile theories in a scientifically responsible manner, and please explain your answer, and particularly, I would like to have you explain the pickle fork missile theory.

Mr. TOBIN. The answer to the first portion of that is no, they were not scientifically responsible. The pickle fork area or theory was a continued thorn in our sides. I tried to negate it and brunt it, but it reared its head in about the third or fourth day.

That was an area on the starboard side of the aircraft, the right side of the aircraft, that had the appearance of a significant amount of material missing. Now, I would also add that what is important in the evaluations of the damage was the missile size that was the most prevalent and available to have penetrated the aircraft or was of the most reasonable threat was 3.5 to 4 inches in diameter. That is a critical dimension.

This pickle fork area, I overheard the supervisor running the operation in briefings, again, of dignitaries and other officials, indicating that there was material missing about like this. Well, the hands, I first of all noted, were in a curved manner, which was not consistent with the damage, but second, it was also roughly 3.5 to 4 inches or 6 inches in diameter. So I saw that several times and I thought I probably should step in and try to clarify this, to nip this in the bud, because that was, I saw, fueling—no pun intended—the perception and drawing out the theory that the missile caused the damage.

So I went to the supervisor and I said, let me, if you have got a few minutes, let me describe to you the process by which a metallurgist or material scientist, or in this case, I conclude that there is not—there was only about an inch to an inch-and-a-half of material missing from this site. So I proceeded to take him through the logic processes. I actually used cardboard and cut-outs and got him to agree that the fracture here was of this shape and we cut the cardboard to the fracture shape.

We went to another portion of the hangar and I got an agreement that these fractures, in fact, matched. This is where it is from, in the front portion of the fuel tank and the starboard side, and proceeded to then show, OK, now, if we unfold this folded material, there is an additional 3 inches. I went through the whole process and got him to agree that there was only 1 to 1½ inches of material missing.

The very next day, I heard the same story to the next group of dignitaries he was briefing, so I thought, well, I will try this again. So I went back that day or the next day and went through the same process again, and 2 days later, the same 3.5 to 4 inches of material was missing from this pickle fork area. At that point, both the bomb techs and I threw up our hands and——

Senator GRASSLEY. Can you give me the name of the individual involved?

Mr. TOBIN. That would be SSA Ken Maxwell.

Senator GRASSLEY. Thank you. Did they continue to—I think you have answered that. Let me ask you if you have any recommendations as to how transportation disasters should be investigated by the forensic communities in the future.

Mr. TOBIN. I would have several recommendations in that regard. First, let me clarify, if you do not mind, just one sentence before I answer that. I would like to make clear that this was not a usual course of events for FBI–NTSB interaction. The 25 years that I had been working this and my colleagues had been working this with the NTSB was a beautiful system. It worked very, very well. This particular investigation was the aberration, in my experience. So I would be reticent to suggest some coarse tuning but rather some fine tuning. So the observations that I would offer, I would suggest be taken in a fine-tuning mode.

My first observation is that the outcome or practice of science for public safety issues of such magnitude should not be dependent on a single individual's agenda, biases, idiosyncracies, or the strength of their personality, which it clearly was in this case.

My second observation or suggestion is that scientists are not on an equal footing inside the law enforcement community with the strategic—in the strategic decision making process. There are a number of examples of that, but, basically, scientists are, I will not say viewed as second-class citizens, but, basically, what happens inside the forensic community is if we corroborate or validate the prevailing theory, we walk on water. If the science does not validate the prevailing theory, then the science is just basically ignored.

There are some other issues. I think the third would be that if there is some fine tuning to be—additional fine tuning, I would suggest that we revert back to the way that FBI and NTSB have worked these cases in the past, that the FBI's interest can be preserved by the presence of a materials scientist, who is experienced in materials deformation and damage, working alongside the NTSB, whether it is rail, maritime, or aircraft disasters, represent the FBI's interest in determining whether there is or could be potential criminal activity involved in the cause, and then allow that contingent to ratchet up whatever additional support or FBI involvement that there should be.

So that would be my—basically, that the—I think part of the problem that occurred here was that with the process and the system being so singularly dependent upon a single individual, a strong personality individual, that what I was seeing there in the first 4 to 6 weeks is what psychologists have found or concluded to be basically what was called group think, what they called group think, and I saw that very evident there, where—and that was, if

I may explain the term, was after the Bay of Pigs failure, psychologists determined one, if not the, major cause of that disaster was that the decision making process was comprised of individuals of very similar backgrounds, similar training, similar careers. In that strategic decision making process, there was no dissenting opinion within that process.

I saw that there was such a unanimity of opinion that it was a very—I felt like I was trying to stop a train singlehandedly going 90 miles an hour there, but that is part of why I am suggesting that if there is a way of fine tuning, or if fine tuning is desired, that it should be somehow or other—and I think the resolution I am offering is by allowing the materials scientists and a very small contingent to liaison and represent the FBI's interest. I believe that could go a long way in reducing the vulnerability of group think, because NTSB clearly, in my personal experience, are the world renowned experts in disaster investigation.

Senator GRASSLEY. What you just described here are some of the same problems that we found in Waco. The experts' advice is not given a voice. The negotiators and the HRT was in hard control at that particular time, in that event.

Let me ask you something along the same line, and that is about advice and about how this went and what needs to be done for the future. We have had FBI officials claim that the TWA Flight 800 investigation was so good that it is a model for the future. Is it a model for the future?

Mr. TOBIN. I can only address the materials science and the scientific issues, but I would say, yes, it is a model, but it is a model how not to integrate proper science and how not to integrate the scientific conclusions into the strategic decision making process. But, clearly, that is on the opposite end of the spectrum from the term that I believe the model was intended.

Senator GRASSLEY. Are the problems you encountered during the TWA Flight 800 investigation characteristic of other disaster investigations that you have conducted for the FBI?

Mr. TOBIN. No, Senator. I will underscore that this was a singular aberration that was not characteristic of my prior working arrangement with NTSB or on behalf of the FBI. It was a beautiful synergy and relationship in every other situation that I represented the FBI's material interests in.

Senator GRASSLEY. This is my last question, for your observations or recommendations you might have of what went wrong with the system with regard to the flow of scientific information.

Mr. TOBIN. A major flaw that I do see in the system is that it is too easily ignored by the strategic decision makers. I think if you look at the Unabomber situation, the Richard Jewel Centennial Park bombing, the TWA 800, the common thread is that the scientific flow of information is ignored when it does not support the prevailing theory. And again, that is the basis by which—part of the basis by which I suggest that scientists are not on an equal footing in the decision making process within the law enforcement, or at least within the FBI.

Senator GRASSLEY. You are a breath of fresh air, Mr. Tobin. You have been very helpful to us for not only appearing today, but for our getting the necessary background that needs to be done to

make this a valuable contribution to the process of constitutional oversight by the Congress. I do not know how to thank you other than just to say thank you. Obviously, you set an example for a person who was trained to seek the truth, to work for an organization that is always supposed to seek the truth and let the truth determine guilt or innocence, and I think you have lived up to that very well, and particularly you shine in this otherwise black hole of investigation that we had in regard to the TWA case. I thank you very much and I will dismiss you at this point.

Mr. TOBIN. Thank you, Mr. Chairman.

Mr. DEMONACO. Thank you, Mr. Chairman.

Mr. KOHN. Thank you.

Senator GRASSLEY. Thank you all.

[The prepared statement of Mr. Tobin follows:]

PREPARED STATEMENT OF WILLIAM TOBIN, SUBMITTED BY STEPHEN M. KOHN, COUNSEL FOR WILLIAM TOBIN

Mr. William A. Tobin, a former Supervisory Special Agent ("SSA") for the Federal Bureau of Investigation ("FBI") was requested by the Chairman of the Subcommittee on Administrative Oversight and the Courts to testify and provide pre-filed testimony for hearings on the "Administrative Oversight of the Investigation of TWA Flight 800." As a former FBI Supervisory Special Agent Mr. Tobin is required by his FBI employment contract to submit any written material, including written testimony before the U.S. Congress, to the FBI for prior review of its content. This rule remains in effect even though Mr. Tobin retired from the agency on March 31, 1998.

Because of the FBI's pre-publication rules, Mr. Tobin, at this time, is not able to submit written testimony to the Subcommittee.[1] This statement was prepared by Counsel for Mr. Tobin and is submitted on Mr. Tobin's behalf. Mr. Tobin will testify before the Subcommittee and will answer questions posed by members of the Subcommittee.

Mr. Tobin shall be joined by his two attorneys, Mr. Charles A. DeMonaco of Dickie, McCamey & Chilcote and Mr. Stephen M. Kohn of Kohn, Kohn & Colapinto, P.C. Mr. DeMonaco is a former Assistant Head of Environmental Crimes at the United States Department of Justice ("DOJ") and is very knowledgeable concerning the role of professional scientific conduct in disaster investigations. Mr. Kohn has represented a number of employees employed at the FBI who have raised science and management related concerns within the FBI crime lab, including Dr. Frederic Whitehurst. Mr. Kohn also represents three former FBI employees in a federal law suit concerning proposed DOJ regulations related to FBI employee protection.

WILLIAM A. TOBIN

On June 27, 1971, Mr. William A. Tobin was appointed a Special Agent for the FBI. Before joining the Bureau, Mr. Tobin served three years in the Marine Corps—two in active combat duty in the Republic of South Vietnam. While in the Marines he received the Bronze Star with Combat "V," two crosses of Gallantry and twenty additional military combat decorations. After joining the FBI he worked organized crime and police corruption in Chicago, and general crimes in Detroit. In September, 1974 Mr. Tobin was assigned as a forensic metallurgist in the FBI crime laboratory in Washington, DC. In 1976 he was promoted to a Supervisory Special Agent and in 1986 became the civilian equivalent of the FBI's Chief Forensic Metallurgist. In this position, Mr. Tobin was the leading expert, nationwide, in the law enforcement community on forensic metallurgy (i.e. the examination and analysis of material's deformation and damage).

In this position, Mr. Tobin was qualified as an expert witness on behalf of the FBI or the U.S. Government in over 200 local, state and federal courts. He served as the FBI's leading forensic metallurgist on thousands of cases, such as the UNABOM, Judge Robert S. Vance mail bomb murder case and numerous accident/

[1] The FBI's pre-clearance regulations appear to conflict with the Lloyd-La Follette Act of 1912, which "guaranteed the right of federal employees to communicate with members of Congress." *Arnett* v. *Kennedy,* 416 U.S. 134, 150 (1974). The FBI's refusal to recognize the right of agents to communicate with members of Congress is very troubling and is not in accordance with either the laws of Congress and the United States Constitution.

disaster cases (i.e. the Escambron. Beach Puerto Rico Oil Spill, the Willow Island West Virginia Scaffold Collapse, the Wilberg Coal Mine Disaster in Utah, the Panama City Florida Train Derailment, the USS Iowa explosion and the Mobile, Alabama Train Derailment). In his 24 years in the crime lab Mr. Tobin provided forensic analyses in approximately 75–100 aircraft incidents (i.e, ranging from mechanical failures to suspected sabotage to actual crash damage examinations).

In regard to the July 17, 1996 crash of TWA Flight 800, Mr. Tobin arrived in New York at the crash reconstruction site on August 4, 1996. He devoted his efforts as the FBI's chief metallurgist at the crash reconstruction site for 89 straight days, and as necessary thereafter. The science of metallurgy is the only scientifically appropriate discipline to evaluate metal damage and causes of the metal damage of the recovered parts of Flight 800. Mr. Tobin was the most scientifically qualified and experienced metallurgist involved in the evaluation of the crash damaged materials in the law enforcement community.

Mr. Tobin repeatedly raised concerns to FBI personnel and officials who were in control of the "criminal" investigation of the crash of TWA Flight 800. Mr. Tobin will answer questions regarding the concerns he raised, the bases for these concerns, the administrative response to these concerns and the impact of these concerns on future disaster/public safety investigations.

For three decades Mr. Tobin loyally and effectively served the American public, first, in combat, second as an agent for the FBI and then as a scientist for the FBI. He continuously obtained "exceptional" or "outstanding" performance ratings and was the recipient of numerous awards and recognitions, including five separate commendations and cash awards issued by two directors for the FBI and a personal commendation from the U.S. Attorney General. At the TWA crash investigation site in Calverton, New York, Mr. Tobin stressed the importance of strict adherence to the professional scientific process, despite the pressures from federal law enforcement officials in charge of the investigation. The actions of Mr. Tobin, and other investigators at the crash scene, prevented a false identification of the cause of the crash. Had Mr. Tobin and others succumbed to the pressure to validate the "bomb" or "missile" theories, the public safety of the American people would have been betrayed.

FREEDOM TO RAISE CONCERNS

The ability of FBI employees, such as Mr. Tobin, to freely raise concerns within the FBI is of particular concern to counsel for Mr. Tobin. At the time Mr. Tobin raised concerns to the FBI officials responsible for overseeing the TWA Flight 800 crash investigation, the FBI/DOJ internal operating rules prohibited FBI supervisors from taking adverse action against an FBI employee who raised such concerns. However, the Department of Justice has proposed new "whistleblower" regulations for the FBI. These regulations do not protect FBI employees from retaliation for concerns raised to their supervisors or other officials within the Bureau.[2]

In addition, the regulations do not provide the right to a hearing on retaliation-related issues, do not provide for judicial review and do not mandate that an independent judge or agency review retaliation cases. In short, under the new regulations, an FBI employee, such as Mr. Tobin, could be fired merely for informing his supervisor that "bad science" is involved in a case. In order to insure that FBI employees in the future will be free to raise concerns, such as the concerns Mr. Tobin will testify to during this hearing, the proposed DOJ regulations must be substantially changed.

CONCLUSION

On behalf of Mr. Tobin and his co-counsel, I thank the Chairman and members of the Subcommittee on Administrative Oversight and the Courts for the opportunity to share our views and present testimony before this Subcommittee. The importance of effective oversight cannot be underestimated in insuring the effective operation of government in its law enforcement and public safety capacities.

---

[2] These regulations are seriously deficient and are currently being challenged by three former FBI employees in U.S. District Court. The regulations *only* protect employees who contact the DOJ Office of inspector General, DOJ Office of Professional Responsibility or the FBI's Office of Professional Responsibility. The proposed regulations not only fail to protect FBI employees who raise concerns directly to supervision, they fail to protect FBI employees who report concerns to the U.S. Congress, the Attorney General, the Director of the FBI or even the President of the United States.

Senator GRASSLEY. At this point, I would like to ascertain if a Mr. Andrew Vita, our next witness, is in the audience. He is here? Then we are going to proceed with Mr. Vita. Would you come forward, please.

As I said, Mr. Vita is our third panel. Andrew Vita is his entire name. He is Assistant Director of the ATF for Field Operations. Mr. Vita's testimony is of great value to the subcommittee. He has many years of experience as a Federal law enforcement officer and as a senior manager within the ATF. He also has a reputation for high integrity, and I thank you for that. He was directly involved in the issues surrounding the ATF CFI report.

Mr. Vita also rushed back to Washington, and this is why I owe him a particular thank you, because he did it at much inconvenience to him and his family. He had previously had a weekend planned over Mother's Day, and so, obviously, it is an inconvenience not only to him, but his family. So we are very appreciative of your being here, Mr. Vita.

I have sworn other witnesses, so I would like to have you rise and raise your right hand and say, do you promise to tell the truth, the whole truth, and nothing but the truth, so help you, God?

Mr. VITA. I do.

Senator GRASSLEY. Thank you. As I have asked everybody else, an opportunity to say whatever they want to, but at the very least, I would like to have you share your background, your expertise, and what your role was in the TWA investigation.

TESTIMONY OF ANDREW VITA, ASSISTANT DIRECTOR, FIELD OPERATIONS, BUREAU OF ALCOHOL, TOBACCO, AND FIREARMS

Mr. VITA. Senator, I have been with ATF for 29½ years. I began my criminal investigative career in Chicago as a Special Agent and have moved up through the organization in various positions of increasing responsibility.

During that tenure, I have also been the supervisor of one of our national response teams. I had that responsibility for 3½ years while I was the ASAC in Philadelphia, during which time I had an opportunity to conduct a number of investigations of major explosive and fire scenes that have occurred around the country.

In addition to that, since coming into headquarters, I have overseen the development of the majority of our criminal enforcement programs, both in the firearms and explosives areas, as well as our other areas of responsibility, and currently, I oversee all of our field operations.

Senator GRASSLEY. Before I ask questions, do you have anything you would like to open with?

Mr. VITA. No, sir. I do not have an opening statement.

Senator GRASSLEY. We have just delivered the copy of the ATF report. Is this the report that was prepared by the ATF certified fire investigators in 1997?

Mr. VITA. Yes, Senator, it appears to be.

Senator GRASSLEY. Could you explain the bottom line of the report?

Mr. VITA. I think, Senator, it probably can be best explained through one section of the synopsis, probably in better words than

I could summarize, and then another section on the last page of the report.

This document was prepared by our certified fire investigators, a team of investigators, along with our fire protection engineer, who reviewed the facts and circumstances and the evidence that was available on the date on which they prepared this report. It was to document our investigative findings and our kind of capturing in time what our opinion was as to what may have caused the downing of this aircraft.

The report itself was developed over a period of time in collaboration with representatives from the NTSB and other investigators who worked on the TWA 800 flight investigation. The report itself is a documentation of their opinion, based on theory and scientific evidence. It is critically important any time we document our findings or our opinion that we not only provide what we believe to be an accurate representation of the element that caused this event to occur, but in our process, we also try and make sure that we investigate as many of the other potential theories as possible so that we cannot find that there is a conflict between theories.

As important as it is for us to prove what we believe did happen, it is equally as important to make sure that we can show that other theories are not equally as convincing or compelling. So we will try not only to prove our position, but will also look to try and disprove other potential positions.

This report was done by three very experienced investigators who had a great deal of past experience and had an opportunity to work at the scene in Long Island for a number of weeks and it really documents their findings. What they say is that their investigation shows that the center fuel tank failed as a result of a fuel air explosion. The event occurred at an altitude of approximately 13,800 feet. The air speed of TWA 800 at the time was approximately 400 miles per hour. This explosion caused structural failures of parts of the aircraft which compromised its airworthiness.

At the time, Senator, you must realize that there was still investigation going on. There was a number of investigative pursuits that had to be explored. But what they were trying to do was document what they saw after evaluating the physical evidence recovered from that scene and thoroughly examining the airplane itself, what remained from the airplane, to capture at that moment what they believe to have been the cause of that crash.

It also leaves enough room so that there were a few parts that were missing, as in any puzzle. In this particular case, there were a couple of electronic components that were not recovered. There were some pumps and some probes and some other electronic elements of the system that controlled the fuel exchange within that aircraft that had not been recovered for a whole host of reasons.

This report basically documented what we believe most probably did happen, but that we also had the opportunity that if those other components were recovered at a later date, or if additional evidence came to light that was not available at the time the report was written, that we would be able to explore the evidentiary value of those new findings to further revise and refine the final opinion of the reporters.

Senator GRASSLEY. How convinced was ATF that the cause was a mechanical failure as opposed to sabotage?

Mr. VITA. At the time that the investigators wrote this report, they saw evidence of a mechanical failure. You bring up the point sabotage. I would think that if there was an effort to sabotage this aircraft, there is always the possibility that the saboteur would try and make whatever event caused the downing of this airplane to appear to be a mechanical or accidental nature. That would be a very realistic possibility.

Because we say there was a mechanical failure, to then further explore the possibility that this mechanical failure may have been influenced by human intervention was another issue that had to be explored, as well, and I know as the investigation continued, we are always looking for evidence of such behavior. I am not aware that any was found in this particular case, but it is something that needs to be explored to its full extent.

Senator GRASSLEY. How qualified were the experts who worked on this report?

Mr. VITA. The three CFI's that worked on this report, as well as other people that contributed to it, are probably as skilled criminal investigators in the fire science and explosive investigation as there is in Federal Government. I think these people are the renowned experts, at least within our organization.

As we progressed through this investigation, I had an opportunity to travel to New York in late September 1996 and I had a chance to watch the processing of the evidence that was there. I had a chance to go through the hangars that were being used for the reconstruction of various systems that comprised that aircraft.

While I was there, I had a number of the investigators that were working from ATF, from the NTSB, from the FBI, and the other contributing agencies give me a series of briefings on the progress of that investigation. As I watched and listened and made my own personal observations, as well as processed the information that they were providing, it was very important for me personally to understand the theories that were being provided so that I could understand and that I would feel comfortable with conveying a final report on behalf of ATF as to the origin and cause of this matter.

When I supervised the National Response Team, I tried in every investigation to remain neutral as our investigators, our scientists, and all of our other technicians reviewed the facts and circumstances of their investigation, and only at the end of that investigation did I allow each of them to kind of brief me and try and explain to me and convince me that this is, in fact, what actually did happen in the series of events.

I did the same thing with this report. As the investigators proceeded with it, I had periodic briefings, and then when they kind of concluded with the investigation, at least as far as processing the evidence that was available, I had them come into Washington and provide a briefing for me and explain to me their theories, and I listened and I asked a lot of questions about some contrary opinions and some other views that may have conflicted with their theory.

Throughout their examination and discussion, they were able to provide a very compelling argument for the theory that they pro-

vided, and I think even on one of the reports that I saw from them, I had written a note that it appears that the conditions are very ripe for the theory that you have described, but it is critically important that you are able to say exactly what caused the spark that may have been the initiator that caused this event to occur.

At the time we discussed this, the key elements of that decision were not available, and those were some of the pumps and some of the probes that were a part of that system. Because they were not available, we could not actually analyze those elements, which could be very important to the final decision, but the conditions certainly existed at that time in that center fuel tank of that aircraft that it appeared that a mechanical cause was probably the cause of the downing of that airplane.

Senator GRASSLEY. When the report was concluded, you attempted to deliver one copy to the NTSB and one copy to the FBI. I am going to send something up for you to look at, but my general question is, would you tell us what happened subsequent to that? What we are delivering to you, are these your handwritten contemporaneous notes that were made, and could you walk us through the sequence of events as reflected in this chart here?

Mr. VITA. Yes, Senator, this does appear to be my contemporaneous notes. As we concluded our portion of that investigation, we discussed how the information should best be conveyed to the appropriate authorities who were responsible for that investigation. Those deliberations include not only representatives from ATF, but also representatives from the Department, so that we could properly and most professionally deliver our findings and our opinions at that time to the appropriate authorities.

We briefed the Under Secretary's office, the Under Secretary of Treasury's office, in February 1997. At that time, I had the same team that briefed me in December come back with the answers to the questions that I had presented to them, as well as any more additional or conclusive findings that they may have developed, and provide a briefing to the Under Secretary's office.

At the time, the Assistant Secretary for Enforcement was Mr. James Johnson, who was present during that briefing. I believe Under Secretary Kelly was unavailable on the date that we brought our people in. But we went over and discussed the issues and talked about our findings and the status of our review and report and how it should best be conveyed to the appropriate authorities.

During the same time, I had an opportunity to talk both by phone and in person with Bill Esposito. Bill was, at the time—I am not sure if he was the Assistant Director for their investigators or he had been promoted to the Deputy Director, but at some point during our very cordial relations, that promotion occurred, and I am not sure where he was at the time we had our discussions.

But during those discussions, I had mentioned to him what our people were doing on scene and what this report that we were going to put together was going to be. I explained to Bill that it was, again, as I mentioned, kind of a snapshot in time and documentation of what we had viewed and kind of what our opinions of as to the cause and origin of that explosion.

I had asked Bill—I had advised Bill that we would be very happy to provide a similar briefing for the Director of the FBI, as well as Bill and other representatives of NTSB and the FBI at any time on our findings and our recommendations. We were working to convey and kind of put that session together, and I kind of left it in Bill's hands to set that up. The last discussion that he and I had had on that topic was that he was going to look into the availability of the people that would like to participate.

Once our investigation, at least that point of the investigation, had concluded, we finally decided that it was important to convey that report as quickly as possible to the appropriate authorities, and at the time, the FBI out of the New York office was in charge of the investigation, as we understood. So we had asked that our Special Agent in Charge in New York, who was Jack Balles at the time, convey that report to the Assistant Director for the FBI, who was Jim Kallstrom. I believe that occurred on about—right around March 13, 1997.

In Jack's initial attempt to deliver the report, he met some resistance from the FBI as to accepting the report, and eventually, I had to intervene and directed Jack to make sure that that report was delivered to the FBI.

Prior to coming to ATF, I was a designer and my background and training were such that as I reviewed the findings of our investigators that was documented in the report, that I had an understanding of the possibility that perhaps there could be a design flaw, if the opinions that were reflected in this report were accurate, that there could be a design concern within the construction of that aircraft that could be common to other airplanes made by that same company at or around the same time.

I know in most products, as they go through an evolutionary design, they are improved periodically as the product is remanufactured, and I would be sure that, as time went on, that design that may have been present in the airplane that was made when this plane was may not have been consistent for a great amount of time after that airplane was kind of readdressed or maybe redesigned.

So I wanted to make sure that if this design characteristic that was found in this airplane, if that was present in other planes of that same vintage, that the appropriate authorities would have an opportunity to examine those aircraft to ensure that the same occurrence that happened on July 17 did not reoccur on another aircraft of similar design.

So it was very important to me, both from a criminal investigative perspective and from my past design background, that the appropriate information was delivered to the appropriate authorities so they could make those judgments, and if there was corrective action required, take that corrective action.

Senator GRASSLEY. Following up on what you just said, and not disputing anything that you said, I want to, in regard to how these notes would have been received, ask in regard to Mr. Kallstrom, is it true that he would not take them at first, but later was kind of forced to take them?

Mr. VITA. Well, I had gotten most of my feedback from one of my deputies who was in discussions and consultation with the SAC in New York and he conveyed to me that the FBI was reluctant to ac-

cept the report that we had written. It was my opinion that it was so important, that that was unacceptable to me, and that is when I directed our Special Agent in Charge to ensure that the FBI did get a copy of that report on the date that we were trying to convey that to them.

Senator GRASSLEY. Then is it your understanding that Mr. Kallstrom called Assistant Secretary Kelly in order for the report not to be released?

Mr. VITA. Well, I can only interpret that from occurrences that came about after that first contact was made. I had received information from Director John Magaw, the Director of ATF, from conversations that I understood him to have had with Under Secretary Kelly about the delivery of the report. In my past conversations with Jack Balles, it appears that after he delivered the report to Mr. Kallstrom, that Mr. Kallstrom may have contacted Under Secretary Kelly directly about that report, and I do not know exactly what was discussed in that conversation.

Senator GRASSLEY. Do you have reason to believe that Mr. Magaw conveyed public safety concerns to Mr. Kelly but that Mr. Kelly disagreed?

Mr. VITA. Well, I know that the Director, Director Magaw, and I discussed this matter throughout this chain of events and we both were very concerned about the safety of the flying public and we wanted to make sure that the information was conveyed to the appropriate authorities.

Senator again, I make a distinction between the report and the information. It was most important for me that the information got to the appropriate authorities. If it was conveyed formally through that report, that would have been fine. But if it was not, as long as the information got to the appropriate authorities, that was the critical point for me.

Senator GRASSLEY. So in the final analysis, the NTSB never did get the report officially, but it did get a bootlegged copy of it, and the information was shared with the National Transportation Safety Board?

Mr. VITA. Immediately upon finding that there was some difficulty in getting that report to the FBI, I made contact with the investigators that wrote the report, the three CFI's. I talked to one of the three CFI's and asked him how involved the NTSB was in developing the theory that they had documented in their report. They convinced me that the NTSB had collaborated in a lot of the investigative work that had been done and were very familiar with the information that was documented in their report. As long as I was comfortable with the fact that the NTSB officials were familiar with the information, I was comfortable with the fact that that had been timely referred to that authority.

Senator GRASSLEY. Could I ask you to refer to your first notation, quote, as I read your handwriting, "Kallstrom upset with report, locks him into eliminating missile." Would you explain that, your handwritten note?

Mr. VITA. Yes, sir. The notations to the left of the quote that you just referred to is a time, a phone number, and another name. The name there is Donnie, which would have been Donnie Carter, who is one of my Deputy Assistant Directors, who would have been in

direct contact with Jack Balles. That was a note that I had kind of scribbled, scratched to myself after I had talked with Donnie, who had advised me that, from the conversation that he had with Mr. Balles, that this was the impression that was given to him, that a reflection of Mr. Kallstrom's response to the report.

Senator GRASSLEY. Do you think insinuated in that is that if that were true, if you eliminated the missile, then the FBI would not have a case?

Mr. VITA. I do not know if I would say that, Senator, but I just documented what the response was, that Mr. Kallstrom had some concerns about the report.

Senator GRASSLEY. OK. Now, could I ask you to look at your second memo and explain that. You also have that in front of you.

Mr. VITA. Yes, sir. That is a contemporaneous note that I wrote to myself as we went through this process. If I can, because of the glare, I will refer to a copy that I have here before me.

Senator GRASSLEY. Could you just read No. 2 there, in your handwriting?

Mr. VITA. Yes, sir.

Senator GRASSLEY. It goes also over to page three.

Mr. VITA. No. 2 says that, "We have what we believe, whether right or wrong, evidence of possible design flaws in Boeing 727 airplanes"—now, 727 is a mistake, sir. It should be 747, but as I was writing here, I wrote the wrong number down.

Senator GRASSLEY. OK.

Mr. VITA [continuing]. "Which, again, we believe to be responsible to be responsible for the downing of TWA Flight 800. This same configuration exists in possibly 100 similar planes in the United States, which could result," it looks like—I am having trouble reading my own handwriting, Senator.

Senator GRASSLEY. I think it is "result."

Mr. VITA [continuing]. "Result in another similar air disaster." This is a xerox copy and it is a little bit tough to read.

Senator GRASSLEY. Yes.

Mr. VITA. Then going on to the next page, "and we are being ordered not to release that information to the appropriate authorities for no compelling good reason to risk hundreds of human lives." That is what it says, sir.

Senator GRASSLEY. Did your agency agree with this assessment?

Mr. VITA. When you say my agency, I can only express that I believe that this was kind of my documentation of my thoughts at the moment, after discussions with Director Magaw. I believe he shared a lot of the same feelings.

My real concern was that the information, again, Senator, was given to the appropriate authorities, and at the time, Under Secretary Kelly was a member of the Presidential Commission on Aviation Safety and Security, and I was of the understanding that if the Under Secretary saw that there was some concern for the safety of the flying public, his role in that commission would certainly have been an excellent opportunity for him to share that with the appropriate authorities. So I was confident that that would be done, and in my discussions with our agents about the drafting of their report, I was also confident that the NTSB was aware of the information that we had developed.

Senator GRASSLEY. What is the difference in the methodologies between the way that the FBI investigates an incident and the way the ATF does? For instance, ATF investigates accidents, but the FBI does not. How did this difference affect the TWA investigation?

Mr. VITA. There are probably several differences in our methodology in approaching those type investigations. Any major event, whether it is a major fire or an explosion, we go to the scene and try and get to the heart of where and how the explosion occurred, whether it was an explosion that may have caused a fire or if it was a bomb of some type, or even an accidental explosion.

We have authority under title 18 to examine not only criminal locations or criminal acts, but also accidental explosions, where there is a reasonable cause to believe that explosives could have been present.

When we approach that investigation, we have no preconceptions whether it was the hand of a criminal act or if it was an accidental cause to that particular situation. We try and examine the scene from the heart out. We go to the heart of the scene and follow the scientific evidence that we recover and evaluate to lead us to follow-up investigation, whether it be interviews or additional scientific work that needs to be done.

We try and focus our investigation at the scene of the crime, or scene of the occurrence. Oftentimes, I have seen the FBI's approach being differently in that they will try and take evidence from the scene to a separate location where they will reconstruct the situation as best they can. That is a little different approach than we take. We try and keep everything right there.

But, of course, when you deal with a mid-air crash such as this or mid-air explosion, there was no way possible that anyone could examine the evidence recovered at the location it was found. It had to be taken up off the ocean floor and brought to someplace where it could be examined. So that is a little bit of a difference there.

But we try and focus our investigation on the heart and cause of the investigation in place and then follow the evidence to wherever it leads us as far as processing that evidence and any interviews that we develop.

Senator GRASSLEY. Then how did this difference in methodology you have just explained affect the TWA investigation?

Mr. VITA. As I mentioned, Senator, this is one of those rare circumstances that you could not examine the evidence where it was found. It is extremely difficult to first locate all the debris fields that would have resulted from that mid-air explosion and then retrieve that evidence, bring it up, and then bring it and catalog it as far as location that it was found.

As I remember, when I was in Long Island examining the evidence that had been recovered, the Navy, I believe, had used some side-scan sonar equipment to help locate the various pieces of the aircraft that laid at the ocean floor and did, I thought, an exceptional job. I thought that was a terrific use of technology to try and identify where pieces of that airplane ended up at the bottom of the ocean floor.

Those debris fields often—in this case, did provide the investigators some very valuable information as to what may have broken away from the airplane first in the course that the airplane trav-

eled. They found pieces of the nose in one place. They found pieces of wing and side panels of the fuselage at another place. And then they found the wings and the engine farther down course, which gave the impression, certainly, that the nose of the airplane was blown free of the aircraft in mid-air and fell as the rest of the plane proceeded down its course. There is some extremely valuable information gained from that. But the side-scan sonar that the Navy provided was invaluable in trying to document the location of all those pieces of evidence.

Senator GRASSLEY. Is it your view that the criminal nature of the FBI's methodology prolonged finding the cause of the crash?

Mr. VITA. Senator, when you say prolonged, I know that as you conduct an investigation, there are numerous theories that evolve during that investigation. There will be theories that agents within your own agency feel very strongly about that you need to further examine and totally explore until you exhaust all the potential for those leads.

Only when everyone is of the common understanding of the cause of that explosion can I feel comfortable with the final determination made by ATF. I have been on some very complex investigations where there have been a number of competing theories that evolve during the early stages of the investigation. So to say that they prolong the investigation would be unfair without knowing all the information that they potentially had. I would expect that they had information of perhaps a national security concern that I would not be privy to, nor would I expect them to share directly with me.

But I would expect and hope that if they did have that information, that they would thoroughly explore those leads until they were exhausted so that we could be absolutely sure that the findings that we did come to were accurate and properly represented the Federal Government's investigation of that matter.

Senator GRASSLEY. Would you compare for me the FBI and ATF's methodology in ruling out accidental and/or mechanical failure?

Mr. VITA. Well, I have not had much experience in dealing with the FBI in investigating an accidental explosion. Our work has been—when we have worked with them, in every case that I can recall, other than TWA 800, it was more from a criminal investigative nature.

We go in there and try and be as objective as we possibly can, Senator, as we approach that, and again, not have a preconception as to what may have caused the fire or the explosion that we are looking at. We do not go to an explosive scene and say, this is a bombing. We go to the explosive scene and say that there was an unexplained explosion here that we are going to have to determine how it happened, and that could have been a mechanical cause, that could have been an accidental cause, it could have been an act of God. There are all kinds of different events that may have occurred that triggered the explosion that ultimately caused the plane to crash. You look at lightning. Was there a possibility that lightning could have caused it?

Even though we have found what we believe to be the mechanical cause, we were never able to precisely explain the arc or the sparking that was the initial detonator to the explosion. That is

something that is done through science and theory without any firsthand experience or eyewitness accounts.

Senator GRASSLEY. You have advocated pre-incident protocols as a way to help future investigations. Could you explain what they are and why you feel they are so darn important?

Mr. VITA. Senator, interestingly enough, every time ATF responds to a major fire or explosive scene anywhere in the country, there are other agencies that also have jurisdictional concerns with those investigations. Invariably, you will have several agencies responding to a scene and bringing with them a tremendous amount of expertise, resources, ideas that would be of great value to the overall impact of that investigation.

We have seen, over time, especially in areas—perhaps I can use an example of national church arson task force. When there is a fire at a church or a house of worship anywhere in the country, ATF, the FBI, and State and local authorities will most likely be responding to those situations. It is very important for the efficiency of operations and the public's trust in the confidence of law enforcement that when we do respond, we operate very efficiently in a collaborative way and take advantage of the value that each agency brings to that scene.

For the last 2½ years, I have been trying to work—I started to work with Bill Esposito in developing pre-response protocols that both ATF and the FBI could use when we respond to major incidents. Too often, there is a dispute over who has lead agency status when we arrive at the scene, and that lead agency status oftentimes dictates to which laboratory evidence that is recovered is going to go for processing.

We need to have protocols in place so that when we do respond to those major incidents, that all responding agencies are working together, bringing the valuable assets and expertise that they have to that scene, and work together toward dealing with and identifying the source and the cause of that explosion or fire, whichever the case may be. It is important that we have these pre-incident protocols so that we do not have to rely on agency relationships in the field, personalities that may sometimes influence the way people work together. It is really critically important that we have this plan in place for the efficiency and effectiveness of our operations.

Senator GRASSLEY. Is the ATF explosives unit accredited?

Mr. VITA. Our laboratory is, sir, if that is the question.

Senator GRASSLEY. Yes.

Mr. VITA. Our laboratory is accredited, yes, sir.

Senator GRASSLEY. When was that done?

Mr. VITA. I believe that we were accredited in 1984.

Senator GRASSLEY. And is the FBI explosives unit accredited?

Mr. VITA. I do not know, sir. Not that I know of.

Senator GRASSLEY. I am done asking questions. Once again, I know you have gone way out of your way to be with us today and we really appreciate it. You and the ATF have been very cooperative, and most importantly, you have expressed from the early days of the investigation your concern about public safety and the work with the National Transportation Safety Board and the airlines to get that information out. Everybody that travels by air owes you

a great deal of gratitude for that approach. We thank you very much for your testimony.

Mr. VITA. Thank you, Senator.

Senator GRASSLEY. Our final panel, we have representatives of the FBI. We have Dr. Donald Kerr, Assistant Director of the FBI in charge of the Laboratory Division, and we have Mr. Lewis Schiliro, Assistant Director in Charge of the New York office.

I have had the occasion to work with Dr. Kerr and he has made many much-needed changes in the FBI lab, and not only for myself but for the American people, we thank Dr. Kerr for that. Mr. Schiliro is Mr. Kallstrom's successor in the New York office and we welcome both of you here.

Before you get seated, if I could go through the process of asking you to raise your right hand and say, do you promise to tell the truth, the whole truth, and nothing but the truth, so help you, God?

Mr. KERR. I will.

Mr. SCHILIRO. I do.

Senator GRASSLEY. Thank you. Be seated. I assume, Dr. Kerr, in your position as Assistant Director, we should start with your testimony and then go to Mr. Schiliro, and then we will have questions afterward.

PANEL CONSISTING OF DONALD M. KERR, ASSISTANT DIRECTOR, LABORATORY DIVISION, FEDERAL BUREAU OF INVESTIGATION; AND LEWIS D. SCHILIRO, ASSISTANT DIRECTOR IN CHARGE, NEW YORK DIVISION, FEDERAL BUREAU OF INVESTIGATION

STATEMENT OF DONALD M. KERR

Mr. KERR. Thank you, Mr. Chairman. I will assume that the rather long statement could be submitted for the record.

Senator GRASSLEY. Yes. Let me make it clear for both of you. We are aware of the fact that you have a long statement. It will be included in the record as submitted, and the most recent revision will be included, as well, and the same for Mr. Schiliro, if you could summarize.

Mr. KERR. That is good. We have saved a lot of your time, Mr. Chairman.

Senator GRASSLEY. Normally, in 5 minutes, we ask you to summarize.

Mr. KERR. What I would like to do is just quickly hit a few points about the present status of the FBI laboratory, our plans for responding to major crime and the scenes of other incidents, and a few other points that I think are material to the interests you have today.

First of all, with respect to accreditation, the FBI laboratory has been accredited in all eight of the disciplines for which accreditation is offered by the American Society of Crime Lab Directors, and that took place last September.

In areas where no accreditation is offered by ASCLD, such as digital evidence and certain areas of explosives investigation, we, in fact, are leading international efforts to try to come up with standards, guidance, and protocols that would support that. In the

case of digital evidence, we chair the Interpol group, as well as the standards working group in the United States. In the case of explosives, we are working with colleagues from ATF, and more importantly, with people from the United Kingdom, Ireland, Israel, Germany, and Australia in order to build up a body of knowledge to which people could be tested and shown proficient.

Last, with respect to the laboratory's current structure, we have, in fact, divided it into three branches, one of which deals with the traditional work with evidence and provides forensic examinations in all the disciplines. A second provides investigative technology support to our field offices and investigators. And the third includes, among other things, the response capabilities of the laboratory, which I will explain. Those latter are driven by our experience during the East Africa bombing investigations, after the embassy explosions, informed, as well, by the TWA 800 involvement that we had and prior major bombings, as well.

The FBI now has five rapid deployment teams with people identified by name. They are teams of investigators, scientists, and engineers. Each is based on one of our field offices, for example, New York, with Mr. Schiliro has one of them. Two are based on our Washington field office, one on Miami, and one on Los Angeles.

The Laboratory Division provides the scientific and technical component of that deployment team. They are, when on duty, expected to be able to move in a period of 4 to 8 hours. It includes a senior section chief from the Laboratory Division who then becomes the agent in charge scientific advisor on scene, backed up by Laboratory Division people here in our op center, just as we did it during the African Bombing case.

The roughly 20 people as part of the technical team, they are chosen from the disciplines that fit the incident. So, in fact, if it is a bombing, it would be rather heavier in chemists and explosives examiners and trace examiners. On the other hand, if it was another kind of event, it would have a different makeup, including people, for example, from the DNA Unit.

The other response capabilities that we include are drawn from our Bomb Data Center, which not only trains the bomb techs for State and local police forces across the country, but also the FBI bomb techs. Our senior bomb techs within the Bomb Data Center also have rendered safe authority for improvised explosive devices. They work closely with the Hazardous Materials Unit, which deploys when weapons of mass destruction are suspected. They are the people who deal with the chemical and biological threats, the majority of which, you are aware, have been hoaxes in the last months.

We have mobile laboratories that we can deploy, designed by the Army, actually, for treaty monitoring purposes, but it is a flyaway laboratory to support this kind of thing.

The last part of our deployment capability is one that came into play during TWA 800, as well. You have spoken so far about the people from the forensic examination part of the division. We are also responsible for the FBI disaster squad, which is used for disaster victim identification, largely based on latent prints as a discipline, increasingly using mitochondrial DNA techniques, as well.

So those people deployed in addition to the roughly 60 who deployed on TWA 800 from the Laboratory Division.

The first examiners on site were from what is today the Materials and Devices Unit, which encompasses a lot of what used to be the explosives group, and at the same time, the disaster squad appeared to work in conjunction with the medical examiner to help with identifying the victims as the remains were brought back.

Two of the laboratory staff members received significant recognition for their participation. One was Bob Heckman, who was, in fact, the examiner in charge of the case for the Laboratory Division and had a lot to do with the day-to-day interaction with the New York Field Office. The other was Steve Burmeister. Dr. Burmeister is head of the Chemistry Unit, and they are the people who did the work examining the explosive residues and determining what they were. It was a difficult piece of work to do because those pieces of debris had been in the ocean, so finding it at all was a major scientific feat.

A number of other people were recognized at a somewhat lesser level for their performance, among them, Mr. Tobin, who just testified to you.

We now plan for some of the coordination that you are concerned with joint training with NTSB. In fact, there is work ongoing for cross-training between the NTSB crash investigation courses and the courses that our evidence response teams get to be trained. We are responsible for training some 1,000 members of the evidence response teams in the field offices. It is a thing that started a few years ago. It is coming to a greater level of maturity today. But it is, in fact, the people who are most likely to be working the crime scene for the FBI before laboratory people arrive, and so the concern is that they be well-versed in discovering, recovering, preserving, properly packaging evidence for shipment for examination.

And lastly, a specific follow-up, again, from TWA 800, is the work we are doing with the Department of Energy's Pacific Northwest laboratory, together with the Naval Air Warfare Center, and, in fact, to do a specific set of field tests involving man-portable air defense systems fired at aerostructures to determine, in fact, what those aircraft structures look like after missile impact and also to look at what forensic information might be available from the firing position, because it turns out, for all the talk about these sorts of things in the past, that fundamental data is missing.

And while metallurgists and others had some sense of what they might look for in the debris from the airplane, in fact, at the firing position, people have rarely, if ever, looked for specific information that would be probative in terms of investigation. And even with respect to the damage to the aircraft itself, in most of the studies conducted by the Department of Defense, their concern ends when the airplane is hit and not so much with looking at damage mechanisms that might have forensic value to us. So we are trying to remedy that lack of knowledge at this point in time.

And that, Mr. Chairman, completes the update I wanted to give you and we can go on.

Senator GRASSLEY. Thank you, Dr. Kerr.

[The prepared statement of Mr. Kerr follows:]

PREPARED STATEMENT OF DONALD M. KERR

Good Afternoon, Mr. Chairman and Members of the Committee. Thank you for the opportunity to appear before you this afternoon to address the role of the FBI Laboratory in the investigation of TWA 800.

As you may know, I did not become Assistant Director of the FBI's Laboratory Division until October 1997, more than a year after the explosion of TWA flight 800 off the Long Island shore. I am familiar with the performance of Laboratory personnel in that investigation, however, and am happy to answer any questions you may have in that regard. Before discussing the details of the Laboratory involvement in that investigation, I would first like to provide a brief overview of current Laboratory operations.

I. Current Overview Of The FBI Laboratory

First, and foremost, the FBI Laboratory is stronger, more efficient, and better organized than it has ever been before. This is due in part to the important role of oversight, including that provided by this Committee, in ensuring the effective performance of all components within the Laboratory. Perhaps the most significant achievement during my tenure as Assistant Director has been the formal accreditation of the Laboratory by the American Society of Crime Laboratory Directors/Laboratory Accreditation Board (ASCLD/LAB).

Even before it became an official recommendation by the Department of Justice, Office of the Inspector General (OIG), accreditation by ASCLD/LAB was among the top priorities of Director Freeh. During the past several years, the Laboratory has undergone numerous internal and external reviews, enhanced its quality assurance system, and modified its policies, practices and procedures in preparation for accreditation. The FBI Laboratory includes eight disciplines for which accreditation is available through ASCLD/LAB. Those disciplines—Controlled Substances, DNA, Serology, Firearms/Toolmarks, Latent Prints, Questioned Documents, Toxicology, and Trace Evidence—were all fully accredited by ASCLD/LAB on September 11, 1998.

Two of the scientific disciplines that I believe are of particular interest to the Committee—explosives examinations and metallurgy—are not accreditable by ASCLD/LAB. With regard to explosives examinations, however, the chief of the FBI's Materials and Devices Unit, Dr. Tom Jourdan, has been tirelessly pursuing a program to provide for accreditation of explosives and hazardous devices examinations. Toward that end, Mr. Jourdan has examined protocols and policies of forensic laboratories worldwide and engaged in the exchange of information with France, England, Ireland, Israel, and Australia. As a result of these efforts, Dr. Jourdan hopes to present ASCLD/LAB with an accreditation program for explosives and hazardous devices at its annual meeting this September.

As for metallurgy, it is not presently an accreditable discipline under ASCLD/LAB for several reasons. First, forensic metallurgy is a narrow field of science with a very limited number of qualified experts. Second, metallurgical examinations are varied and often require a number of novel examination approaches. Since examination protocols must necessarily be general in their application, ASCLD/LAB has not developed a program for certifying the metallurgical examination procedures.

Although only eight of the Laboratory's disciplines were subject to, and approved for, ASCLD/LAB accreditation, all of the other disciplines throughout the Laboratory, including explosives and metallurgy, are held to similar standards.

A. RESTRUCTURING OF THE LABORATORY DIVISION

In February, 1997, the FBI Laboratory sought approval from the U.S. Department of Justice and the Office of Personnel Management to establish four senior-level scientists positions in the following disciplines: biological sciences, chemical sciences, physical/materials sciences, and computer/information sciences. Due in large part to the exemption from Title V hiring restrictions granted by the Congress, the Laboratory was able to select individuals who possess exceptional qualifications for these positions.

In addition, the Engineering Sections at the Engineering Research Facility at Quantico, Virginia have recently been assimilated into Laboratory operations. This restructuring will be particularly beneficial following the relocation of the FBI Laboratory to its new facility in Quantico. Construction is currently underway with a target relocation date of 2001.

B. EXPANSION AND UPGRADING OF PROGRAMS

During the past several years, the nation has witnessed several major catastrophic events which have required the immediate deployment of Laboratory per-

sonnel. The explosion aboard TWA 800, as well as the bombing of the federal building in Oklahoma City, highlighted the critical need for immediate assistance of scientific experts and evidence technicians at such mass disaster scenes. As a result, the FBI Laboratory established five Rapid Deployment Teams (RDT's) to respond to future crises.

Each of the teams includes Laboratory examiners and technicians, as well as a senior-level Laboratory manager who serves as Team Leader and liaison with the on-scene commander. Although the teams are configured primarily to address bombing and hazardous materials incidents, personnel from any discipline may be assigned depending on the type of event requiring their assistance.

The FBI's Evidence Response Team Program has continued to expand and Evidence Response Teams have been deployed around the world to major bombing crime scenes, most recently in East Africa. There are presently over 100 teams located in the various FBI Field offices. Approximately 700 Agent ERT members have received post-blast bombing crime scene training.

In February, 1997, the Explosives Unit of the FBI Laboratory was restructured, separating the Bomb Data Center (BDC) from the unit and merging the remainder of the unit with most functions of the Materials Analysis Unit to form the Materials and Devices Unit (MDU). The Chief of the MDU, Dr. Tom Jourdan, holds a Master's Degrees in Synthetic Organic Chemistry and Nuclear Chemistry, a Ph.D. in Chemistry, and has completed the U.S. Navy's Explosive Ordnance School, Basic Demolition Course.

Under Dr. Jourdan's leadership, the MDU has increased its personnel resources and technical capabilities. The MDU has four broad areas of responsibility: examinations of evidence associated with bombing matters, elemental analyses, scanning electron microscopy, and metallurgical/materials science examinations.

The bombing matters examinations involve the identification and intended function of recovered bomb components, as well as direct field support in bombing crime scenes. During the last couple of years, the following individuals have been added to the staff of the MDU.

Five bomb component and reconstruction examiners who have recently joined the MDU:

John K. Underbakke, B.S. in Criminal Justice, over 12 years of explosives training and experience in the military. Chief of the Army EOD Training Department and the Hazardous Devices School. Experience as field Evidence Response Team member.

Rex A. Stockham, B.S. in Chemistry, formerly worked as a Physical Science Technician in the MDU prior to going to Agent's Training.

Michael W. Hughes, B.S. in Chemistry, formerly worked as a Physical Science Technician in the MDU prior to going to Agent's Training.

John W. McSwain, B.S. in Accounting, Special Agent Bomb Technician (SABT) for over 5 years. Extensive experience in major bombing matters to include OKBOMB, SOURGAS, and East Africa Embassy Bombings.

Mark Withworth, B.S. in Aeronautical Engineering, SABT for four years. Extensive experience in bombing matters, to include a number of international bombing scenes.

Metallurgists:

Dr. Mike Smith, Senior FBI metallurgist who is presently receiving cross-training as an explosives device examiner.

Eric Jensen, M.S. in Physics.

In addition to its present staff, two applicants have been selected to join the MDU and are currently in a background investigation phase. One individual has a Ph.D. in Inorganic Chemistry and postdoctoral work in the areas of energetic materials, as well as analytical chemistry. This individual directs research and development for the testing of energetic materials and has conducted contract research for a number of domestic and international agencies. He brings with him significant hands-on experience with explosives. The other applicant has an M.S. degree in Physics. He is also a research scientist who has directed operations and research programs which involve the field testing of improvised explosives. In addition, he has managed the mathematical modeling of these energetic materials.

The staffing concept of the MDU has been to meld together individuals who possess extensive experience in hands-on, post- blast bombing crime scene search and component recognition/reconstruction with scientists who possess strong explosives backgrounds and academic credentials that complement and support the collection and examination processes, as well as research and development activities. It should be noted that in any major bombing investigation, the Laboratory employs an inter-

disciplinary team approach in which the MDU examiners work with colleagues from the Chemistry Unit and other forensic units of the Laboratory, as well as field crime scene search and bomb technician personnel.

In furtherance of its training mission, the MDU has centralized the FBI's post-blast investigations training and staffed it with the SABT instructors who also conduct the forensic bomb device examinations and reconstructions.

As a separate unit, the BDC has expanded and upgraded a number of its programs. SABT's have received expanded training and now, upon request, can assist as well as provide training to state and local bomb squads. The BDC provides program management and oversight to the Hazardous Devices School (HDS), at Redstone Arsenal, Alabama, which is the only source of certification for public safety bomb technicians. It also recently hosted a National Bomb Squad Commanders' Conference which was attended by over 130 participants. In addition, the BDC has been actively involved in a variety of research and development projects seeking to increase the technical capabilities of public safety bomb squads to safely detect, diagnose, and defeat bombs, with an emphasis on chemical and biological devices and large vehicle bombs. As part of its mission, the BDC provides planning and operational assistance to public safety bomb squads during special events, such as the recent NATO 50th Anniversary Summit in Washington, D.C.

The Hazardous Materials Response Unit (HMRU), which was formed in 1986, has expanded its programs to counteract the threat of terrorism involving nuclear, biological and chemical weapons. The HMRU has provided on-scene field support and special event support on an ever-increasing basis. It has provided training and equipment to FBI agents so that they can respond to criminal acts involving the use of hazardous materials.

As a result of its emphasis on nuclear and mitochondrial DNA programs, the FBI Laboratory has personal identification capabilities that can materially assist in the identification of remains. Such capabilities are available to support the identify of victims of mass disasters, such as bombings and air crashes and complement the capabilities of the FBI Disaster Squad.

C. PARTNERSHIPS

The FBI Laboratory is committed to and has long promoted interaction with other Laboratories on specific cases and in technical working groups examining broader issues. The Laboratory has established working partnerships with other forensic laboratories, including the New York State Police, the Texas Department of Public Safety, the Illinois State Police, and the Minnesota Bureau of Criminal Apprehension. These partnerships provide for bilateral exchanges in areas of quality assurance, audits, and training, resulting in stronger forensic programs for all.

The Laboratory has also been instrumental in the formation and technical leadership of numerous scientific working groups within the forensic community. The purpose of the scientific working groups is to develop and standardize protocols and analytical practices in disciplines such as materials analysis; friction ridge analysis, study and technology; imaging technologies; digital evidence, bombing and arson matters. Many FBI Laboratory examiners serve in leadership roles in these groups as they seek to bring together national and international experts to develop procedures, protocols, training and accreditation guidelines.

Similar arrangements have been developed between the FBI Laboratory and members of the Federal scientific community. Through partnerships with the Department of Energy, the Department of Defense, and the Environmental Protection Agency, the FBI has been able to share information and enhance forensic applications, the transfer of technology, research and development, and specialized training.

The FBI Laboratory's involvement in the TWA 800 investigation was an outstanding example of good quality assurance practice. The same procedures that are routinely utilized to ensure the integrity of evidence and guard against contamination in the FBI Laboratory were employed during the examinations at the Calverton Hangar, where the aircraft examination and reconstruction efforts took place. The FBI Laboratory assumed responsibility for preparing the hangar, and utilized examiners from the Chemistry Unit for analysis of control swabbings taken from the walls and interior portions of the hangar. The Laboratory arranged for a hazardous material contractor to cover the hangar floor with protective material to guard against contamination.

During and since the TWA 800 investigation the FBI Laboratory has been acquiring the most modern laboratory equipment and instrumentation to support forensic analyses, particularly those relating to bombings and weapons of mass destruction matters. In addition, Mobile Modular Laboratories have been configured for deploy-

ment to support on-site forensic analyses and examinations in a wide spectrum of environments.

As part of its research and development mission, the Laboratory has targeted critical areas which will enhance its support of major crime investigations. These efforts presently involve 16 internal research and development activities, as well as 30 counterterrorism research projects that have been outsourced to DOE national laboratories, private sector vendors and academic institutions. These initiatives focus on:

1. Field Portable Explosives Detection Technology
2. Forensic Evidence Analysis and Crime Scene Technology
3. Information Infrastructure Technology
4. Specialized and Examiner Training
5. Victim and Terrorist Identification
6. Remote, Render-safe Technology, Detection of Explosives and Neutralization Techniques
7. Hazardous Materials Response
8. Computer Analysis Response Team (CART)
9. Latent Print Automation

II. Laboratory, Support of TWA 800 Investigation

The FBI Laboratory responded quickly to the TWA 800 disaster on July 17, 1996. That evening, the Evidence Response Team (ERT) from the Newark Division of the FBI arrived at the scene. The following morning, three examiners from the Materials and Devices Unit at FBI Headquarters arrived in Calverton and were joined later that morning by three examiners from the Chemistry Unit.

The first week following the crash was devoted to the recovery of bodies. This was the first priority of all personnel who arrived at the scene. As a result, the only debris recovered was that which contained bodies and that which was floating and washed up on the beach.

During the course of the investigation, approximately 5,000 hours of on-site support was provided by Laboratory examiners. Laboratory support was maintained by teams who were rotated in and out during the investigation. Over a million pieces of debris were recovered. Explosive residue chemists conducted an exhaustive survey of wreckage that entailed over 9,000 swabbings and examinations. Tens of thousands of pieces of debris were visually inspected by bomb technicians, with 116 subsequently submitted to the Laboratory for further analysis.

It is important to note that the FBI Laboratory's on-site support was provided despite numerous other demands on its resources. Several examiners and evidence technicians were reassigned to New York from the ongoing investigation of the Kobar Towers bombing in Saudi Arabia. Others reported to New York from Atlanta where the Olympic Games were underway. Approximately one week after the TWA 800 crash, the bombing of Centennial Park in Atlanta occurred.

One of the major issues which arose during the recovery phase, was the storage of the quickly accumulating evidence. An FBI Agent from the Long Island Resident Agency arranged for the use of an empty Grumman/U.S. Navy hangar for evidence storage and ultimately for reconstruction of the aircraft. The FBI and ATF then provided mobile equipment for use in analyzing evidence at the site, while the U.S. Navy engaged a private contractor to map out the location of the debris on the ocean floor.

Security in and around the testing areas of the hangar was tight. Only designated laboratory personnel were allowed access and no weapons or ammunition were allowed inside the hangar. Personnel from the FBI's Chemistry Unit manned the testing area of the hangar from July 18, 1996, the day after the crash, until November 8, 1996. Throughout that time, all ships and vehicles used to transport evidence were swabbed to ensure that no pre- existing residues were present. In addition, over 9000 swabs and vacuum samples were collected and tested, including all recovered seats and floorboards and over 500 swabs were taken of the center fuel cell alone.

Over 60 Laboratory Division employees from the Evidence Response Team, Materials and Devices, Bomb Data Center, Chemistry, Trace Evidence, Latent Fingerprint and Special Photographic units worked on the case back in Washington, providing many additional thousands of hours of support.

On August 23, 1996, we announced that scientific analysis conducted by federal examiners had found microscopic explosive traces of unknown origin relating to flight 800. We also advised, however, that based upon all of the scientific and forensic evidence analyzed up to that time, we could not conclude that the flight had crashed as a result of an explosive device.

Shortly thereafter, on August 30, 1996, we announced that additional microscopic explosive traces of unknown origin had been found. We again reiterated that we still could not conclude that the aircraft was brought down by an explosive device.

These announcements came after extensive discussions among senior level scientists and the on-scene commanders. The Laboratory personnel noted that the finding of explosives residue without the corresponding blast damage could not yet be explained and cautioned against jumping to false conclusions.

The New York Office management carefully weighed the information provided by the Laboratory and, together with Director Freeh, decided to issue the above announcements. These events portray a careful, deliberative process in which scientific findings were given proper consideration and, ultimately, an appropriate public release of the information was made.

During the initial months, continued scientific testing continued to confirm that there was evidence of explosives residue with no evidence of bomb blast or missile effects. It was not until September 1996, that the Federal Aviation Administration (FAA) announced that in June 1996, the Boeing 747 known as TWA flight 800 had been used in a Bomb Dog training exercise. Although this announcement solved the anomaly of the bomb residue, it did not solve the mystery of the cause of the explosion.

The Laboratory's finding and reporting of these residues constituted the consummate *double blind* test. Through the practice of good science and protocol, the Laboratory confidently reported its findings at a time when there was no explanation for the presence of such residues.

A number of metallurgists from a number of different organizations worked on, or were consulted about, the TWA 800 crash. These metallurgists worked well together and were in agreement with the Laboratory explosives examiners that there was no indicia of blast effects or missile strike.

II. Lessons Learned

Earlier this year, an after-action meeting was held at Calverton to discuss the events surrounding the investigation of TWA flight 800 and to identify optimal practices for a future major aircraft downing investigation. The agencies attending the meeting were as follows: the FBI, the National Transportation Safety Board, the Bureau of Alcohol, Tobacco and Firearms, the Federal Aviation Administration, the Department of Defense—Office of Special Technology, Defense Intelligence Agency—Missile and Space Intelligence Center, Naval Air Warfare Center, Air Force Research Laboratory, and the Pacific Northwest National Laboratory. I would like to note that all attendees expressed satisfaction with the meeting and found it to be very constructive and productive. There was no sign of hostility, nor disagreement, among the participants.

At this meeting the need for a Memorandum of Understanding (MOU) between the FBI and the NTSB was recognized. This MOU would set forth each agency's role and responsibilities and define the interaction that should occur between the two agencies during the investigation of a transportation disaster.

The FBI and the NTSB also agreed to pursue cross-training of personnel in order to provide investigators with a better understanding of each agency's mission and responsibilities. As a result, the FBI's Evidence Response Teams will participate in NTSB Crash Investigation Courses and NTSB investigators will attend FBI ERT training. This cross-training will commence next month.

In closing, I would like to say that in the TWA 800 investigation and the more recent East Africa bombings, the FBI has demonstrated its ability to address major challenges wherever they may occur. The lessons learned have enhanced our capabilities and identified optimal practices that will help the FBI Laboratory to meet the challenges of the future.

Senator GRASSLEY. Mr. Schiliro.

TESTIMONY OF LEWIS D. SCHILIRO

Mr. SCHILIRO. Mr. Chairman, thank you so very much for having me today. I will just explain briefly, at the time of the TWA disaster, I was the Agent in Charge in New York of the Criminal Division and I was directed to report to Moriches Coast Guard Base some 2 hours after the flight went down.

And I flew out over the flight scene about 2½ hours after the plane went into the ocean, and I can tell you that everyone in-

volved in that task that night believed at first that it would be a search and rescue mission, that, in fact, we would find survivors. The response that we received from the Suffolk County Police Department, the Coast Guard, the New York City Police and Fire Department, and a lot of private craft was just absolutely phenomenal within the first few hours.

I can also tell you that as the Agent in Charge at the Coast Guard station that night that everyone involved was deeply and emotionally affected by what they saw. Their hearts went out to the families of those victims, and I have no doubt that the experience is indelibly etched in their minds. And having personally witnessed it, I can tell you that it is something that I will never forget.

I think, as I heard the testimony today, I think that just one or two points I think that are important to bear in mind, and that is how we saw the events at the time, or at least my 3 weeks that I spent out there. Certainly, the way that the aircraft went down, the fact that there was no warning, there was no radio traffic between the aircraft and the tower, the fact that it fell off the radar screen. I think the fact, also, that within a day, the witness accounts that described seeing the craft go down in a ball of flames, and several saw flare-like devices heading upwards. At least from the investigators that were on scene that night, it became a very, very difficult issue to deal with.

Particularly at the time of the tragedy, Ramzi Yousef was on trial in the U.S. District Court in the Southern District of New York and he was charged in a conspiracy to blow up 12 U.S. airlines simultaneously over the Pacific Ocean. Yousef's plot, for which he was subsequently convicted, was not the stuff of science fiction. In fact, he had already tested the theory of concealing a small-shaped explosive charge on an aircraft, a test that resulted in the death of a Japanese citizen.

It is against this background, Mr. Chairman, the sudden disappearance of an aircraft with no distress call in an explosive fireball, that we did—the FBI undertook a very massive and aggressive investigation, and we also had a fear, based on what the witnesses described to us, that if it were a human intervention, and particularly if it were a missile, that those responsible were still at large, and the geography of Suffolk County made that extremely difficult to contain. They, if, in fact, existed, were under the flight path of one of the busiest airports in the world and we know we needed to resolve that issue as quickly and expeditiously as possible.

I have no doubt from the testimony I heard today that there were issues created, certainly initially and over the course of that investigation, but I can assure you, today, I represent, I believe, some of the finest men and women in the FBI, and that is those of the New York office, and that we traveled some 9 miles out to sea and 150 feet below the ocean floor to recover over a million pieces of that aircraft in order to come to a sound both scientific and investigative resolution to that case.

That office also traveled most recently to East Africa to resolve the embassy bombings there. We were involved with many of the agencies represented here today in the World Trade Center bombing. We have a very proud, I think, tradition in New York of work-

ing terrorism cases and certainly working in a multi-agency environment.

But I welcome the questions that you have here today. I think it is an important issue, but I think, certainly, that there are many, many aspects of TWA 800 that we feel very proud to have been a part of.

Senator GRASSLEY. I thank you very much for your testimony.

[The prepared statement of Mr. Schiliro follows:]

PREPARED STATEMENT OF LEWIS D. SCHILIRO

Mr. Chairman, members of the Committee, thank you for inviting me to appear before you today to discuss the FBI's investigation of the crash of TWA Flight 800.

On the night of July 17, 1996, I responded to a page and was advised that a TWA 747 in the sky just off the south shore of Long Island had disappeared from the radar and was believed to have crashed. Because I was the Special Agent in Charge of the New York Office Criminal Division, I was directed to report to the Coast Guard Station at Moriches, New York and was assigned to oversee and direct the FBI's efforts for what we initially believed would be a search and rescue operation.

Upon arrival, additional reports came in that changed the nature of our mission, including that there had been a large explosion and fireball, that all communications from the plane had been normal, that no distress calls had been issued, and that numerous eyewitnesses reported seeing *flarelike objects* and other events in the sky. Within a day, the law enforcement team had interviewed numerous eyewitnesses, including some who witnessed the events while in the air, and many of them provided credible accounts of these *flarelike objects*. Recognizing the limits of our own capabilities, the FBI contacted the Defense Intelligence Agency (DIA) and requested assistance in evaluating these reports of events in the sky.

Two days after the crash, experienced analysts from DIA's Missile and Space Intelligence Center (MISIC) were on the scene in Long Island and accompanying FBI Agents on interviews and reinterviews of some of the eyewitnesses. The MISIC personnel who reported to Long Island are among the U.S. Government's foremost experts on shoulder launched surface to air missiles, known as MANPADS. They reported to us that many of the descriptions given by eyewitnesses were very consistent with the characteristics of the flight of such missiles.

In addition, at the time of this tragedy, Ramzi Yousef was on trial in the U.S. District Court in the Southern District of New York charged in a conspiracy to blow up twelve U.S. airliners, simultaneously, over the Pacific Ocean. Yousef's plot, for which he was subsequently convicted, was not the stuff of science fiction. In fact, he had already tested his theory of that resulted in the death of a Japanese citizen.

It is against this background—a sudden disappearance of an aircraft, with no distress calls, in an explosive fireball resulting in the deaths of 230 men, women and children—with descriptions by credible eyewitnesses deemed by government experts to be consistent with the flight of a missile—at the same time that one of the world's foremost terrorists was on trial in Federal court charged with an audacious conspiracy to attack American airliners—that the FBI launched its criminal investigation of the TWA Flight 800 tragedy, an investigation that would become among the most far reaching and thorough ever conducted by the FBI. If there was ever a chance, whether it was 10 percent or 90 percent, that this catastrophe was criminal, that a terrorist operating under the flight path of one of the nation's busiest airports had brought down an aircraft with a shoulder launched missile and could still be at large planning further attacks, it was critical that a proper and aggressive investigation take place immediately.

Hundreds of FBI Agents and other law enforcement officers responded almost immediately, including elements from the FBI/NYPD Terrorist Task Force, the ATF, Secret Service, U.S. State Department, Naval Criminal Investigative Service, U.S. Park Police, INS, Port Authority PD, Suffolk County PD, Suffolk County Park Police, Nassau County PD, New York City PD, NY State Police, along with the NTSB, the FAA, the Coast Guard and the United States Navy, whose divers worked around the clock risking their lives to recover the bodies of the victims and, later, the aircraft wreckage. In the first days after the crash, many of the law enforcement team were assigned to the Coast Guard Station in Moriches receiving the bodies of the victims of the crash and, in the following days and weeks, witnessing the autopsies conducted by the Medical Examiners Office. Mr. Chairman, as the Agent in Charge at the Coast Guard Station, I can tell you that everyone involved in that task was

deeply and emotionally affected by this experience and their hearts went out to the families of these victims.

As the Committee knows, the FBI's responsibility for conducting investigations in a case such as TWA Flight 800 flows from a number of Federal statutes, including, among others, terrorism, destruction of aircraft, crime aboard aircraft, false statements. In this investigation, the FBI and the law enforcement team initially focused on the possibility that the aircraft was destroyed by a missile, either a direct hit on the plane or a proximity explosion, a bomb placed on the aircraft, to include in the center fuel tank area. As a result of some of the initial interviews of mechanics and other information we received, the FBI also looked at that the possibility of Federal criminal violations applicable to any intentional violations of regulations or reporting requirements relating to compliance with certification procedures for aircraft products and parts, manufacturing quality control or maintenance and safety procedures. Our investigation included more than 7,000 interviews, including eyewitnesses, individuals in contact with the aircraft at both JFK and in Athens, family members, and passengers from the flight that preceded Flight 800; we reconciled and traced all luggage and cargo placed on the aircraft; reviewed all unusual event reports, stolen motor vehicle and boat reports, records of all boats traveling through New York Harbor and the area of Long Island, records of all drawbridge openings on Long Island for a three month period; our Laboratory conducted over 3,000 residue examinations and ultimately, together with NTSB, engaged in a massive reconstruction of portions of the aircraft. An outline of our investigative efforts is attached to my statement and is submitted for the record. The result of the FBI's 16 month long investigation was that no evidence was found which would indicate that a criminal act was the cause of the TWA flight 800 tragedy.

I understand that there are several issues of particular interest to the Committee and I would like to address them briefly. In the recovery effort, the FBI treated all the recovered wreckage as evidence and endeavored to maintain the best possible chain of custody of the evidence we could given the large amount of wreckage recovered (over one million items) and the fact that it had to be recovered, for the most part, from the ocean floor, 120 feet below the surface. All evidence was brought to the hangar at Calverton where it was initially handled by FBI evidence response teams and examined by certified bomb technicians, metallurgists, and chemists for explosive damage. Pieces exhibiting any unusual characteristics were referred for subsequent intensive testing/examination. As investigators, we knew from the outset that science and the work of scientists would play a crucial role in the investigation, as it does in many of our investigations. We, therefore, aggressively sought to locate and use the finest scientific minds and techniques available to provide insight and direction to our efforts.

Examinations and analyses were conducted by scientist from the FBI Laboratory as well as outside experts, including the U.S. Naval Air Warfare Center Weapons Division, China Lake, California; U.S. Army Aeromedical Research Lab Fort Rucker, Alabama; U.S. Air Force, Wright Patterson AFB, Aircraft Accident Investigation Office, Dayton, Ohio; Armed Forces Institute of Pathology Bethesda, Maryland; Defense Intelligence Agency, Missile and Space Intelligence Center, Redstone Arsenal, Alabama; Picatinny Arsenal; Hughes Missile Systems, Hughes Aircraft Company; a Contract Metallurgist recommended by the FBI Laboratory and Department of Energy's Brookhaven National Laboratory and Sandia National Laboratory.

I am well aware that there was some tension and disagreement between the New York Office Field investigators and metallurgists at the FBI Laboratory over the need for additional intensive testing of some of the recovered wreckage. The field investigators were mindful that the aircraft damage noted as being possibly indicative of a bomb or a missile could also be attributed to the stresses of the breakup of the aircraft. However, this investigation, and the possibility that the aircraft could have been brought down by a missile or a proximity missile explosion was, in our view, unprecedented.

As I understand it, the FBI, indeed the U.S. Government, had no baseline forensic data regarding a missile strike on a commercial aircraft such as a Boeing 747 to use as a basis of comparison. We sought additional intensive examination of what certified bomb technicians had identified as unusual pieces to see if there was anything unusual that could be observed. We firmly believed that we owed no less than a complete, thorough and exhaustive effort to the victims and their families. We did not desire to speculate or project results; we wanted, and the families and the American people deserved, the best science available to the government.

As I said earlier, we recognize the critical role of science in many of our investigations and we have a high degree of respect for the talents and insights provided by FBI scientists, who are among the finest forensic scientists in the world. They provide insight, direction and very often, the critical evidence necessary to bring a case

to a logical and just conclusion. However, it is important for all of us involved in investigations to understand and respect our various roles. Ultimately, when there is disagreement on whether or how to proceed, the responsibility for the decision rests squarely on the shoulders of the investigators in charge of the case.

The FBI conducted the TWA Flight 800 investigation in a professional, responsible, and methodical manner. We worked to ensure that we were thorough and complete before coming to a conclusion as to whether this tragedy was the result of a criminal act. Can you imagine, Mr. Chairman, if we had not pushed to look at every possibility, no matter how remote; if we had relied on cursory examinations by magnifying glass and not sought to use every sophisticated tool of science available to us to reach a decision in this case and later found out that this was a very sophisticated criminal act or had overlooked something that may have brought us to a different conclusion. I and all of the law enforcement people who worked on this would not have been doing our jobs and would have been, rightly, subject to harsh criticism.

Let me briefly address the issue of jurisdictional disputes with the NTSB. Mr. Chairman, you cannot have an investigation of this magnitude, with the level of media attention this case attracted, with the number of people and the number of agencies involved that ran for as long as this one did without from time to time having disagreements or differences of opinion that need to be resolved. When we had differences of opinion, we sought to, and, usually did, resolve them amicably. Some of these disagreements were the result of our very different methods of conducting investigations. The FBI had no problem in sharing investigative results with NTSB and the morning after the crash, we offered to have NTSB personnel participate in all our interviews. Overall, the cooperation between the FBI and the NTSB was excellent at every level. All of us who were involved never lost sight of the reason we were there, of the goal of our efforts, which was to determine what caused TWA Flight 800 to plunge in a fireball into the ocean with the terrible loss of 230 lives.

I would also like to address the issue of the ATF report dated January 20, 1997, concluding that the cause of the crash was a mechanical malfunction. ADIC Kallstrom received that ATF report on Thursday, March 13, 1997. On Monday, March 17, 1997, ADIC Kallstrom forwarded a copy of the report to NTSB Chairman, Jim Hall, as evidenced in the transmittal letter, a copy of which is attached to my statement. Allegations that the FBI attempted to hide the report from NTSB are ludicrous. It is also inexplicable that NTSB now fails to recall receiving Mr. Kallstrom's letter.

Finally, Mr. Chairman, I want to state for the record that the FBI's investigation of the TWA Flight 800 was one of the most thorough and finest ever conducted by this agency. We have learned much from the experience of TWA Flight 800 and have been working, under the leadership of the FBI Laboratory along with NTSB to institutionalize what we have learned, to incorporate it into our procedures so that we improve our response and investigative product in the event a tragedy like this recurs in the future.

In early March, in furtherance of this effort, we held a meeting at Calverton that brought together representatives of virtually all the agencies that participated in the TWA investigation. The meeting was productive and additional meetings will take place in the future. Separate from that effort, we have held several preliminary discussions with NTSB in an effort to write a Memorandum of Understanding between our respective agencies, to formalize and structure our relationship in a manner that leads to improved training, better understanding of our respective missions and investigative requirements and, better service to the American public.

U.S. DEPARTMENT OF JUSTICE,
FEDERAL BUREAU OF INVESTIGATION,
New York, NY, March 17, 1997.

Mr. JAMES E. HALL, *Chairman,*
National Transportation Safety Board,
Washington, DC.

DEAR MR. CHAIRMAN: Enclosed please find one copy of a "Statement of ATF Certified Fire Investigator", I/N 63122 96 0060 Z, dated January 20, 1997. This report was provided to me on March 13, 1997 by the ATF Special Agent in Charge in New York.

The publication of this unsolicited and premature report by the ATF violates the agreement made by them regarding their participation in this investigation. I believe it is unfortunate that ATF, for reasons that are unknown to me, chose to prepare a report expressing an opinion regarding the cause of this tragedy before the

investigation has been completed. It is an extraordinary violation of investigative protocol.

I have provided the original and a copy to FBIHQ and requested that the FBI Laboratory review the information in the report and contact ATF to obtain all information they relied upon to produce this document. I have also asked Director Freeh to express the FBI's displeasure regarding this incident to the highest levels of the ATF.

Sincerely,

JAMES K. KALLSTROM,
Assistant Director in Charge.

ATTACHMENT TO THE STATEMENT OF LEWIS D. SCHILIRO: OVERVIEW OF FBI INVESTIGATION OF TWA FLIGHT 800

I. TWA 800 Explosion

TWA 800 was on the tarmac at JFKIA for approximately 3 hours and 48 minutes prior to departure. The outside temperature was approximately 81°. The flight arrived from Athens at 4:31 p.m. and lifted off the ground at 8:19 p.m. At approximately 8:31 p.m. the flight experienced a mid-air explosion.

II. Response To Event

A. FBI RESOURCES

Initial response to scene: Hundreds of Agents.

Command centers established: New York Office, U.S. Coast Guard East Moriches, Westhampton Fire Department, Grumman—Calverton, Long Island.

B. FEDERAL/LOCAL LAW ENFORCEMENT RESOURCES

Response to the tragedy of Flight 800.

Federal response

FBI, ATF, NTSB, FAA, Secret Service, U.S. State Department, Naval Criminal Investigative Service, U.S. Park Police, INS, U.S. Navy.

Local law enforcement response

Port Authority PD, Suffolk County PD, Suffolk County Park Police, Nassau County PD, New York City PD, NY State Police and local town police.

C. OTHER AGENCIES

1. NY Fire Department and local Volunteer Fire Department.
2. Red Cross.
3. Suffolk County Medical Examiner's Office.
4. Clergy.

III. Recovery Efforts—Victims/Aircraft

First 3 days: Massive on the water recovery of bodies/plane parts.
Dive Efforts: 4,600 dives.
Search Area: 40 square miles.
Trawling Operation: 75 square miles.

A. RECOVERY OF VICTIMS

Two hundred and thirty victims recovered and positively identified.

B. RECOVERY OF AIRCRAFT

Ninety-six percent of aircraft recovered, approximately 1 million pieces.

C. RECOVERY OF PERSONAL EFFECTS

Thirty-nine thousand and six hundred items recovered.

IV. Airport Investigation—JFK Airport—TWA 800

One hundred and eighty-six interviews were conducted with all individuals who had access to TWA Flight 800. All met with negative results.

1. Security personnel.
2. Mechanics and fuelers.

3. Luggage/Cargo handlers.
4. Caterers/Food service.
5. Cleaners.
6. Customer service.
7. Ogden food service.
8. Outside contractors—i.e., in-flight movie, special catering, linen, dry cleaning.

B. PASSENGER/BAGGAGE RECONCILIATION

All passengers flight coupons were matched to the passenger manifest. All checked baggage was accounted for prior to departure.

C. CARGO RECONCILIATION

All cargo was identified from point of origin until placement on Flight 800. All shippers were identified as legitimate.

D. FAA/AIR TRAFFIC CONTROLLERS

- Air traffic controllers interviewed.
- Radar tapes duplicated and analyzed.
- Air Traffic Controller transcripts obtained and reviewed.
- Analysis determined no unusual activity.

V. Airport Investigation—Athens, Greece—TWA Flight 881

Four hundred and fifty-two interviews were conducted with all individuals who had access to TWA Flight 881, information requesting unusual person(s), events, objects, met with negative results.

A. PASSENGER INTERVIEWS

Three hundred and forty-nine passengers interviewed.

B. CREW INTERVIEWS

Seventeen crew members interviewed.

C. AIRPORT PERSONNEL

Eighty-six airport personnell interviewed.

1. Security personnel.
2. Mechanics.
3. Luggage/Cargo loaders.
4. Caterers/Food service.
5. Customer service employees.
6. Fuelers.
7. Outside Contractors—i.e., duty free merchandise, in-flight movies, linen, dry cleaning, etc.

D. PASSENGER/BAGGAGE RECONCILIATION

All passenger flight coupons were matched to the passenger manifest. All passenger baggage was identified.

E. CARGO RECONCILIATION

The authenticity of all cargo and shippers was verified. No cargo from Flight 881 was placed on TWA Flight 800.

VI. Bomb Investigation

A. VICTIM FAMILY INTERVIEWS

Two hundred and thirty-six victim family members from the USA, France, Italy, Sweden and Norway were interviewed. The results of all interviews met with negative results regarding possible sabotage, conspiracy to bomb or criminal acts. Five victim families refused to be interviewed.

B. PREVIOUS AIRCRAFT BOMBINGS

Investigators reviewed ten previous airline bombings covering a period of fourteen years. The purpose of this review was to identify vulnerable areas for the placement of explosive devices and modus operandi of individuals involved in bombings.

C. REVIEW OF COCKPIT VOICE RECORDER

The cockpit voice recorder tape contains 31:47 (thirty-one minutes and forty-seven seconds) of cockpit crew/ATC conversation. This tape starts while the aircraft is positioned at the gate prior to takeoff and ends at the time of the explosion. The CVR review disclosed no evidence of a criminal act.

D. INVESTIGATION OF CLAIMS OF RESPONSIBILITY

All claims of responsibility were without credibility.

E. COMMERCIAL HISTORY OF AIRCRAFT

The 25 year old Boeing aircraft was sold to Iran in 1975. Iran never took physical possession. The aircraft never left hangar in the United States and was never touched by Iranian personnel. The aircraft was returned to the TWA fleet.

F. MILITARY HISTORY OF THE AIRCRAFT

Military records reflect that the aircraft was utilized for troop transport on April 1–2, 1996, including 8 Explosive Ordinance Disposal (EOD) personnel were onboard. Records reflect that all troops were issued new uniforms and gear. Little potential for explosive residue transfer.

G. TRAINING CONDUCTED ON AIRCRAFT

On June 10, 1996, the St. Louis Airport Police Department conducted canine explosives training aboard the victim aircraft. The residue collected after the explosion of Flight 800 was consistent with the explosives utilized during the exercise.

Overseas law enforcement agencies routinely conduct canine training utilizing explosives with little or no documentation.

VII. Missile Investigation

A. WITNESS EVENT INTERVIEWS/PLOTTING

Two hundred and forty-four eyewitness accounts were analyzed. Witnesses' observations and their location in relation to the event were recorded, plotted and mathematically analyzed.

B. ROADSIDE CHECKPOINTS

Roadside checkpoints established in the vicinity of East Moriches to identify potential witnesses to the event or suspicious persons or activity. Investigation met with negative results.

C. CANVASS OF MARINAS

Tri-state area marinas were canvassed for any witnesses or suspicious activities related to the explosion. Investigation met with negative results.

D. POLICE DEPARTMENTS UNUSUAL EVENT/PERSON'S COMPLAINTS

Police Departments provided all 911 telephone calls and person's complaints reporting suspicious behavior/cars/boats in all precincts bordering waterways and JFK Airport for a period of two months prior to the event. Investigation met with negative results.

Twenty-nine 911 calls received by Suffolk County Police were investigated and met with negative results.

E. REPORTED STOLEN/ABANDONED BOATS

Reported stolen or abandoned boats in the tri-state area were identified and held for forensic examination. This investigation was met with negative results.

F. PREVIOUS ROCKET ATTACKS

Investigators reviewed nine missile attacks on aircraft during a fourteen year period. Those attacks occurred in the former Soviet Union, Afghanistan and Africa. The purpose of this review was to identify potential missiles utilized and launch sites. Forensic evidence from those aircraft were not available for comparison to Flight 800, therefore prompting our own testing.

G. REVIEW OF VESSEL TRAVEL THROUGH NEW YORK HARBOR

During the 24-hour period—371 vessells identified, area of Long Island.
One month period—20,000 records, area New York Harbor.

Investigation met negative results.

H. INVESTIGATION OF SUFFOLK COUNTY BRIDGE OPENINGS

Twenty thousand records obtained for every vessel that passed under three Suffolk County Drawbridges for 3 months prior to the crash and 2 weeks after the crash. Investigation met with negative results.

I. RADAR ANALYSIS

Radar data was collected, reviewed and analyzed by the FAA and an independent radar consultant who examined radar tapes and determined that what was depicted on the screen was NORMAL AIR TRAFFIC and NOT A MISSILE.

Sources of Radar Tapes

Nine FAA locations: Islip, JFK, Newark, White Plains, Stewart's Field, Riverhead New York, Trevose PA, North Truro MA, Cummington, MA.

Three other radar sources: Sikorsky Aircraft, National Oceanic and Atmospheric Administration—Boston and New York.

VIII. Calverton Investigation

A. EVIDENCE COLLECTION

Law Enforcement Team personnel supervised evidence collection and transportation from the crash site to the Calverton facility, always mindful of contamination and chain of custody.

B. EVIDENCE REVIEW AND ANALYSIS

All evidence received at the Calverton facility was initially examined by certified bomb techs, metallurgists, and chemists for explosive damage with negative results. Subsequent intensive testing/examination of pieces exhibiting any unusual characteristics was conducted by law enforcement, military, and independent experts and was met with negative results.

The following agencies/personnel provided additional expertise:

1. U.S. Naval Air Warfare Center Weapons Division, China Lake, California
2. U.S. Army Aeromedical Research Lab Fort Rucker, Alabama
3. U.S. Air Force, Wright Patterson AFB, Aircraft Accident Investigation Office, Dayton, Ohio
4. Armed Forces Institute of Pathology Bethesda, Maryland
5. Defense Intelligence Agency, Missile and Space Intelligence Center, Redstone Arsenal, Alabama
6. Picatinny Arsenal
7. Hughes Missile Systems, Hughes Aircraft Company
8. Independent Radar Consultant
9. Contract Metallurgist
10. Department of Energy Laboratories, Brookhaven National Lab, Sandia National Lab

C. AIRCRAFT RECONSTRUCTION EFFORT

FBI/NTSB projects resulted in extensive reconstruction of areas of the aircraft deemed to be vulnerable to a missile and/or explosive device.

The reconstruction project included the following:

1. Main 92 Foot Forward Fuselage
2. Aft Cargo Bay
3. Left and Right Wing Spars (front and rear)
4. Cabin Interior
5. Cargo Containers
6. Underbelly Fairing
7. Power Cable Routing
8. Left and Right Leading Edge Wing Structure
9. Nose Wheel Well and Surrounding Structure
10. Top Skin-Left Wing
11. Cabin Interior Carpet/Flooring over the Center Wing Fuel Tank
12. Flight Data Recorder (FDR)/Cockpit Voice Recorder (CVR) Wire Routing

13. Center Wing Fuel Tank Section

D. DAMAGE ANALYSIS

Combined metallurgical and engineering review of aircraft debris (reconstructed and non-reconstructed) IDENTIFIED OVER 1,400 PENETRATIONS and 259 AREAS OF MISSING FUSELAGE MATERIAL that WERE CLOSELY EVALUATED.

An alternate light examination (blacklight) of all aircraft wreckage for the purpose of identifying latent material deposits was conducted with negative results.

All wreckage was also inspected by industry experts for any evidence of drone aircraft impact with negative results.

E. RECOVERY ANALYSIS

The logged recovery location of all debris from the wings and the cabin structure was verified.

F. FORENSIC BOMB/MISSILE ANALYSIS CONDUCTED AT CALVERTON

Over ONE MILLION PIECES of aircraft debris VISUALLY INSPECTED by bomb technicians and laboratory personnel. This screening process included taking over 2,000 CHEMICAL SWABBINGS, x-raying all seat cushions and utilizing explosive detection canines on site.

Examination and analysis at DAVIS MONTHAM AIR FORCE BASE at Tucson, Arizona with STATIC DETONATIONS of man pads in pressurized and non-pressurized aircraft fuselage produced DAMAGE which was NOT SIMILAR to any WRECKAGE observed AT CALVERTON. ALL WRECKAGE was REVIEWED.

Inspection of missile damaged aircraft at the NAVAL AIR WARFARE CENTER (CHINA LAKE) revealed NO SIMILARITIES to the wreckage AT CALVERTON. ALL WRECKAGE was REVIEWED.

G. LABORATORY ANALYSIS

Man hours: 5,000
Examiners: 12
Residue examinations: 3,000

FBI/ATF Laboratory Conclusion:
No Evidence: High Explosive Damage
No Evidence: Explosion of a Missile Warhead
No Evidence: Missile Impact

Independent Experts Conclusions:
No Evidence: High Explosive Damage
No Evidence: Explosion of a Missile Warhead
No Evidence: Missile Impact

Metallurgical Examiners Conclusions Damage Consistent With:

- OVER PRESSURIZATION of the CENTER FUEL TANK;
- BREAK UP of the aircraft;
- FIRE;
- IMPACT of the aircraft into the ocean.

IX. Military Investigation—Friendly Fire

A. SIGNED CERTIFICATIONS RECEIVED FROM EACH CHAIN OF COMMAND

- All military assets within 200 Nautical Miles
- Documentation of all training exercises.
- Accounting of all armaments capable of reaching Flight 800.

B. INTERVIEWS AND INSPECTIONS

The crew of the following vessels/aircraft were interviewed and their ships inspected, due to their immediate vicinity to the crash site. Investigation determined the crafts were either out of range, unarmed or did not have the vertical launch capability of reaching Flight 800.

USS NORMANDY—U.S. NAVY CRUISER
USS TREPANG—U.S. NAVY SUBMARINE
USS ALBUQUERQUE—U.S. NAVY SUBMARINE
USS WYOMING—U.S. NAVY SUBMARINE
U.S. NAVY P–3 ORION

NY AIR NATIONAL GUARD—HH–60 HELICOPTER
NY AIR NATIONAL GUARD—C–130 AIRCRAFT
NY AIR NATIONAL GUARD—CC–10
CALIFORNIA AIR NATIONAL GUARD—C–141 (TRANSITING AIR SPACE)

X. Criminal Act/Non-Terrorist

Investigation was not limited strictly to terrorist motives. All avenues of potential criminality were explored with negative results.

XI. Public Response

Over 3,000 leads were generated through the establishment of the FBI 800 lines, Internet and U.S. Mail.

XII. Depth of the Investigation

There were a total of over 7,000 INTERVIEWS CONDUCTED in this investigation.

XIII. Issues

A. RUSSELL TAPE (RICHARD RUSSELL): "SALINGER'S MISSILE"

The SPLITT (GHOSTING) from the Russell tape IS FROM JET EXPRESS 18. Analysis by experts determined that the OBJECT WAS NOT A MISSILE, since it was positively identified. Object was a "Ghost" of Jet Express 18 which was at a different location.

B. THE LINDA KABOT PHOTO

The photo taken by Kabot depicts a bearing of north/northeast. TWA Flight 800 was south/southwest almost directly behind her.

Photograph analyzed by CIA National Imagery and Mapping Administration (NIMA) advised that:

1. There is object in photo
2. Object is not a missile
3. Object appears to be an aircraft, not possible to id aircraft because:
   - Not possible to determine distance of object from camera.
   - *Exact* time of photo unknown: (time frame only is known).
   - Insufficient detail in photo to determine type of aircraft.
4. Object is not a drone
   - No drone-exercises conducted near Long Island July 17, 1996.

C. HEIDI KRIEGER PHOTOGRAPH (STREAK IN SKY)

Negative was sent to FBIHQ for analysis, which determined that there was DEBRIS ON THE FILM SURFACE.

D. SEAT CUSHION RESIDUE (REPORTED IN RIVERSIDE CALIFORNIA PRESS)

The residue appeared red and flaky and was subjected to microscopic and chemical examination. The analysis determined the items were consistent with a chlorinated polymeric material, commonly used as CONTACT ADHESIVE. The red material is NOT ROCKET FUEL OR RESIDUE OF ROCKET FUEL. Three people convicted in U.S. District Court (one misdemeanor, 2 felony after trial) of charges related to theft of parts of the seat cushion from the hangar.

E. U.S. NAVY ACTIVITY IN W. 105–106–107—AREAS CLOSEST TO THE SHORES OF LONG ISLAND

The warning areas mutually co-exist with commercial air traffic and were open for COMMERCIAL USE ON JULY 17, 1996.

There were NO MISSILE FIRINGS FOR TWO YEARS prior to July 17, 1996, in the Whiskey 105–106–107 areas.

Military Search and Rescue Exercise conducted July 17, 1996. NO WEAPONS UTILIZED. NO WEAPONS ON BOARD.

NO TRAINING EXERCISES UTILIZING ANY WEAPONS were conducted in those areas on JULY 17, 1996.

There are designated live firing areas within the Whiskey areas. Artillery and small caliber weapons fire are authorized in these areas. The closest area of this

type is 86 miles east of the crash site. There was no Navy firing on July 17, 1996 in that area.

F. SALINGER/GODDARD STATEMENT

"I believe promoting the Navy-missile theory was a big mistake. I believe that the evidence is not sufficient to blame the Navy, and I wish to move away from that and all areas of conspiracy inquiry forever."

(Ian Goddard's E-mail to the New York Office dated 11/6/97 5:40 a.m.)

Senator GRASSLEY. Mr. Schiliro, in your new testimony that was submitted today, you attached an unsigned letter purportedly from Mr. Kallstrom that you refer to as a transmittal letter used to send the ATF report to the NTSB. Apparently, no signed letter exists, and according to the NTSB, no letter was received. Also, if you read the letter, it seemed to me the main purpose was to undermine and criticize the ATF report, not to transmit it as an official document.

So any objective reading of the evidence tells me that no official transmittal took place, and certainly an unsigned letter is no proof of anything. As an agent who collects evidence, I would hope that you would agree. What proof do you have that an official transmittal of the report was made?

Mr. SCHILIRO. Mr. Chairman, if I could respectfully disagree. In our original files, the original letter is signed out, as indicated by the block stamp on this file and a file number having been put in. The file copy, the one you have before you today, the one that was used for documentation, is not signed. That is usually the case in how the FBI maintains their files.

Having reviewed this, the transmittal letter, I would find it very unusual for the report not to have been transmitted to the NTSB on the date of March 17, 1997. But the file copy, the file you received, would not have been signed.

Senator GRASSLEY. Do you maintain a correspondence log?

Mr. SCHILIRO. The file copy that you see is our log. It is dated, or it is stamped with the file number 265–A.

Senator GRASSLEY. Where is the signed letter, then?

Mr. SCHILIRO. The signed letter would have been the transmittal letter, the one sent to NTSB. The copy letter, the file copy, would not have been signed.

Senator GRASSLEY. That was my next question. The NTSB does not have a record——

Mr. SCHILIRO. There is no doubt in my mind that this letter was sent and the copy was forwarded to NTSB.

Senator GRASSLEY. Then let me ask you, why do you think the NTSB never received it?

Mr. SCHILIRO. I have no idea, Senator.

Senator GRASSLEY. There are some heavy slashes and strokes through here. What is the meaning of that?

Mr. SCHILIRO. That was indexed into our file system in order to allow us to retrieve the document.

Senator GRASSLEY. Did Mr. Kallstrom tell you that he signed and sent the letter and report?

Mr. SCHILIRO. Not on this particular letter, but I have had conversations with Mr. Kallstrom about that report and I do recall hearing him speak of his conversations with the NTSB about it.

Senator GRASSLEY. I would say that it is my opinion that a lack of a valid copy lacks credibility. Of all the hundreds of documents that we have from Mr. Kallstrom, this is the only one that is not signed. That is a fact. This is the only one that is not signed, and we had boxes of documents delivered on Friday to us.

Does the FBI confirm that a psychic was brought to the scene of the TWA 800, and if so, why?

Mr. SCHILIRO. It is my understanding that that did occur, yes, sir. That was an inadvertent mistake on the part of the agent. He was out at Calverton at the time the psychic called in and asked to be allowed to appear and he allowed that to happen. But, again, as previously testified to, that was unauthorized.

Senator GRASSLEY. OK. Let me ask you, Mr. Kerr, is that your understanding, as well, that a psychic was there?

Mr. KERR. That occurred prior to my joining the FBI in mid–October 1997, so I cannot comment on it.

Senator GRASSLEY. Let me ask you from the standpoint of your being an outstanding scientist, still are, but before you took over, as well, what do you think of that, if that did happen?

Mr. KERR. Well, I sympathize with the position that Mr. Schiliro and Mr. Kallstrom were in. It was an unauthorized visit, and, I suspect, quite inappropriate at the time, and had they known of it, I expect it would not have happened.

Senator GRASSLEY. To both of you on another question, does the FBI acknowledge that the NTSB under title 49 has the lead on investigating accidents until there is a determination of a criminal act? Would you start out, Mr. Schiliro?

Mr. SCHILIRO. I do agree with that, Senator, obviously. I think, though, that each case has to be looked at individually, certainly the circumstances and the initial factual predicate that we usually undertake or attempt to undertake any investigation that we participate in. Certainly, specifically at TWA, the circumstances surrounding the way the craft went down and the possible involvement of a terrorist act on any one of them, but I think you have to balance that on each occasion and a separate determination made.

Senator GRASSLEY. How would you respond to the proposed legislation which would establish that all transportation accidents be investigated by the NTSB until evidence of criminal activity arose?

Mr. SCHILIRO. Well, I think the predication that you suggest is a valid one. However, I also think it is important to bear in mind that, certainly in TWA and other cases, there is a great deal of information that comes in to us outside of the actual crime scene, or accident scene, as the case may be, to include both human intelligence, international information that we receive regarding terrorist threats, and certainly electronic information that we are receiving, and I think there is a great need to balance all those things so that we can come to a just and expeditious resolution. To the extent that the public is in danger as a result of human intervention, that also needs to be taken into account, and I think it was certainly in this case.

But my experience, just as a caveat, at Calverton and certainly at Moriches, was a very positive one. The number of agencies that were involved, I think for the most part, the reaction, the bringing

to bear of a great amount of expertise, both within the government and outside the government, and I think, for the most part, it worked pretty well. So I think that, basically, the system did work as it should have worked.

Senator GRASSLEY. Was there any disciplinary action imposed because of the unauthorized visit by the psychic?

Mr. SCHILIRO. To my knowledge, no, although I believe the agent was spoken to about it.

Senator GRASSLEY. Dr. Kerr, when investigating a plane crash, does the FBI first rule out mechanical failures or design flaws in the aircraft?

Mr. KERR. In the part of the FBI that I am associated with and responsible for, we do not rule in or rule out. Our job, basically, is to collect and examine whatever physical evidence there might be and to reach whatever conclusions that evidence might allow.

The other thing we do is provide some of our technical people to support searches and other aspects of the investigation. They are typically not people who would be subsequently involved in examining the evidence.

Senator GRASSLEY. Mr. Schiliro, the same question for you.

Mr. SCHILIRO. Yes, basically, Senator, although I do think our focus is one of a criminal nature. I mean, our job is to determine whether or not there is evidence of a criminal act, to make that determination as fairly and as objectively as we can, and to the extent that the evidence rules that out, certainly, there are other agencies in this government that have the responsibility to determine the cause of that crash.

Senator GRASSLEY. In the case of your answer being yes, why was it not done, then, in the case of the TWA 800?

Mr. SCHILIRO. I think it was done, Senator. I think that the fact that over a million pieces of that craft needed to be recovered, the fact that it was 9 miles out and 120 feet below the ocean took some time to do. The fact of reconciling the manifests, the cargo manifest, the passenger manifest, the number of outside agencies we brought to bear to determine the best science that we could possibly bring to the resolution of that case, the fact that it took 16 months from the beginning until actually a final resolution was made, I do not find to be that extraordinary under these circumstances. And I think as soon as enough evidence was determined that there was no criminal cause, the FBI did remove itself, for the most part, from this investigation.

Senator GRASSLEY. I think that it is fair to say that today's witnesses disagree with you on that point.

Let me start with Dr. Kerr. Why were basic evidentiary procedures so clearly violated in the following: The removal of a seat cover without regard to blast damage location, the mishandling of the victims' clothing in a refrigerated truck, pulling fragments out of seat cushions without photographing and documenting alterations, and that is just three examples of a lot I could give, and I will not give any more, but you get the gist of the question.

Mr. KERR. No, I get the gist of the question. I am afraid that I have to plead ignorance. I was not there. I was not in charge at the time.

Senator GRASSLEY. Then I will ask Mr. Schiliro.

Mr. SCHILIRO. Senator, certainly, I do not dispute those renditions of what could have occurred in the handling of over a million pieces of evidence. There may have been some mistakes along the way. But I disagree to the extent that the number of pieces that we brought in, the fact that we had agents on each of the recovery craft that cataloged it. We did take GPS of the bodies recovered. The initial bodies, as you are aware, were not taken from beneath the sea. They were brought in from the surface. But the others were. I think it is a tribute to that effort that every one of the victims were recovered. The number of items that we logged in exceeded a million. To the extent that there were errors made in several of those, I mean, I do not disagree with that, but we made every attempt to maintain a chain of custody.

The issue on the photographs, I know that that became an issue early on in the investigation, but the reason, the simple reason for that was that if any of those photographs became evidentiary in nature, that we needed to maintain the negatives. It was no more or less than that.

And I think that, for the most part, the investigators out there did get along and did maintain a dialogue on those issues, and as they came up, there were every attempt made to resolve them. I kind of think that there is a sense that there was a great deal of animosity out there and I did not see that at all.

Senator GRASSLEY. Dr. Kerr, even though you were not there, so you could not answer my question, I assume that there is an understanding that the procedure does not follow scientific protocol, so what would you be doing to make sure that it does not happen in the future, then?

Mr. KERR. One reason we have invested so much effort both in training our own people in the Laboratory Division with regard to chain of custody and proper treatment of evidence and are extending that as quickly and as completely as we can to the Evidence Response Team is to avoid any question in the future about proper handling of evidence.

Senator GRASSLEY. Dr. Kerr, why is not the FBI's explosives group accredited like the ATF lab is? What is it that the explosives group does that lends itself to not being accredited?

Mr. KERR. I do not think that ASCLD has accredited the ATF lab in the explosives group, either. There are eight disciplines that are accredited and explosives is not one. A part of the explosives group that has to do with elemental analysis is, in fact, part of the accreditation, but there is no accreditation, for example, for the examiners who work on explosive components, for example.

Senator GRASSLEY. Is the explosives group ever audited to make sure that it is following protocols and procedures?

Mr. KERR. Yes, it is.

Senator GRASSLEY. Mr. Schiliro, why did Mr. Kallstrom initially refuse to accept the ATF report?

Mr. SCHILIRO. I do not know, Senator, if I would describe it as initially refused it. I think the problem was, as Mr. Tobin referred to the cardboard box theory, was before an opinion or a conclusion or a theory was finalized or written to report, that the whole box be looked at. At the time that report was written, the investigation

had not concluded yet, and I think he felt from our discussions with him that it was premature in nature.

The issue at that time certainly still could have been that had a criminal defendant been uncovered, that, of course, all the information that was going—that we wanted to be consistent with a final conclusion, and I think his feeling on this was, from our conversations with him, that it was premature, not that he was against the actual submission of it.

Senator GRASSLEY. Dr. Kerr, could you share with us the results of the audit of the explosives group?

Mr. KERR. Well, we actually have a quality assurance unit in the laboratory and a separate reporting chain and they, roughly quarterly, ascertain that the Materials and Devices Unit is, in fact, adhering to our requirements to follow the ASCLD procedures for handling evidence, maintaining the chain of custody. We do proficiency tests of the examiners and they are subject to the same moot court training that the examiners in the other disciplines in the laboratory are.

Senator GRASSLEY. I guess I would maybe later on ask you to brief us on that.

Mr. KERR. I would be happy to.

Senator GRASSLEY. Thank you. Let me start with you, Dr. Kerr, and Mr. Schiliro on the same question, why does the ATF methodology involve ruling out accidents prior to establishing a criminal act, while the FBI methodology is solely to prove a criminal act? Let me start with you, Mr. Schiliro.

Mr. SCHILIRO. I am not so sure I agree that we go into it attempting to prove or disprove a criminal act as much as it is an attempt, as ATF does, to objectively go in and determine a cause. Our focus, admittedly, is the enforcement and investigation of title 18. That is what we are there for. So I do not dispute the fact that we focus our efforts and our resources in a determination as to whether or not a criminal act occurred, and second, if an act did occur, whether or not a Federal prosecution will emanate from that.

I do not think, though, that is inconsistent with any of the agencies represented here today. And, as a matter of fact, in the TWA case, there were two distinct groups formed. One was the mechanical failures group and the other one was the law enforcement group, and I think that under the right circumstances, the investigative effort from each of those groups can be conducted in a consistent and objective matter.

The fact that we have a criminal focus does not necessarily mean that we are not objective in our approach to that. But by our very nature and by what we are charged with, the responsibility of, we do have a criminal focus. There is no dispute with that.

Senator GRASSLEY. Dr. Kerr, anything to add?

Mr. KERR. I would only add that there were a number of theories advanced both in the press by individuals who chose to come forward and, of course, by those who were witnesses to the event. Within that highly speculative environment, one has to review the physical evidence and as much of it as possible in order to rule out a number of the theories that were, in fact, on the table. So I do

not think it unusual at all, nor representative of a bias, to have the investigation go on for the period it did.

And, in fact, since I arrived as it was concluding, I did have the opportunity to talk to Jim Kallstrom. He was preparing to, in fact, go to the public with the results of the investigation in November. He was trying to assure himself, even in October and November 1997, that all of the leads, all of the possibilities, and all of the expertise that he might have been able to call on had been consulted. And so we, in fact, brought in several outside people to assist in reviewing the reports before he went public.

Senator GRASSLEY. Mr. Schiliro, in light of today's testimony, does the FBI still feel that the way that the TWA investigation was handled is a model for the future?

Mr. SCHILIRO. Senator, having seen the beginnings of it, at least for the first month or two, I was amazed at the great expertise that the NTSB was able to bring to bear in terms of the accident investigation. Truly, never having participated in an investigation of that nature before, it amazed me in terms of the expertise, the organizational skills, and how they went about organizing, actually, the reconstruction effort. It was just phenomenal in terms of this government, I think, at its finest.

Certainly, I think, we reacted from the Terrorist Task Force. I mean, we did send, for the most part, the people who are associated with that group out to participate that and to, certainly, if a criminal act had occurred, to investigate it and to resolve it.

I think, certainly, with the amount of people involved and absolutely the horrendous nature of that tragedy, there were issues that were created. I think most of them were resolved on-site. Some of them still linger, and others that you heard about here today. But I do not find that distressing. I think it is a constructive way to look at it. Obviously, if we had to do it again, there were certain things that we would go ahead and probably redo differently.

But, I think, bear in mind, we had never, at least in New York, reacted to a crime scene some distance out to sea and the distance that it was below the ocean floor. We needed to learn from that. We now are beginning a cross-training program with the NTSB, and, hopefully, the cultural differences will become less as that program proceeds.

But I do believe that that, in many ways, was a good effort. It brought together a lot of people of varying backgrounds—I think that was healthy—in terms of a resolution to this. If there were differences, those differences were debated and, I think, brought to light.

So I do think that, from what I saw from the agents and the investigators involved out there, the sacrifice that they put forth, and, I think, still the emotional issues that remain today as a result of their dealings out there, I do believe that it was a good effort. Do I think there were mistakes that could be improved upon? Certainly.

Senator GRASSLEY. I hope you have an opportunity. I am going to send you a list of the documents that were released today and after you study them see if you still have the same opinion.

Dr. Kerr, have you begun negotiating a memorandum of understanding with the NTSB for future investigations?

Mr. KERR. People from the Laboratory Division were involved in the after-action report, and the specific thing that I mentioned to you about the cross-training between the NTSB program and our ERT program is something we will work on. The agency-to-agency MOU is not something that I am responsible for.

Senator GRASSLEY. It is my understanding that there has not actually begun that process of that memorandum of understanding, and I suppose if I want to know why, I will have to ask somebody else other than you, then, is that correct?

Mr. KERR. That is correct.

Senator GRASSLEY. Mr. Schiliro, your statement says, "The FBI investigation of TWA Flight 800 was one of the most thorough and finest ever concluded by the agency." I draw a very different conclusion based upon the testimony and evidence presented here. I think that the public was ill-served by the FBI in the TWA Flight 800 investigation and I intend to make sure that this type of investigation does not take place again.

Dr. Kerr, are the rapid deployment teams the result of lessons learned from the problems discovered during the TWA case or any other case?

Mr. KERR. They are really an outgrowth of looking back at TWA 800, but more importantly, they were the result of discussions that Mr. Schiliro, Director Freeh, the Assistant Director in Charge of the Washington Field Office Jimmy Carter, and I had on our way to East Africa as we thought through what we had already been doing to deploy our capabilities and what we ought to be planning to do in the future. It was decided that we ought to formally identify these teams, train them, have their equipment ready for load-out in a short time so that our response could basically be as fast as finding the transportation to get there. So it was, yes, learning and finding a way to improve our response.

Senator GRASSLEY. The Inspector General, Dr. Kerr, last year raised the red flag that there were still cultural problems with the explosives group. At a minimum, I think the groups should be heavily and constantly audited to know if they are doing their jobs right, and I would like to know if you have that same concern.

Mr. KERR. Having watched them perform halfway around the world at two crime scenes the equivalent of the Oklahoma City bombing, I am not concerned with their present level of performance. They are doing it very well.

Senator GRASSLEY. So you disagree with the Inspector General, then?

Mr. KERR. He made the statement before that happened, I believe.

Senator GRASSLEY. Mr. Schiliro, this is in regard to the films being made by the FBI instead of the National Transportation Safety Board. If you needed to keep the negatives, where are those films now?

Mr. SCHILIRO. My understanding, Senator, is well over 400-and—and I could get back to you on this, but about 400 outside rolls of film were processed through our lab. My belief is we still have all those negatives.

Senator GRASSLEY. Why did you need to keep the whole roll and not give Mr. Zakar his pictures?

Mr. SCHILIRO. I am not familiar with Mr. Zakar's pictures, but the reason to keep the negatives is if any one of those pictures became evidentiary and we needed to introduce them in court, the U.S. attorney who did come out and review the procedures in place would have had to have the original negative. That was just solely the reason to maintain chain of custody on that.

Senator GRASSLEY. I thank you all very much for answering our questions. You are the last panel, so the hearing is over now. I thank all of the witnesses, and particularly the FBI, for cooperating with the subcommittee. I think the whole issue here is the efforts that agencies put forth to make sure that the traveling safety is there, the public safety is there, and also increasing confidence in Federal law enforcement.

The hearing is adjourned.

[Whereupon, at 4:22 p.m., the subcommittee was adjourned.]

APPENDIX

QUESTIONS AND ANSWERS

FORENSIC ENGINEERING INTERNATIONAL,
June 18, 1999.

Senator CHARLES E. GRASSLEY,
Hart Senate Office Building,
Washington, DC.

Thank you for your letter of June 8, 1999 regarding my testimony of May 10, 1999 before the Judiciary Subcommittee hearing on "Administrative Oversight of the Investigation of TWA Flight 800".

RESPONSE OF MICHAEL L. MARX TO A QUESTION FROM SENATOR THURMOND

Accompanying your letter was a question from Senator Thurmond asking if I had advised any of my superiors at the NTSB about FBI errors made during this investigation and if so, what actions did my superiors take.

From my standpoint the primary impropriety by the FBI was the handling of photographic evidence for the NTSB. As indicated at the hearing, I initially was not allowed to take photographs of the structure. Instead photographs had to be obtained and processed by FBI representatives. Photographs that I requested were never returned to me and to this day I have no idea if they were ever processed.

At a group meeting at NTSB headquarters in November of 1996, I informed the NTSB Office Directors that photographs were not processed as claimed by the FBI or, if they were, had not been made available to the NTSB. During that meeting, I was supported by Dr. Bernard Loeb, Director of the Office of Aviation Safety, to do whatever was necessary to obtain photographs. It was his support that gave me the courage to challenge the entrenched procedure of having all photographs processed by the FBI.

The NTSB had little or no control over the direction the FBI was taking during its investigation of the airplane structure. In-flight breakup deformations and holes obvious to investigators experienced in looking at fragmented aircraft structure were considered suspicious by management of the FBI investigation team. The FBI would not rely on the NTSB expertise regarding assessment of this damage. Instead the FBI brought in representatives of the Brookhaven National Laboratory (BNL) to do examinations of these holes even though BNL had no experience in looking at structural deformations of the magnitude involved. I notified NTSB management that the FBI was soliciting the services of BNL for these purposes and that I did not believe they were qualified to make a proper assessment of this damage. NTSB management made it clear to me that any of these examinations had to be at least overseen or be produced by NTSB, representatives instead of being left solely in the hands of inexperienced personnel.

In conclusion, I apprised the NTSB management about any problems or apparent improper investigative procedures initiated by the FBI and my management in turn directed or supported any changes that I felt were necessary to move forward with the investigation.

I appreciate being able to comment to any questions from your committee regarding this matter. Please feel free to contact me should you need further clarification.

Sincerely,

MICHAEL L. MARX.

NATIONAL TRANSPORTATION SAFETY BOARD,
Washington, DC, June 14, 1999.

Senator CHARLES E. GRASSLEY, *Chairman,*
Subcommittee on Administrative Oversight and the Courts,
Committee on the Judiciary U.S. Senate,
Washington, DC.

DEAR CHAIRMAN GRASSLEY: In response to your letter of June 8, 1999, requesting that I provide additional information concerning my testimony before your committee on May 10, 1999, offer the following:

RESPONSE OF HENRY H. HUGHES TO A QUESTION FROM SENATOR THURMOND

Question. You testified that the FBI made errors in the investigation, handling, and processing of evidence. Did you advise any of your superiors at NTSB of these errors? If so, what actions, if any, did they take with respect to them?

Answer. I and others advised Investigator-In-Charge Alfred Dickenson,Office of Aviation Safety Director Dr. Bernard Loeb, and NTSB Chairman Jim Hall of the problems related to the collection, processing, and safeguarding of evidence as well the investigative process on a continual basis.

Unfortunately, things such as an "evidence control log" which should be used to document all evidence submitted to any laboratory for examination or testing fell on deaf ears and was not accepted despite many complaints over a several month period by all the parties to the investigation. The absence of an evidence control log made it impossible to know what evidence had been removed from the hangers, what laboratory it had been sent to or by whom, what the nature and results or the tests were, and what the final disposition of the evidence was. To this day there are still unanswered questions concerning evidence sent for examination.

I saw little positive action taken by the NTSB to address these problems. In my opinion, we (NTSB) had a serious leadership problem during the course of the investigation. One of many examples of this was the Vice Chairman's Robert Francis absence on a daily basis from all daily investigative progress meetings. These meetings are critical in charting the progress and direction of an investigation. I have participated in over 110 major transportation accident investigations while with the NTSB and the TWA-800 investigation is the only one in which the NTSB Board Member in charge was never available to the investigative staff.

During the course of the on scene investigation, which lasted over a 15 plus month period, the NTSB Vice Chairman in charge of the NTSB investigation not only never showed up for daily investigative progress meetings, he gave away the Safety Board's authority, to without, to my knowledge, consulting the staff or the headquarters managers. It is easy to see how the FBI just resorted to their usual modus operandi of taking charge even if they didn't know what they were getting into.

The FBI made several mistakes however, to be fair the NTSB is also responsible for its share of errors, the most serious of which was the inexcusable absence of leadership.

In the event I may be of further service please do not hesitate to contact me at my office.

Sincerely,

HENRY F. HUGHES.

NATIONAL TRANSPORTATION SAFETY BOARD,
Washington, DC, June 15, 1999.

Senator CHARLES E. GRASSLEY, *Chairman,*
Subcommittee on Administrative Oversight and the Courts,
Committee on the Judiciary U.S. Senate,
Washington, DC.

DEAR CHAIRMAN GRASSLEY: This letter is in response to your June 8, 1999, transmittal of a post-hearing question from Senator Strom Thurmond. Below is the information requested.

RESPONSE OF FRANK P. ZAKAR TO A QUESTION FROM SENATOR THURMOND

Question. You testified that the FBI made errors in the investigation, handling, and processing of evidence. Did you advise your superiors at the NTSB of these errors? If so, what actions, if any, did they take with respect to them?

Answer. All of my observations concerning handling of the airplane wreckage and investigation procedures were verbally shared with other NTSB investigators and the NTSB investigator-in-charge that were working in the hangar. My concerns were also verbally transmitted within the confines of the hangar to the coordinators of the FBI who at that time oversaw the hangar operation. There was no aggressive effort on behalf of either agency (FBI and NTSB) to pursue many of the issues presented in my testimony before the Committee. I believe the control, organization, and philosophy of future investigations could be clarified by developing a memorandum of understanding between the two agencies.

If your office requires additional information, I can be contacted at my office.

Sincerely,

FRANK P. ZAKAR.

RESPONSES OF WILLIAM A. TOBIN TO QUESTIONS FROM SENATOR THURMOND

Question 1. The substance of your testimony appears to be that you had concluded by mid-September 1996 that the cause of the Flight 800 crash was mechanical. Was your conclusion in mid-September preliminary or final? Please explain fully.

Answer. My conclusion and testimony were that there was no indication of criminal activity, not that "the cause of the Flight 800 crash was mechanical." Absence of criminal activity does not, per se, suggest "mechanical failure". In my experience, non-criminal human performance issues have periodically been found to cause or contribute to transport, structure and/or system failures.

The terms "preliminary" and "final" imply a more distinct or emphatic delineation than warrants for the circumstances. I was very strong in my opinion as of the end of August 1996 that no criminal activity was evident. My opinion was sufficiently strong that, to use FBI resources more effectively, I urged keeping only a small contingent to represent FBI interests, e.g., one metallurgist and several local agents, as had been done with almost all other transport disasters I had worked the prior 25 years. I indicated that the NTSB was quite qualified and capable of recognizing unusual transport material deformation and damage and that having an FBI forensic metallurgist on site would maintain FBI interests and allow for escalating FBI presence if necessary or desired.

As strong as my opinion was by late August 1996, I was always open for additional information and data, should unusual circumstances be discovered. However, I considered that possibility very remote. As my colleague, Dr. Michael Smith, whom I was training at the time indicated when he returned from the Bruntingthorpe testing, even the smallest of charges (used in the tests) was so demonstrative that "* * * it was so obvious * * *" that we had no such indication on any of the pieces recovered from the TWA 800 crash. And, again, the charge used for the testing was miniscule compared to what could be expected from bombs or missiles.

Question 2. You testified that, in September 1996, all the metallurgists, including those from NTSB, and all the explosives examiners were united in their opinion that the crash was not the result of a bomb or a missile. Yet, in June 1997, Chairman Hall, testifying before the House Committee on Transportation and Infrastructure Subcommittee on Aviation said that the NTSB was pursuing six scenarios as the cause of the crash, including a proximity missile explosion and a small explosive charge placed in or near the center fuel tank. In addition, NTSB funded a series of tests at Bruntingthorpe, United Kingdom, that ran for several months from early to mid-1997 to test various theories, including the small-explosive-charge theory. Please explain the need for this continued study if there was no difference in opinion.

Answer. It was my understanding that the Bruntingthorpe testing was scheduled, among numerous other considerations, primarily to view an explosion of the center fuel tank. The NTSB was convinced early on that the initial reason the aircraft lost structural integrity was that the center wing tank exploded due to ignition of fuel vapor in the tank. However, they could not explain what ignited the tank and, therefore, all "scenarios" or possibilities had to be entertained until enough evidence existed to support one to the exclusion of the others. The additional testing was expected to show that the impulsive loading scenarios (bombs, missiles, shaped charges) would have left distinct physical evidence which would be identifiable in the wreckage. Since such testing was a rare occurrence and few 747's were available for repeated testing, testing for most of the "scenarios" was scheduled for the Bruntingthorpe tests.

In the light of Mr. Kallstrom's continuing insistence that "all the pieces of the wreckage [had] not been recovered", one of the reasons supporting scheduling the tests was that the tests would be useful to convey what was known to the forensic

metallurgists: that characteristics of bomb or missile damage would have been evident even if *substantially* less of the aircraft had been recovered.

Question 3. You testified that there were reasons you. did not take notes or otherwise document your examinations in TWA Flight 800. Please explain those reasons.

Answer. (1) By Mr. Kallstrom's own public representations, there were over one million damaged aircraft pieces and parts. Metallurgical examination notes would likely average two or three full pages *per part,* particularly when it would necessarily include a complete description of the part, its geometry and uniquely identifying characteristics (for subsequent identification). I would still be taking notes in Calverton, N.Y. today if in the normal forensic examination mode. This would have comprised an unduly burdensome and unwarranted effort, particularly inasmuch as no statutory authority existed for the FBI to "determine the cause of the crash", only whether any characteristic existed suggestive of criminal activity. The alternative would have been to record, "Metallurgical examinations revealed no characteristic indicative of criminal activity" one million times, a notation that would still require a complete description and measurements of each part to uniquely identify the item at a later date.

(2) The material damage and component failures were concluded to have resulted from low order explosion (fuel tank), impact and corrosion mechanisms, with enough representative parts to effectively and strongly indicate no FBI metallurgical or materials science involvement was mandated unless NTSB subsequently developed characteristics or indications of possible criminal activity or cause(s). This was obvious to Dr. Michael Smith (my colleague) and I within the first several weeks.

(3) Every recovered piece was examined *at least once* and *jointly,* by both FBI and NTSB metallurgists. I was part of the fracture sequencing group and regularly reviewed the logs/reports of the Metallurgy Group findings, which *all* parties signed, including metallurgists from the financially interested parties.

(4) I did not believe the taxpayers should fund duplicitous and costly note taking, particularly when there existed notes jointly obtained and agreed upon by all metallurgists involved; there existed a contemporaneous log and recording of the group's findings, we were all in agreement, and there was no indication of criminal involvement.

(5) Duplicitous notes have been used in the past to "muddy the waters" or to the serious detriment of interested parties in a judicial process. Two scientists will generally not take identical readings or measurements of *undamaged* and *undeformed* parts, let alone badly damaged (extensively bent and crushed) items.

(6) It was my conviction that prima facie statutory authority rested with the NTSB, and until they, my colleague or I concluded that material damage suggested a reasonable possibility of criminal involvement, there was plenty of time to "crank up" a forensic investigation and subject the appropriate pieces to extensive forensic examinations. There were no time or schedule exigencies which would have precluded extensive note taking immediately upon observation of a characteristic suggestive or criminal activity. As far as I am aware, the aircraft remnants are still in position as reconstructed in Calverton, New York.

RESPONSES OF ANDREW VITA TO QUESTIONS FROM SENATOR THURMOND

Question 1. You testified that ATF collaborated with the National Transportation Safety Board and other investigators in the preparation of the January 20, 1997, ATF report on Flight 800. Please elaborate on which agencies collaborated and the extent of such collaboration.

Answer. During the TWA Flight 800 investigation, the role of the Bureau of Alcohol, Tobacco and Firearms (ATF) was to support both the Federal Bureau of Investigation (FBI) and the National Transportation Safety Board (NTSB). Throughout the investigation, ATF worked with members of various multi-agency teams. The teams included all the member agencies of the FBI/NYPD Joint Terrorist Task Force, the Federal Aviation Administration, the Suffolk and Nassau County Police Departments, the United States Coast Guard, the United States Navy, the Airline Pilots Association, TWA, and the Boeing Corporation. ATF worked side-by-side with the other agency teams in the onsite recovery and examination effort, continuously sharing and exchanging ideas and expertise among the team members. The ATF Certified Fire Investigators' Report (CFI report) was based on information previously obtained from collaboration with other agency investigative teams, and ATF's conclusions regarding fire progression, independent research, fuel/air blast patterns and the lack of high explosive blast patterns.

Question 2. Prior to the preparation of the ATF report, did ATF inform anyone from the FBI at the Calverton facility, the FBI's New York field office, the FBI Crime Laboratory, or FBI Headquarters in Washington that ATF was preparing a report on Flight 800? Please explain.

Answer. After being briefed on December 23, 1996, by the CFI team, I directed the team to document their findings in a written report. I later advised Bill Esposito, Deputy Director of the FBI, that we were concluding our examination of the airplane wreckage and were preparing a report of our findings, which I offered to brief Mr. Esposito, the FBI Director, and any other FBI personnel at the earliest opportunity. Mr. Esposito indicated he would check with the Director's schedule and get back to me if they wanted a briefing. I believe this conversation occurred sometime early in 1997. Mr. Esposito never requested the briefing.

Question 3. You testified that, based on the information in the ATF report, you were very concerned about air safety and the possibility of design flaws in the aircraft. The report was dated January 20, 1997, but apparently there was a considerable delay before the FBI actually received it. When was the report provided to the FBI? Also, when did you become aware of the substance of the report's findings, and when did you become concerned about design flaws and air safety issues?

Answer. I was initially briefed by the Certified Fire Investigators concerning their findings as to the crash of TWA Flight 800 on December 23, 1996. I subsequently received a draft report of those findings. Upon my review, I requested clarification of certain technical references made in the report. The report was revised and signed on January 20, 1997. Subsequent briefings on the information in the report were given to Treasury Department officials. ATF delivered a copy of the CFI report to the FBI Assistant Director in New York City on March 13, 1997.

During the initial briefing in December 1996, I became aware of possible design flaws and air safety issues. I planned to have the final written CFI report transmitted to both the FBI and the NTSB. I was of the belief that NTSB personnel were familiar with the conclusions contained in the report as the result of ATF's frequent interaction with the agency throughout the investigation.

Question 4. Did the FBI invite ATF to assist in the investigation?

Answer. Within hours of the crash, the FBI Assistant Director in New York telephoned ATF's New York Special Agent in Charge and requested ATF's assistance in the investigation.

Question 5. Given the magnitude of the Flight 800 tragedy and the need to coordinate the law enforcement investigation and response, do you believe the FBI's protocols or conditions were reasonable? Did ATF follow these protocols? Please explain.

Answer. I believe that in any investigation, it is important for information to be shared among all the agencies to ensure that the collective knowledge of those involved is used to its fullest. I do not know of any specific protocols or conditions established by the FBI in this investigation.

Question 6. You testified that the ATF report was a "Snapshot" and that it was issued at a time when ATF was aware the investigation was continuing with many initiatives underway. Was the ATF report intended to offer a definitive conclusion about the causes of the Flight 800 crash?

Answer. The CFI report was completed after most of the aircraft had been recovered. The CFI report was intended to convey to the FBI and the NTSB the Certified Fire Investigators' opinions based on the information then available to them. The CFI report was intended to assist those agencies in their continuing investigations. The CFI report documented the opinion of the CFI investigators that a fuel/air explosion within the plane's center fuel tank caused the crash of TWA 800. The report further documents the lack of evidence regarding a high explosive initiation of the fuel tank and indicates that the fuel/air blast patterns identify an area of origin in the second cell from the rear on the starboard side of the center fuel tank. Investigation failed to identify any potential spark producing item in that particular cell except for a fuel indicator probe. Based on the process of elimination the CFI's concluded that this probe was the probable source of ignition. Due to the design of the probe it would have had to have been subjected to some unknown electrical feedback of sufficient intensity to generate the needed spark. The CFI's were unable to determine the specific source of the electrical energy, which could have bled into the fuel indicator system causing the initiation of the vapor mixture.

U.S. DEPARTMENT OF JUSTICE,
FEDERAL BUREAU OF INVESTIGATION,
Washington, DC, June 17, 1999.

Honorable CHARLES E. GRASSLEY, *Chairman,*
Subcommittee on Administrative
Oversight and the Courts,
Hart Senate Office Building,
Washington, DC.

DEAR SENATOR GRASSLEY: This is in response to your letter of June 7, 1999, which enclosed four follow-up questions concerning my testimony on May 10, 1999, at the hearing on "Administrative Oversight of the Investigation of TWA Flight 800." I am pleased to respond to these questions in an effort to clarify any misconceptions which may have arisen from the testimony provided by witnesses at the hearing.

RESPONSES OF DONALD M. KERR TO QUESTIONS FROM SENATOR GRASSLEY

Your first two questions addressed the accreditation status of the FBI and ATF Laboratories, specifically in the area of explosives examinations. The FBI Laboratory was fully accredited by the American Society of Crime Laboratory Directors—Laboratory Accreditation Board (ASCLD–LAB) on September 11, 1998, as recorded on Certificate of Accreditation No. 186. This certificate documents that the FBI Laboratory is accredited in the disciplines of: Controlled Substances, Toxicology, Trace Evidence, Serology, DNA, Firearms-Toolmarks, Questioned Documents and Latent Prints. This accreditation is granted for a five-year period provided that the laboratory continues to meet ASCLD–LAB standards and requirements. Thus, the FBI Laboratory's present accreditation will remain in effect until September 10, 2003, at which time the FBI will submit a new application for accreditation and undergo another on-site inspection.

ASCLD–LAB is presently capable of accrediting only the eight disciplines listed above. Therefore, the FBI enjoys a fully accredited status. Contact with ASCLD–LAB determined that the ATF Laboratory was initially accredited in 1984, but is presently accredited in only four of these disciplines (Trace Evidence, Firearms-Toolmarks, Questioned Documents and Latent Prints). Therefore, I am somewhat dismayed that an impression was created that the ATF Laboratory's accreditation status is superior to that of the FBI Laboratory's in that it is inconsistent with the facts.

With respect to the specific accreditation status of explosives unit personnel, it is important to note that explosive device construction and function examinations comprise a discipline that is not accreditable by ASCLD–LAB. However, the FBI and ATF chemists who conduct explosive and arson residue analyses are accredited by ASCLD–LAB under the trace evidence discipline.

Recognizing the benefits of operational assessment and conformance to established standards, the FBI Laboratory elected to have its non-accreditable functions (e.g. explosive device construction and function examinations, metallurgical examinations, etc.) operate in the same framework as its accreditable disciplines. Moreover, Dr. Thomas Jourdan, Chief of the Materials and Devices Unit, has taken the initiative to interact with the present and past head of ASCLD–LAB to plan for future accreditation of explosives and hazardous devices examinations. In furtherance of this endeavor, Dr. Jourdan and his staff have visited a number of foreign laboratories which have been heavily engaged in such examinations. These include: the Defense Establishment Research Agency Laboratory in Kent, England; the Northern Ireland Forensic Agency in Belfast, Ireland; the French National Laboratory in Paris, France; the Israeli National Police Laboratory in Jerusalem, Israel; and the Victoria Forensic Science Centre in Melbourne, Australia. The objectives of these visits have been the exchange of examination protocols and the establishment of consensus on good laboratory practice. The FBI Laboratory has provided its explosive device construction and function examination protocols to these laboratories for review and comment. In addition, the FBI Laboratory has been an active participant in the establishment of a Technical Working Group for Fire and Explosive Debris (TWGFEX) in cooperation with the National Center For Forensic Science, University of Central Florida, Orlando, Florida.

I would also point out that the FBI Laboratory presently has five examiners who are certified ASCLD–LAB inspectors who are periodically called upon to serve on inspection teams detailed to conduct on-site inspections of other forensic laboratories that are seeking accreditation.

Your third question dealt with the FBI Laboratory's experience in the investigation of accidental explosions. The Devices Operations Group of the Materials and Devices Unit (formerly referred to as the Explosives Unit prior to a restructuring

in 1997) has over the years conducted a number of suspected explosion investigations which were determined to be accidental. Some of the more notable of these include: the USS Iowa explosion in 1989; the explosion at the Navy Research Laboratory at White Oak, Maryland in 1992; the crash of PSA Flight 1171 in California in 1987, the crash of US Air Flight 427 in Pittsburgh, Pennsylvania in 1994; and the crash of Tarom Airlines Flight R0371 in Bucharest, Romania in 1995.

FBI explosive experts have provided forensic support to a number of aircraft bombing investigations. A listing of suspected/known terrorist activities targeting civil aviation were provided under Tab No. 15 in the briefing book that was compiled in response to your letter of April 8, 1999.

Your fourth question pertained to evidentiary protocols, namely the examination of seat cushions and consideration of their blast damage placement; as well as, a recommendation attributed to the Royal Canadian Mounted Police (RCMP) for the rinsing and protective coating of aircraft debris recovered from sea water.

Having checked with my staff, I am not aware of the removal of seat cushions without consideration to their blast damage placement. I am informed that the seat cushions were soaking wet when recovered and were initially placed in a separate hangar to dry. Many of the seat cushions were found disengaged from their seat frames and were recovered as floating debris. Determination of the exact location of these loose cushions in the aircraft prior to the incident would have been extremely difficult, if not impossible. Most of these seat cushions were impregnated with Jet-A fuel, thus posing a biohazard. Those seat cushions which had not become disengaged from their seat frames were left attached to the frames and were painstakingly placed in a hangar and arranged according to seat row and number.

Blast damage effects and placement would have been most evident on the seat frames, which were thorougly examined. Moreover, it would not have been possible to positively attribute seat cushion damage specifically to blast damage, impact with the water, thermal damage, or recovery, to the exclusion of the other causes.

I and my staff have no knowledge of seat cushions or seats being removed from the hangar without prior approval of the National Transportation Safety Board (NTSB). All explosive residue sampling of the seat frames and cushions was performed on-site and only swabs and vacuum samples were taken away for laboratory analyses. The FBI had full authorization from the NTSB to perform such chemical testing on the seats.

Members of my staff recall consideration of a suggestion to coat aircraft debris subsequent to its recovery from the ocean to reduce corrosion of the metal surfaces. The suggestion was attributed to the RCMP, but it was not clear as to whether this suggestion was communicated to the FBI by an ATF employee.

The suggestion was not acted upon because of concerns that a fresh coating of light oil would constitute an additional contaminant that would have a very negative impact on explosives residue sampling. This position was communicated to the investigators by Mr. Steven Burmeister, Chief of the FBI Laboratory's Chemistry Unit. The decision was made to not coat the debris and was reportedly agreed to by all parties.

I hope that the above information is of assistance. if I can be of any further assistance, please do not hesitate to contact me.

Sincerely yours,

DONALD M. KERR,
Assistant Director,
Laboratory Division.

RESPONSE OF FBI ASSISTANT DIRECTOR SCHILIRO TO A QUESTION FROM SENATOR THURMOND

Question. Please comment on how the FBI's efforts in the Flight 800 matter assisted and/or expedited the progress of the NTSB investigation or enhanced air safety.

Answer. The FBI did a number of things that assisted and expedited NTSB's efforts and enhanced air safety.

Beginning the very night of the crash, the FBI provided significant communication and logistical support essential to managing a tremendously chaotic situation. This included ensuring that each investigative team on land and at sea were equipped with voice privacy radio communication so that real time accurate information could be relayed from the various venues to the decision makers within the FBI and the NTSB. The FBI secured a mobile command post (Winnebago trailer) for NTSB's use at the Center Moriches Coast Guard station and provided NTSB telephone communications without which they would have been unable to effectively

manage the investigation. Also, contrary to statements by some at NTSB, it was the FBI, through its extensive liaison contacts on Long Island, that located and successfully negotiated with the U.S. Navy the use of the Calverton hangar, the cost of which was later funded by an appropriation to NTSB, where the massive amounts of aircraft debris could be brought and analyzed. The FBI also provided the telephone communications for NTSB at the hangar. Due in large measure to the efforts of the FBI with the Department of Defense and the U.S. Navy, the Navy dispatched a second salvage ship and a flag officer, Admiral.

The FBI and its law enforcement partners, working closely with the U.S. Navy and the U.S. Coast Guard, assumed the primary responsibility for securing the various debris sites, the recovery of victims and the recovery and transportation of wreckage to the Calverton hangar. This was a manpower intensive and a complex undertaking due to the ocean venue. The FBI also ensured that the evidence was collected properly with a well- established chain of custody in place. The FBI also provided round the clock security for the recovery operations and for the Calverton hangar up until mid-February 1998, approximately three months after the FBI withdrew from active investigation. In addition, the FBI Disaster squad was dispatched to the scene and worked tirelessly in the effort to identify the recovered remains of the victims. These efforts involved hundreds of FBI Agents and Professional Support employees from New York and throughout the country. Such an undertaking could not have been accomplished in such a timely, effective and legally sound manner without the direction of the FBI.

FBI investigation at the scene, at Calverton and throughout the world accomplished a number of tasks ranging from tracking down and interviewing all passengers and crew of TWA Flight 881 (Athens to New York) around the globe, to providing infusions of manpower on numerous occasions to look for particular items of debris located among the many thousands of pieces at Calverton or to complete a reconstruction project. If undertaken by NTSB, such efforts would have seriously strained their limited resources. It should also be pointed out that the main 92 foot reconstruction project of the plane's fuselage was initiated at the insistence and urging of the FBI to identify possible patterns of damage or directional forces in a three-dimensional perspective, despite the repeated objection and reluctance of many NTSB senior managers to take on such an investigative project. FBI Agents were an integral part of this and other reconstruction projects both in terms of providing the labor force necessary to build and with respect to, detailed analyses of the completed projects.

It was also at the urging of the FBI that the evidence collection effort continued after the cessation of diving operations on November 3, 1996 due to weather conditions. The FBI contracted for the services of four (4) scallop trawlers to literally "rake" the ocean floor for aircraft debris from November 1996 until the end of April 1997. Each trawler operated 24 hours a day, weather permitting, and was staffed by two FBI Special Agents who painstakingly separated sea life from manmade objects and ensured a proper chain of custody. Through such arduous and thorough efforts, the FBI and the NTSB and its parties were afforded an unprecedented opportunity to conduct further forensic and engineering analyses which assisted in the overall decision making process.

These are just a few examples of how the FBI not only addressed its own mission, but provided tremendous assistance and enhancement to the NTSB's investigation. It should also be mentioned that this view was shared on numerous occasions by NTSB personnel on the scene and by many of its corporate parties who not only expressed their sincere gratitude, but candidly commented that the investigation would have never proceeded in such a dynamic and thorough fashion had it not been for the massive infusion of FBI resources.

RESPONSES OF FBI ASSISTANT DIRECTOR SCHILIRO TO QUESTIONS FROM SENATOR GRASSLEY

Question 1. The NTSB made safety recommendations to the FAA regarding Center Fuel Tanks of Boeing 747 aircrafts in a report dated 12/13/96. Is it policy of the FBI to condemn NTSB safety recommendations as "pre-mature and ill-timed" as is indicated in the FBI report of SA Dennis Smith dated 12/15/96? Does the FBI have a policy of criticizing NTSB safety recommendations in transportation accidents as indicated in your portrayal of the TWA 800 investigation as a "model for the future?"

Answer. Your reference to SA Dennis Smith's "FBI report" as a "* * * policy of the FBI to condemn NTSB safety recommendations * * *" is mischaracterized. SA Smith is one of two specially trained FBI pilots who had previously attended NTSB

aircraft accident investigation schools and are fully qualified to conduct FBI aircraft accident investigations. Their primary role in the TWA 800 investigation was to act as the principal FBI coordinator with the NTSB and each of its participating parties.

The document that you refer to was not an official FBI report, but rather an informal note to FBI managers outlining his professional concerns regarding the methodology and justification supporting the NTSB's proposed safety recommendation. In SA Smith's view, which was shared by a number of the parties, the NTSB's proposed recommendation did not have a sufficient scientific or aeronautical basis to justify its issuance. SA Smith was also relaying his professional opinion to FBI managers. It was forwarded to FBI management for information purposes. At no time did the FBI publicize SA Smith's observations or try to influence or delay the NTSB's issuance of the recommendations.

Ouestion 2. Were any disciplinary measures taken against the FBI agents who were unauthorized into the hangar of which Mr. Hughs was a team member?

Answer. The FBI is not aware of any unauthorized access into the Cabin Reconstruction Hangar where Mr. Hughs was assigned.

Question 3. You testified that photographic negatives are "evidentiary in nature. " I understand the Bureau has reason to retain the negatives for evidentiary purposes. However, this does not preclude any *prints* that the NTSB required from being made. Please explain in detail why prints of Mr. Zakar's photos were of evidentiary value and why Mr. Zakar never received them in furtherance of his NTSB accident investigation. Since our hearing, what efforts have been made to get these photos to Mr. Zakar.

Answer. When the FBI takes photographs during the course of its investigations, the negatives are maintained as items of evidence in the exhibits section of the case file because the negatives are the "best evidence" and would be what is used in the event there were questions as to the validity of any photographs used at trial. While I have not had the opportunity to review a transcript of the hearing, I do not believe that I testified that the prints of Mr. Zakar's photographs were of evidentiary value and could not be provided to him. To the contrary, I believe that the FBI should have provided the prints of the film Mr. Zakar testified he submitted to the FBI for processing to him and I do not believe that I stated in my testimony that the requirement to maintain the negatives precluded providing prints to Mr. Zakar for his use in the NTSB investigation.

I have no information why prints of film that Mr. Zakar testified he submitted to the FBI for processing were not returned to him. The FBI's New York Office Photo Lab routinely processed thousands of photographs for the FBI, NTSB and other involved parties during the TWA investigation. The individual submitting the film to the FBI for processing had to fill out a short form to accompany the film to the FBI's photo lab for development. After developing, the photographs were forwarded to Calverton and turned over to the NTSB where they were deposited into an NTSB file cabinet divided by investigative group. There would be no reason to retain Mr. Zakar's photographs and not follow the established procedure. There were a few occasions when an NTSB investigator could not initially locate photographs which later were discovered either in the NTSB file cabinet or within the NTSB's record keeping system.

As noted above, photographic negatives are maintained as exhibits to the FBI case file. The TWA case file has an extraordinarily large number of exhibits. Since the hearing, the FBI has undertaken a review of the TWA file in an effort to locate the negatives of the film which Mr. Zakar testified that he provided to the FBI for developing. To date, that review has not located the negatives of any film submitted by Mr. Zakar. We will continue this review and notify NTSB of the results when completed.

Ouestion 4. Why did the FBI initially take the lead in showing the victim's family their personal items? Describe the use of your photo album and the subsequent relinquishing of this task to the NTSB. Is it common practice for the FBI to process victims' belongings in NTSB accident investigations?

Answer. At the outset of the investigation, all victim clothing and personal items were considered to be potential evidence in the case and were processed by the FBI and the participating law enforcement agencies. After processing, the personal property items were maintained in a room at Calverton. Valuable items were maintained in a safe at the Calverton facility. In early August 1996, the FBI established a policy that all documentary materials (address books, passports, drivers' licenses etc.) were to be photocopied and all luggage and personal effects photographed before return. The FBI and the NTSB were in agreement that personal property should be returned when it had been established by investigative and forensic personnel that

it is of no forensic, evidentiary or lead value. If there was doubt regarding the evidentiary or lead value of particular property, the doubt would be resolved in favor of retaining that property. These procedures were approved by the United States Attorney's office for the Eastern District of New York.

At a meeting on September 30, 1996 at the National Transportation Safety Board (NTSB), which was attended by Mr. Jeffrey Erickson, President of TWA and other TWA representatives, it was agreed that TWA, through a contractor, would be responsible for returning personal property, including the valuables, to the families and/or legal representatives of the victims of the TWA Flight 800 tragedy. TWA had engaged Kenyon International Emergency Services, Houston, Texas to handle this task. In addition, TWA agreed, through their contractors, to arrange for viewing of a photo album of unassociated items which the FBI agreed to prepare by the victims' families and/or legal representative of their estate. The FBI and NTSB agreed that TWA, through its agent, Kenyon, was responsible for the custody of the property of TWA's passengers recovered from the wreckage and the delivery of that property to the families of TWA's passengers once it had been determined that it was of no further investigative value.

In a letter to Kenyon dated October 28, 1996, a copy of which was sent to Chairman Hall at NTSB, the FBI advised Kenyon that the investigative/forensic review of the personal property had been completed and could be returned to the families and/or legal representatives of the estates of the victims. The FBI advised Kenyon that it would deliver to Kenyon's representatives at the Grumman facility in Calverton, Long Island, associated and unassociated personal property, including the valuables, recovered from the wreckage on Friday, November 1, 1998. At the same time, the FBI agreed to deliver multiple copies of a photo album of the unassociated personal property which may be used to identify the owners of these items. The FBI delivered three copies of the photo album to Kenyon on November 1, 1996. However, TWA reneged on the agreement with the FBI and the NTSB and directed Kenyon to refuse to take possession of the property and to display photographs of personal property to the families. There were numerous written and oral follow-ups with TWA and Kenyon by the FBI and NTSB, separately and jointly, in an effort to resolve the issue of the return of the property of the victims of Flight 800. The FBI also took a lead role in pressuring TWA to authorize Kenyon representatives to appear and discuss the issue with the families in February 1997 when the families were given a group tour of the Calverton hangar.

Ultimately, TWA, through Kenyon, did return personal items that had been associated with a victim and reproduced the photo albums of unassociated personal property supplied by the FBI. TWA eventually mailed a copy of the photo albums to each family requesting one for review. Procedures were also established whereby TWA or its contractor would handle claims for unassociated personal items. At no time during this process did NTSB ask for or indicate any desire to take custody of the victim's personal effects or express any objection or concerns regarding the FBI's role with respect to the victim's belongings. In early November 1997, NTSB accepted custody of these items from the FBI.

It is not common practice for the FBI to process victims' belongings in NTSB accident investigations. However, it is the practice of the FBI to conduct thorough and complete criminal investigations, which includes processing of all items that may be evidentiary in nature. It is for that reason that the personal belongings of the victims were initially processed by the FBI. While the FBI, with NTSB's agreement, did return some items of personal property that had been associated with a particular victim to the victim's family, the FBI did not take a lead role in either exhibiting or returning personal belongings to the families. As noted above, the FBI, with NTSB's support, strongly believed that this task was the responsibility of TWA and we were anxious for them to undertake that task. Contrary to what is implied by your question, the FBI and the NTSB were in agreement on the issues of victims' belongings and worked together closely in an effort to have TWA fulfill its responsibilities to return property to the families of the victims.

Ouestion 5. On May 22, 1999, a story appeared in the New York Times stating that the rank and file of the FBI was distributing a strongly worded letter to Sen. Grassley criticizing the TWA 800 Hearing by this Subcommittee. This letter has now been sent. Who initiated this letter?

Answer. The idea of sending you a letter from the employees of the New York Office was initiated by a "street level" agent in the New York Office. The letter you received was a collaborative effort by several agents, including some supervisory/management level agents whom the "street agent" asked for advice and input. All of those who were involved in the drafting process signed the letter. Although, as you know, senior management officials in New York were aware of and, in their individual capacities, signed the letter, the letter was not inspired, proposed, insti-

gated, orchestrated or any manner originated by management officials of the New York Office.

As I testified at the hearing, the enormity of the tragedy of TWA Flight 800 deeply affected all of us involved in the investigation. Each of us, management, Agents and Professional Support employees believed we owed it to the victims, their families and the American people to give them the most thorough and professional investigation that the FBI was capable of producing. They believe that is exactly what they did. These FBI employees are proud of their work and were offended to hear and read that you, your staff and some of your witnesses portrayed that effort as one rife with efforts that would "embarrass a rookie police officer." It is, I believe, why they wrote to you. With all due respect, I ask that as you continue to review this matter you also keep in mind that not only did we participate in this case as FBI employees and managers but also as parents, husbands and wives. It is in this regard that every effort was made to conduct a thorough and complete investigation ever mindful of the tragedy that had occurred. The letter presented was an attempt by the personnel in this office to present an accurate viewpoint and to, hopefully, provide a basis to understand that the protection of the public safety was our paramount goal.

Ouestion 5a. I noted that you, Assistant Director Schiliro, signed the letter in question. Do you think this is appropriate? In other words, how do you distinguish yourself as a private citizen in the letter and as an Assistant Director of FBI management in a Senate hearing?

Answer. Like all citizens, FBI employees enjoy rights protected by the First Amendment to the Constitution. I am well aware that the FBI has interests as an employer in regulating speech of FBI employees when that speech relates to and may affect the FBI's mission. The FBI's interests in promoting the effective and efficient discharge of its responsibilities must be balanced against the employee's First Amendment right to comment regarding issues closely related to the FBI's mission that may be matters of public concern. I am also fully aware that as a senior management employee of the FBI, I have a correspondingly higher duty of loyalty to the FBI; that the level of my FBI position may preclude me from publicly commenting on some issues of public concern and that I must be especially careful that there is no confusion regarding the capacity in which I am speaking when I do speak regarding issues closely related to the FBI's mission. Not only did I sign to endorse the position of the working agent, but I also signed to endorse their right to present this viewpoint. If I did not believe that signing the letter was an appropriate exercise of my rights under the First Amendment, I would not have signed it.

Ouestion 6. A Subcommittee interview of the Vice President of the TWA 800 Victims Association reveals that ADIC Kallstrom allowed many victims' families to enter the hangar and take pictures of the evidence. Please answer the following questions regarding this fact:

Why were relatives allowed to enter the hangar and take photos and the NTSB was not allowed to take photos in furtherance of their accident investigation?

Was the film taken by the relatives processed by the FBI lab as required by the FBI in regards to NTSB photographs?

Answers. Contrary to what is stated in your question, the FBI did allow the NTSB to take photographs in furtherance of their investigation. Procedures regarding wreckage photography by NTSB, including the wearing of red "safety vests" were agreed to by NTSB managers at Calverton early in the investigation. At the time, both the FBI and the NTSB were concerned about unauthorized photographs being taken and being misused to the detriment of the investigation as well as such photographs being exploited in the media thereby increasing the grief of the families of the victims. It should be noted that FBI personnel taking photographs were also limited in number and were required by the FBI to be wearing either hats or shirts that clearly identified them as FBI personnel. The use of the FBI New York photo laboratory to develop the photographs actually benefited the NTSB which did not have an available facility for processing and otherwise would have been taking their film to local commercial establishments for development, thereby increasing the risk that photographs would have been misused.

To my knowledge, there were two occasions in which victim's families were allowed to enter the hangar at Calverton to view the wreckage. These en-masse tours, the first of which took place in February 1997, were arranged in coordination with the NTSB. Prior to the two en-masse tours of the Calverton hangar by the victims' families, during preliminary briefings, it was made clear that no photographs were to be taken. I am told, however, that there may have been an isolated incident or two when during a private tour of the hangar, a family member may have taken a photograph of the cabin seat their loved one had last been seated in. In those in-

stances, the film was not taken or processed by the FBI when assurances were received that the photographs would not be released and that they would only be viewed by the immediate family. To have taken the film would have been an insensitive disregard for the painful emotions of the family and a disruption of the bereavement process.

RESPONSE OF LEWIS SCHILIRO TO AN ADDITIONAL QUESTION FROM SENATOR GRASSLEY

Question. Please comment on legislation proposed by NTSB in the proposed National Transportation Safety Board Amendments of 1999 regarding accident-scene priority and the impact such legislation may have should a future Flight 800-type case turn out to be the result of a criminal act rather than a mechanical failure.

Answer. The FBI strongly opposes the amendments affecting accident scene and accident investigation priority.

The legislation proposed by NTSB would, among other things,

(1) amend 49 U.S.C. § 1101 by inserting a new subsection b which would read "The term accident as used in this chapter includes damage to instrumentalities of transportation whether accidental or otherwise.";

(2) amend 49 U.S.C. 1132(a)(2) by striking the words "(A)–(D) or (F)"; and

(3) amend 49 U.S.C. 1131(d) by striking "1134(b)(2)" and inserting in lieu thereof "1134 (a), (b), (d), and (f)."

The accompanying Statement of Justification for these changes states that NTSB has, through precedent and international convention, traditionally undertaken thorough investigation of all downed or destroyed commercial aircraft within U.S. jurisdiction and that its obligations under international agreement anticipate that it would continue to do so. NTSB further states that these amendments "would not affect the authorities of any other federal agency" under 49 U.S.C. § 1131(a)(3) and merely clarify existing NTSB authority. The FBI believes that NTSB understates the effect of these amendments and that the amendments, in fact, would dramatically alter the nature of interagency relationships in non-accidental transportation investigations. The overall effect of these amendments would be to afford the NTSB lead agency status in all investigations of any incident, accidental or intentional, that includes "damage to instrumentalities of transportation" with the exclusive legal authority to control all aspects of relating to the custody, handling and testing of evidence, including criminal law enforcement investigations.

Existing Federal law gives the NTSB has authority to investigate various transportation accidents and Civil aviation accidents and provides that such accident investigations (except for major marine casualties in which they have concurrent jurisdiction with the U.S. Coast Guard)[1] shall have priority over investigations by other departments or agencies. The legislative history of the investigations priority clause of 49 U.S.C. § 1131(a)(2), which is alluded to in NTSB's Justification Statement, was designed to give NTSB priority over other Federal agencies in conducting accident investigations and was requested by the NTSB "to reduce duplicate Federal accident investigations." H.R. Rep. 108 (I) , 97th Cong., 1st Sess. 1981, *reprinted in* 1981 U.S. Code Cong. and Ad. News 1729 (emphasis added). The Congress believed it was "desirable to have one Federal agency responsible for coordinating accident investigations." The amendments were not intended to prevent the Department of Transportation's operating administrations, such as the Federal Railway Administration, from conducting concurrent investigations required by their statutory responsibilities or from taking necessary regulatory or enforcement actions. H.R. Rep. No. 108 (II), 97th Cong., 1st Sess. 1981 *reprinted at* 1981 U.S. Code Cong. and Ad. News 1734.

NTSB is obliged pursuant to conventions of the International Civil Aviation Organization to investigate not only civil aviation accidents but, also, occurrences resulting in damage to aircraft. This treaty obligation is broad enough to afford NTSB, exercising its obligations to address issues of aviation safety, a role in criminal investigations of aviation incidents that are the result of intentional criminal acts, such as a bombing or sabotage. Congress, however, has never given NTSB's investigations of such incidents or occurrences priority or assigned the NTSB, a safety agency, lead agency status over criminal law enforcement investigations of intentional criminal acts resulting in damage to or the destruction of aircraft.[2] The

---

[1] It should be noted that the proposed amendments would also eliminate the Coast Guard's concurrent jurisdiction in major marine casualty investigations.

[2] In fact, the family assistance amendments enacted by congress in 1996 supports this view. 49 U.S.C. § 1136(h), for purposes of the family assistance authority conferred on NTSB, specifi-

amendments proposed by NTSB would do just that and more by extending NTSB primacy and control over wreckage evidence to all criminal investigations of acts that result in damage to any instrumentalities of transportation, not just aviation, including intentional actions such as a terrorist incident using a bomb or a missile.

NTSB cites the TWA Flight 800 investigation with parallel FBI criminal and NTSB safety investigations as the exemplifying the need for the accident scene priority investigations. However, an agreement, dated September 19, 1973, between the FBI and the NTSB and the FBI regarding Aircraft Accident Investigations, NTSB, after noting the FBI's criminal investigative jurisdiction, states "Whenever the FBI preliminary investigation results in a determination that a criminal investigation is required, such investigation will be conducted concurrently and in coordination with the NTSB investigation." The 1973 agreement also provides for FBI participation, including assignment to NTSB investigative groups of FBI personnel, in NTSB aircraft accident investigations, which participation is in addition to separate investigative activities conducted by the FBI concurrent with the NTSB investigation. The agreement also contemplates a complete and expeditious exchange of information. The FBI submits that the TWA investigation was carried out in conformity with the existing agreement and that the manner in which the FBI conducted the TWA criminal investigation does not provide a basis for such a dramatic alteration of the FBI/NTSB relationship in non- accidental investigations.

By broadly defining the term accident as it relates to NTSB investigative authority, the amendments will encroach on the authority of the Attorney General, through the FBI, to lead and conduct criminal law enforcement investigations, particularly in those cases in which the damage to instrumentalities of transportation results from intentional criminal conduct, in part by ceding to NTSB complete authority over the handling and testing of wreckage evidence. The FBI is opposed to the amendments.

---

cally defined the term aircraft accident to mean any aviation disaster regardless of its cause or suspected cause. If Congress had understood the term accident in the NTSB statutes to include all incidents, including intentional criminal acts, if would not have been necessary to enact subsection (h).

Summary of Attached Documents

1. The first one is the report of the ATF Certified Fire Investigators dated January 1997. It cites the center fuel tank as the origin of the explosion. It was the first federal law enforcement statement that said mechanical failure was responsible for the downing of TWA 800. NTSB agreed with these conclusions.

2. The second document contains the contemporaneous notes taken by Mr. Andrew Vita. He is the Assistant Director for Field Operations at the ATF. The notes are important because they document that the FBI initially refused to accept the report and forbade the ATF from delivering it to NTSB. These notes show ATF's concerns for public safety.

3. The third document is the unsigned letter from Mr. Kallstrom to the chairman of the NTSB condemning the ATF report as "unsolicited and premature." It's not confirmed that this letter was sent. But even if it was, the condemnation contributed to the delay in NTSB making public safety recommendations.

4. The fourth document is an FBI teletype from Mr. Kallstrom to the FBI Director. It cites the report as unsolicited and premature. It asks the FBI Director to condemn the report to ATF officials.

5. The fifth document is a CIA report to Mr. Kallstrom dated March 1997. It concludes there is no evidence that a missile was deployed.

6. The sixth document is the safety recommendation of the NTSB to the FAA dated December 13, 1996, concerning the fuel tanks of similar airplanes.

7. The seventh document is an FBI report dated December 15, 1996, criticizing the safety recommendations of NTSB, as "premature and ill-timed."

8. The eighth document contains the memos of Mr. Tobin, former Chief Metallurgist for the FBI. He criticizes the scientific methodology of the FBI, including the handling of evidence and disregard for scientific analysis of the evidence. These memos start in April of 1995 and conclude in August of 1997.

9. The ninth document includes the contemporaneous notes of Mr. Hughes, a senior accident investigator for NTSB. He cites evidence collection violations and unprofessional treatment of fellow law enforcement officials.

10. The tenth and final document is a copy of the U.S. code, which states the authority of the NTSB as the lead agency in investigating transportation accidents.

Source: Senate Judiciary Subcommittee on Administrative Oversight and the Courts
Senator Charles E. Grassley, Chairman

DEPARTMENT OF THE TREASURY
BUREAU OF ALCOHOL, TOBACCO AND FIREARMS

1.

OFFICE OF CRIMINAL ENFORCEMENT

STATEMENT OF ATF CERTIFIED FIRE INVESTIGATOR

To: **CHIEF, ARSON AND EXPLOSIVES DIVISION**
WASHINGTON, D.C.

UN: 63122 96 0060 Z

Date: January 20, 1997

SYNOPSIS:
On July 17, 1996, at approximately 8:30 PM TWA flight 800, a Boeing 747-100 bearing tail number N93119, crashed into the ocean south of Long Island, New York resulting in 230 fatalities. The aircraft had departed JFK airport at approximately 8:19 PM bound for Paris, France. Investigation shows that departure had been delayed for over one hour, and, that due to a relatively light passenger/cargo load, there was no need to fill the center fuel tank. This fuel tank had been last filled in Athens, Greece. During the Atlantic crossing most of the fuel had been used and the center tank was estimated to contain 50 to 80 gallons of Jet-A fuel. Investigation shows that the center fuel tank failed as the result of a fuel/air explosion. This event occurred at an altitude of approximately 13,800 feet. The air speed of TWA 800 at the time was approximately 400 miles per hour. This explosion caused structural failures of parts of the aircraft which compromised its air worthiness.
(Exhibits 1, 2)

WITNESS OBSERVATIONS:
Witnesses reported seeing explosions accompanied by fire. Some witnesses indicated that they observed an initial explosion/fire event which was followed by a second and larger explosion/fire event which illuminated the sky. A part of the fire event was intermittently present from the sky to the ocean surface and continued to propagate on the ocean surface.

Investigation conducted by the FBI has revealed a quantity of witnesses who observed a streak of light going up into the sky just prior to the initial explosion/fire event. The witnesses indicated that the streak was observed for approximately 4 to 8 seconds prior to the initial explosion/fire event. The FBI has given briefings to ATF indicating that they feel 36 of the witnesses are credible. Two of the most detailed witnesses made their observations from different locations. One witness was in Bellport, Long Island

while the other was at Shinnecock, Long Island. These observations have led to a potential theory involving a shoulder fired surface to air missile of the "Stinger" variety striking the aircraft. (Exhibits 1, 3)

The flight data recorders concluded operations abruptly and did not record any information indicative of an identifiable flight problem. The altimeters are equipped with a red flag device which activates if the altimeters are without power for 2 seconds. The red flags did not drop indicating that all power was interrupted in less than 2 seconds.

STRUCTURAL CONFIGURATION:
In general a Boeing 747-100 is approximately 230 feet long with a wing span of approximately 195 feet. The aircraft is equipped with four engines and can carry approximately 430 passengers plus cargo. Available information indicates this particular aircraft was put into service during October of 1971. (Exhibit 2)

The center fuel tank is located between the wings in the center of the fuselage. This tank is approximately 21 feet from port to starboard and 20 feet from front to rear with a bowed ceiling which peaks near the front of the tank in the vicinity of span wise beam wall #3 and decreases in height from approximately 6'- 6" at the span wise beam #3 wall to approximately 4 feet at the rear spar wall. The tank is divided by four interior walls which run across the tank from the starboard side to the port side. These walls divide the tank into five separate cells. (Exhibits 2, 4)

The forward most cell, which is a dry cell, begins at the front spar wall at approximately station point 1000. The rear of this cell is formed by span wise beam #3 wall located at approximately station point 1042. This cell measures approximately 21' x 3'-6" and is approximately 6'- 5" in height. (Exhibits 2, 5, 6)

The next cell toward the rear begins at span wise beam #3 wall located at approximately station point 1042. The rear of the cell is formed by span wise beam wall #2 located at approximately station point 1097. This cell is designed to contain fuel and measures approximately 21' x 4'-6" and is approximately 6'- 6" in height. This

cell is equipped with three dielectric probes which measure fuel quantity. (Exhibits 5, 6)

The next cell toward the rear begins at span wise beam #2 wall located at approximately station point 1097. The rear of the cell wall is formed by the mid spar wall located at approximately station point 1141. This cell is also designed to contain fuel and is linked to the cells forward and aft of it by scupper like openings in the bottom corners of each of its cell walls. This cell measures approximately 21' x 3'-8" and is approximately 5'- 6" in height. This cell is equipped with one dielectric fuel probe. The scavenge pump pick-up is located at the port side of center in this cell closer to span wise beam #2 wall. (Exhibits 2, 5, 6)

The next cell toward the rear begins at mid spar wall at approximately station point 1141. The rear of the cell is formed by span wise beam #1 wall located at approximately station point 1175. This cell is designed to contain fuel and is also linked to the cells forward and aft of it by scupper like openings in the bottom corners of each of its cell walls. This cell is the narrowest cell. The cell measures approximately 21' x 3' and is slightly less than 5 feet in height. This cell is divided in half by a center bulk head like wall. This cell is equipped with one dielectric fuel probe located in the starboard section of the divided cell. (Exhibits 2, 5, 6)

The last cell toward the rear begins at span wise beam #1 wall at approximately station point 1175. The rear of the cell is formed by the rear spar wall which also forms the rear wall of the tank. This cell is designed to contain fuel and is linked to the cells in front by scupper like openings in the bottom corners of the span wise beam #1 wall. The rear spar wall is located at approximately station point 1241. This cell is the widest cell. The rear cell measures approximately 21' x 5'-6" and is approximately 4 feet in height. This cell is divided in half by a center bulk head like wall. This cell is equipped with two dielectric fuel probes located on the port section of the divided cell. The cross feed fuel lines for transferring fuel from wing to wing have been positioned inside of this cell against the rear spar wall in the actual reconstruction by Boeing engineers. The three fuel pumps are mounted in the rear spar wall. The wiring for the fuel gauge probes enters the tank through the rear spar wall. (Exhibits 2, 5, 6)

The span wise beam walls and mid spar wall are equipped with access ports some of which are filled with a honeycomb material. All of the access ports are covered with aluminum plates. The tank is vented by way of vent stringers which enter from the upper skin of the wings on both sides of the tank. The vents run across the interior ceiling of the tank to provide a cross vent configuration which allows venting from the port side of the tank to the starboard wing and vice versa. (Exhibits 5, 6)

The front spar, mid spar and rear spar walls of the tank connect with the front spar, mid spar and rear spar structural support members of the wings. Therefore, the wing box, or center fuel tank, serves as a structural member which ties the wings to the fuselage and serves to tie the wings together. The upper skin of each wing attaches at the ceiling of the tank and the lower skin of each wing attaches at the floor of the tank. (Exhibit 4)

The sides of the fuel tank are formed by aluminum walls of increasing thicknesses toward the rear which are referred to as side of body wall. These walls separate the center fuel tank from the wing tanks. The floor of the tank is bolted to the keel beam which runs longitudinally under the center line of the center fuel tank. (Exhibits 5, 6)

The heat exchange equipment for the aircraft is mounted on the starboard and port side of the keel beam underneath the center fuel tank. The equipment consists of three heat exchange units connected by cylindrical tubing approximately 9" in diameter. Two units are mounted on the port side of the keel and one unit is mounted on the starboard side of the keel. These heat exchangers use hot air routed to them from the engines. The duct work from this system begins at the rear of the center tank, ascends the rear spar wall and goes forward above the ceiling of the center fuel tank and then branches off via six risers. Three risers go to each side of the plane and ascend the fuselage wall to service the air exchange system of the aircraft cabin. (Exhibit 8)

Placed on the roof of the tank are a series of aluminum floor beams which run longitudinally. These beams support the cabin floor which is made of a composite fiberglass and foam. The passenger seats are attached to

this floor. Row 21 is located approximately above the front spar wall of the center fuel tank and row 27 is located approximately above the rear spar wall of the center fuel tank. (Exhibits 2, 5, 6)

The seating arrangement consists of ten seats to a row. Starting at the port side of the aircraft the seats are designated 1, 2 and 3, an aisle separates these seats from the center seats of the row which are designated as seats 4, 5, 6 and 7, at this point the second aisle is located and then the starboard most seats which are designated 8, 9 and 0. Seats numbered 1 and 0 are window seats while seats numbered 3, 4, 7 and 8 are aisle seats. (Exhibit 2, 5)

Located to the rear of the center fuel tank is the main landing gear. Forward of the center fuel tank is the forward cargo hold.

SCENE EXAMINATION:
The Atlantic Ocean debris recovery area was divided into three color coded zones. The green zone was the area furthest from JFK airport and contained most of the aircraft from the wings to the tail. The red zone was located closest to JFK airport with the yellow zone as a small part of the red zone and located near the juncture of the red and green zones. The yellow zone contained most of the forward part of the aircraft including the cockpit. Pieces of the aircraft were tagged with color coded tags upon recovery designating the zones in which the pieces were found. A record was maintained indicating the longitude and latitude of recovered pieces within the color coded zones. (Exhibit 9)

An examination of major structural components reveals that the keel beam failed and broke apart at approximately station point 1140. This is almost directly below the mid spar wall of the center fuel tank. The recovered portion of the keel beam forward of this break point is clean and is not fire damaged. The portion of the keel beam aft of the break point is heavily smoke stained and fire damaged. Since the fuel/air explosion in the center fuel tank would cause a resultant fire, it is concluded that the forward portion of the keel broke away from the aircraft in conjunction with the occurrence of the fuel/air explosion. An examination of the bolts which secure the bottom of the

center fuel tank to the keel beam show that the keel beam levered away from the aircraft toward the underside of the aircraft. This would contribute to the separation of the front of the aircraft from the wings and rear of the aircraft. (Exhibit 2, 5)

An examination of the right wing shows that it remained attached to the fuselage and actually had to be mechanically cut off during recovery and transport operations. This wing shows smoke and fire damage indicating that it was attached during the subsequent fires. Some recovered pieces of fuselage in close proximity to the right wing do not show as severe fire damage as other integral pieces. This tends to indicate that some of the fire damage observed to the right wing and fuselage occurred in fires on the ocean surface after impact with the ocean. The ocean impact would have sheared off certain pieces of fuselage which would have sunk and no longer been exposed to fire. Other parts which were attached to more buoyant sections, such as the fuel tanks of the right wing, would have remained on the surface for a period of time and would have been exposed to the ocean surface fire.

One part of the juncture of the right wing with the wing box shows evidence of failure. This break is identifiable on the lower skin of the right wing in the vicinity of station point 1065 and the location of the forward most wet fuel cell between span wise beam #2 wall and span wise beam #3 wall. This failure, along with parts of the starboard side of body wall, would theoretically allow a flow of fuel from the right wing tank into this area and provide a fuel source for an already present fire. The walls designated as span wise beam #2 and #3 show significant fire and heat damage in this area. (Exhibit 2, 5, 6)

The juncture point of the left wing and fuselage shows evidence of tearing away from the aircraft. The upper skin of the left wing at the point it attaches to the wing box was clean and lacked any evidence of fire damage or smoke staining. This lack of fire damage tends to indicate that the left wing separated from the aircraft at the time of the fuel/air explosion in the center tank and was not exposed to the resultant fire.

The heat exchange equipment located below the center fuel tank does not show evidence of fire damage or smoke

staining. This lack of fire exposure damage tends to indicate that the heat exchange equipment departed the aircraft at the time of the fuel/air explosion and was not exposed to the resultant fire. The lateral support rib located at the rear of the keel shows fire exposure damage on the right (starboard) side only. Fire patterns indicate this damage is from a fire lapping out of the center fuel tank and being blown back under the tank on the starboard side of the keel. This pattern supports the deduction that the heat exchange equipment on the starboard side of the keel was not present in its original location during the fire event. (Exhibits 5, 8)

The front spar wall shows blast damage patterns which are typical of fuel/air pressures contacting the wall from the rear. The front spar wall also shows a relatively uniform line of mechanical damage approximately one to one and a half feet down from the top of the wall. This mechanical damage is consistent with the blast pressure coming from the rear of span wise beam #3 wall and levering span wise beam #3 wall into the front spar wall causing the line of mechanical damage. The front spar wall shows no evidence of fire damage indicating that it separated from the aircraft at the time of the fuel/air explosion and was not exposed to the resultant fire. The center and port side section of the front spar wall were recovered closest to JFK airport in the red debris field. (Exhibits 5, 6, 7, 9)

The center section and port side section of span wise beam #3 wall does not show evidence of fire damage or smoke staining. This lack of fire exposure damage tends to indicate that these sections of span wise beam #3 wall separated from the aircraft at the time of the fuel/air explosion. These pieces of span wise beam #3 wall were among the next closest recovered pieces of the aircraft to JFK airport in the red debris field. (Exhibits 5, 6, 7, 9)

An examination of span wise beam #2 wall shows blast damage patterns typical of fuel/air pressures impacting the wall from the rear. An aluminum access port cover in this wall shows clearly that it was subject to blast pressures coming from the rear. This access port cover does not show evidence of being exposed to a fire environment which indicates that it separated from the aircraft at the time of the fuel/air explosion and was

not exposed to the resultant fire. The access port cover was recovered from the red debris field. (Exhibits 5, 6, 7, 9)

The next wall toward the rear is the mid spar wall. This wall exhibits blast damage patterns typical of fuel/air pressures impacting the wall from the rear. The fuel cell formed by the mid spar wall and, to the rear, span wise beam #1 wall is divided into two sections by a center wall. The center wall shows blast damage patterns typical of fuel/air pressures impacting it from the starboard side of the aircraft. Span wise beam #1 wall shows blast damage patterns indicative of pressures impacting the wall from the front. One piece of span wise beam #1 wall which displays blast pressure damage coming from the front was recovered in the red debris field. (Exhibits 5, 6, 7, 9)

The rear spar wall forms the back of the center fuel tank and shows blast damage patterns typical of fuel/air pressures coming from the front. The port and starboard sections of this wall do not show evidence of being exposed to a fire indicating these sections were separated from the tank and pushed back into the landing gear area away from the fire event. The center section of the rear spar wall exhibits significant burn damage indicating it remained in place after the fuel/air explosion and was exposed to the resultant fire. (Exhibits 5, 6, 7)

An examination of the blast pressure signatures on the center fuel tank walls indicates that the most likely area of initiation of the fuel/air explosion was the starboard side of the second cell from the rear between station points 1175, which is the approximate location of span wise beam #1 wall, and station point 1141 which is the approximate location of the mid spar wall. (Exhibits 2, 5, 6)

FIRE SCENARIO:
An examination of the fire patterns indicates that a fire on the port side of the fuel tank in the vicinity of the second cell from the rear vented the roof of the tank approximately between station points 1175 and 1141. The tank roof shows a failure on the port side of this cell. The edges of the failure exhibit melting of the aluminum in this area.

The aluminum floor beams attached to the roof of the tank exhibit a fire progression pattern from the previously described venting point across the roof of the center fuel tank toward the starboard side of the aircraft. (Exhibits 2, 5, 6)

The patterns show that the fire reached the starboard side of the fuselage and progressed upward between the interior cabin wall and the outer fuselage. The three fiberglass risers which are part of the air exchange system on the starboard side of the aircraft show significant fire damage. These risers are located between the interior cabin wall and the outer fuselage. The risers exhibit some protected areas where they were affixed to the fuselage indicating that they were exposed to fire while in place. In contrast the three risers which serve the port side of the aircraft do not exhibit any fire damage. An examination of the vent stringer which proceeds from the port side of the center fuel tank to the starboard wing shows heavy smoke staining. In contrast the available parts of the vent stringer which proceeds from the starboard side of the center fuel tank to the port wing shows minimal staining. This pattern tends to support a scenario which would separate the left wing from the aircraft at the time of the fuel/air explosion in the center tank. (Exhibits 5, 6)

A second area of significant fire damage is located on the starboard side of the tank in the vicinity of station point 1065 between span wise beam #2 wall and span wise beam #3 wall. This area of fire could have been fueled by the noted failure in the lower skin of the right wing causing an introduction of fuel from the right wing tank. The metal in this area shows unique stretching which could be the result of mechanical pressure being applied to heat softened metal. The starboard section of span wise beam #2 wall shows accordion like damage which would be indicative of mechanical pressure being applied to metal which had been heat degraded. A fire in this area could vent toward the front due to missing sections of the walls forward of this position. This fire could then be forced back by wind pressures and cause some of the observed fire damage to the starboard side of the remaining section of the keel beam. (Exhibits 5, 6)

ANALYSIS:
Assessing the explosion potential of the center fuel tank can be accomplished by viewing it as a system with passive elements, active elements and a surrounding environment.

The passive elements are the parts of the system which do not supply energy to the system, but serve to confine the potentially explosive material (the jet fuel vapors). The passive elements would be the aluminum walls, roof and floor of the center fuel tank.

The active elements are the parts of the system which can supply heat energy to the fuel in the system. This would include the wiring for the fuel probes, the probes themselves, the three fuel pumps and potential electrostatic discharges from fuel moving under pressure in the cross feed lines. Investigation indicates a fuel cross feed was initiated approximately four minutes prior to the incident. Investigation also shows that the cockpit indicator light for the scavenge fuel pump indicates that it was off.

The environment which immediately surrounds the system may also be capable of supplying energy to the system and changing the conditions of the system. This would include the heat exchangers located below the center fuel tank and the effect created by the decrease in atmospheric pressure at an altitude of 13,800 feet.

The center fuel tank is constructed of aluminum with varying thicknesses, depending on the structural requirements of the different components. The thermal conductivity of aluminum is relatively high in comparison to other metals. The thermal conductivity of aluminum is significantly greater than steel, but less than copper. The capacity of the center fuel tank is approximately 12,890 gallons. The tank is vented as previously mentioned which would allow for air movement in the tank.

Information provided by FAA indicates that a test of a sample of the fuel used to fill the center fuel tank in Athens showed that the fuel had a flash point of 113 degrees fahrenheit at atmospheric pressure. Literature regarding the upper and lower flammable limits of Jet A vapor when mixed with air indicates a lower limit of .6% and an upper limit of 4.9%. The autoignition temperature of the fuel would be in the vicinity of 450 degrees

fahrenheit at atmospheric pressure. These fuel characteristics would change as the aircraft climbed and atmospheric pressure decreased. Information provided by NTSB and independent research indicated that the flash point could decrease to the vicinity of 95 degrees fahrenheit at an altitude of 13,800 feet. Available information indicates that the autoignition temperature of the fuel would not be significantly affected by the altitude. In addition, an examination of the geometry of the tank indicates that its surface area to volume ratio would not cause a decrease in autoignition temperature.

Information obtained regarding the function of the heat exchange units located under the center fuel tank indicates that their operation could raise the ambient temperature in the system by 50 degrees fahrenheit. Tests conducted by Boeing showed that in a simulation of TWA 800's ground activity and initial climb pattern a temperature of 115 degrees fahrenheit was recorded in the center fuel tank. In addition, investigation has detected the possibility of a failed weld in the heat exchange tubing carrying bleed air from the engines. Interviews with representatives of Hamilton Standard indicate that the bleed air from the engines of the aircraft enter the heat exchange tubing at temperatures of 350 to 390 degrees fahrenheit. This could permit a hot air escape in the 350 to 390 degrees fahrenheit temperature range. The combination of events indicates that the remaining fuel in the center fuel tank could be easily raised to a temperature at which it would be vaporizing at a sufficient rate to allow ignition of the vapors by a piloted flame or spark. In addition, as the temperature of the vapor increases the earlier mentioned flammable limits become wider.

Research regarding the environmental conditions inside the center fuel tank shows not only that a potential explosive atmosphere exists, but due to the increased temperature caused by the combined effects, and the potential for fuel sloshing due to take off and climb possibly creating a fuel "mist", the fuel/air mixture would become increasing fragile. This would allow ignition of the mixture by a very low energy spark. Once ignited, due to the configuration of the tank with the dividing cell walls and the various access ports, a turbulent mixing of the fuel/air mixture would occur. This turbulent mixing would result in a "wrinkled" flame front causing more surface exposure and hence more

involvement of fuel which would increase the intensity of the explosion.

Available literature indicates that fuel air explosions can generate pressures in the area of six to eight times the ambient pressure. The literature also indicates that if the container permits turbulent mixing along with pre-heating and pressurizing of the unburned fuel vapor, resultant pressures of ten to twenty times ambient pressure can be achieved. TWA 800 was at an altitude of approximately 13,800 feet. The atmospheric pressure at 13,800 feet would be approximately 8 pounds per square inch. Therefore, the low end pressures of a fuel/air explosion could be in the vicinity of 48 pounds per square inch while the high end pressures could be from 80 to 160 pounds per square inch. Boeing has indicated that the center fuel tank is designed to withstand pressures of 20 pounds per square inch and they believe the tank could possibly withstand 60 pounds per square inch. In any event, the irrefutable fact exists that the tank did fail with the signature of a fuel/air explosion.

DAMAGE RESOLUTION:
Examination of a theory which is based upon a fuel/air explosion initiating in the right side of the second cell from the rear of the center fuel tank reveals the following:

1. Takeoff and climb data indicates the aircraft was still in a climb at approximately a 7 degree angle of attack. This would result in a gravity fuel flow of the remaining fuel toward the rear cells of the center tank.

2. Identifiable blast patterns in cell walls and the center dividing bulk head wall show pressure and damage emanating from the right side of the second cell from the rear.

3. The left side of body wall shows more severe damage than the right side of body wall which would be typical of a fuel/air explosion building in intensity from the right side.

4. The recovery of integral pieces of the tank walls, including portions of the front spar wall and SWB #3 wall, in the portion of the red debris field closest to JFK, supports a conclusion that the primary event in this

incident was a fuel/air explosion within the center fuel tank that caused its failure.

5. The cables serving the flight data recorders are attached to the front spar wall. The early and nearly instantaneous failing of the front spar wall would severe the cables serving the flight data recorders and result in a termination of all data.

6. The failure of the keel beam at midspar and its lack of fire damage support the action of increasing pressure forward of the second cell from the rear, and a separation of this structural member prior to the fire event. This keel beam failure, combined with the natural wind forces experienced in flight, would contribute to the separation of the front of aircraft.

7. The unburned condition of the left wing indicates that it probably separated as a result of the fuel/air explosion in the center tank. This explosion would compromise the integrity of the front, mid and rear spar walls which served to tie the wings to the aircraft body.

8. Witness observations of one explosion followed in seconds by another larger explosion would be consistent with the center fuel tank explosion followed by a separate and larger explosion of the left wing away from the body of the aircraft.

9. Observed fire patterns are consistent with a center fuel tank explosion and a resultant fire in this area. Examination of all recovered portions of the aircraft show this was the only area exposed to prolonged fire damage.

10. Research regarding the combined effect of the following factors indicates that an extremely fragile environment would exist in the center fuel tank:

(1) A minimal amount of fuel in the center tank providing a volume for a hazardous fuel/air mixture.

(2) Decreased atmospheric pressure resulting in a lower flash point.

(3) A heated environment due to the operation of the heat exchangers and a possible bleed air leak causing:

Chief, Arson and Explosives Division
January 20, 1997

a. A sufficient fuel vaporization rate.

b. A widening of the flammable limits.

c. A decrease in the required ignition energy.

11. Considering the integral location of the center fuel tank, it is difficult to introduce an external initiating element which could cause a fuel/air explosion in the center fuel tank. The assemblage of ATF personnel who examined the debris were unable to locate identifiable evidence of an external violation of the center fuel tank or the signature typically left by a high explosive detonation.

12. Considering this aircraft had been in service for approximately 25 years and probably experienced similar conditions in the center fuel tank during hundreds of take offs and climbs, the additional possibility of a bleed air leak in the heat exchange system combined with favorable fuel/air ratios could theoretically form the thin chain of events which led to the explosive failure of center fuel tank.

Daniel P. Boeh ATF, CFI	William J. Petraitis ATF, CFI	Luis Velazco ATF, CFI

Chief, Arson and Explosives Division
January 20, 1997

LIST OF EXHIBITS

1. General Area Map
2. Boeing 747-100 Station Point Locations
3. Witness Map
4. Fuel Tank Configurations
5. Blast Direction
6. Center Fuel Tank and Fuel Probe Locations
7. Recovery Location of Center Fuel Tank Pieces
8. Heat Exchange Units
9. Debris Field Map

Current Map

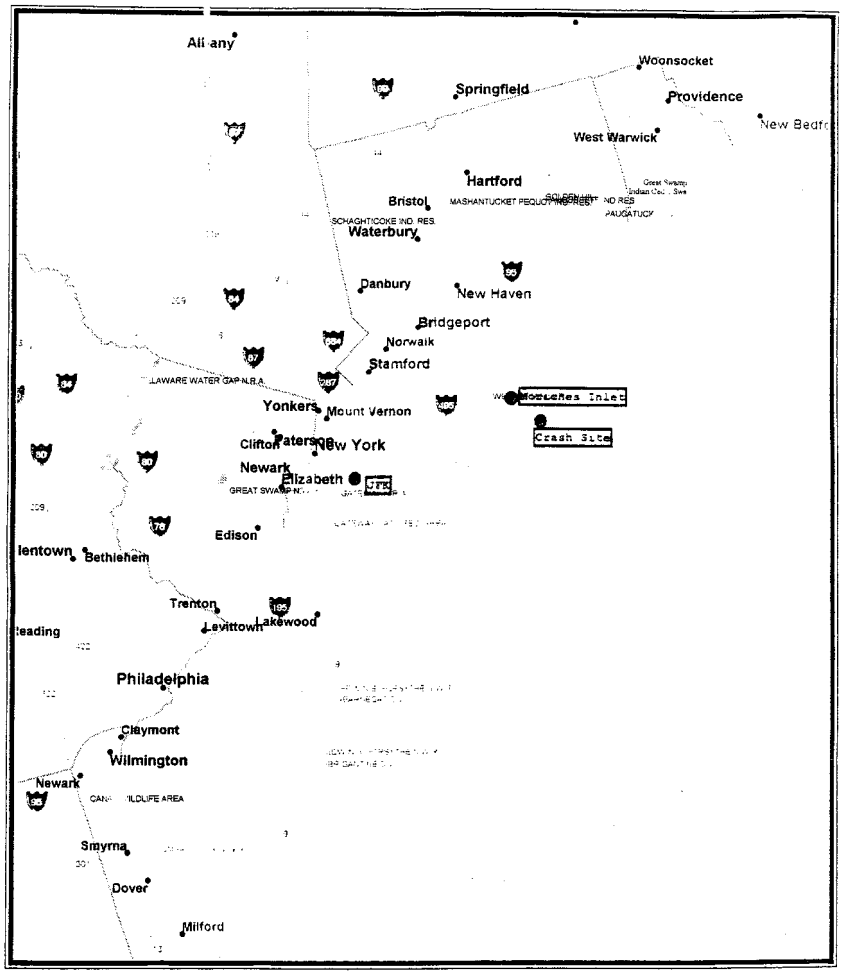
Woonsocket
Springfield
Providence
West Warwick
Hartford
Bristol
Waterbury
Danbury
New Haven
Bridgeport
Norwalk
Stamford
Yonkers
Mount Vernon
Crash Site
Clifton
New York
Newark
Elizabeth
JFK
Edison
Bethlehem
Trenton
Levittown
Lakewood
Philadelphia
Claymont
Wilmington
Newark
Smyrna
Dover
Milford

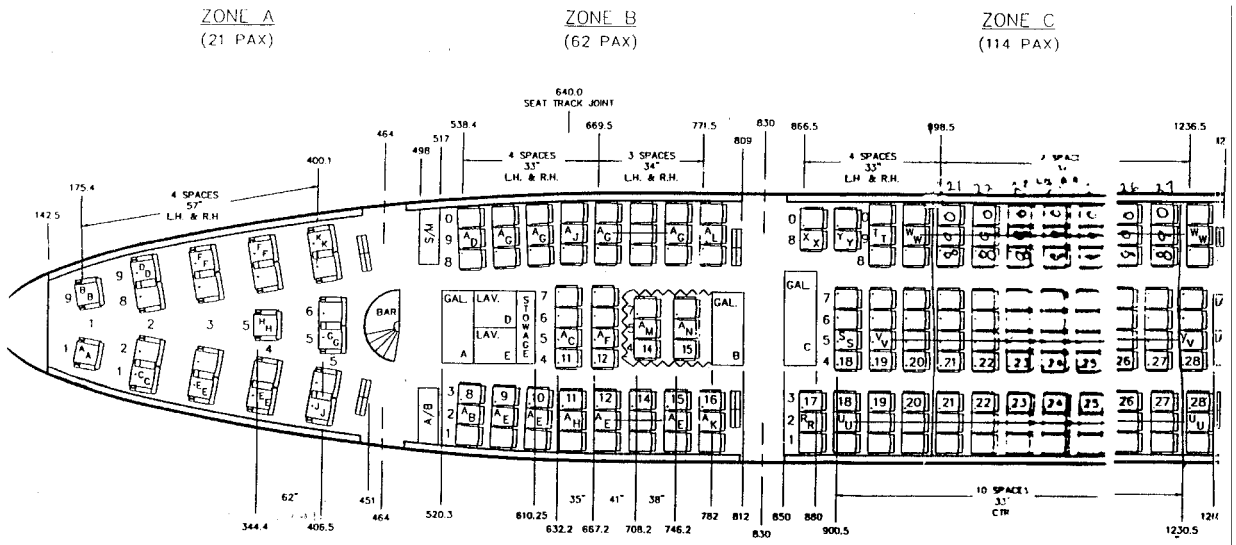

-1 747-100 CONFI

STATION POINT LOC

ZONE "A" FIRST CLASS SEAT PART NUMBERS	UPPER DECK FIRST CLASS SEAT PART NUMBERS	ZONE "B" COMFORT CLASS SEAT PART NUMBERS

ZONE D
(90 PAX)

ZONE E
(138 PAX)

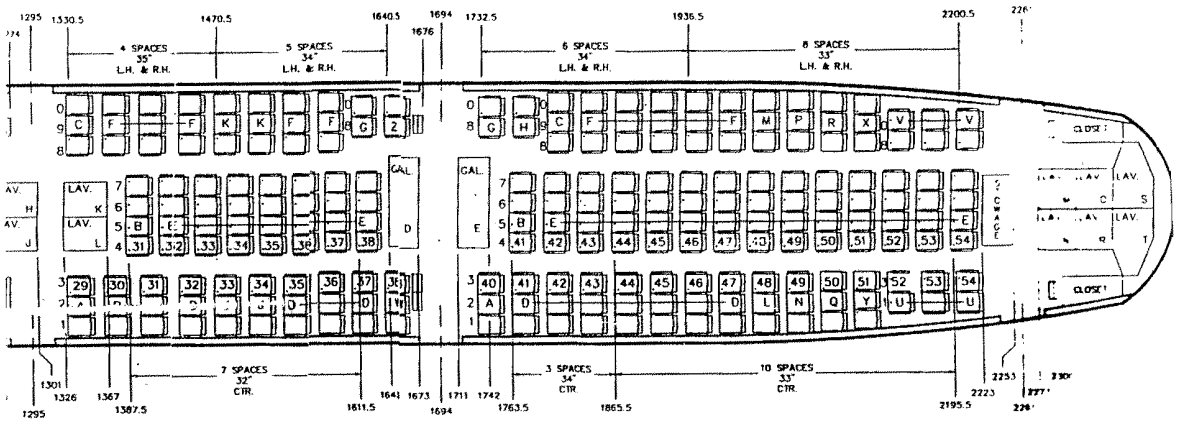

GURATION 29/404

ATIONS

ZONE "C"
COMFORT CLASS
SEAT PART NUMBERS

ZONES "D" & "E"
COMFORT CLASS
SEAT PART NUMBERS

UPPER DECK
(8 PAX)

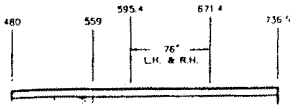

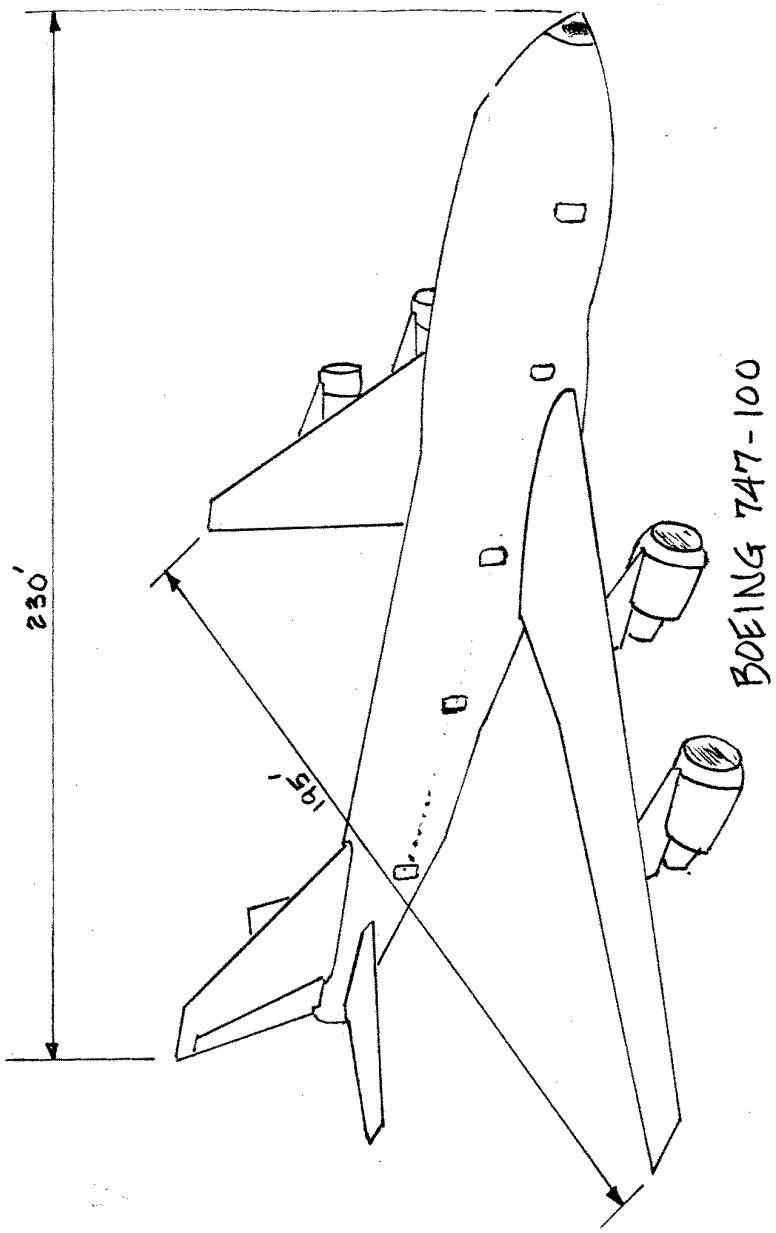
230'
195'
BOEING 747-100

Current Map

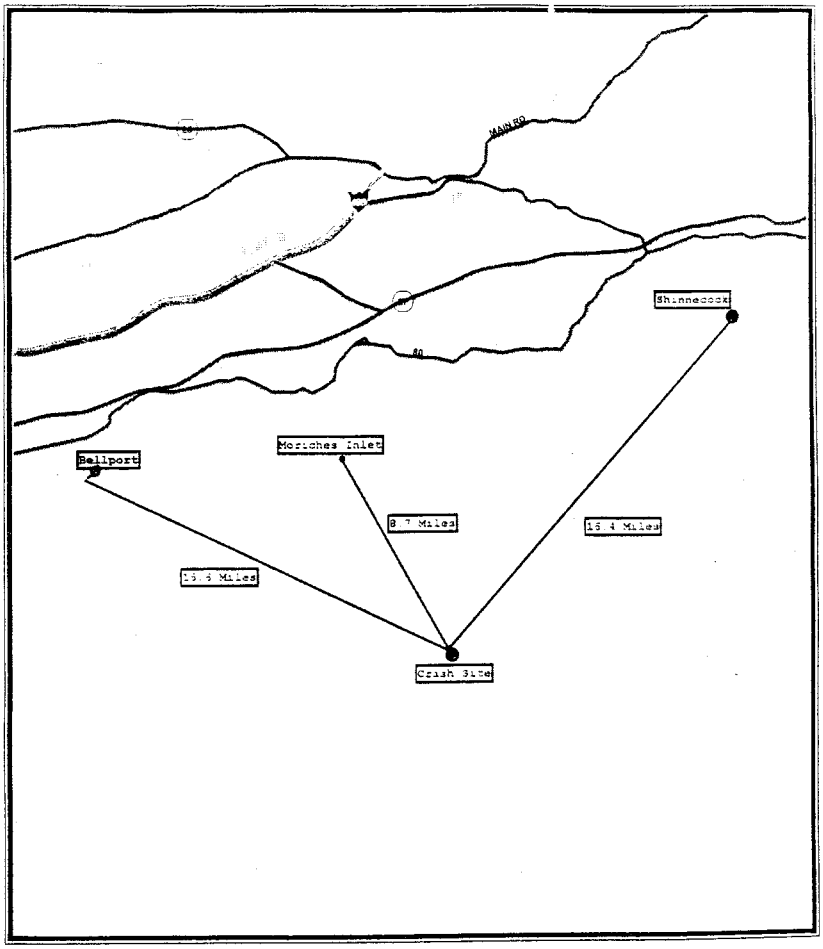

© 1996 by Rand McNally & Company. All rights reserved.

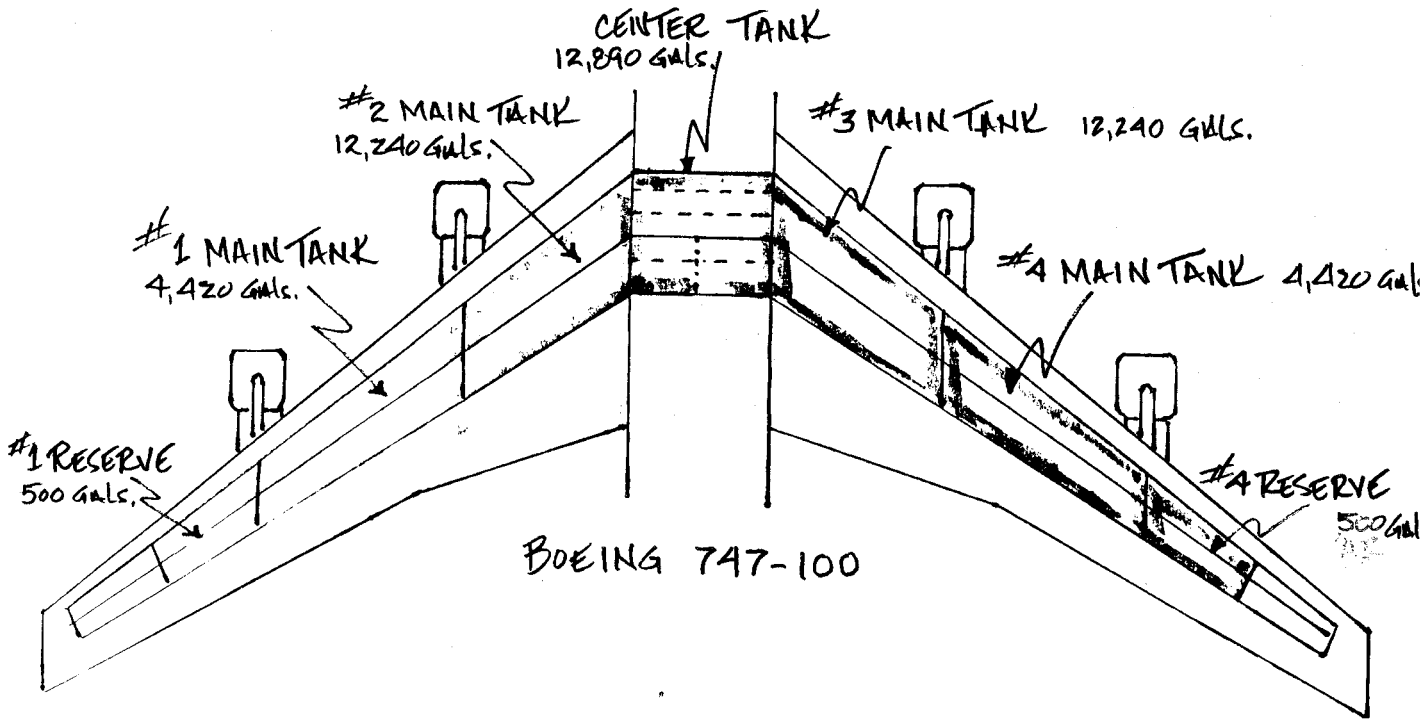
CENTER TANK
12,890 GALS.
#2 MAIN TANK
12,240 GALS.
#3 MAIN TANK 12,240 GALS.
#1 MAIN TANK
4,420 GALS.
#4 MAIN TANK 4,420 GAL
#1 RESERVE
500 GALS.
#4 RESERVE
500 GAL
BOEING 747-100

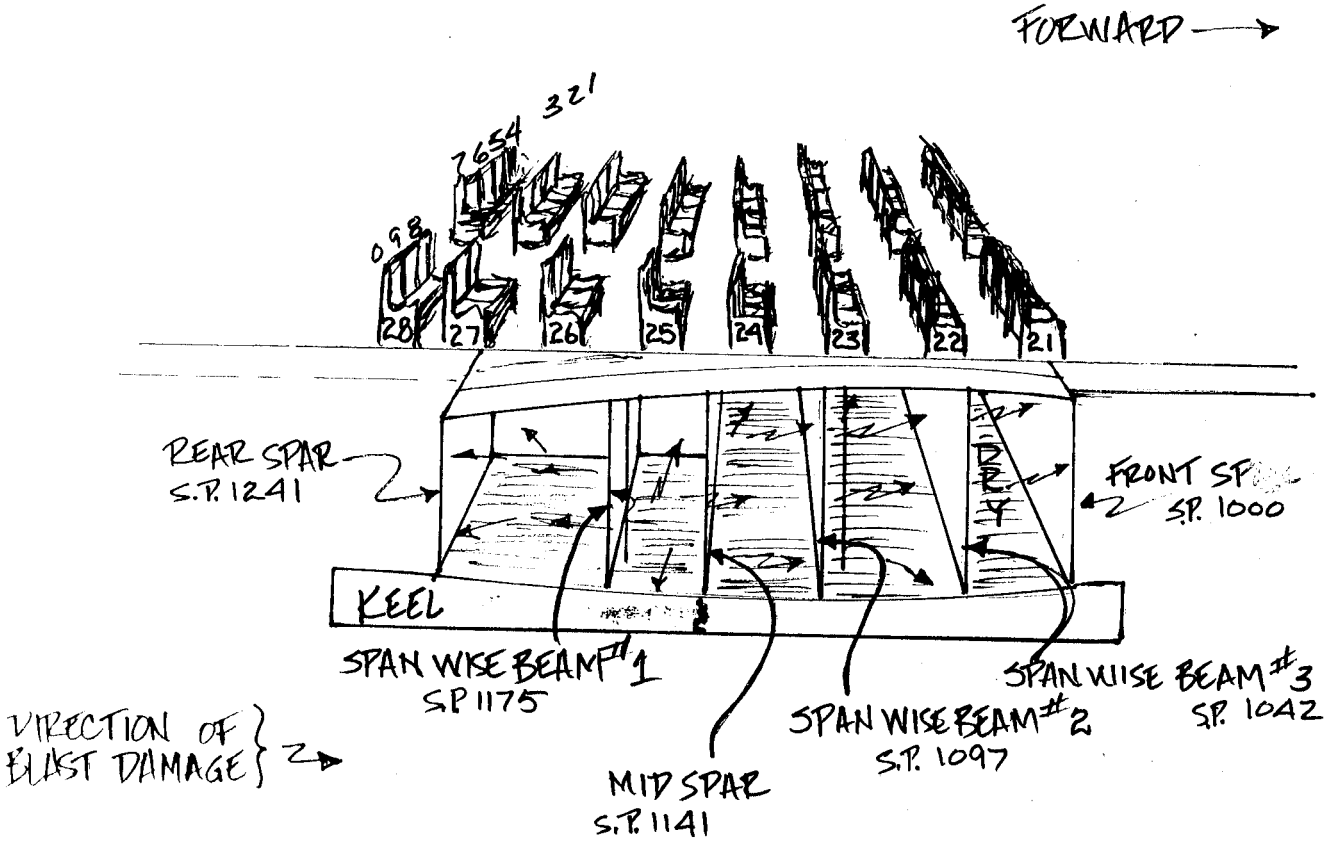
FORWARD
321
7654
098
28
27
26
25
24
23
22
21
REAR SPAR
S.P. 1241
FRONT SPAR
S.P. 1000
DRY
KEEL
SPAN WISE BEAM #1
S.P 1175
SPAN WISE BEAM #2
S.P. 1097
SPAN WISE BEAM #3
S.P. 1042
MID SPAR
S.P. 1141
DIRECTION OF
BLAST DAMAGE

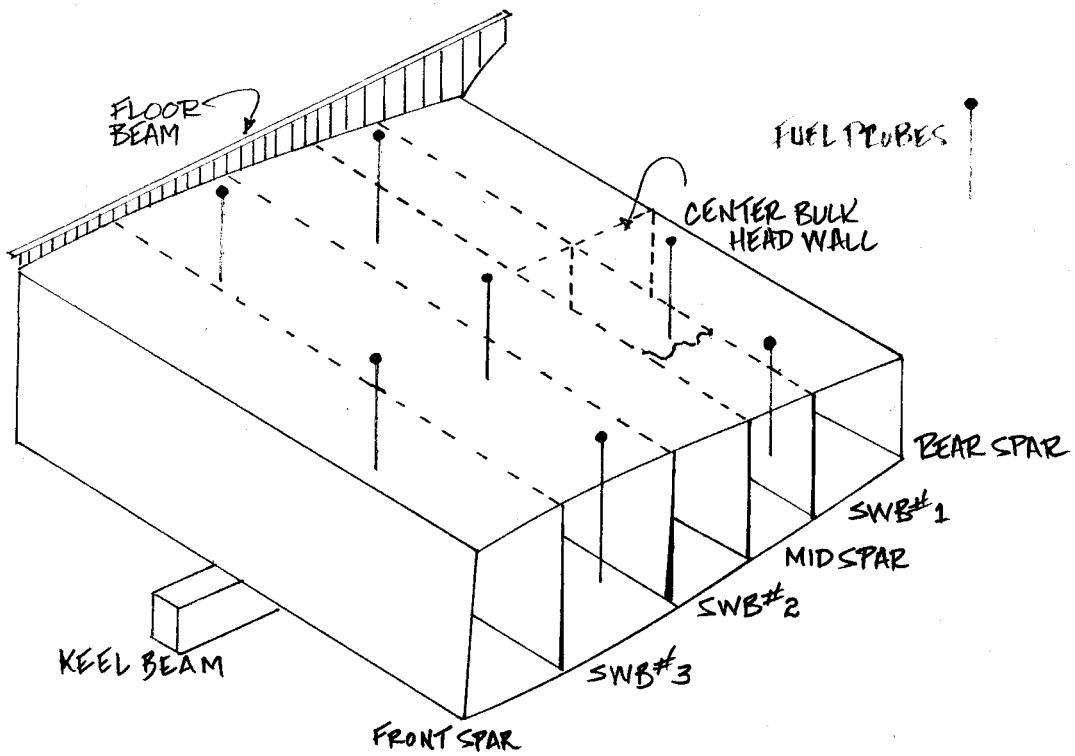

CENTER FUEL TANK

CENTER SECTION WING BOX

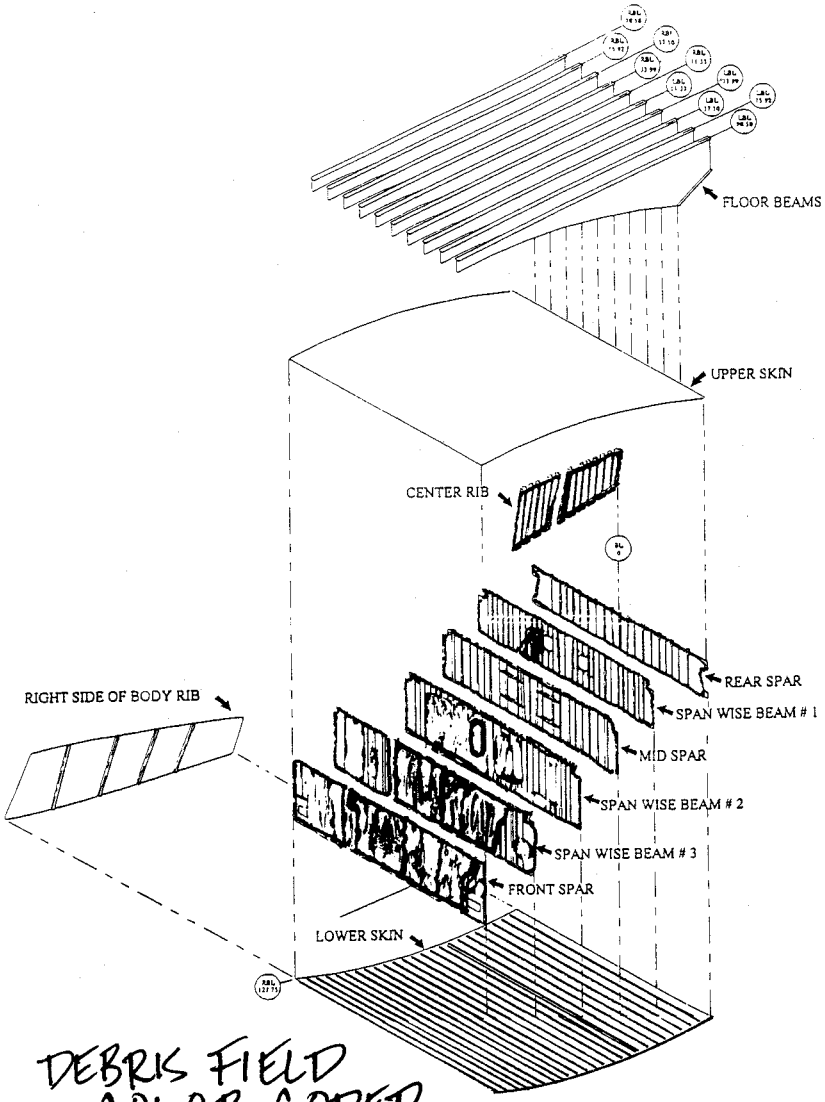

DEBRIS FIELD
COLOR CODED
RECOVERY LOCATIONS OF
CENTER FUEL TANK WALLS

HEAT EXCHANGE UNITS

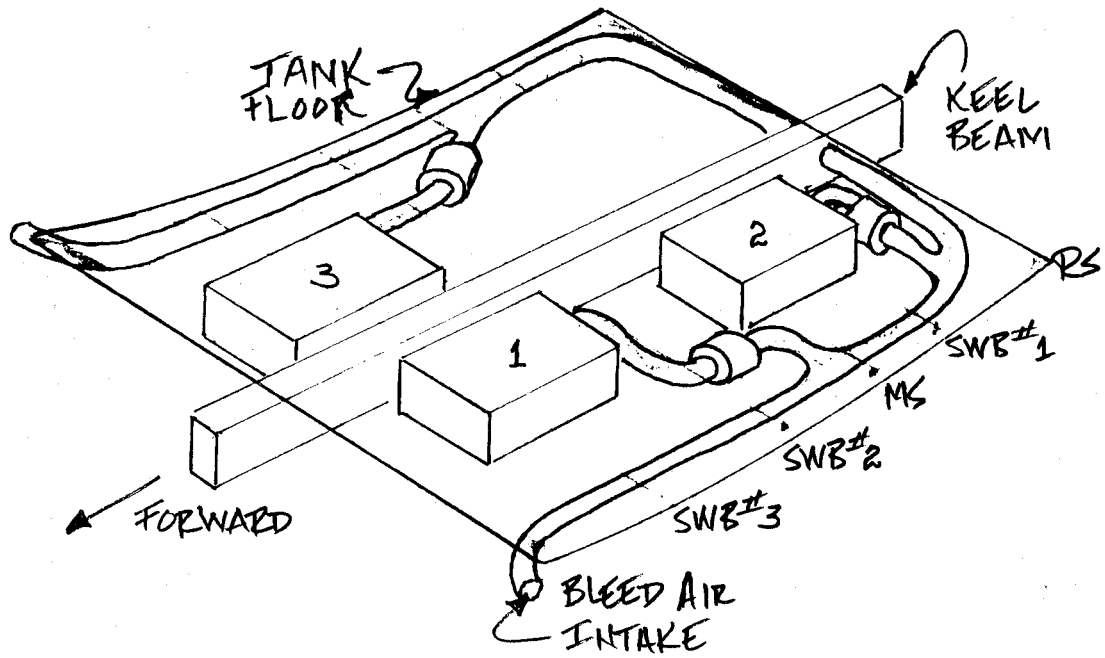

Current Map

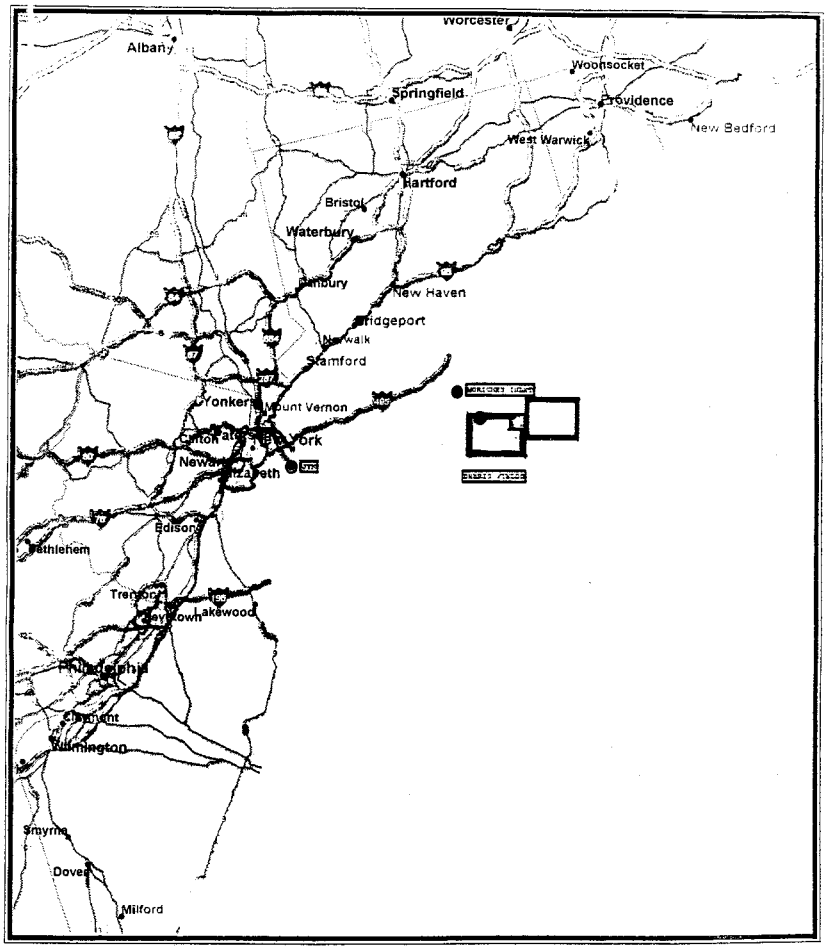

© 1996 by Rand McNally & Company. All rights reserved.

LEADERSHIP

to: _____

Department of the Treasury
Bureau of Alcohol, Tobacco and Firearms

KELLY

date: _____

1. MEMBER OF WHITE HOUSE COMMISSION ON AVIATION SAFETY AND SECURITY

2. WE HAVE WHAT WE BELIEVE, WHETHER RIGHT OR WRONG, EVIDENCE OF ROUTINE DESIGN FLAWS IN BOEING 727 AIRPLANES WHICH, AGAIN WE BELIEVE TO BE RESPONSIBLE FOR THE DOWNING OF TWA FLT 800 — THIS SAME CONFIGURATION EXISTS IN POSSIBLY 100 SIMILAR PLANES IN THE U.S., WHICH COULD RESULT IN ANOTHER SIMILAR AIR DISASTER.

Associate Director
Office of Enforcement
Phone: (202) 927-7970
Fax: (202) 927-7756
Room 8100

— OVER —

AND WE ARE BEING ORDERED
NOT TO RELEASE THAT INFORMATION
TO THE APPROPRIATE AUTHORITIES
FOR NO COMPELLING GOOD REASON
TO RISK HUNDREDS OF HUMAN
LIVES.

(4/2) [redacted]

CALL BOEHNER

1. HAS NSA WORKED CLOSELY WITH US ON OUR INVESTIGATION

2. DO THEY KNOW WE WROTE A REPORT

3. DOES IT CONTAIN INFO THEY ARE NOT AWARE OF?

4. DO THEY KNOW WE GAVE A COPY TO THE FBI?

5. DO THEY WANT A COPY?

M

OMNI HOTELS®

UTAH

2.

TUESDAY — 3/11 —

M

ENG GOALS

5:05

1980 — DONNIE — KALSTROM ~~UPSET~~ W/ REPORT — LOCKS HIM IN TO ELIMINATING MISSIL —

3/12 prob.

— NOT TO NTSB — YET

REFUSES TO SEE REPORT

DENIES — CITY TRANSCRIPT LIST TO MATCH WORKER REP NEEDS —

000030

KALSTROM IS THE HEAD OF THE CRIMINAL INVESTIGATION AND WILL DETERMINE WHAT GOES TO WHOM - DIRECTOR DISAGREED - KELLY DIRECTED ME NOT TO DELIVER REPORT TO NTSB - IT WAS ON HIS (KELLY'S) AND KALSTROM'S SHOULDERS -

THURSDAY 3/13/97 - 3:10 PM -
CALL DIRECTOR ([redacted] P)

ADVISED (DIRECTED BY) KELLY NOT TO FORWARD REPORT TO NTSB - KELLY TOLD DIRECTOR THAT KALSTROM HAD A COPY OF THE REPORT AND THAT'S WHERE IT SHOULD STAY -

3/13 CALLED DONNIE (7990) - WHO SAID (PER MARK D'ARTY) JACK IS OVER
3:30 PM AT THE FBI OFFICE DELIVERING REPORT TO KALSTROM - DONNIE SAID HE HAD TO GIVE JACK A "DIRECT ORDER" TO DELIVER REPORT - AFTER I CALLED HIM FROM THE CAR - HE CHECKED WITH JACK TO FIND THAT HE WAS WAITING FOR KALSTROM TO CALL HIM BACK - AS OF THAT TIME HE HADN'T DELIVERED THE REPORT

TOLD DONNIE TO ADVISE JACK NOT TO DELIVER REPORT TO NTSB TOMORROW PER MR KELLY PER THE DIRECTOR - ASKED DONNIE TO FIND OUT FROM JACK - TIME - TO WHOM AND THEIR REACTION/RESPONSE -

3:40 - CALLED DIRECTOR & ADVISED HIM OF DONNIE'S COMMENTS - ~~[illegible]~~

4:11 CALL FROM DONNIE WHO SAID - JACK GAVE REPORT TO KALSTROM AT 3:30 PM TODAY - KALSTROM SAID HE IS IN CHARGE OF THE INVESTIGATION AND HE DIDN'T [illegible] THE REPORT RELEASED -

000031

4:30 [illegible]

3.

U.S. Department of Justice

Federal Bureau of Investigation

In Reply, Please Refer to
File No.

26 Federal Plaza
New York, New York 10278
March 17, 1997

Mr. James E. Hall
Chairman
National Transportation Safety Board
490 L'Enfant Plaza East, S.W.
Washington, D.C.20594

Dear Mr. Chairman,

Enclosed please find one copy of a "Statement of ATF Certified Fire Investigator", I/N 63122 96 0060 Z, dated January 20, 1997. This report was provided to me on March 13, 1997 by the ATF Special Agent in Charge in New York.

The publication of this unsolicited and premature report by the ATF violates the agreement made by them regarding their participation in this investigation. I believe it is unfortunate that ATF, for reasons that are unknown to me, chose to prepare a report expressing an opinion regarding the cause of this tragedy before the investigation has been completed. It is an extraordinary violation of investigative protocol.

I have provided the original and a copy to FBIHQ and requested that the FBI Laboratory review the information in the report and contact ATF to obtain all information they relied upon to produce this document. I have also asked Director Freeh to express the FBI's displeasure regarding this incident to the highest levels of the ATF.

Sincerely,

James K. Kallstrom
Assistant Director in Charge

265A-NY-259028-SUB LAD
15

(12/31/1995)

FEDERAL BUREAU OF INVESTIGATION

Precedence: IMMEDIATE **Date:** 03/14/1997

To: DIRECTOR, FBI

From: ADIC, NEW YORK

Approved By: Kallstrom James K

Drafted By: Roth James J:jjr

Case ID #: 265-NY- (Pending)

Title: CRASH OF TWA FLIGHT 800
JULY 17, 1996

Synopsis: To provide FBIHQ with ATF report on this matter.

Enclosures: Enclosed is an original and one copy of a "Statement of ATF Certified Fire Investigator", I/N 63122 96 0060 Z, dated January 20, 1997.

Details: The enclosed report was provided to ADIC Kallstrom by NY ATF SAC Ballas on 3/13/97. It contains opinions regarding the sequence in which the aircraft came apart as well as cause of the crash. By way of background, NY notes that, at the outset of the TWA investigation, ATF agreed that, since the FBI is the lead criminal investigative agency for TWA Flight 800, they would not produce any independent reports regarding the investigation.

The publication of this unsolicited, premature report violates the agreement made by ATF regarding their participation in the TWA investigation. ADIC, NY believes ATF's preparation of a report providing an opinion regarding the cause of this tragedy while knowing full well, among other things, that the investigation is continuing; that parts of the aircraft are still being recovered; that substantial parts of the side walls of the center fuel tank have not been recovered or identified and potentially significant pieces, i.e., the scavenger pump, have not been recovered; that the reconstruction of the aircraft is ongoing; and that other testing, i.e., metallurgical examinations, China Lake missile testing, is planned or ongoing is unprofessional and reprehensible. ATF has produced a report which, it is fair to say, attributes the crash to a mechanical failure before the NTSB has completed its own inquiry or issued a report. If the cause of the crash is determined to be mechanical, ATF may find itself in conflict with the analysis of NTSB, the agency charged by law with responsibility for aircraft accident investigations. In addition, if in the end the evidence indicates that the crash resulted from a criminal act, the ATF report, prepared without benefit of a complete investigation or access to all the information available, will no doubt be discoverable as Brady material.

To: DIRECTOR, FBI From: ADIC, NEW YORK
Re: 265-NY-, 03/14/1997

ADIC, New York is very concerned about the preparation of this report and the basis for the opinions expressed therein. ADIC request that the FBI Laboratory immediately review this report and obtain from ATF all information, including copies of any interviews conducted by ATF, which were relied upon to produce the opinions expressed therein. ADIC, New York also strongly recommends that the Director express to the highest levels of the ATF, the FBI's displeasure over this extraordinary breach of investigative protocol.

New York will provide copies to NTSB and the USA, EDNY, directly.

♦♦

Central Intelligence Agency

Washington, D.C. 20505

5.

28 March 1997

Mr. James K. Kallstrom
Assistant Director in Charge
Federal Bureau of Investigation
26 Federal Plaza
New York, New York 10278

Dear Mr. Kallstrom:

As you are aware, missile analysts at the Central Intelligence Agency have been working closely with special agents at the Federal Bureau of Investigation during the past eight months in an attempt to examine the hypothesis that a missile caused the TWA Flight 800 disaster on 17 July. Of particular concern to FBI investigators and CIA analysts are accounts from dozens of eyewitnesses who reported seeing an object—usually described as a "flare" or "firework"—ascend and culminate in an explosion.

Our analysis demonstrates that the eyewitness sightings of greatest concern to us—the ones originally interpreted to be of a possible missile attack—took place after the first of several explosions aboard the aircraft. We conclude that almost certainly what these eyewitnesses saw was the crippled aircraft after the first explosion had already taken place.

Our analysis, combined with the total absence of physical evidence of a missile attack, leads CIA analysts to conclude that no such attack occurred.

We are willing to brief you on the details of our analysis at your convenience.

Sincerely,

John C. [redacted]nnon
Deputy Director f[redacted] Intelligence

Enclosure:
Analytic Assessment

FBI-00003572

1421

Introduction

On 17 July 1996, Trans World Airlines Flight 800 departed from New York's John F. Kennedy Airport enroute to Paris. Twelve minutes into the flight, as the jumbo jet climbed to its cruising altitude, there was a catastrophic explosion and the Boeing 747 plunged into the Atlantic Ocean 9 miles off the coast of Long Island. All 230 people aboard perished, making it one of the most lethal disasters in commercial aviation history. Hundreds of eyewitnesses in the Long Island area witnessed portions of the event.

Since then, investigators have been working continuously seeking the cause of the explosion. They have focused on three possible causes—a bomb, a missile, or a mechanical failure. Of particular concern to FBI investigators and CIA analysts are accounts from dozens of eyewitnesses who reported seeing an object—usually described as a "flare" or "firework"—ascend and culminate in an explosion. Many people postulated that these eyewitnesses saw a missile destroy the aircraft

At the request of the FBI, CIA weapons analysts were asked to look into this possibility. The CIA conclusion: A missile was <u>not</u> involved. The eyewitness sightings of greatest concern—the ones originally interpreted to be of a possible missile attack—took place after the first of several explosions aboard the aircraft. What these eyewitnesses saw was in fact the <u>crippled aircraft after the first explosion had already taken place</u>.

Analysis

A major complication in determining what happened to Flight 800 was the fact that the flight data recorder and cockpit voice recorder ceased operating just after the initial explosion aboard the aircraft. The data recorder registered no unusual activity prior to the end of its operation. But the voice recorder registered a fraction of a second of "loud noise" just before it ceased operating. National Transportation Safety Board analysts concluded that this was sound from the first explosion—the one that initiated the destruction of the aircraft.

Based on flight recorder data and airport radar tracking, the aircraft's location, altitude, speed, and heading at the instant its recorders ceased operating are known. This information was used to determine the distance and direction of travel of the aircraft with respect to each eyewitness at the instant the aircraft exploded. This, in turn, made it possible

to calculate how long it took sound from the explosion to reach each eyewitness, and to associate what eyewitnesses heard with what they saw.

The concept used here is similar to a technique a person can use to determine how far away a lightning strike is—by estimating how long it takes to hear thunder after the lightning is seen. Because sound in air travels about 1,100 feet per second, an observer who hears thunder five seconds after seeing a lightning strike knows that the lightning is about 1 mile away.

On the evening of 17 July, many eyewitnesses reported hearing a loud "boom" as part of their observations, often followed at varying intervals by one or two smaller "booms." Knowing that the first of these sounds originated when the recorders ceased operating (831:07.5 PM), it was possible to synchronize many eyewitnesses' visual observations with activity aboard Flight 800 by calculating how long it took sound to travel from the known location of the aircraft when it exploded to each of these eyewitnesses.

We can be confident that no sound from the aircraft audible to eyewitnesses was produced before the sound heard at the end of the cockpit voice recording. The closest eyewitness hearing such sounds was more than 8 miles away. Any sound heard at this distance and produced near the aircraft before the recording ended would have been recorded.

Using the eyewitnesses' visual and sound observations—combined with tracking data from the radars and infrared data from an intelligence sensor—CIA analysts were able to reconstruct the approximate path of Flight 800 from the instant its recordings ended until it hit the water. The following postulated sequence of events is based on that analysis:

Just after the initial explosion at 831:07.5 PM, the aircraft pitched up abruptly and climbed several thousand feet from its cruise altitude of 13,800 feet to a maximum altitude of about 17,000 feet. This is consistent with information provided by National Transportation Safety Board and Boeing engineers indicating that the front third of the aircraft, including the cockpit, separated from the fuselage just two to four seconds after the initial explosion. This significant sudden loss of mass from the front of the aircraft caused the rapid pitch-up.

The initial explosion was not seen by any known eyewitness. But the subsequent fire trailing from the aircraft was clearly visible to many of the closest eyewitnesses on the land and sea, and some of the eyewitnesses in other aircraft. The rising, burning aircraft is consistent with what some eyewitnesses described as "an ascending, bright white light resembling a flare or firework."

Shortly after Flight 800 reached the apex of its ascent—about 15 seconds or so after the initial explosion—a second explosion on the aircraft occurred. This explosion was clearly visible to many eyewitnesses, and often was described as "a small fireball." It was not as loud as the initial explosion, but was clearly audible more than 10 miles away.

Following this second explosion, the aircraft went into a very steep and rapid descent, falling 2 miles and traveling horizontally almost 2 miles in less than 25 seconds. As the aircraft descended, it produced an increasingly visible fire trail. When it reached an altitude of about 1 mile—42 seconds after the initial onboard explosion—the aircraft's left wing separated from the fuselage, releasing the unburned fuel in the left wing's fuel tanks. The fuel's subsequent ignition and burning produced a dramatic fireball visible to eyewitnesses more than 40 miles away, and detected by an infrared sensor aboard the US Defense Support Program (DSP) missile warning satellite.

About 50 seconds after the initial explosion—eight seconds after the left wing detached—the aircraft and detached wing hit the water.

CIA analysts developed the characterization above using technical data and accounts from the few eyewitnesses who were relatively close to the disaster, and who provided detailed descriptions of what they saw and heard. This portrayal then was evaluated against descriptions provided by almost 200 additional eyewitnesses.

Not surprisingly, most eyewitnesses saw only the most conspicuous segment of the disaster—the ignition of the fuel and resulting fireball in the 10 seconds or so just before the aircraft hit the water. There are three distinctive characteristics analysts used to conclude that these eyewitnesses saw only the end of the aircraft's descent and not a missile.

First, sound from the initial explosion took from 42 to 102 seconds to reach each of the eyewitnesses claiming to have heard sounds associated with the disaster. Therefore, things eyewitnesses reported seeing at about the time when they heard the first sound are known to have taken place well after the first explosion occurred.

Second, many eyewitnesses described only things happening within about 10 seconds of the time that the left wing detached from the fuselage. This was a very well-defined event, resulting in two distinct fireballs falling to the ocean. The left wing is known to have detached about 42 seconds after the initial explosion.

And third, many eyewitnesses described only things happening within about 10 seconds of the time that they observed a large fire or "cascading" flames. These flames could only be from the burning fuel released and ignited after the left wing detached.

Using the above process of elimination, the majority of observations can be demonstrated to have occurred well after the initial explosion. Consequently, none of these observations can be of a missile which caused this explosion.

The remaining eyewitness accounts describe events fully consistent with observations expected if only the aircraft in various stages of crippled flight were being observed. There is nothing in this last category of eyewitness statements that provides any evidence that a missile was used to shoot down Flight 800.

Indeed, several eyewitnesses, confident that they had seen a missile destroy an aircraft, were puzzled that they hadn't actually seen the aircraft before the missile hit it. Only a few eyewitnesses described seeing the aircraft at all, even though it should have been illuminated by the setting sun and clearly visible to any observer witnessing a missile approach and destroy it. The fact that only a few eyewitnesses reported seeing the aircraft—which should have been readily visible—suggests that many eyewitnesses may have seen only the crippled aircraft without realizing it.

Conclusions

CIA analysts do not believe that a missile was used to shoot down TWA Flight 800. To date, there is absolutely no evidence, physical or otherwise, that a missile was employed.

Speculation that a missile was involved originally was put forward based totally on the testimony of eyewitnesses who were attempting to assist the Federal Bureau of Investigation and National Transportation Safety Board as these agencies probed into the possible causes of the tragedy. Without the assistance of these eyewitnesses, the accounting given here would not have been possible.

National Transportation Safety Board

Washington, D.C. 20594

Safety Recommendation

Date: December 13, 1996

In reply refer to: A-96-174 through -177

Honorable Linda Hall Daschle
Acting Administrator
Federal Aviation Administration
Washington, D.C. 20591

On July 17, 1996, about 2031 eastern daylight time, a Boeing 747-131, N93119, operated as Trans World Airlines Flight 800 (TWA800), crashed into the Atlantic Ocean, about 8 miles south of East Moriches, New York, after taking off from John F. Kennedy International Airport (JFK), Jamaica, New York. All 230 people aboard the airplane were killed. The airplane, which was operated under Title 14 Code of Federal Regulations (CFR) Part 121, was bound for Charles De Gaulle International Airport (CDG), Paris, France. The flight data recorder (FDR) and cockpit voice recorder (CVR) ended simultaneously, about 13 minutes after takeoff. Evidence indicates that as the airplane was climbing near 13,800 feet mean sea level (msl), an in-flight explosion occurred in the center wing fuel tank (CWT);[1] the CWT was nearly empty.

A substantial portion of the airplane wreckage has been recovered from the ocean floor. Among the debris found along the first part of the wreckage path were CWT parts from spanwise beam Nos. 2 and 3, the forward spar, and debris from beneath and forward of the center wing section (see Figure 1). The cockpit of the airplane and pieces of the forward fuselage were found in a second debris field that was more than 1 mile from the beginning of the wreckage path. Fragmented wing and aft fuselage parts were recovered from a third debris field farther along the wreckage path.

Portions of the airplane have been reconstructed, including the CWT, the passenger cabin above the CWT, and the air conditioning packs and associated ducting beneath the CWT. The reconstruction thus far shows outward deformation of the CWT walls and deformation of the internal components of the tank that are consistent with an explosion originating within the tank. Airplane parts[2] from in and around the CWT recovered and identified to date contain no evidence

[1] The flight engineer from the previous flight remembered having left about 300 pounds, or about 50 gallons, of fuel in the approximately 13,000 gallon capacity tank. The recovered fuel gauge indicated slightly more than 600 pounds (about 100 gallons) of fuel remaining in the CWT.

[2] Includes portions of the fuselage structure from above, air conditioning packs and ducting from below, wing structure from both sides, all tires from behind, and numerous components that included the large fiberglass water and cargo fire extinguisher containers from forward of the CWT.

of bomb or missile damage. The investigation into what might have provided the source of ignition of the fuel-air mixture (including a bomb or missile) in the CWT is continuing.

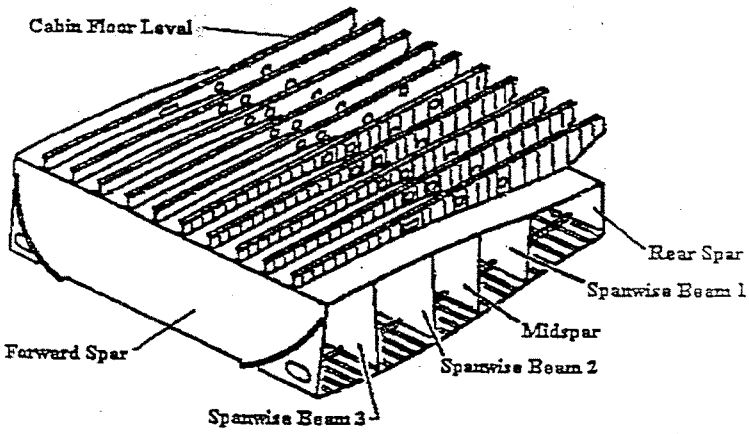

Figure 1. Center Wing Fuel Tank

Since 1985, the Safety Board has investigated or assisted in the investigation of two other fuel tank explosions involving commercial transport-category airplanes. The most recent accident involved a Philippine Airlines B-737-300 at Ninoy Aquino International Airport, Manila, Philippines, on May 11, 1990. In that accident, the CWT ullage[3] fuel-air vapors exploded as the airplane was being pushed back from a terminal gate, resulting in 8 fatalities and 30 injuries. The ambient temperature at the time of the accident was about 95°F, and the airplane had been parked in the sun. Although damage to wiring and a defective fuel quantity sensor were identified as possible sources of ignition, a definitive ignition source was never confirmed.

The Safety Board also assisted in the investigation of the crash of Avianca flight 203, a B-727, on November 27, 1989. The airplane had departed Bogota, Colombia, about 5 minutes before the crash. Examination of the wreckage revealed that a small bomb placed under a passenger seat, above the CWT, had exploded. The bomb explosion did not compromise the structural integrity of the airplane; however, the explosion punctured the CWT and ignited the fuel-air vapors in the ullage, resulting in destruction of the airplane.

Earlier, the Safety Board conducted a special investigation of the May 9, 1976, explosion and in-flight separation of the left wing of an Iranian Air Force B-747-131, as it approached Madrid, Spain, following a flight from Iran. Witnesses reported seeing a lightning strike to the

[3] In a fuel tank, the ullage is the vapor-laden space above the level of the fuel in the tank.

left wing, followed by fire, explosion, and separation of the wing. The wreckage revealed evidence of an explosion that originated near a fuel valve installation in the left outboard main fuel tank. The Safety Board's report[4] noted that almost all of the electrical current of a lightning strike would have been conducted through the aluminum structure around the ullage. While the report did not identify a specific point of ignition, it noted that static discharges could produce sufficient electrical energy to ignite the fuel-air mixture, but that energy levels required to produce a spark will not necessarily damage metal or leave marks at the point of ignition.

Fuel tank explosions require an energy source sufficient for ignition and temperatures between the lower explosive (flammability) limit (LEL)[5] and upper explosive limit (UEL), which will result in a combustible mixture of fuel and air. Current Federal Aviation Administration (FAA) regulations require protection against the ignition of fuel vapor by lightning, components hot enough to create an autoignition, and parts or systems failures that could become sources of ignition. Specifically:

> **Fuel system lightning protection.** The fuel system must be designed and arranged to prevent the ignition of fuel vapor within the system by (a) direct lightning strikes to areas having a high probability of stroke attachment; (b) swept lightning strikes to areas where swept strokes are highly probable; and (c) corona and streamering at fuel vent outlets. (Part 25.954)
>
> **Fuel Tank Temperature.** (a) The highest temperature allowing a safe margin below the lowest expected auto ignition temperature of the fuel in the fuel tanks must be determined. (b) No temperature at any place inside any fuel tank where fuel ignition is possible may exceed the temperature determined under paragraph (a) of this section. This must be shown under all probable operating, failure, and malfunction conditions of any component whose operation, failure, or malfunction could increase the temperature inside the tank. (Part 25.981)

However, a 1990, Society of Automotive Engineers technical paper comments, "...if the ignition source is sufficiently strong (such as in combat threats), it can raise the fluid temperature locally and thus ignite a fuel that is below its flash point temperature. This is particularly true with a fuel mist where small droplets require little energy to heat up."[6] Elevated, possibly extremely high local temperatures would have been associated with the lightning strike of the Iranian B-747 in 1976.

---

[4] NTSB-AAR-78-12. The Safety Board did not determine the probable cause of this foreign accident because it had no statutory authority to do so. Several hypotheses addressing the sequence of events and possible causes of the accident were presented in the Board's report.

[5] Marks' Standard Handbook for Mechanical Engineers, Eighth Edition, states, "The lower and upper limits of flammability indicate the percentage of combustible gas in air below which and above which flame will not propagate. When a flame is initiated in mixtures having compositions within these limits, it will propagate and therefore the mixtures are flammable." Marks' states further, "The autoignition temperature of an air-fuel mixture is the lowest temperature at which chemical reaction proceeds at a rate sufficient to result eventually (long time lag) in inflammation." (In the TWA800 CWT, the LEL was about 115°F, and the autoignition temperature was about 440°F.)

[6] Society of Automotive Engineers (SAE) Technical Paper Series 901949, Flammability of Aircraft Fuels, by N. Albert Moussa, BlazeTech Corp., Winchester, Massachusetts, as presented at the Aerospace Technology Conference and Exposition, Long Beach California, on October 1-4, 1990.

Despite the current aircraft certification regulations, airlines, at times, operate transport-category turbojet airplanes under environmental conditions and operational circumstances that allow the temperature in a fuel tank ullage to exceed the LEL, thereby creating a potentially explosive fuel-air mixture. For example, on August 26, 1996, Boeing conducted flight tests with an instrumented B-747 airplane that carried about the same small amount of fuel in the center wing tank as that carried aboard TWA800. All three air conditioning packs were operated on the ground for about 2 hours to generate heat beneath the CWT. The airplane was then climbed to an altitude of 18,000 feet msl. The temperature of the fuel in the center tank of the test airplane was measured at one location, and the air temperature within the tank was measured at four locations. In this test, the fuel-air mixture in the CWT ullage was stabilized at a temperature below the LEL on the ground. However, as the airplane climbed, the atmospheric pressure decreased (the LEL decreases with decreasing atmospheric pressure) reducing the LEL temperature and allowing an explosive fuel-air mixture to exist in the tank ullage.

Fuel tank temperatures may also become elevated, allowing explosive fuel-air mixtures to exist in the ullage, when airplanes are on the ground between flights at many airports worldwide during warm weather months. When the temperature of a combustible fuel-air mixture exceeds the LEL, a single ignition source exposed to the ullage could cause an explosion and loss of the airplane. This situation is inconsistent with the basic tenet of transport aircraft design—that no single-point failure should prevent continued safe flight.[7]

Without oxygen in the fuel-air mixture, the fuel tank ullage could not ignite, regardless of temperature or ignition considerations. The military has prevented fuel tank ignition in some aircraft through the creation of a nitrogen-enriched atmosphere (nitrogen-inerting) in fuel tank ullage, thereby creating an oxygen-deficient fuel-air mixture that will not ignite. Although this technology could be applied to civil aircraft, there are no transport-category airplanes of which the Safety Board is aware that currently incorporate nitrogen-inerting systems to reduce the potential for fuel tank fires and explosions.

Nitrogen-inerting has been accomplished several ways: by adding nitrogen to fuel tank(s) from a ground source before flight; by discharging onboard supplies of compressed or liquified nitrogen in flight; or by the use of on-board inert gas generation systems that separate air into nitrogen and oxygen. Such systems in current-generation military aircraft incorporate lightweight, permeable plastic membrane systems that produce high nitrogen flow rates and require only "on-condition" maintenance. Nitrogen-inerting using a ground source of nitrogen might prevent explosions such as those that occurred to the TWA800 and Avianca airplanes, but may not prevent an explosion after the fuel tanks have been emptied during flight through fuel consumption, or when ullage is exposed to warmer air as an airplane descends—situations that existed in the Iranian Air Force B-747 accident. Nitrogen-inerting fuel tank ullage has been used for more than 25 years in military airplanes and could be used to protect commercial air transportation. However, the Safety Board recognizes that development and installation of such

[7] FAA Advisory Circular (AC) 25.1309-1A, System Design and Analysis, paragraph 5.a.1 states, "In any system or subsystem, the failure of any single element, component, or connection during any one flight (take-off through ground deceleration to stop) should be assumed, regardless of its improbability. Such single failures [illegible] not prevent continued safe flight and landing, or significantly reduce the capability of the airplane or the [illegible] of the crew to cope with the resulting mature conditions."

systems are expensive and may be impractical because of system weight and maintenance requirements in some airplanes.

Therefore, the Safety Board has considered other modifications of the airplane that would reduce the potential for aircraft fuel tank explosions. A reduction in the potential for fuel tank explosions could be attained by reducing the heat transfer to fuel tanks from sources such as hot air ducts and air conditioning packs[5] that are now located under or near fuel tanks in some transport-category airplanes. This may be achieved by installing additional insulation between such heat sources and fuel tanks that must be collocated with heat-generating equipment such as hot air ducting and air conditioning packs.

Because the Safety Board believes that the FAA should require the development and implementation of design or operational changes that will preclude the operation of transport-category airplanes with explosive fuel-air mixtures in the fuel tanks, significant consideration should be given to the development of airplane design modifications, such as nitrogen-inerting systems and the addition of insulation between heat-generating equipment and the fuel tanks. Appropriate modifications should apply to newly certificated airplanes, and where feasible, to existing airplanes.

The Board recognizes that such design modifications take time to implement and believes that in the interim, operational changes are needed to reduce the likelihood of the development of explosive mixtures in fuel tanks. Two ways to reduce the potential of an explosive fuel-air mixture could be by refueling the CWT to a minimum level from cooler ground fuel tanks or by carrying additional fuel. Therefore, by monitoring fuel quantities and temperatures (when so-equipped), by controlling the use of air conditioning packs and other heat-generating devices or systems on the ground, and by managing fuel distribution among various tanks to keep all fuel tank temperatures in safe operating ranges and a to-be-determined minimum fuel quantity in the CWT, flightcrews could reduce the potential for fuel tank explosions in the B-747. The Safety Board believes that pending implementation of design modifications, the FAA should require modifications in operational procedures to reduce the potential for explosive fuel-air mixtures in the fuel tanks of transport-category aircraft. In the B-747, consideration should be given to refueling the CWT before flight whenever possible from cooler ground fuel tanks, proper monitoring and management of the CWT temperature, and maintaining an appropriate minimum fuel quantity in the CWT.

The Safety Board has also found that the Trans World Airlines B-747 Flight Handbook used by crewmembers understates the extent to which the air conditioning packs can elevate the temperature of the B-747 CWT. The Handbook notes that pack operation may elevate the temperature of the CWT by an additional 10 to 20°F. However, in the August 26, 1996, B-747 flight tests with three air conditioning packs in operation, the temperature of the center tank fuel increased by approximately 40°F. A 40°F temperature increase in the CWT of TWA800 would have raised the temperature of the ullage above the LEL of its fuel-air mixture. The Handbook also states, "warm fuel...may cause pump cavitation and low pressure warning lights may come

[5] Airplanes other than the B-747 also have heat-producing equipment in the vicinity of fuel tanks. For example, the A-320 and other Airbus Industrie commercial transport airplanes are similar to those from Boeing in that the air conditioning packs and ducts are located [illegible]

on steady or flashing." The Board is concerned that the flight handbooks of other operators of the B-747 may have similar deficiencies. Therefore, the Safety Board believes that the FAA should require that the B-747 Flight Handbooks of TWA and other operators of B-747s and other aircraft in which fuel tank temperature cannot be determined by flightcrews be immediately revised to reflect the increases in CWT temperatures found by flight tests, including operational procedures to reduce the potential for exceeding CWT temperature limitations.

Although the TWA B-747 Flight Handbook (and the Boeing Airplane Flight Manual) instruct flightcrews not to exceed fuel temperatures of "54.5C (130F), except JP-4 which is 43C (110F)," the only fuel tank temperature indication displayed for flightcrews is that of the outboard main tank in the left wing. The designs of the B-747 and some other airplanes currently provide no means to measure the temperature of the fuel or ullage of fuel tanks that are located near heat sources. The Safety Board believes that flightcrews need to monitor the temperature of fuel tanks that are located near heat sources, including the CWT in B-747s. Therefore, the Safety Board believes that the FAA should require modification of the CWT of B-747 airplanes and the fuel tanks of other airplanes that are located near heat sources to incorporate temperature probes and cockpit fuel tank-temperature displays to permit determination of the fuel tank temperatures.

Therefore, the National Transportation Safety Board recommends that the Federal Aviation Administration:

> Require the development of and implementation of design or operational changes that will preclude the operation of transport-category airplanes with explosive fuel-air mixtures in the fuel tanks:
>
> > (a) Significant consideration should be given to the development of airplane design modifications, such as nitrogen-inerting systems and the addition of insulation between heat-generating equipment and fuel tanks. Appropriate modifications should apply to newly certificated airplanes and, where feasible, to existing airplanes. (A-96-174)
> >
> > (b) Pending implementation of design modifications, require modifications in operational procedures to reduce the potential for explosive fuel-air mixtures in the fuel tanks of transport-category aircraft. In the B-747, consideration should be given to refueling the center wing fuel tank (CWT) before flight whenever possible from cooler ground fuel tanks, proper monitoring and management of the CWT fuel temperature, and maintaining an appropriate minimum fuel quantity in the CWT. (Urgent) (A-96-175)
>
> Require that the B-747 Flight Handbooks of TWA and other operators of B-747s and other aircraft in which fuel tank temperature cannot be determined by flightcrews be immediately revised to reflect the increases in CWT fuel temperatures found by flight tests, including operational procedures to reduce the potential for exceeding CWT temperature limitations. (A-96-176)

BEST COPY

Require modification of the CWT of B-747 airplanes and the fuel tanks of other airplanes that are located near heat sources to incorporate temperature probes and cockpit fuel tank temperature displays to permit determination of the fuel tank temperatures. (A-96-177)

Chairman HALL, Vice Chairman FRANCIS, and Members HAMMERSCHMIDT GOGLIA, and BLACK concurred in these recommendations.

By: Jim Hall
Jim Hall
Chairman

BEST COPY

Terry: For you
Mac

December 15, 1996

To: SSA Ken Maxwell

From: SA Dennis R. Smith

Sub: National Transportation Safety Board (NTSB) Safety Recommendation dtd December 13, 1996

The overall feeling of all the parties working at the Calverton facility on determining the cause of the crash of TWA 800 is that they have been blindsided by the NTSB by the December 13 Safety Recommendation. I have included a copy of the Safety Recommendation. The Safety Recommendation is based on speculative theory as unsupported by evidence as any of the wilder theories that have floated through the Calverton facility. The real tragedy is that the recommendation is something that the NTSB obviously had been working on for several weeks with minimal input from any of the other parties to the investigation.

On Friday, December 13, 1996 a meeting was hastily called by Bob Swaim, NTSB Systems Group, to explain some tests he was going to be conducting at the Naval Test Center at Pautxant River, Maryland on Thursday, December 19. During his brief meeting he made reference to a Safety Recommendation that was going to come out "this weekend" however Investigator In Charge (IIC) Al Dickinson corrected Swaim and stated the recommendation was coming out that day, December 13. Again, all of this was a complete surprise to all of the parties at Calverton.

Bob Swaim and the NTSB apparently have decided to operate totally outside the Systems Group and further, totally outside of the way that they say they are going conduct aircraft accident investigations with their theory on the cause of the crash of TWA 800. The NTSB investigation was being conducted by the Party system with parties supplying members to various groups who were to carefully and methodically examine the wreckage, write up their findings, agree on the findings, and then see this collection of documents become the basis for a factual report as to what happened to TWA 800. On the basis of the final factual report a cause for the accident could be determined, if possible, and recommendations could then be made. The NTSB appears to be going off on a tangent as exemplified by the December 13 Safety Recommendation that contains recommendations based on information that probably not a single party to the investigation would agree to had they been asked.

The following then are my observations on the Dec. 13 Safety Recommendation:

The first paragraph describes the accident and states that the airplane center wing tank (CTW) exploded at 13,800 feet. We have no had evidence telling investigators where exactly the CWT explosion occurred.

The second paragraph briefly describes debris fields in very simple terms. Evidence has shown that the debris fields are extensive and very much more complex than description provided by the NTSB.

The third paragraph describes the CWT by stating that "The reconstruction thus far shows outward deformation of the CTW walls and deformation of the internal components of the tank that are consistent with an explosion originating within the tank." First of all, I have extensive personal experience with the side walls of the CWT having participated in the reconstruction of these components and to date have not seen evidence that would believe the side walls failed due to an explosion. Those whom I have asked, including the FBI metallurgist, Bill Tobin, have described components of the sides of the tank as having failed in compression and probably at water impact or wing bending. Further, recent briefings of the NTSB Sequencing Group have described the top of the tank as having failed under compression. The description of the CWT in paragraph three does not agree with what the NTSB Structures Group and Sequencing Group are documenting.

Paragraph three states that there is no evidence of bomb or missile damage in the CWT. To date that is correct however there is currently no evidence of anything except what appears to be a conflagration of some sort with no evidence of ignition source in the CWT.

The Safety Recommendation goes on to cite three accidents where explosions occurred in commercial airliners. The first was a 1985 incident in which a Philippine Airlines B-737 blew up as the aircraft was being pushed back from a gate in the Philippines. A defective fuel quantity sensor and damaged wiring was found with that accident however a definitive ignition source was never found. It should also be noted that the B-747 does not have a fuel quantity sensor float switch like the B-737.

The second accident was a B-727 that was brought down by a small bomb. Obvious ignition source. The third accident was an Iranian B-747 that was hit by lightning. Several million volts of electricity in the lightning strike obviously provided an ignition source however it should also be noted that lightning strikes are not that unusual and rarely cause catastrophic damage to an aircraft.

The Safety Recommendation outlines requirements for aircraft design on page 3 then has a very curious paragraph at the beginning of page four. Although the NTSB, and specifically Bob Swaim, advised the various parties to the crash investigation that the results of the Boeing tests that were conducted at Mojave, California could not be used as data for the TWA 800 investigation because the party system was not used and the criteria for the test was not agreed to by the NTSB Systems

Group, those very test results become the basis of the NTSB Safety Recommendation.

The NTSB and Bob Swaim are in the process of showing that TWA 800 was brought down by a flammable mixture in the fuel tank and a static electric spark caused by a wiggins fixture in the crossfeed manifold. To date a CWT explosion has not been documented by static electricity. In the case of TWA 800 most parties agree that a conflagration of some sort occurred in the CWT. The most casual observation by anyone will tend to make one believe that the conflagration occurred somewhere in the center of the tank. The physical evidence shows the internal cross members of the tank moved outward (fore and aft) from the center of the tank. The crossfeed manifold runs across the CWT at the very back of the tank. A static electrical discharge would have to ignite fuel vapors in the rear of the tank that would then carry a flame front forward to the center of the tank where the major conflagration appears to have occurred.

The TWA 800 NTSB crash investigation, if allowed to follow the normal procedures of the NTSB utilizing the expertise of all of the parties should be allowed to continue through to its logical conclusion and not be sidelined by a single theory that the NTSB appears to want to use to turn off the lights at the Calverton facility, dispose of the wreckage, raise havoc within the commercial aircraft community, and send everyone home. Both the NTSB and the FBI should run their concurrent investigations until all possible evidence has been examined (and maybe re-examined-by a "Second set of eyes" as the NTSB would put it) and all possible leads have been considered.

The Safety Recommendation made by the NTSB is premature and ill timed. The investigation into the cause of the crash of TWA 800 is far from over.

8.

MEMO

To: Thomas J. Mohnal

From: William A. Tobin

Date: Saturday, April 8, 1995

Subject: Response to Twarog Fax of 3/30/95

Pursuant to a telephone conversation this date with Daniel L. Twarog, Director of Research, American Foundrymen's Society, Inc., I became aware of a fax he sent to Dave Williams on March 30, 1995 and requested a copy of the fax. The following is my response to the information contained therein and is intended *for internal dissemination only*.

1) The UNABOM suspect has already been proven to use more than one composition of metal in his castings. In several of his early castings, unfused source material has been identified. The observation that the only reason he would change composition is if he needed specific properties is analagous to the argument that the only reason he would abrade surface characteristics of various components is to alter physical dimensions. It implies noncriminal intent, a fact contradicted by the making and sending of the bomb, and of other characteristics exhibited by the bomb components.

2) Aluminum does *not* take a "tremendous amount of BTU's to melt". In fact, it takes relatively little heat to melt aluminum, which can be melted in a campfire. In addition, "significant spikes" in home electric or gas bills presumes commercial power consumption. Information is available in the literature regarding the making of charcoal foundries. Cupolas can be made with nothing more than brick and charcoal, with tuyeres easily obtainable with a hair dryer or vacuum cleaner. However, even if the initial melt is made by induction heating, the amounts of aluminum are so limited that it is not likely that such a "spike" can be detected on a monthly electric bill and discernible from use of an electric [resistance] space heater or a ceramic kiln.

3) I will attempt to effect a search with my contacts at the American Society for Metals (of which I am a member, and frequently make technical presentations for them) upon my return from collaborating with Reynolds and Alcoa personnel.

cc: Unit Chief James E. Corby

MEMO

To: Unit Chief James E. Corby, MAU

From: William A. Tobin

Date: Tuesday, April 18, 1995

Subject: Concurrent UNABOM Metallurgy Examinations

Independent metallurgical evaluations on aluminum UNABOM samples were scheduled by the EU without any coordination with, or knowledge of, the MAU metallurgy examiner, effecting a disruption and temporary termination of FBI Lab metallurgical examinations. The information furnished thus far by the independent metallurgical investigation has been determined to be redundant, vague, presumptive, misguided, and/or outright erroneous. It is also noted that none of the information furnished to the EU from this independent investigation was voluntarily furnished to the MAU. In each case, I became aware of the information by chance alone.

Based on a review of the documents obtained, there has been no information of value generated by the metallurgical examinations prompted by the EU. However, my concerns are not with the value of the information, or lack thereof, had the outside testing involved only nondestructive evaluation and testing. Precious amounts of samples are being destroyed or altered to obtain this redundant or erroneous information, and the lengthy, misrepresented absence of the samples from the FBI Laboratory has held up forensic metallurgical examination progress on the aluminum samples which have the best potential for leads. It is noted that the assistance I elicited from my industry contacts were nondestructive and consumed no additional samples. Specific examples will be furnished below.

On Friday, March 31, 1995, I was advised by the principal EU examiner that the aluminum components in the devices would be taken on Tuesday to "...the nation's top casting experts..." at Oak Ridge National Laboratories. I had already scheduled consultations with my own industry contacts for that week, contacts who actually design and make the aluminum products. On April 4, 1995, all but two samples were taken from the metallurgy lab by the EU representative, with the representations that "...the samples will only be gone three days..." and "...only tiny drillings will be taken from the samples..." To date, none of the samples has been returned. In addition, there are critical marks on some of the aluminum samples which could be valuable in specifically associating a suspect. The EU representative who took the samples has no knowledge as to where the marks are located or as to which samples are critical and which are less critical.

During a telephonic conversation by SA Tobin with one of the individuals with whom the EU was consulting (president of the American Foundrymen's Society), the EU consultant advised he had sent a fax "last week" to the EU regarding his observations and recommendations. SA Tobin had to go the the EU to request a copy of the fax. It is noted that all three conclusions in the fax are completely erroneous [the first two] and could have resulted in a significant waste of taxpayer resources had they been acted upon, or are unnecessary [last one].

SA Tobin had the SIOC duty Sunday, April 16, 1995. In reviewing the duty agent briefs, a UNABOM update dated 4/12/95 written by "DRW" was observed. A full page of metallurgical information was reported in the update which apparently is sent to AD Ahlerich and the SIOC. The update information reports erroneous and/or misleading metallurgical information obtained from ORNL and NTSB. To date, SA Tobin has not been made aware of the information by the EU.

Specifics of Information Furnished

Some of the information "discovered" by SA Tobin, with responses:

"...the only reason he would change composition [by adding other metals] is if he needed specific properties..." [Director of Research, American Foundrymen's Society]

The UNABOMer has already been proven to use more than one composition of metal in his castings. Further, the assertion is analagous to saying the only reason the suspect would abrade the surfaces of his metal components [established MO] is to reduce the dimensions.

"...Aluminum takes a tremendous amount of BTU's to melt..." (suggesting electric bill spikes)[Ibid].

Aluminum does not require much thermal energy to melt. Aluminum can be easily melted in a campfire.

"Laboratory analysis has determined that pieces of aluminum found in IEDs #13, 14 and 15 were wrought aluminum, alloy 2024 series." [DRW update 4/12/95]

I don't know whose lab analyses this refers to but the statement does not represent FBI Laboratory analyses to date. First, the 2X24 family of alloys (of which 2024 is only one member) has only been specifically suspected in device #15 because two of the constituents are not in line with proper chemistries. Second, they are not in the wrought condition in the samples but rather appear to be cast (they almost certainly would have to have been cast in that the chemistries are not consistent with 2X24 alloys). Third, the 2X24 family has not been detected in devices #13 or 14.

The limited information derived from the ORNL examinations [p.2, DRW update 4/12/95] is redundant at best, with a heavy price paid in specimen integrity and quantity. Significantly less information was developed than already existed and the samples were irreparably damaged.

Their conclusion "...that these materials had originated from the airline industry..." is not scientifically or forensically sound. The pipe alloy and manner of fabrication were not identified, nor was the magnesium alloy identified. These metallurgical characteristics are either not exclusive to, or contraindicate use by, the airline industry. This appears to be a case of using the data to justify a predisposition or bias.

Place in Tobin's personal file.

Memo

To: Jim Corby
From: William A. Tobin
Date: September 12, 1995
Re: Explosives Unit Staffing

The preponderance of material which results in serious injury and/or death when a bomb forms kinetic shrapnel and/or destroys structural support members is metal. The explosion and consequent damage is a dynamic interaction of various materials, commencing with the expanding gases during the initial conflagration. The behavior and interaction of solids with gases, liquids, and each other, are the bases of metallurgy and materials science (e.g., corrosion is the interaction of metal with its gaseous or liquid environment). *The only academic disciplines with the proper scientific foundation to evaluate the deformation and damage behavior resulting from the dynamic interaction of materials in an explosion is metallurgy, metallurgical engineering, and materials science.*

Consider only one type of metal, with one composition, in only one condition (temper, ductility), subjected to only one force, acting along a single axis. Evaluation of the deformation and/or damage (i.e., elastic and plastic strain) resulting from an applied force can be a very complex process even under conditions of *static* loading. However, in "real life", and particularly in our forensic discipline of [dynamic] violence related activities, *static* loading *along one axis* is not common. Normally ductile material behavior changes radically when subject to conditions of stress triaxiality, changing from ductile to brittle behavior.

Introduction of dynamic conditions of loading (but less than impulsive) significantly complicates the equation. Impulsive loading (high end dynamic loading) requires even more complex considerations since time frequently does not allow the material under such loading to adjust to the applied force(s) in a "conventional" manner. Most of the materials submitted which are associated with crimes were formed, damaged, and/or otherwise effected by a

dynamic (higher strain rate) set of circumstances inherent in the violent nature of the offenses involved.

If the aforementioned material under study was the most prevalent engineering material in existence (plain carbon steel), consider altering the carbon content. The material will likely behave differently to many external stimuli. This difference in behavior resulting from the addition of a constituent, or the alteration in the amount of a constituent, is the reason for alloying. Changing the initial temper of the material can also alter the way it reacts to applied stresses. Altering its geometry can drastically alter its response. Billions of dollars of damage and legal litigation result each year from single scratches in materials which altered their response to cyclic loading. Differences in fabrication method alone typically result in fracture behavior and appearance differences. For example, cast and wrought items will generally manifest completely different fracture morphologies.

It is quite common, and based on my experience most frequent, that hypotheticals are posed to the "expert" witness in court. Without a proper academic background in deformation and damage mode evaluation and academic studies in fracture mechanics and mechanical metallurgy, I do not know how an explosive expert can testify that a metal was subjected to impulsive loading or that the fracture morphology is attributable to an explosion. Empirical explosive testing does not constitute adequate foundation for such testimony because of what I call the "blue Chevy Nova" failure in inductive and deductive reasoning. Empirical testing may show that all pieces of shrapnel from an explosion of ammonium nitrate may show reverse shear fractures (or that "all Chevy Novas are blue"), but it does not logically follow that all pieces of metal exhibiting reverse shear fractures were formed by an ammonium nitrate explosion (i.e., all blue cars are Chevy Novas).

Numerous instances of potential embarassment to the Bureau have been observed throughout the last 21 years wherein incorrect statements were made as to material, size, nomenclature, manner of deformation, source, or other physical, chemical or mechanical characteristics. In several, I was asked to "bail out" an examiner on the witness stand or after

official FBI Laboratory reports were issued. In others, I have viewed worksheet notes, the bases for examiner testimony and subject to discovery, with incorrect descriptions of fabrication techniques.

In this age of high technology, the FBI Laboratory can not afford to have "experts" with non-scientific academic backgrounds testifying in public courts. In the field of metallurgy alone, the high-tech materials and fabrication techniques coming into existence are alarming. Detection and identification of such materials and techniques are very difficult at best, in part because of the low atomic number components used (i.e., light weight materials such as lithium, beryllium, boron, carbon, nitrogen, etc) which are below the detection limits of most of our analytical techniques. Our interaction with the actual fabricators and manufacturers of the items (such as aircraft components) are necessarily on the technical and frequently metallurgical level.

Except for VANPAC and UNABOM, the metallurgical examinations requested in connection with bombing matters has dwindled to almost nonexistence. Even in UNABOM, I am finding that most of the evidence in the early devices were never subjected to metallurgical examinations.

The rationale for no metallurgical examinations has been that the explosives examiners did not want to wait for the results. First, during my association with the Explosives Unit, I have attempted to give them the quickest turnaround time possible, often providing same day service. It has also occurred that, many weeks after receiving my dictation, I find that the results were never conveyed to the field office via report or other form of communication but rather languished in the examiner's folder of notes to be included in the next outgoing report. Additionally, in twenty one years in the FBI Laboratory, I can conservatively characterize the frequency of my testimonies in a bombing trial other than VANPAC and a recent civil matter (wherein I conducted no examinations) as extremely rare and, to my recollection, none in the last 10 or 15 years . It is difficult to conceive that no forensic concerns or questions have

arisen during that time in connection with metals associated with the bombs or structures around the bombs.

It is my recommendation that the Explosives Unit be staffed with actual scientists trained in the field of metallurgy, metallurgical engineering, or materials science. Not only would this prevent non-scientists from having to testify as "experts" in the high-tech field of materials and as to complex materials interaction but also it would alleviate the "down time" concerns, real or perceived, that evidence must be farmed out for AE examinations. Additionally, it is much more feasible and scientifically sound to train a metallurgist or materials scientist as to explosive characteristics and components than it is to take an EOD type person and train him/her in materials science.

Place in DN's personnel folder

MEMO

To: Dr. Randall Murch

From: William A. Tobin WAT

Date: September 18, 1995

Subject: Update to Explosives Unit Staffing Memo of September 12, 1995

Attached please find a copy of captioned memo which I am providing per request of Acting Unit Chief Chris Fiedler.

As you are probably aware, the Metallurgy unit has had probably the most frequent interaction with the Explosives Unit through the years based on the myriad of materials involved in bombing matters. I have found that Explosive Unit examiners are outstanding at bombing scene searches, reconstruction, and graphic presentations. However, the memo suggests that they do not have the proper academic credentials, and are inadequately trained, to be offering technical opinions regarding materials and damage related thereto, including whether damage sustained is "high explosive damage", "low explosive damage", or even "explosive damage".

The current allegations may be founded in part by the fact that non-scientists are in a position of rendering opinions which should be scientifically founded. Further, on-scene conclusions of explosives type, quantity, and even detonation velocities, from a scientific standpoint, are quite suspect when based only on empirically derived perceptions classified as "experience", and possibly serve to place such examiners offering such opinions "in a bind" when the technical data are forthcoming, if it ever is. It is noted that, to present recollection, I have testified in less than 5 explosive type cases in over 20 years, and yet testimony certainly has been offered regarding metal identity, damage, deformation, and behavior of a significantly larger population of bombing matters. It is additionally noteworthy that 13 of the UNABOM devices spanning about 15 years were brought over for metallurgical examination only about a year ago. Over 95% of the device components were never subjected to metallurgical examinations.

In this age of high-tech specialization, a team approach to bombing scene investigation may be warranted, similar to metallurgical investigation of plane crashes, train derailments and maritime disasters to which I have responded, and worked with the National Transportation Safety Board. NTSB uses a multidiscipline approach in most of the disaster investigations to which I have responded.

1 Mr. Corby

MEMO

To: Bruce Wayne Hall

From: William A. Tobin

Date: Friday, May 3, 1996

Subject: Forensic Solder Examinations

Attached please find:

1) A copy of UNABOM Metallurgy Update dated 5/9/95

2) Lawrence Livermore National Laboratory Forensic Science Center Report dated 5/11/95, pages 1-5.

I have provided the above documents in support of my long held position which I have indicated on numerous occasions. In addition to the aforementioned documents relating to the solder examinations for UNABOM, telephonic discussions with Dr. Randich and others, it was indicated that during their research efforts, they conducted a number of blind tests on *uncontaminated* controls, could not specifically associate solders, and could only generally class a solder.

The import of these conversations and data is that forensic examinations of solder should serve forensically only to eliminate solders but not to specifically associate even *uncontaminated* solders unless more research, to include blind tests, is conducted or supportable data are cited.

MEMO

To: Tom Jourdan

From: William A. Tobin

Date: Wednesday, September 4, 1996

Subject: Observations From TWA 800 Investigation

It is my intent that this document more lucidly enunciate, clarify, and modify suggestions I have offered previously to the OIG Commission. The prior suggestions and observations were derived almost exclusively from laboratory interaction and no field interaction. This document is a direct result of having the first opportunity in memory of participating in a crime scene investigation with the Explosives Unit. The TWA 800 investigation is proceeding so well with regard to interdiscipline cooperation that I believe a number of lessons learned in the investigation may serve as a model for improvement in FBI Laboratory operations, particularly since the lessons, in large part, directly relate to portions of the OIG investigation. I am requesting the Commission be provided a copy of this memo or whatever portions you deem appropriate.

For perspective and background, this investigation entails recovery and reconstruction of a massive amount of fractured, deformed, and/or thermally damaged metal aircraft components. The components are already known to have been subjected to three of the most hostile conditions possible. There is a possibility that a fourth aggravating condition may have also been operative in destruction and degradation of the metal parts. Very rarely have a mid-air [fuel] explosion, water surface impact, short and medium term saltwater corrosion and possibly impulsive loading (bomb or missile) combined to degrade the variety of materials present on a commercial aircraft. This is an extraordinary combination of material interaction and degradation processes, most of which can serve to mask or destroy characteristics of the other. In addition, FBI interest may extend beyond whether or not a bomb or missile may have been responsible for the catastrophe. Noncompliance with material and/or testing specifications could conceivably result in criminal concerns.

Of paramount importance is to evaluate almost every fracture, puncture, fragmentation, tear, rip, deformation and thermal, mechanical, chemical and electrochemical damage existing on the recovered components. Also, due to the nature of the area, salvage has included metal parts which were metallurgically evaluated and concluded to have origins other than a Boeing 747 aircraft. In summary, this is a massive and technically complex metallurgical undertaking.

In the process of interacting with bomb squads from New York City, Suffolk County and Nassau County Police Departments, I see a strong, common thread in the manner of training and the reference material used for bomb techs. The training problem is not exclusive to the FBI Laboratory, and I suggest that it may be this training deficiency rather than any intent of some examiners to overstate the value of certain scientific evidence that is the cause of some of the questionable conclusions and testimony under investigation. Several decades ago I saw a similar training deficiency in the field of arson investigation and, after 10 years of research, a number of publications and seminars, use of the scientifically incorrect criterion [collapsed furniture springs] that had been used by arson investigators for a number of decades as a prima facie indicator of whether a fire was an arson or accidental, was largely nullified. It is my intent, when the TWA 800 investigation has effectively been completed, for the NTSB metallurgist and I to publish metallurgical findings and observations in bomb tech media to help correct the lack of metallurgical input into bomb tech training.

Valid empirical testing of metals subjected to explosive loading has in fact been conducted and the results of this testing are used for bomb tech training. However, the problem is not with the testing but rather with the *interpretation* of the resulting characteristics. In the testing, items were blown up and photos generated of the resulting damage, such as petalling, curling, erosion, pitting, starburst, rippling, spiking, etc. A source of discomfort and some hostility arose when I [diplomatically and/or indirectly] pointed out to most of the bomb techs present here, who have been using these indicia throughout their respective careers, that bombs and missiles are not the only sources of these characteristics. Every one of the characteristics listed above is present on the aircraft pieces recovered here. It is apparent from most of the conversations I have had with bomb techs here that this is the first exposure any have had with a materials scientist/metallurgist.

A number of years ago, I coined an analogy which I call the "The Blue Chevy Nova" thought process. Without training or experience in deductive and inductive reasoning, in scientific logic processes, or in metallurgy or materials science, if one is trained that "all Chevy Novas are blue", it is easy to find a fragment of blue auto body at a crime scene and conclude that the fragment is, therefore, from a blue Chevy Nova. It happened here almost daily for the first week or so after my arrival. Because certain characteristics result when metals are subjected to explosive loading, it does not follow that every time one sees those characteristics, explosives caused the damage.

After several weeks of low key briefings, personal interactions (both one on one and in small groups), and much humor, the problem has abated to the point where it is almost nonexistent. I might also add that the truly outstanding, cooperative effort that is now in effect is also due, in large part, to the personalities and professionalism of the principal individuals involved, Bob Heckman and Greg Carl.

Lastly, I add that I have been trusted with comments and information both from the NTSB and from the Air Accidents Investigation Branch, Department of Transport [England] representative. Without impuning individuals (that is not my intent), very strained relations

existed both on this investigation and two prior investigations in significant part due to the blue Chevy Nova logic process operative and in part due to the lack of scientific exchange expected among scientists. In the recent case, the phrases 'strong-armed' and 'intimidating' were used to describe what should have been scientific exchanges of information in the early stages of this investigation. "What else could have caused this", with no scientific explanation offered, was used on numerous occasions by one individual in an intimidating tone when specifics of how metal fragments could have formed were being discussed. When one of the metallurgists explained various mechanisms responsible and/or operative during the formation of fragments of interest, he expected some scientific exchange of data or information to support the counter theory but was continually met with "this is what I saw in Lockerbie from a bomb", or "...only a bomb can cause this damage...", with no scientific support offered. Further, the metallurgists were dismayed when the same examiner, during one of the exchanges, dug into passenger seats and proceeded to place fragments in pillboxes *without any concern for trajectory or direction of fragmentation,* and in spite of the fact that *the NTSB was presumably the lead investigative agency until proof of sabotage was developed.* An aircraft crash is a very dynamic interaction of many materials and forces. It was already known that the fuel exploded in mid-air, and trajectory/direction of fragmentation could be a critically significant bit of scientific information to metallurgists evaluating material deformation and fracture processes. I would like to reiterate that neither of the two current examiners at this site were the source of the interagency and intercontinental conflict. This anecdote is offerred to indicate the strength of beliefs currently existing as a result of the intradiscipline training used for bomb techs, with no or little interdiscipline input.

It is my belief that the very warm (cordial) state of affairs and cooperation now existing among the agencies, as well as with the British representative, is in significant part due to the deference with which scientists generally interact. They discuss the merits of issues on scientific grounds with specific terminology to describe specific scientific behavior. The British representative [Rex Parkinson, BSc (Eng.),CEng,MRAcS, Senior Inspector of Air Accidents (Engineering)] has indicated that in their structure, their investigators must have 4 years minimum working experience in the aircraft industry before they can even apply to the AAIB and, after acceptance, are required to attend approximately 30 days of metallurgical classes. He stated that they are not allowed to "pronounce" the cause of metal damage or deformation but rather select objects or items to present to the metallurgists *who are also at the scene.*

The following suggestions of modifications to Laboratory procedure would probably serve to eliminate the sources of conflict inherent in the present structure. Some of them are working so well at this crash reconstruction site that they have actually eliminated the distrust of the early stages. It is hard to imagine how cooperation, trust and comraderie could be improved in the current environment. The Explosives Unit and various bomb squads have been outstanding at selecting questionable, interesting or unusual metal damage for further metallurgical evaluation. A process is in place whereby the bomb techs log and visually

screen items and direct our focus (NTSB metallurgists and I) to specific deformation or damage. After the damage/deformation is examined, the part is cleared for mock-up.

1) Institute a multidisciplinary "go team" similar to that used by NTSB for all suspected or known bomb scene investigations involving aviation disasters. This approach would not generally be necessary if non-bombing disasters are under investigation.

2) Since aircraft and other public/commercial transport disasters, as well as car/building bombs are dynamic interactions of primarily metals, make a materials scientist (materials science, metallurgy, metallurgical engineer) the Principal Examiner or Lead Investigator (as NTSB calls him/her). A plane can fall from the sky for very many reasons; a bomb is only one of them. If a plane crashed and a possibility existed that it was shot down, it would not make sense to send a firearms examiner to the scene (although that was done several administrations ago) because of all the hydraulic lines which can become axially loaded in compression (impact) and cause holes which appear to be bullet holes.

His/her function would be to accept input from all facets of the forensic investigation (explosives, chemical residues, etc.) and be responsible for the final conclusions and reporting. This is particularly appropriate inasmuch as the materials scientist is in the best position to evaluate overall forces, stresses and degradation mechanisms operative, as well as that a materials scientist's focus is not merely on explosive loading mechanisms but also on all other forms of metal damage. One of the problems I have observed with some of the various interests here is the tendency to try to fit the evidence or data to a particular theory or focus of interest (for example, there is a 'missile theory' proponent agency present). That, in my opinion, is quite healthy in that it stimulates scientific awareness and they have been very helpful in directing my attention to specific missile material specifications and behavior. However, the overall responsibility for a final report and conclusions should *not* be an examiner with a narrowed focus (such as explosive or missile representative). It has a tendency to predispose a bias on a disaster investigation when the cause may well be determined to be fatigue, a mechanical problem resulting in overstress failure(s), a malfunctioning system component or a myriad of other possibilities.

Another benefit would be derived from maintaining an independent reporting to the chain of command. I have seen that when SAC's, Assistant Directors and other officials arrive on scene for briefings, or even in the Laboratory environment, they are briefed by the "special interest" examiner and almost never seek input from any other technical source. In the near hysteria surrounding such a catastrophe, I believe that the bias toward sabotage is due in part to the special focus which assuredly is the primary proportion of the discussion between the special interest and the official. In the past (e.g., UNABOM), time consuming and useless examinations were directed from above because of the nonscientific input to the Assistant Director indicating such an exam was needed or wanted.

Explosive examiners and/or bomb techs provide a valuable function in bomb component recognition and in crime scene processing. This suggestion would also obviate a need to make explosive examiners metallurgists.

3) If the examiner is not a materials scientist, incorporate metallurgical *awareness* instruction into the training program, preferrably *forensic* metallurgical input. The latter emphasis is suggested because the average industry or academic metallurgist does not have air crash or high strain rate experience.

4) Restrict explosive examiner conclusions, pronouncements, findings, statements of material damage, etc., only to recognizable bomb components, not to whether or not material was subjected to blast damage or how a material may have become deformed or damaged.

5) Monitor courtroom testimonies by random transcript review.

Again, I can't too strongly emphasize how well the multidiscipline approach, incorporating [informal and mostly unrecognized] metallurgical instruction, has been working here in Center Mariches, NY, for the TWA 800 investigation. Although I am probably aware of only a minute portion of the thrust of the commission's investigation, my concern in generating this memo is to suggest that prior statements, inaccurate conclusions and/or testimonies of members of EU be viewed possibly as by-products of training or structure inadequacies rather than of criminal intent.

MEMO

To: Tom Jourdan

From: William A. Tobin

Date: Sunday, September 15, 1996

Subject: TWA 800 Update

Tom: FYI and any dissemination you deem appropriate.

As you know or probably suspected, I felt like a salmon swimming upstream the first three weeks of my presence here. In the near-hysteria that existed, my continued urgings of prudence and caution in interpretation of events and data were not well received in some quarters in the light of what was considered obvious and overwhelming "forensic evidence". My repeated judgment that the material damage and deformation was not consistent with blast damage was considered heresy [in the law enforcement community], particularly in view of the results of chemical residue analyses.

As part of a "hysteria reduction" effort, I held approximately 5 informal lecture sessions (approximately 30 minutes each) with different bomb squads and agencies, stopped in to Roger Martz's office during my brief return to the office to suggest a more skeptical interpretation of the residue analyses, periodically effected input into the daily investigators meetings to "let the evidence speak for itself" and not to try to force the evidence into a particular theory, and diplomatically inquired of Jim Kallstrom as to the federal statutes regarding material and/or testing deficiencies on components of commercial carriers which threaten the public safety.

It appears that the efforts, patience and diplomacy are beginning to bear fruit. The "bomb/missile" hysteria in the law enforcement community is beginning to wane. So effective have the education sessions been (with very appreciative feedback from all police bomb tech agencies, per Det. Sgt. Joseph Cordero) that some of the very individuals who were quite aggressive in their insistence that it had to be a bomb are now stating, "...I thought it was mechanical failure all along..."!

The Structures Group of NTSB has requested an urgent confab of [financially disinterested] metallurgists and structures technical personnel only (Tuesday afternoon) to formulate the probable sequence and nature of the stresses responsible for the breakup of the critical stages of fuel tank region and surrounding structure. On

Wednesday, our findings will be made known to all parties (including Boeing, TWA, ALPA, FAA, FBI Bomb Techs, etc) with a walk-through briefing, with any challenges entertained at that time. At the end of the walk-through, it is anticipated that the parties will sign off on our conclusions for inclusion into their respective reports. ["Signing off" does not mean they agree; only that they have been given the opportunity to hear, discuss, and either agree with or contest our findings].

If you haven't already guessed by now, my early expectation based on the data at that time (approximately 40% of the aircraft), and a subtlety driving the 'off the record' probability statement of an earlier update I provided, is beginning to gel here. As more parts arrive from the recovery operation, metallurgical examinations and mock-up are tending to corroborate the mechanical failure scenario. I would estimate that ~70% or slightly more of the aircraft has been recovered.

Regrettably delaying the chemistry unit operations, NTSB and I have requested any additional material [residue] removal (i.e., swabbing) from the critical center tank and surrounding structural components, be deferred in the light of the very important deliberations scheduled for Tuesday and Wednesday.

Although I have dropped both diplomatic and humorous hints regarding the need for legal guidance from the NYO Division, none has been forthcoming. Inasmuch as the last time I brought the subject up it was brusquely indicated to me that mechanical failure was not possible, I have opted to continue to function as I have, with no recorded workproduct, and providing metallurgical oversight and guidance to represent the interests of the FBI.

I hope this update has been helpful in relating our [MAU's] activities associated with the TWA 800 investigation here in Calverton, NY, as well as the tenor, progress and direction of the overall investigation.

Bill

MEMO

To: Thomas H. Jourdan

From: William A. Tobin

Date: Monday, November 4, 1996

G Subject: [redacted]

Re your memo 10/31/96

There is missing chronology as set forth in referenced memo that I would like to supplement. On or about 10/24/96, I called the contributor, [redacted] to indicate the specimen listing error and asked how the prosecutor would like the correction handled. His return call indicated that they would like an amended report inasmuch as they had already provided it to defense counsel for discovery, and he
G suggested the wording which I redictated on/about 10/25/95 as indicated in your memo.

[redacted] had indicated they needed the conclusions ASAP otherwise the prosecutor would not be able to use them, and we had promised him the report by noon on/about 10/23/96. We were several hours late when the report was ready. You were not present that day. Chris Fiedler was likewise not available, and Roger Martz had already signed the dictation out and even had a second opportunity to view the dictation when I presented it for grammatical correction.

In view of (1) the urgency of the request, (2) that Martz had two opportunities to review his examiner's work, and (3) given the appearance of "having it in" for Ms. Knuckles after I wrote up the courtroom testimony review I was requested to complete, I was not about to look for more trouble. Given the resistence of Roger Martz to the courtroom testimony review of his examiner, I kept a "hands off" approach when reviewing the dictation. I only scanned the dictation to insure consistency with my findings.

As long as you are indicating annoyance, I will reciprocate. At some point in FBI Laboratory operations, we have to presume some competence on the part of fellow Laboratory examiners and on the part of managers who review the work of their examiners (twice, no less), particularly in the urgency indicated by the contributor and with no managers present (other than the one who reviewed the dictation twice).

I would also like to indicate that the Office of Inspector General's Commission has suggested that the previous dictation difficulty I had with the Explosives Unit (wherein I attempted to deal with it diplomatically by wording my conclusions to merge with the pre-existing Explosives report) was handled inappropriately. They specifically indicated to me via interview that their understanding of DOJ or FBI regulations requires that an amended report be issued to correct any inaccuracies in an issued report.

I do not want to find myself a year or more from now defending why I did not cause an amended report to be issued, or even at trial, where it appears I took [redacted] in each of two specimens to Ms. Knuckles for examination, was returned [redacted] in each of two specimens, and then present testimony on [redacted] respectively, that had to have originated from each other. In this era of "evidence planting" accusations following the O. J. Simpson trial and in a trial from which I recently returned where the exact insinuations were repeatedly made, an amended report is, in my opinion, the most prudent option.

If it is yours and Roger Martz's decision not to issue an amended report, I will respect your decision. However, I would document by memo to the file why I did not issue an amended report as the principal examiner.

Memorandum

To: *Thomas H. Jourdan*
From: *William A. Tobin*
Date: *04/24/1997*
Subject: *TWA 800 Metallurgical Conclusions*

PURPOSE: To provide overall metallurgical observations consistent with FBI jurisdiction regarding material behavior issues associated with the Boeing 747-100 aircraft designated flight TWA 800.

RECOMMENDATION: None. For information only.

DETAILS: As of the date of this communication, and after viewing the more complete reconstruction of the monocoque and related components, there has been no substantive change to the metallurgical observations and conclusions rendered in Fall 1996. There is still no observed material response indicative or suggestive of criminal behavior. Consistent with FBI mandate, no observations or conclusions have been rendered by the FBI Metallurgy Group as to the cause of the disaster, as that is the province of the National Transportation Safety Board.

It is additionally noted that, with regard to peer review, minimally nine metallurgists, four of whom have a significant vicarious financial interest supportive of the finding of either a bomb or missile, have *officially* [as parties to the investigation] examined the aircraft components and have rendered a similar conclusion. There apparently has also been a number of scientists not parties to the investigation who have examined aircraft damage at the invitation of the NYO and who also do not conclude bomb, missile, or any criminal activity associated with damage to the aircraft.

MEMO

To: Dr. Randall S. Murch

From: William A. Tobin

Date: Friday, May 30, 1997

Subject: TWA 800 Update

Synopsis: Alcoa associated contractor is under satisfactory direction regarding TWA 800 contract for a period of weeks. Upper level managerial advice and/or control may be required for future tasking. Phase III aircraft testing is to be sponsored and funded by NTSB and they will be extending invitations for technical personnel attendance.

Details: Because no reasonable project could be devised or assigned by the FBI or NTSB technical personnel specified in the contract as directing the contractor, I have relinquished specific direction to NYO in an effort to insure their satisfaction and to eliminate the perception of "steering" (a reference made by SSA Maxwell).

Discussion with SSA Ken Maxwell has revealed an intransigent position as to agency missions that I consider untenable and at apparent odds with statutory guidelines, and with assurances I provided to the Legal Division in order to free up the $100,000 for funding the peer review. SSA Maxwell has adamantly and repeatedly maintained that the "...FBI still has not determined the specific cause for this crash...", and that the Alcoa liaison contractor will be tasked by NYO to examine any and all components for mechanical failure issues as well as bomb or missile damage because of the "possibility" of a criminal act causing the mechanical failure.

I indicated this was at odds with my assurances to the Legal Division, and that we would probably need higher authority to fund peer review of mechanical failure issues. By the "possibility of criminal act" criterion, the FBI should investigate every air, rail and maritime accident occurring within the U. S. This clearly contravenes what I believed to be established precepts of agency mission.

1 - Dr. T. H. Jourdan

In addition, it is one thing to have an outside contractor *unofficially* review or critique the work of another agency with whom we frequently and closely work, and quite another to actually *fund* "peer review" of that agency's mission-oriented workproduct. That would be analogous to NTSB seeking, *and funding*, a "peer review" to critique FBI Laboratory findings.

At present, due to the mutually agreeable (NYO, NTSB and FBI Laboratory) project I assigned to the contractor regarding the presence of "spike" failures (a phenomenon I have projected to be related in part to higher strain rates, projectile geometry, and projectile orientation), the contractor will be gainfully occupied for a period of man-weeks. However, it is possible that higher level oversight or advice may be required during the next level of metallurgical tasking. You will be kept advised of developments and of the contractor deliverables.

On another note, I was invited to sit in on a meeting with the Director of Aviation Safety (Bernie Loeb) conference with the technical personnel planning Phase III of the aircraft testing scheduled to occur in England on or about July 26 to Aug. 8. This phase is directed, hosted, and funded by NTSB, and they will be extending an invitation for a specified number of FBI Laboratory personnel to attend. I will discuss details of the planned tests and data ramifications with Dr. Jourdan.

Recommendations: None. For information only.

Memorandum

To: *Thomas H. Jourdan*
From: *William A. Tobin*
Date: *07/15/1997*
Subject: *Metallurgical Status Report: TWA 800*

The last FBI metallurgical examinations or evaluations conducted of any significance, relating to damaged TWA 800 components, were in approximately October 1996.

As directed by you, on January 1, 1997, I elicited a commitment for the services of a retired research scientist and metallographic laboratory specializing in the aluminum alloys primarily comprising the Boeing 747-100. Since May 1997, the scientist has been researching the location, morphology, and formation fracture mechanics of small holes with "spike tooth" fractures, the only metallurgically significant indicator present of a high strain rate. However, the holes are relatively small (none of which could reasonably have been responsible for "instantaneous" cessation of the recorders), exhibit no apparent preferred concentration, exhibit no apparent isotropy, and are in matrices which exhibit no characteristics of impulsive loading or proximity to explosive (ordnance) materials. The scientist has observed no indication of bomb or missile damage, and brings to ten the number of metallurgists officially examining and pronouncing the absence of bomb or missile damage, 4 from NTSB, 3 from Boeing, 2 from the FBI Laboratory, and one scientist consultant. It is noted that three of the aforementioned metallurgists could be considered to have a strong organizational interest in the finding that something other than mechanical failure initiated the catastrophic sequence of events.

The "spike tooth" failures, known to both NTSB and I from other incidents to be the result of high velocity contacts from damaged aircraft components, have recently been duplicated in empirical tests conducted by NTSB where metal pieces were brought in contact with the aircraft skin at strain rates already known to be available from the forward velocity of the passenger jet and velocities associated with free fall from 13,800 feet. In view of these observations, therefore, it is unreasonable to expect the "spike tooth" failures will be related to any criminal behavior which could have caused the disaster.

1 - Dr. Michael Smith (Rm. 3346)

Memo

To: *Bob Sibert*
From: *William A. Tobin*
Date: *August 12, 1997*
Re: *Requested TWA 800 Update*

Per your request of August 11, 1997:

- There has been no pending FBI Laboratory metallurgical interest in TWA 800 since approximately October, 1996. The only activity "left to be done" was the managerially directed outside metallurgist "peer review" of Dr. Barrie Shabel. If it is still directed that the project is to continue, in my view *it should not be a rate determining indicator or justification for FBI presence.* The project can be continued after FBI pullout in that it is highly improbable that any surprises will result from the study relating to direct cause of the crash.

- The only report anticipated from the Metallurgy Group regarding the missile tests in Britain, or any explosives tests, would have been of any remarkable characteristics or material behavior suggesting any similarities with characteristics exhibited by the components in Calverton, N.Y. There were none.

- As for the testing in England, the general materials behavior characteristics exhibited as a result of propane testing in the center tank are consistent with the types of damage present in Calverton. Mike's overall evaluation of these test results were that they were even more severe than is evident in the Calverton components.

- Mike made no contacts with any forensic metallurgists during his trip to England. The only contact Mike has had with what would be the closest discipline to a forensic metallurgist was with my contact, the NTSB Chief Metallurgist, Michael Marx, and with one of his metallurgists, Jim Wildey, who were both present in England.

1 - Dr. T. H. Jourdan
1 - Dr. Randall S. Murch

1. ME's office -- lacked organization and failed to establish chain of custody on clothing and particulate matter taken from ME staff. Didn't decontaminate for weeks then cross contaminated same at Calverton.

2. Stowed blood-soaked passenger and crew clothing in refrigerator trailer contrary to universally accepted forensic procedure. Two months into the investigation the refrigerator trailer's refrigeration unit ran out of fuel and the contents of the trailer baked in 90 degree temperatures for 2 1/2 days until the trailer was refueled and the refrigerator unit restarted. This resulted in mold cultures growing in the clothing and other potential evidence which had been stored in the trailer.

3. Took seat covers off without documenting where they came from.

4. Didn't x-ray seats in an organized manner. Missed several rows of seats.

5. Chemical swabbing wasn't done on an on-going basis.

6. Parts were taken from the interior hangar by the FBI without on-scene FBI or NTSB staff being consulted or advised as to what was taken. After NTSB complaint was lodged, FBI security caught two FBI agents in interior hangar in the early morning hours. FBI installed security cameras and the problem was eliminated.

7. West Coast agent attempted to flatten pieces of wreckage.

8. Bomb techs did not document evidence in accordance with accepted procedures.

9. ERT qualification in basic forensics very limited. Only ~~two~~ 4 of the ERTs were trained.

10. FBI declined to provide representation on investigative groups.

11. Treatment of ATF was unprofessional. Didn't use them.

12. Lack of biohazard training and improper use of equipment. Wouldn't let their people use NTSB equipment.

13. Apparent lack of coordination between FBI bomb tech, lab, and agents assigned to investigation.

14. Agents stuck knives and screw into seat back which destroyed any chance of trajectory analysis.

15. FBI took charge of victim recovery but failed to use GPS fixes to verify recovery location.

16. An FBI agent, not associated with the activities in Calverton, brought an unauthorized psychic into the hangar in September.

*** NOTE: THIS DOCUMENT IS CURRENT THOUGH APRIL 20, 1998 ***

UNITED STATES CODE, TITLE 49

CHAPTER 11--NATIONAL TRANSPORTATION SAFETY BOARD

SUBCHAPTER I--GENERAL

§ 1101. Definitions.

SUBCHAPTER II--ORGANIZATION AND ADMINISTRATIVE

§ 1111. General organization.
§ 1112. Special boards of inquiry on air transportation safety.
§ 1113. Administrative.
§ 1114. Disclosure, availability, and use of information.
§ 1115. Training.
§ 1116. Reports and studies.
§ 1117. Annual report.
§ 1118. Authorization of appropriations.
§ 1119. Accident and safety data classification and publication.

SUBCHAPTER III--AUTHORITY

§ 1131. General authority.
§ 1132. Civil aircraft accident investigations.
§ 1133. Review of other agency action.
§ 1134. Inspections and autopsies.
§ 1135. Secretary of Transportation's responses to safety recommendations.
§ 1136. Assistance to families of passengers involved in aircraft accidents.

SUBCHAPTER IV--ENFORCEMENT AND PENALTIES

§ 1151. Aviation enforcement.
§ 1152. Joinder and intervention in aviation proceedings.
§ 1153. Judicial review.
§ 1154. Discovery and use of cockpit voice and other material.
§ 1155. Aviation penalties.

SUBCHAPTER I--GENERAL

§ 1101. Definitions

Section 40102(a) of this title applies to this chapter.

SUBCHAPTER II--ORGANIZATION AND ADMINISTRATIVE

§ 1111. General organization

(a) ORGANIZATION.--The National Transportation Safety Board is an independent establishment of the United States Government.

(b) APPOINTMENT OF MEMBERS.--The Board is composed of 5 members appointed by the President, by and with the advice and consent of the Senate. Not more than 3 members may be appointed from the same political party. At least 3 members shall be appointed on the basis of technical qualification, professional standing, and demonstrated knowledge in accident reconstruction, safety engineering, human factors, transportation safety, or transportation regulation.

(c) TERMS OF OFFICE AND REMOVAL.--The term of office of each member is 5 years. An individual appointed to fill a vacancy occurring before the expiration of the term for which the predecessor of that individual was appointed, is appointed for the remainder of that term. When the term of office of a member ends, the member may continue to serve until a successor is appointed and qualified. The President may remove a member for inefficiency, neglect of duty, or malfeasance in office.

(d) CHAIRMAN AND VICE CHAIRMAN.--The President shall designate, by and with the advice and consent of the Senate, a Chairman of the Board. The President also shall designate a Vice Chairman of the Board. The terms of office of both the Chairman and Vice Chairman are 2 years. When the Chairman is absent or unable to serve or when the position of Chairman is vacant, the Vice Chairman acts as Chairman.

(e) DUTIES AND POWERS OF CHAIRMAN.--The Chairman is the chief executive and administrative officer of the Board. Subject to the general policies and decisions of the Board, the Chairman shall--

(1) appoint, supervise, and fix the pay of officers and employees necessary to carry out this chapter;

(2) distribute business among the officers, employees, and administrative units of the Board; and

(3) supervise the expenditures of the Board.

(f) QUORUM.--Three members of the Board are a quorum in carrying out duties and powers of the Board.

(g) OFFICES, BUREAUS, AND DIVISIONS.--The Board shall establish offices necessary to carry out this chapter, including an office to investigate and report on the safe transportation of hazardous material. The Board shall establish distinct and appropriately staffed bureaus, divisions, or offices to investigate and report on accidents involving each of the following modes of transportation:

(1) aviation.

(2) highway and motor vehicle.

(3) rail and tracked vehicle.

(4) pipeline.

(h) SEAL.--The Board shall have a seal that shall be judicially recognized.

§ 1112. Special boards of inquiry on air transportation safety

(a) ESTABLISHMENT.--If an accident involves a substantial question about public safety in air transportation, the National Transportation Safety Board may establish a special board of inquiry composed of--

(1) one member of the Board acting as chairman; and

(2) 2 members representing the public, appointed by the President on notification of the establishment of the special board of inquiry.

(b) QUALIFICATIONS AND CONFLICTS OF INTEREST.--The public members of a special board of inquiry must be qualified by training and experience to participate in the inquiry and may not have a pecuniary interest in an aviation enterprise involved in the accident to be investigated.

(c) AUTHORITY.--A special board of inquiry has the same authority that the Board has under this chapter.

§ 1113. Administrative

(a) GENERAL AUTHORITY.--(1) The National Transportation Safety Board, and when authorized by it, a member of the Board, an administrative law judge employed by or assigned to the Board, or an officer or employee designated by the Chairman of the Board, may conduct hearings to carry out this chapter, administer oaths, and require, by subpoena or otherwise, necessary witnesses and evidence.

(2) A witness or evidence in a hearing under paragraph (1) of this subsection may be summoned or required to be produced from any place in the United States to the designated place of the hearing. A witness summoned under this subsection is entitled to the same fee and mileage the witness would have been paid in a court of the United States.

(3) A subpoena shall be issued under the signature of the Chairman or the Chairman's delegate but may be served by any person designated by the Chairman.

(4) If a person disobeys a subpoena, order, or inspection notice of the Board, the Board may bring a civil action in a district court of the United States to enforce the subpoena, order, or notice. An action under this paragraph may be brought in the judicial district in which the

(C) a railroad accident in which there is a fatality or substantial property damage, or that involves a passenger train;

(D) a pipeline accident in which there is a fatality, substantial property damage, or significant injury to the environment;

(E) a major marine casualty (except a casualty involving only public vessels) occurring on the navigable waters or territorial sea of the United States, or involving a vessel of the United States, under regulations prescribed jointly by the Board and the head of the department in which the Coast Guard is operating; and

(F) any other accident related to the transportation of individuals or property when the Board decides--

(i) the accident is catastrophic;

(ii) the accident involves problems of a recurring character; or

(iii) the investigation of the accident would carry out this chapter.

(2) An investigation by the Board under paragraph (1)(A)-(D) or (F) of this subsection has priority over any investigation by another department, agency, or instrumentality of the United States Government. The Board shall provide for appropriate participation by other departments, agencies, or instrumentalities in the investigation. However, those departments, agencies, or instrumentalities may not participate in the decision of the Board about the probable cause of the accident.

(3) This section and sections 1113, 1116(b), 1133, and 1134(a) and (c)-(e) of this title do not affect the authority of another department, agency, or instrumentality of the Government to investigate an accident under applicable law or to obtain information directly from the parties involved in, and witnesses to, the accident. The Board and other departments, agencies, and instrumentalities shall ensure that appropriate information developed about the accident is exchanged in a timely manner.

(b) ACCIDENTS INVOLVING PUBLIC VESSELS.--(1) The Board or the head of the department in which the Coast Guard is operating shall investigate and establish the facts, circumstances, and cause or probable cause of a marine accident involving a public vessel and any other vessel. The results of the investigation shall be made available to the public.

(2) Paragraph (1) of this subsection and subsection (a)(1)(E) of this section do not affect the responsibility, under another law of the United States, of the head of the department in which the Coast Guard is operating.

(c) ACCIDENTS NOT INVOLVING GOVERNMENT MISFEASANCE OR NONFEASANCE.--(1) When asked by the Board, the Secretary of Transportation may--

(A) investigate an accident described under subsection (a) or (b) of this section in which misfeasance or nonfeasance by the Government has not been alleged; and

(B) report the facts and circumstances of the accident to the Board.

(2) The Board shall use the report in establishing cause or probable cause of an accident described under subsection (a) or (b) of this section.

(d) ACCIDENTS INVOLVING PUBLIC AIRCRAFT.--The Board, in furtherance of its investigative duties with respect to public aircraft accidents under subsection (a)(1)(A) of this section, shall have the same duties and powers as are specified for civil aircraft accidents under sections 1132(a), 1132(b), and 1134(b)(2) of this title.

(e) ACCIDENT REPORTS.--The Board shall report on the facts and circumstances of each accident investigated by it under subsection (a) or (b) of this section. The Board shall make each report available to the public at reasonable cost.

§ 1132. Civil aircraft accident investigations

(a) GENERAL AUTHORITY.--(1) The National Transportation Safety Board shall investigate--

(A) each accident involving civil aircraft; and

(B) with the participation of appropriate military authorities, each accident involving both military and civil aircraft.

(2) A person employed under section 1113(b)(1) of this title that is conducting an investigation or hearing about an aircraft accident has the same authority to conduct the investigation or hearing as the Board.

(b) NOTIFICATION AND REPORTING.--The Board shall prescribe regulations governing the notification and reporting of accidents involving civil aircraft.

(c) PARTICIPATION OF SECRETARY.--The Board sha provide for the participation of the Secretary of Transportation in the investigation of an aircraft accident under this chapter when pa icipation is necessary to carry out the duties and powers of the Secretary. However, the Secretary may not participate in establishing prob ble cause.

(d) ACCIDENTS INVOLVING ONLY MILITARY AIRCRAFT.--If an accident involves only military aircraft and a duty of the Secretary is or may be involved, the military authorities shall provide for the participation of the Secretary. In any other accident involving only military aircraft, the military authorities shall give the Board or Secretary information the military authorities decide would contribute to the promotion of air safety.

§ 1133. Review of other agency action

The National Transportation Safety Board shall review on appeal--

(1) the denial, amendment, modification, suspension, or revocation of a certificate issued by the Secretary of Transportation under section 44703, 44709, or 44710 of this title;

(2) the revocation of a certificate of registration under section 44106 of this title;

(3) a decision of the head of the department in which the Coast Guard is operating on an appeal from the decision of an administrative law judge denying, revoking, or suspending a license, certificate, document, or register in a proceeding under section 6101, 6301, or 7503, chapter 77, or section 9303 of title 46; and

(4) under section 46301(d)(5) of this title, an order imposing a penalty under section 46301.

§ 1134. Inspections and autopsies

(a) ENTRY AND INSPECTION.--An officer or employee of the National Transportation Safety Board--

(1) on display of appropriate credentials and written notice of inspection authority, may enter property where a transportation accident has occurred or wreckage from the accident is located and do anything necessary to conduct an investigation; and

(2) during reasonable hours, may inspect any record, process, control, or facility related to an accident investigation under this chapter.

(b) INSPECTION, TESTING, PRESERVATION, AND MOVING OF AIRCRAFT AND PARTS.--(1) In investigating an aircraft accident under this chapter, the Board may inspect and test, to the extent necessary, any civil aircraft, aircraft engine, propeller, appliance, or property on an aircraft involved in an accident in air commerce.

(2) Any civil aircraft, aircraft engine, propeller, appliance, or property on an aircraft involved in an accident in air commerce shall be preserved, and may be moved, only as provided by regulations of the Board.

(c) AVOIDING UNNECESSARY INTERFERENCE AND PRESERVING EVIDENCE.--In carrying out subsection (a)(1) of this section, an officer or employee may examine or test any vehicle, vessel, rolling stock, track, or pipeline component. The examination or test shall be conducted in a way that--

(1) does not interfere unnecessarily with transportation services provided by the owner or operator of the vehicle, vessel, rolling stock, track, or pipeline component; and

(2) to the maximum extent feasible, preserves evidence related to the accident, consistent with the needs of the investigation and with the cooperation of that owner or operator.

(d) EXCLUSIVE AUTHORITY OF BOARD.--Only the Board has the authority to decide on the way in which testing under this section will be conducted, including decisions on the person that will conduct the test, the type of test that will be conducted, and any individual who will witness the test. Those decisions are committed to the discretion of the Board. The Board shall make any of those decisions based on the needs of the investigation being conducted and, when applicable, subsections (a), (c), and (e) of this section.

(e) PROMPTNESS OF TESTS AND AVAILABILITY OF RESULTS.--An inspection, examination, or test under subsection (a) or (c) of this section shall be started and completed promptly, and the results shall be made available.

(f) AUTOPSIES.--(1) The Board may order an autopsy to be performed and have other tests made when necessary to investigate an accident under this chapter. However, local law protecting religious beliefs related to autopsies shall be observed to the extent consistent with the needs of the accident investigation.

(2) With or without reimbursement, the Board may obtain a copy of an autopsy report performed by a State or local official on an individual who died because of a transportation accident investigated by the Board under this chapter.

GAO

United States
General Accounting Office
Washington, D.C. 20548

Office of Special Investigations

B-282979

August 13, 1999

The Honorable Charles E. Grassley
Chairman, Subcommittee on Administrative Oversight
and the Courts
Committee on the Judiciary
United States Senate

Subject: FBI: Delivery of ATF Report on TWA Flight 800 Crash

Dear Mr. Chairman:

As you requested, we have enclosed a copy of our June 29, 1999, briefing before the Subcommittee on Administrative Oversight and the Courts. This briefing was in response to your request for information about a January 20, 1997, Bureau of Alcohol, Tobacco and Firearms (ATF) report on the crash of Trans World Airlines, Inc. (TWA) flight 800. That information concerned whether the Federal Bureau of Investigation (FBI) had forwarded the ATF report to the National Transportation Safety Board (NTSB), as the FBI claimed in written and oral testimony before the Subcommittee in May 1999.

Our investigation revealed that the NTSB has no record of receiving the ATF report from the FBI. FBI officials stated that although they believed the ATF report was forwarded to the NTSB, it was possible that the report may not have been sent due to administrative error. Officials of the FBI stated that during the TWA flight 800 case, the FBI determined what information would be disseminated to the NTSB and when it would be disseminated.

We will make copies of this letter available to others on request. If you have any questions, please contact Assistant Director Ron Malfi at (202) 512-6722.

Sincerely yours,

Robert H. Hast
Acting Assistant Comptroller General
for Special Investigations

Enclosure

Enclosure I

BRIEFING PAPER
ATF Report on the Cause of the Crash of TWA Flight 800

For the Subcommittee on Administrative Oversight and the Courts, Senate Committee on the Judiciary

- **QUESTION**

Did the Federal Bureau of Investigation (FBI) forward to the National Transportation Safety Board (NTSB) a January 20, 1997, Bureau of Alcohol, Tobacco and Firearms (ATF) report on the crash of Trans World Airlines, Inc. (TWA) flight 800, as the FBI claimed in written and oral testimony before the Subcommittee?

- **BACKGROUND**

Central to a May 10, 1999, hearing before the Subcommittee was a January 20, 1997, ATF report. That report concludes that the mechanical failure of the aircraft's center wing fuel tank was the likely cause of the explosion that brought down Trans World Airlines, Inc. (TWA) flight 800. At the hearing ATF Assistant Director Andrew Vita testified that he had ordered the Special Agent-in-Charge of ATF's New York Office to deliver the report to the FBI and, in the interest of public safety, to NTSB. On March 13, 1997, when ATF first attempted to deliver the report, the then Assistant Director-in-Charge (ADIC) James Kallstrom of the FBI's New York Office refused to accept it. Subsequently, ADIC Kallstrom reluctantly received the report, but told ATF he did not want the report delivered to NTSB.

The Subcommittee determined that ADIC Kallstrom contacted Raymond Kelly, then Under Secretary for Enforcement, Department of the Treasury, regarding the ATF report. Under Secretary Kelly ordered ATF Director John Magaw not to deliver the report to NTSB. NTSB officials informed the Subcommittee that they never received an official copy of the report from the FBI.

Also at the May 10, 1999, hearing, Lewis Schiliro, the current ADIC of the FBI's New York Office, produced a March 17, 1997, unsigned "transmittal letter" from ADIC Kallstrom to NTSB Chairman James Hall as proof that the report had been delivered to NTSB. ADIC Schiliro dismissed as "ludicrous" suggestions that the FBI did not deliver the ATF report to NTSB.

- **SUMMARY OF SIGNIFICANT FINDINGS**

National Transportation Safety Board

Our investigation revealed that NTSB has no record of receiving the ATF report from the FBI. Senior NTSB officials involved in the TWA flight 800 crash investigation are certain they never received the ATF report, formally or informally, from the FBI. NTSB did receive an unofficial or "bootleg" copy of the report from ATF. However, because this was not an official copy of the report, NTSB was not able to refer to it in any of its public statements or public documents. Hence, NTSB was not able to use it to help convince the Federal Aviation Administration to force the airline industry to act faster to implement safety recommendations concerning the center wing fuel tank on Boeing 747 aircraft.

Senior NTSB officials believe the FBI "rolled over" NTSB during the TWA flight 800 case. According to Chairman James Hall, the NTSB should have been in charge of the case since no evidence of a criminal act was developed. However, unlike normal aviation accident investigations, the FBI took charge of the TWA flight 800 case to the detriment of NTSB. Chairman Hall stated that a number of factors caused NTSB to lose control, including the strong personality of FBI ADIC James Kallstrom and the weak personalities of the NTSB officials at the scene of the crash. The FBI withheld critical information from NTSB, such as a Central Intelligence Agency report. That report concluded that a missile did not cause TWA flight 800 to crash.

Bureau of Alcohol, Tobacco and Firearms

ATF Director John Magaw and Assistant Director Andrew Vita informed us that the agents who prepared the ATF report are certified fire investigators. These agents, who worked closely with FBI and NTSB personnel at the crash site on Long Island, believed that the report raised safety concerns about Boeing 747 aircraft. They disagreed, but complied, with Under Secretary Kelly's decision to order ATF to deliver the report only to the FBI.

Department of the Treasury

Former Under Secretary Raymond Kelly said he ordered ATF to deliver the report only to the FBI based on a request made by ADIC Kallstrom, a longtime friend. Under Secretary Kelly stated that the FBI should have been the disseminator of the ATF report because the FBI was the lead investigative agency. He stated that he believed that the FBI would forward a copy of the report to NTSB.

Department of Justice

The two Assistant U.S. Attorneys assigned to work the TWA flight 800 case in the Eastern District of New York had no recollection of the ATF report. No record of the report could be located in the TWA flight 800 case files at the U.S. Attorney's Office.

Federal Bureau of Investigation

The FBI cooperated with our investigation and afforded us access to its records and personnel. We reviewed the official FBI files for the TWA flight 800 case at FBI Headquarters in Washington, DC, and at its New York Office.

We found no copies of the ATF report or the teletype (also known as an Electronic Communication or "EC") from ADIC Kallstrom to the FBI Director in the FBI Headquarters case file. We were informed that these documents should have been located in the file. (One month after our visit, we were informed that the missing documents had been located in the workpapers of a supervisor at FBI Headquarters.)

In the New York Office file, we found (1) the unsigned transmittal letter from ADIC Kallstrom to Chairman Hall dated March 17, ~~1999,~~ 1997, (2) an EC from ADIC Kallstrom to the FBI Director dated March 14, 1997, and (3) an ATF report dated January 20, 1997. We examined the unsigned transmittal letter and determined it was an "original" document that is suitable for signature. A FBI official told us that it was possible that this unsigned letter was actually the original that somehow had not been signed by ADIC Kallstrom and then placed in the file by mistake. He added that this scenario could explain why NTSB never received the ATF report.

Retired ADIC Kallstrom and current ADIC Lewis Schiliro stated to us that they believe the ATF report was sent to NTSB. However, both also said that it was possible but unlikely that the ATF report had not been sent to NTSB and somehow "fell through the cracks." In addition, both stated that during the TWA flight 800 case, the FBI determined what information would be disseminated to NTSB and when it would be disseminated. The FBI was concerned about sharing classified or sensitive information with NTSB, especially because of the "party system" used by NTSB in accident investigations. Both ADIC Kallstrom and ADIC Schiliro told us they believe the party system had a built-in conflict-of-interest concern.

SCOPE AND METHODOLOGY

We conducted our investigation from May 17, 1999, to July 8, 1999. We reviewed relevant documents and interviewed knowledgeable representatives of the Department of the Treasury, Department of Justice, NTSB, ATF, and FBI.

(600550)

United States General Accounting Office
Washington, DC 20548

Office of Special Investigations

B-283640

November 3, 1999

The Honorable Charles E. Grassley
Chairman
Subcommittee on Administrative Oversight and the Courts
Committee on the Judiciary
United States Senate

Subject: Transportation Safety: Information Concerning Why a 1980 Aircraft Report Was Not Provided Earlier to the National Transportation Safety Board

Dear Mr. Chairman:

In connection with your ongoing concerns about the July 1996 TWA flight 800 crash of a Boeing 747 aircraft, you asked us to determine why a Boeing report entitled *Center Wing Fuel Tank Heating Study* (also referred to as the *Panama Study*) dated March 14, 1980, was not provided to the National Transportation Safety Board (NTSB) until June 1999. To develop this information, we reviewed relevant documents and interviewed knowledgeable representatives of NTSB, Boeing Commercial Airplane Group, Boeing Military Group, and U.S. Air Force Oklahoma City Air Logistics Command (Air Force OC-ALC). We conducted our investigation from August 30, 1999, to October 28, 1999, in Washington, DC; Seattle, Washington; and Oklahoma City, Oklahoma.

The following sections present the information we obtained on why the 1980 *Panama Study* was prepared; attempts by NTSB during the crash investigation to obtain relevant information that Boeing possessed; how and when the study finally surfaced; and views of Boeing, the Air Force and NTSB on the relevance of the study to the TWA flight 800 crash.

1980 *Panama Study*

Because the Air Force was experiencing problems with the center wing fuel tanks overheating in the Boeing E-4B aircraft, the military version of the Boeing 747, it contracted with Boeing to conduct a study to determine the cause of the problem and recommend solutions. Boeing's Military Group conducted the study and issued a report to the Air Force in 1980. The study concluded that under certain circumstances, the air conditioning wiring that ran through the fuel tank could create a potential safety problem. The *Panama Study*–named for the country in

which it was conducted–did not recommend changes to the E-4B aircraft; instead, it recommended taking mitigating actions to address the problem, such as flying the aircraft with one of its tanks–the center wing fuel tank–empty.

Investigation of TWA Flight 800 Crash

NTSB, among other government entities, was involved in the investigation of the TWA flight 800 crash. As a party to the investigation, Boeing assigned technical experts on the design and construction of the aircraft from its Commercial Airplane Group to work full-time with NTSB.

The NTSB Chairman and Director of Aviation Safety told us that as part of its investigation, Boeing was requested to search its database for any information concerning heating problems with the center wing fuel tanks. Both NTSB and Boeing officials told us that at that time the Boeing Commercial Airplane Group told NTSB that Boeing had no data on tests conducted on the heat buildup inside the center wing fuel tank of a 747 aircraft. Officials of Boeing's Commercial Airplane Group admitted to us that the *Panama Study* should have been located and turned over to NTSB in 1996, even though the Boeing Military Group prepared it for the Air Force. They stated that human error caused an incomplete search to be made of the Boeing records system for information on heat studies involving center wing fuel tanks.

NTSB's Chairman and Director of Aviation Safety also informed us that during the initial stage of this TWA flight 800 investigation, Boeing officials told them that the temperature inside the center wing fuel tank on the 747 was incapable of rising above a certain level. The Director said that only after tests conducted by both Boeing and NTSB subsequent to the crash caused Boeing to back away from its initial claim. As a result of its investigation of TWA flight 800, NTSB issued safety recommendations to the Federal Aviation Administration (FAA) in December 1996. These safety recommendations concerned potential heat buildup in center wing fuel tanks of 747s. Since the crash, FAA has issued a number of airworthiness directives and in October 1999 issued a Notice of Proposed Rule Making to implement additional safety recommendations concerning center wing fuel tanks of 747s and other aircraft.

Surfacing of the 1980 *Panama Study*

A Boeing Military Group official told us that the *Panama Study* came to the group's attention in December 1997 when a librarian in the Boeing Aerospace Operations Facility (part of the Boeing Military Group) in Midwest City, Oklahoma, discovered the study during a "housecleaning" effort. Because the Boeing Military Group determined that the report was the property of the Air Force, Boeing turned the results over to Air Force OC-ALC.

In 1998, Air Force OC-ALC initiated an Independent Review Team (IRT) to discuss center wing fuel tank issues connected with the E-4B aircraft in light of the safety recommendations that NTSB issued as a result of the TWA flight 800 investigation. In March 1999, Air Force OC-ALC held an IRT meeting to continue to review safety issues concerning the center wing fuel tank of the E-4B aircraft. As part of that meeting, the Air Force included the *Panama Study* on the meeting agenda. Participants at this meeting included representatives from Boeing's Commercial Airplane Group and Military Group and NTSB. Officials of both Boeing Commercial

Airplane Group and NTSB told us that this was the first time they had heard about the *Panama Study*. The NTSB Director told us that after this meeting, NTSB requested a copy of the entire study but instead received just a summary from the Air Force. In June 1999, after your Subcommittee's intervention, the Air Force provided the entire study to NTSB.

Views Concerning the Relevance of the 1980 *Panama Study*

Air Force OC-ALC officials told us that when Boeing brought the *Panama Study* to their attention, it was placed on the IRT meeting agenda for discussion. These officials told us that they did not intentionally withhold the *Panama Study* from the NTSB, because both civilian and military personnel within Air Force OC-ALC believed the *Panama Study* to be an operational or readiness study, not a safety study. They added that they continue to believe that the *Panama Study* was not relevant to the NTSB investigation.

We questioned Air Force OC-ALC officials about the apparent inconsistency in not believing the study to be safety-related, even though it had been placed on the agenda of the IRT to be considered in a review and validation of its current safety procedures. We were told by Air Force officials that the *Panama Study* was placed on the agenda to show that the E-4B aircraft was equipped somewhat differently and was capable of operating under more difficult conditions than the commercial 747 version. They said that for this reason, the study was not placed on the agenda for safety concerns.

Officials of both Boeing's Military and Commercial groups told us that to their knowledge, no one intentionally withheld this study from NTSB. Like the Air Force, Boeing Military Group officials characterized the *Panama Study* as an operational or readiness study, rather than a safety study. Officials of Boeing's Commercial Airplane Group concluded that the *Panama Study* was of limited use to NTSB's investigation of TWA flight 800 because although the E-4B and 747 aircraft are similar in design, the two aircraft have many internal differences. However, they admitted that the *Panama Study* would have at least given NTSB some initial data concerning a center wing fuel tank heating study of an aircraft that was the Boeing military version of the 747.

NTSB's Chairman and Director of Aviation Safety stated that had NTSB received the *Panama Study* in 1996 following the crash of TWA flight 800, it would have saved valuable time and resources in conducting its investigation. They added that this report would have been particularly significant in that, at the start of the TWA flight 800 investigation, Boeing officials initially told NTSB that the temperature inside the center wing fuel tank on the 747 aircraft was incapable of rising above a certain level. As we noted earlier, the Director said that subsequent tests conducted by both Boeing and NTSB did not support this claim.

The Chairman and Director also stated that the *Panama Study* might have been very helpful to NTSB in its 1990 investigation of a Boeing 737 aircraft explosion at Manila Airport in the Philippines. The explosion occurred in the aircraft's center fuel tank. According to both the Chairman and Director, it is possible that if they had received this study in 1990, safety recommendations made as a result of the TWA flight 800 investigation concerning fuel tanks may have been issued sooner. The Director told us that safety recommendations issued by NTSB routinely follow investigations of aviation accidents to prevent similar occurrences.

B-283640

We will make copies of this letter available to others on request. If you have any questions, please contact me on (202) 512-7455 or Assistant Director Ron Malfi at (202) 512-6722. Senior Special Agent Patrick F. Sullivan made a significant contribution to this report.

Sincerely yours,

Robert H. Hast
Acting Assistant Comptroller General
for Special Investigations

(600585)

National Transportation Safety Board
Washington, DC 20594

1967 – 30 Years of Transportation Safety – 1997

Office of the Chairman

AUG 2 0 1999

Mr. James J. Roth
Chief Division Counsel
U.S. Department of Justice
Federal Bureau of Investigation
26 Federal Plaza
New York, New York 10278

Dear Mr. Roth:

Thank you for your letter dated July 15, 1999, in which you submitted five sets of photographs pertaining to the TWA flight 800 wreckage. In the letter, you requested that Mr. Frank Zakar, one of the Safety Board's metallurgical engineers, look at the photographs to determine if any were the photographs he took and were not returned to him.

Mr. Zakar has advised me that photographs from the group numbered 7558 appear to be a set of photographs he testified that he took and were not returned to him. He also indicated that another set of photographs showing overall views of the hangar were not included in the July 15 submission and were not delivered to him. However, Mr. Zakar also indicated that photographs that have not been recovered are no longer needed for the completion of the Safety Board's reports pertaining to the TWA flight 800 accident.

Mr. Zakar and I thank your office for taking the time to search and retrieve the missing photographs.

Sincerely,

Jim Hall
Chairman

cc: Honorable Charles E. Grassley
United States Senate
135 Senate Hart Office Building
Washington, D.C. 20510-1501

United States General Accounting Office
Washington, DC 20548

Office of Special Investigations

September 13, 1999

Mr. Michael DeFeo
Assistant Director
Office of Professional Responsibility
Federal Bureau of Investigation
Washington, DC 20535

Dear Mr. DeFeo:

This letter is in reference to an August 20, 1999, telephone conversation between you and Senior Special Agent (SSA) Patrick F. Sullivan of GAO's Office of Special Investigations (OSI) in Washington, DC. It also references previous conversations between Eleni Kalisch, of the Federal Bureau of Investigation (FBI) Office of Congressional and Public Affairs and SSA Sullivan.

At the request of the Subcommittee on Administrative Oversight and the Courts, Senate Committee on the Judiciary, OSI conducted an investigation to determine if the FBI forwarded a copy of a Bureau of Alcohol, Tobacco and Firearms (ATF) report, dated January 20, 1997, to the National Transportation Safety Board (NTSB). FBI Assistant Director in Charge (ADIC) Lewis Schiliro claimed in oral and written testimony before the Subcommittee on May 10, 1999, that the report had been forwarded to NTSB.

Shortly after the May 10, 1999, hearing, the Subcommittee received a letter, apparently authored by a FBI agent assigned to your New York Office (NYO). That agent, who wished to remain anonymous, criticized ADIC Schiliro and other supervisors for poor management skills in conducting the Trans World Airlines (TWA) flight 800 case and other investigations. In the letter, the agent recounted the testimony of ADIC Schiliro and described it as not credible. The letter also outlined (1) possible criminal conduct on the part of FBI employees and supervisors in the NYO involving alleged voucher fraud and (2) alleged violations of FBI policy and unethical conduct on the part of ADIC Schiliro and other supervisors in a case involving a high-level confidential informant. However, it appears that the agent's motivation for writing the letter was to renounce ADIC Schiliro's testimony as not credible.

After we made initial inquiries with NYO concerning our investigation into whether the FBI forwarded the ATF report, a copy of the same letter was sent directly to us, apparently from the same anonymous source. The Subcommittee has asked that we not release the entire letter to you. However, we will provide specific information on the two most serious allegations.

Alleged Voucher Fraud

- Under the "flat lining" voucher expense reporting system, receipts for lodging are no longer required. This has led to widespread exploitation by FBI employees.

- Supervisory Special Agent Ray Kerr arranged to have his primary relief supervisor, Conrad Motyka, work the security detail for the TWA flight 800 investigation when Mr. Motyka's wife was also working the detail. Although they stayed in the same hotel room, both Motyka and his wife submitted vouchers, each claiming reimbursement for the hotel room. Special Agent Kerr was aware that the vouchers submitted were fraudulent but approved them anyway.

- Management of NYO realized that agents were exploiting the flat lining system during the TWA flight 800 case. In January or February 1997, NYO Financial Manager Allen Kroft issued a directive requiring FBI employees (1) to stay at the Smithtown Sheraton where the FBI had arranged for direct payment by the NYO and (2) not to claim lodging expenses on their vouchers. However, many agents ignored the directive, including Special Agent Maureen Setzer who the letter named as one employee who did not stay at the Smithtown Sheraton. Any voucher submitted after Financial Manager Kroft's directive and that claims lodging expenses should be reviewed for potential fraud.

Alleged Unethical Conduct and Violations of FBI Policy Involving a High-Level Confidential Informant

- In December 1997, ADIC Schiliro (when he was Special Agent in Charge of the NYO Criminal Division) and Supervisory Special Agents Timothy Dorch and Ray Kerr engaged in unethical conduct and violated FBI policy. The alleged behavior purportedly occurred during an investigation of a high-profile public official that used a high-level confidential informant (CI). The CI's contact agent was assigned to the Washington Field Office (WFO). The contact agent made the CI available to NYO for a debriefing regarding an ongoing investigation. The contact agent did not authorize the NYO agent to operate the CI but, rather, to simply elicit intelligence from the CI. The WFO contact agent objected after ADIC Schiliro ordered the NYO agent to operate the CI in a proactive way against the high-profile public official. The NYO agent informed his supervisor, Special Agent Kerr, that the contact agent had objected and that under FBI policy, the CI should not be controlled by NYO. The WFO contact agent believed the operation would place the life of the CI in danger. While Special Agent Kerr initially agreed with the NYO agent, he later reversed himself under pressure from Mr. Schiliro, who was afraid that WFO would work the case and get the credit. Mr. Schiliro

envisioned the media attention after NYO arrested the public official. After Special Agent Kerr ordered the NYO agent to continue with the operation using the CI, the NYO agent resigned rather than engage in unethical conduct and violate FBI policy.

We are referring these allegations to your office for further inquiry. Please advise this office of the results of your inquiry within 60 days of receiving this letter. The Subcommittee has informed OSI that upon receipt of your information, a decision will be made on what additional action, if any, needs to be taken.

If you have questions or require additional information concerning this request, please contact Assistant Director Ronald Malfi (202) 512-7420 or SSA Sullivan on (202) 512-7472.

Sincerely yours,

Robert H. Hast
Acting Assistant Comptroller General
for Special Investigations

cc: The Honorable Charles Grassley, Chairman, Subcommittee on Administrative Oversight and the Courts, Senate Committee on the Judiciary

ORRIN G. HATCH, UTAH, CHAIRMAN

STROM THURMOND, SOUTH CAROLINA
CHARLES E. GRASSLEY, IOWA
ARLEN SPECTER, PENNSYLVANIA
JON KYL, ARIZONA
MIKE DEWINE, OHIO
JOHN ASHCROFT, MISSOURI
SPENCER ABRAHAM, MICHIGAN
JEFF SESSIONS, ALABAMA
BOB SMITH, NEW HAMPSHIRE

PATRICK J. LEAHY, VERMONT
EDWARD M. KENNEDY, MASSACHUSETTS
JOSEPH R. BIDEN, JR., DELAWARE
HERBERT KOHL, WISCONSIN
DIANNE FEINSTEIN, CALIFORNIA
RUSSELL D. FEINGOLD, WISCONSIN
ROBERT G. TORRICELLI, NEW JERSEY
CHARLES E. SCHUMER, NEW YORK

MANUS COONEY, *Chief Counsel and Staff Director*
BRUCE A. COHEN, *Minority Chief Counsel*

United States Senate
COMMITTEE ON THE JUDICIARY
WASHINGTON, DC 20510-6275

June 3, 1999

The Honorable Louis J. Freeh
Director
Federal Bureau of Investigation
935 Pennsylvania Avenue, N.W.
Washington, D.C. 20535-0001

Dear Director Freeh:

This week, I received a letter dated May 25, 1999, from approximately 450 personnel from the FBI's New York Office (NYO) protesting the hearing of the Subcommittee on Administrative Oversight and the Courts on May 10, 1999. That hearing demonstrated the FBI's failed management of the TWA Flight 800 case.

Among those who signed the letter were senior FBI managers in the NYO. It is my judgment that this letter-writing campaign was orchestrated by current and former senior FBI managers.

During the hearing, I drew a clear distinction between rank and file agents, all of whom worked diligently throughout the investigation, versus the decision-making by FBI management on the scene. Now, management is clearly trying to wrap its arms around the rank and file as a screen against legitimate criticism of its failures.

During my opening statement, I stated the following:

"I believe that each and every FBI agent and employee who showed up on the scene of that tragic crash did the best job they could, and had the best of motives. The same goes for the employees of other agencies and groups who worked so hard. Many volunteered. And they sacrificed their time and their commitment for a greater and humanitarian good.

"There was a basic problem, however. In my view, it was one of leadership. FBI leadership, in the case of TWA Flight 800, was a disaster."

I feel very strongly about that entire statement. We learned of many instances in which management kept agents and investigators in the dark about certain information. They were told only about information that fit a bomb or missile theory, seldom if ever to fit mechanical failure. To say that rank and file employees could be faulted in any way is absurd.

In my view, FBI managers have felt the embarrassment of its

failures, and are trying to hide behind the dignity and dedication of others within the FBI. For example, Mr. Lewis Schiliro, the current Assistant Director in Charge (ADIC), NYO, had ample opportunity to question the basis and legitimacy of the Subcommittee hearing. He chose not to do so, either in the two versions of his written testimony, or his oral presentation. Instead, he waited to challenge its premise in a letter, burying his name among many other signatures.

FBI managers have also failed to refute many of the specific examples presented by the witnesses at the hearing. Strong general protestations absent controvertible documentation is a weak response. For example, Mr. Schiliro's insistence that a January 20, 1997 report by the ATF showing mechanical failure was in fact sent by former ADIC James Kallstrom to the National Transportation Safety Board (NTSB) could not be substantiated by documentation. I have asked the General Accounting Office, an independent agency, to conduct an inquiry.

In my view, this letter is another demonstration of poor leadership on the part of managers in the NYO. Neither the FBI as an institution, nor the many hard working men and women of the NYO and throughout the FBI is well-served by this feeble attempt.

Rather, this orchestration smacks of FBI managers resisting legitimate, constitutional oversight by the United States Congress. The FBI is not above the Constitution. I am sure you would agree with me.

When FBI management failures occur, such as in the Ruby Ridge, Waco and Richard Jewell cases, and now the TWA 800 case, the public expects a full airing and full accountability by the Congress. I take that responsibility seriously. That is how public confidence in federal law enforcement is restored. That is my number-one goal.

During the course of the hearing, the public heard the primary reason why the FBI's commandeering of the case from the NTSB was such a mistake. The issue is one of methodology. The FBI's mission is not to find out what caused the crash -- either sabotage, mechanical error, or human failure. The FBI's mission is to find the culprit if the physical evidence points to sabotage.

NTSB's mission, on the other hand, is to determine the cause. Its primary concern is with public safety. If the FBI is the lead agency before sabotage is determined, the NTSB's mission is hindered, and public safety might be at risk. That is precisely what happened in the case of TWA 800. And that is why, by statute, Congress gave the NTSB the lead on accident investigations.

The May 25 letter shows that, instead of learning from this lesson, FBI managers in the NYO are denying the reality of what happened and are resisting constructive criticism to correct its process. That means the situation may occur again in the future,

thereby once again putting public safety at risk.

There are several factual inaccuracies in the May 25 letter, some of which I would call to your attention.

1. The letter charges that the hearing was one-sided. Instead, the hearing simply completed the record that was hidden from the public. Mr. Kallstrom had engaged in an unprecedented barrage of media hype over the period of a year and a half. The public heard almost daily only Mr. Kallstrom's view of what caused the crash.

For instance, Mr. Kallstrom never told the public until nearly a year after he knew, that the ATF had concluded the cause was mechanical failure, that the CIA had concluded the cause was not a missile, and that the Navy also concluded it was not a missile. To say that the Subcommittee's airing of these facts in light of this is one-sided is to deny the public's right to know the rest of the story.

2. The letter states that it was asserted that "the FBI should have withdrawn from the investigation only weeks into the probe..." I certainly did not make such an assertion. Perhaps NYO managers can find such an assertion in the record and inform me that I am incorrect.

3. The letter states that FBI managers' decisions "did not obstruct, delay or detract from the common mission...", i.e. to determine the cause of the crash. The author of the letter obviously did not attend or view the hearing. There would have been no reason for such a hearing had the Subcommittee not uncovered ample evidence refuting such a statement. Both the record and the numerous press stories about the hearing will confirm this.

4. The letter states that this is a matter of inter-agency conflict. This hearing was clearly not about an inter-agency conflict. Once again, the letter's author missed the point. Even one of the FBI's own employees -- the Chief Metallurgist on the TWA case -- corroborated and augmented the testimony of others. And he, Mr. William Tobin, was in a position to be knowledgeable and unbiased with respect to his own agency. Mr. Tobin is a renowned and credible professional within the world's forensic community.

5. The letter acknowledges that there were "incidents that may not have met the usual high FBI forensic standards." But they are called "anomalies."

Forensic professionals brought these "anomalies" to our attention. They were so outraged by what they saw that they came forward under great stress to educate the public as to what happened. This was not a pleasant experience for them. They came forward in hopes that similar breakdowns will never happen again.

Not only was the risking of public safety an issue. One investigator the Subcommittee interviewed said, if this had been a criminal case, the FBI would have been in trouble because of all the evidence that was compromised.

In conclusion, Mr. Director, I hope it is not your intention to condone such behavior on the part of the NYO management. By sending this letter, they are exhibiting the same tendencies that characterized the management of the TWA 800 case -- NYO managers are out of control.

NYO management said this letter would be distributed to 1,000 personnel in the NYO. Less than half of them signed the letter. Among the other half are agents that I have been talking to on a confidential basis. I guarantee you that, from what I have heard, there is much sentiment within the NYO for what I have expressed to you.

I hope you will see fit to distribute this letter to the NYO so that rank and file employees can better understand my objective and that of their managers. This counter-offensive to legitimate Congressional oversight is not in the job description of FBI managers, and certainly does little to persuade the American public that their taxpayers' dollars are being effectively used to fight crime and terrorism.

I would appreciate it if you would look into this matter and report back to me.

Sincerely,

Charles E. Grassley
Chairman, Judiciary Subcommittee
on Administrative Oversight
and the Courts

May 25, 1999

Honorable Charles E. Grassley
United States Senator
135 Senate Hart Office Building
Washington, D.C. 20510-1501

Dear Senator Grassley,

We, the undersigned Special Agents and professional Support Staff of the FBI's New York Office, are writing to you in our individual capacities and on our own initiative in response to the Subcommittee hearing chaired by you on Monday, May 10, 1999, regarding the FBI's handling of the TWA Flight 800 investigation. As you are no doubt aware, it is somewhat unusual, if not unprecedented, for FBI employees to respond to a Subcommittee hearing in such manner. However, because we believe your opening and closing remarks were biased and inaccurate, and the testimony elicited from the non-FBI witnesses completely one-sided, we feel compelled to set forth our views to you and to correct the record.

After carefully reviewing the May 10 hearing in its entirety, we believe it is fair to describe it as a one-sided, incomplete and distorted portrayal of the FBI's investigation with no apparent purpose other than to embarrass the FBI. Suffice it to say, Senator, that although your stated purpose was, "to restore the confidence of the public in federal law enforcement", the effect was entirely the opposite. To convey to the American people, as you did, that there is a "systemic cultural problem" within the FBI, an "intimidation factor" that exists which ultimately constituted "a model for failure" in the TWA 800 investigation is an egregious error in judgement and a totally unfair departure from the truth. To state, unequivocally, as you did, that "FBI leadership in the TWA 800 case was a disaster" was extremely unfortunate and totally contrary to the adept and sensitive handling of a national tragedy by former Assistant Director-in-Charge James Kallstrom and our other managers in the New York Field Office.

As FBI employees, proud members of perhaps the most accomplished and renowned fact-finding agency in the world, we are devoted to seeking the truth even when the facts or circumstances reveal wrongdoing or misfeasance on our part or cause us embarrassment. We can assure you and the American people that any incidents that may not have met the usual high FBI forensic standards were isolated aberrations and certainly not typical of the careful and detailed handling of hundreds of thousands of evidentiary items that occurred during the TWA case. Your effort to portray such anomalies, real or imagined, as a routine application of FBI scientific methods is patently false and an unwarranted professional insult to us all.

In his written testimony submitted to the Subcommittee, our current Assistant Director-in-Charge Lewis D. Schiliro, set forth the ample predication for our investigation. From the beginning, we in the New York Office of the FBI were clear that

our mission was to determine whether or not this national calamity was the result of a criminal act. The clarity of the mission should not be confused with the great complexity in accomplishing it. It is sadly unfortunate that your witnesses failed to recognize the obvious jurisdiction of the FBI and its responsibility to pursue the criminal aspects of the case. To assert that the FBI should have withdrawn from the investigation only weeks into the probe when a host of viable and probative avenues for investigation were being generated and pursued is illogical and inane. Early on, it was collectively decided that the FBI would conduct a parallel criminal investigation in close coordination with the NTSB, the acknowledged lead federal agency in the investigation of civil air crashes. The NTSB, at the highest levels, concurred with this approach and, on any number of occasions, requested the FBI to explain to its investigative parties the need for adherence to the Federal Rules of Evidence. To suggest, almost three years later, based upon misperceptions of lower level NTSB personnel, that this was a major issue is totally disingenuous.

In fact, most of the "investigative team", which included the FBI, its law enforcement colleagues, the U.S. Navy, the NTSB and its numerous investigative parties (Boeing, TWA, ALPA, etc.), were bound together in a common goal, trying to find the cause of the demise of TWA Flight 800 and the untimely tragic deaths of two hundred and thirty innocent victims. Although differences in culture and protocol surfaced, as they would in any multi-agency approach to a major investigation, they did not obstruct, delay or detract from the common mission we were engaged in. To the contrary, the FBI's meticulous attention to detail complemented all aspects of the safety investigation. In numerous instances, the FBI supplied significant resources to assist NTSB investigative projects. In addition, at the behest and insistence of the FBI, heretofore untried three-dimensional reconstruction projects were carried out. Even initial critics now praise the investigative value of these efforts. Conversely, the FBI, frequently drew upon the aviation expertise of the NTSB and the aircraft industry parties to help answer aviation related questions that pertained to the FBI's parallel criminal investigation. Quite candidly, the FBI's assiduous efforts in tackling complex analytical problems with respect to the aircraft wreckage were often the subject of unsolicited praise and compliment from the NTSB and such entities as Boeing and TWA.

Time and space constraints preclude us from delineating herein the many positive aspects of the FBI's investigation and the numerous high points of our interaction with the many other entities involved. Assistant Director Schiliro's written statement and attachment submitted to the Subcommittee detail the scope of the FBI's efforts. Considering the mammoth scope of the evidence collection problem we confronted, and the extraordinarily complex multi-pronged investigation that had to be conducted, we believe that the overall performance of our Agents, in collaboration with many of our law enforcement colleagues, was exemplary and would withstand the closest scrutiny by any fair minded person.

Senator, in citing these efforts, it is not our purpose to be self-aggrandizing, for it is our solemn duty to perform in such fashion. Nor is it our purpose to criticize or cast

blame on others, as, unfortunately, some have chosen to do. We believe that public displays of inter-agency conflict, without any attempt to address procedural differences within existing lines of inter-agency communication, undermine and erode the public's confidence in our government institutions. Rather, our sole purpose is to correct the erroneous public record created by the May 10th hearing. This letter is submitted for that purpose and we stand ready to provide more documentary and anecdotal evidence should that be required, consistent with FBI policy and procedure. Your portrayal of the FBI's performance with a broad negative brush is not only contrary to fact, but a great disservice to the many men and women of the FBI who contributed so much of their energy, time and emotion to this investigation.

In closing, Senator, let us simply state, for the benefit of the American people and, in particular, the victims' families (many of whom we met during the course of the seventeen months our agency was actively involved and who would attest to the level of commitment of our agents), that we are exceedingly proud of the FBI's performance and devotion to duty in meeting the immense challenges posed by the tragedy of TWA 800. To have performed in a limited and incomplete manner, as some have advocated, would have been a shameful blemish to our agency's reputation. More importantly, it would have constituted a gross failure in fulfilling our responsibilities, and a grave disappointment, to the families of the victims and to the American people we so proudly and honorably serve.

Should you wish to respond to this letter you may contact Special Agent Frank Schulte in care of the New York office of the FBI.

Sincerely,

Attached are the signatures of personnel of the New York FBI office.

[EDITORS NOTE: Signatures not available.]