AUTHENTICATED
U.S. GOVERNMENT
INFORMATION
GPO

ENSURING PROGRAM GOALS ARE MET: A REVIEW OF THE METROPOLITAN AREA ACQUISITION PROGRAM

HEARING

BEFORE THE

SUBCOMMITTEE ON TECHNOLOGY AND PROCUREMENT POLICY

OF THE

COMMITTEE ON GOVERNMENT REFORM

HOUSE OF REPRESENTATIVES

ONE HUNDRED SEVENTH CONGRESS

FIRST SESSION

JUNE 13, 2001

Serial No. 107–41

Printed for the use of the Committee on Government Reform

Available via the World Wide Web: http://www.gpo.gov/congress/house
http://www.house.gov/reform

U.S. GOVERNMENT PRINTING OFFICE

77–353 PDF WASHINGTON : 2002

For sale by the Superintendent of Documents, U.S. Government Printing Office
Internet: bookstore.gpo.gov Phone: toll free (866) 512–1800; DC area (202) 512–1800
Fax: (202) 512–2250 Mail: Stop SSOP, Washington, DC 20402–0001

COMMITTEE ON GOVERNMENT REFORM

DAN BURTON, Indiana, *Chairman*

BENJAMIN A. GILMAN, New York
CONSTANCE A. MORELLA, Maryland
CHRISTOPHER SHAYS, Connecticut
ILEANA ROS-LEHTINEN, Florida
JOHN M. MCHUGH, New York
STEPHEN HORN, California
JOHN L. MICA, Florida
THOMAS M. DAVIS, Virginia
MARK E. SOUDER, Indiana
JOE SCARBOROUGH, Florida
STEVEN C. LATOURETTE, Ohio
BOB BARR, Georgia
DAN MILLER, Florida
DOUG OSE, California
RON LEWIS, Kentucky
JO ANN DAVIS, Virginia
TODD RUSSELL PLATTS, Pennsylvania
DAVE WELDON, Florida
CHRIS CANNON, Utah
ADAM H. PUTNAM, Florida
C.L. "BUTCH" OTTER, Idaho
EDWARD L. SCHROCK, Virginia
JOHN J. DUNCAN, Tennessee

HENRY A. WAXMAN, California
TOM LANTOS, California
MAJOR R. OWENS, New York
EDOLPHUS TOWNS, New York
PAUL E. KANJORSKI, Pennsylvania
PATSY T. MINK, Hawaii
CAROLYN B. MALONEY, New York
ELEANOR HOLMES NORTON, Washington, DC
ELIJAH E. CUMMINGS, Maryland
DENNIS J. KUCINICH, Ohio
ROD R. BLAGOJEVICH, Illinois
DANNY K. DAVIS, Illinois
JOHN F. TIERNEY, Massachusetts
JIM TURNER, Texas
THOMAS H. ALLEN, Maine
JANICE D. SCHAKOWSKY, Illinois
WM. LACY CLAY, Missouri
——— ———
——— ———
———
BERNARD SANDERS, Vermont (Independent)

KEVIN BINGER, *Staff Director*
DANIEL R. MOLL, *Deputy Staff Director*
JAMES C. WILSON, *Chief Counsel*
ROBERT A. BRIGGS, *Chief Clerk*
PHIL SCHILIRO, *Minority Staff Director*

SUBCOMMITTEE ON TECHNOLOGY AND PROCUREMENT POLICY

THOMAS M. DAVIS, Virginia, *Chairman*

JO ANN DAVIS, Virginia
STEPHEN HORN, California
DOUG OSE, California
EDWARD L. SCHROCK, Virginia

JIM TURNER, Texas
PAUL E. KANJORSKI, Pennsylvania
PATSY T. MINK, Hawaii

EX OFFICIO

DAN BURTON, Indiana

HENRY A. WAXMAN, California

MELISSA WOJCIAK, *Staff Director*
AMY HEARINK, *Professional Staff Member*
JAMES DECHENE, *Clerk*
MARK STEPHENSON, *Minority Professional Staff Member*

CONTENTS

	Page
Hearing held on June 13, 2001	1
Statement of:	
Doherty, John, vice president, AT&T government markets; James F.X. Payne, senior vice president, government systems, Qwest Communications; Randall L. Lucas, vice president, sales, Federal market, Verizon Federal Inc.; Jerry Hogge, vice president, government solutions and enhanced service providers, Winstar; and David Page, vice president, Federal systems, BellSouth Business Systems	91
Koontz, Linda, Associate Director, Government-wide and Defense System Information Systems, GAO; Sandra Bates, Commissioner, Federal Technology Service, General Accounting Office; Louis DeFalaise, acting director, executive office, U.S. attorney's office; and Commander Robert Day, Commanding Officer, Coast Guard Electronic Support	7
Letters, statements, etc., submitted for the record by:	
Bates, Sandra, Commissioner, Federal Technology Service, General Accounting Office, prepared statement of	29
Davis, Hon. Thomas M., a Representative in Congress from the State of Virginia, prepared statement of	4
Day, Commander Robert, Commanding Officer, Coast Guard Electronic Support, prepared statement of	75
DeFalaise, Louis, acting director, executive office, U.S. attorney's office, prepared statement of	65
Doherty, John, vice president, AT&T government markets, prepared statement of	94
Hogge, Jerry, vice president, government solutions and enhanced service providers, Winstar, prepared statement of	148
Koontz, Linda, Associate Director, Government-wide and Defense System Information Systems, GAO, prepared statement of	9
Lucas, Randall L., vice president, sales, Federal market, Verizon Federal Inc., prepared statement of	138
Page, David, vice president, Federal systems, BellSouth Business Systems, prepared statement of	167
Payne, James F.X., senior vice president, government systems, Qwest Communications, prepared statement of	117

ENSURING PROGRAM GOALS ARE MET: A REVIEW OF THE METROPOLITAN AREA ACQUISITION PROGRAM

WEDNESDAY, JUNE 13, 2001

HOUSE OF REPRESENTATIVES,
SUBCOMMITTEE ON TECHNOLOGY AND PROCUREMENT POLICY,
COMMITTEE ON GOVERNMENT REFORM,
Washington, DC.

The subcommittee met, pursuant to notice, at 2 p.m., in room 2154, Rayburn House Office Building, Hon. Tom Davis (chairman of the subcommittee) presiding.

Present: Representatives Tom Davis of Virginia, Turner, Mink, Jo Ann Davis of Virginia, and Horn.

Staff present: Melissa Wojciak, staff director; Amy Hearink, chief counsel; Victoria Proctor, professional staff member; David Marin, communications director; James DeChene, clerk; Mark Stephenson, minority professional staff member; and Jean Gosa, minority assistant clerk.

Mr. TOM DAVIS OF VIRGINIA. Good afternoon.

I would like to welcome everyone to today's oversight hearing on the Metropolitan Area Acquisition Program. As many of you know, this program is the local telecommunications component of the FTS2001 Program.

As a result of the delays and cost overruns discovered at the committee's April 26 hearing on the FTS2001 Long Distance Program, we decided to undertake a review of the MAA Program and the progress of the transition in local user cities.

Unfortunately, preliminary results indicate many of the same contract management administration issues that plagued the 2001 Program exist in the MAA Program. Today's hearing is going to examine the problems in user cities and explore potential solutions to bring this ambitious program back on track.

To date, the GSA has awarded 37 MAA contracts in 20 user cities. The total value of these contracts is estimated to be $4 billion. The program is being implemented in three phases. Phase 1 and 2 contract awards are now complete and GSA is preparing to begin phase 3 awards.

We are concerned that GSA is moving into phase 3 without evaluating the progress of the program, the delivery of services to the Federal agencies and the overall cost savings to the Government. The MAA Program was designed to capitalize on the goals of the 1996 Telecommunications Program. That act was intended to foster

greater competition in the telecommunications marketplace and to accelerate the deployment of new telecommunications technologies.

The MAA Program grew out of several meetings between industry, GSA and Congress. It was intended to bring competition to the local telecommunications marketplace by providing Federal agencies in high density population cities a choice of contractors using multiple award contract vehicles.

If this program is successful, the Federal Government will be at the cutting edge of procurement for these types of services. Early evidence suggests this will not be the case. Instead of reviewing program problems and working to update strategies, it appears that GSA has not tried to understand the rapidly changing marketplace, nor to realize the competitive landscape envisioned for the MAA cities.

GSA states that the MAA Program is estimated to save the Government $1.1 billion over 8 years. This figure does not account for transition delays or for additional charges agencies may face and the new equipment costs for upfront cutover fees. Transition numbers seem to indicate that actual cost savings are likely to be markedly lower as GSA has missed its transition deadline in all but two cities.

The MAA Program set a 9-month transition phase for each city once notice to proceed was issued to a vendor. Nearly 2 years after phase 1 contract awards in New York, Chicago and San Francisco, transition is only at 11 percent, 42 percent and 65 percent respectively.

While I think it is important that we don't judge the success or failure of the MAA Program by these cities alone, we have to assess what is occurring in each city to generate these delays and immediately utilize this knowledge to update the MAA Program to bring about real cost savings for taxpayers.

Moreover, phase 2 transition numbers indicate similar problems exist. For instance, significant regulatory delays in New York have hindered transition progress and service cutover fees have slowed progress in Dallas. I could offer anecdotal evidence for delays in each of the awarded cities but clearly each city has its own soap opera but no attempt at redrafting has been made.

Similar to the FTS2000 Program, I have no doubt that a healthy blend of issues has contributed to ongoing programmatic problems but I am concerned with the lack of solutions. Once again, it is as if performance goals have no place within a large Government program.

As we discuss next step in acquisition reform, we often talk about moving toward horizontal acquisition to achieve greater economies of scale and government efficiencies. GSA is uniquely positioned to move government in that direction but the continued failures in the FTS2001 Program suggests that contract management administration presents serious challenges for the Government's procurement agencies.

In particular, agency communications appears to be an obstacle for GSA between regions, the headquarters and the services. GSA's Office of Inspector General cited communication difficulties as having a significant impact on the MAA Program in its April 2001 Consulting Services Report.

I also looked at the contract management fees and the full service fees that GSA charges user agencies in MAA cities. It is too early to judge whether Federal agencies are being charged too much for services but I strongly disagree with keeping the amount of these fees hidden from user agencies.

GSA has made it clear that it is not a mandatory provider of local or long distance telecommunications services. Agencies are consumers in this program and they should be able to make informed decisions with their limited budgets. Moreover, agencies seem to have been denied important information about upfront transition and equipment costs that further impact its severely constrained budgets and diverted valuable resources away from mission goals.

I am told the U.S. Coast Guard had to grapple with disconnected search and rescue telephone lines on Staten Island. I can only speculate but I imagine they would have profited from a better understanding of the services that the contract fees provided at the time.

Once again, I am concerned that taxpayers continue to pay for failures in the program. Impediments to acquiring end to end telecommunications services means the Government continues to lag behind the private sector in service delivery to citizens.

Today, the subcommittee is going to hear testimony from the GAO, from the GSA, U.S. Coast Guard and the U.S. Department of Justice. On our second panel, we will be hearing from John Doherty of AT&T; James Payne of Qwest; Randall Lucas of Verizon; Jerry Hogge of Winstar; and David Page of BellSouth.

I will now yield to Congressman Turner.

[The prepared statement of Hon. Thomas M. Davis follows:]

DAN BURTON, INDIANA,
CHAIRMAN

BENJAMIN A. GILMAN, NEW YORK
CONSTANCE A. MORELLA, MARYLAND
CHRISTOPHER SHAYS, CONNECTICUT
ILEANA ROS-LEHTINEN, FLORIDA
JOHN M. McHUGH, NEW YORK
STEPHEN HORN, CALIFORNIA
JOHN L. MICA, FLORIDA
THOMAS M. DAVIS, VIRGINIA
MARK E. SOUDER, INDIANA
JOE SCARBOROUGH, FLORIDA
STEVEN C. LATOURETTE, OHIO
BOB BARR, GEORGIA
DAN MILLER, FLORIDA
DOUG OSE, CALIFORNIA
RON LEWIS, KENTUCKY
JO ANN DAVIS, VIRGINIA
TODD RUSSELL PLATTS, PENNSYLVANIA
DAVE WELDON, FLORIDA
CHRIS CANNON, UTAH
ADAM H. PUTNAM, FLORIDA
C.L. "BUTCH" OTTER, IDAHO
EDWARD L. SCHROCK, VIRGINIA

ONE HUNDRED SEVENTH CONGRESS

Congress of the United States
House of Representatives

COMMITTEE ON GOVERNMENT REFORM

2157 RAYBURN HOUSE OFFICE BUILDING

WASHINGTON, DC 20515–6143

FACSIMILE (202) 225–3974
MAJORITY (202) 225–5074
MINORITY (202) 225–5051
TTY (202) 225–6852

www.house.gov/reform

HENRY A. WAXMAN, CALIFORNIA,
RANKING MINORITY MEMBER

TOM LANTOS, CALIFORNIA
MAJOR R. OWENS, NEW YORK
EDOLPHUS TOWNS, NEW YORK
PAUL E. KANJORSKI, PENNSYLVANIA
PATSY T. MINK, HAWAII
CAROLYN B. MALONEY, NEW YORK
ELEANOR HOLMES NORTON,
DISTRICT OF COLUMBIA
ELIJAH E. CUMMINGS, MARYLAND
DENNIS J. KUCINICH, OHIO
ROD R. BLAGOJEVICH, ILLINOIS
DANNY K. DAVIS, ILLINOIS
JOHN F. TIERNEY, MASSACHUSETTS
JIM TURNER, TEXAS
THOMAS H. ALLEN, MAINE
JANICE D. SCHAKOWSKY, ILLINOIS
WM. LACY CLAY, MISSOURI

BERNARD SANDERS, VERMONT,
INDEPENDENT

Opening Statement of Chairman Tom Davis
Hearing on "Ensuring Program Goals are Met: A Review of the Metropolitan Area Acquisition Program"
Subcommittee on Technology and Procurement Policy
June 13, 2001 at 2:00 pm
2154 Rayburn House Office Building

Good afternoon, I would like to welcome everyone to today's oversight hearing on the Metropolitan Area Acquisition program. As many of you know, this program is the local telecommunications component of the FTS 2001 program. As a result of the delays and cost overruns discovered at the Subcommittee's April 26 hearing on the FTS 2001 long distance program, I decided to undertake a review of the MAA program and the progress of transition in local user cities. Unfortunately, preliminary results indicate many of the same contract management and administration issues that plagued the 2001 program exist in the MAA program. Today's hearing will examine the problems in user cities and explore potential solutions to bring this ambitious program back on track.

To date, the General Services Administration (GSA) has awarded thirty-seven MAA contracts in twenty user cities. The total value for these contracts is estimated to be up to $4 billion. The program is being implemented in three phases. Phase I and II contract awards are now complete and GSA is preparing to begin phase III awards. I am concerned that GSA is moving into phase III without evaluating the progress of the program, the delivery of services to federal agencies, and the overall cost savings to the government.

The MAA Program was designed to capitalize on the goals of the 1996 Telecommunications Program. That Act was intended to foster greater competition in the telecommunications marketplace and to accelerate the deployment of new telecommunications technologies. The MAA program grew out of several meetings between industry, GSA, and Congress. It was intended to bring competition to the local telecommunications marketplace by providing federal agencies in high density population cities a choice of contractors using multiple award contract vehicles. If this program is successful, the federal government will be at the cutting edge of procurement for these types of services. Early evidence suggests this will not be the case. Instead of reviewing program problems and working to update strategies, it appears the GSA has not tried to understand a rapidly changing marketplace in order to realize the competitive landscape envisioned for the MAA cities.

GSA states that the MAA program is estimated to save the government $1.1 billion over eight years. This figure does not account for transition delays or additional charges agencies may face in new equipment costs or up-front cutover fees. Transition numbers seem to indicate that actual cost savings are likely to be markedly lower as GSA has missed its transition deadline in all but two cities. The MAA program set a nine-month transition phase for each city once notice to proceed was issued to a vendor. Nearly two years after phase I contract awards in New York, Chicago, and San Francisco, transition is only at 11%, 42%, and 65% respectively. While I believe it important that we not judge the success or failure of the MAA program by these cities alone, we must assess what is occurring in each city to generate these delays and immediately utilize this knowledge to update the MAA program to bring about real cost savings for taxpayers. Moreover, phase II transition numbers indicate similar problems exist.

For instance, significant regulatory delays in New York have hindered transition progress, and service cutover fees have slowed progress in Dallas. I could offer anecdotal evidence for delays in each of the award cities. Clearly, each city is its own soap opera with an equally bad plotline but no attempt at redrafting has been made. Similar to the FTS 2001 program, I have no doubt that a healthy blend of issues has contributed to ongoing programmatic problems, but I am concerned with the lack of solutions. Once again, it is as if performance goals have no place within a large government program.

As we discuss next steps in acquisition reform, we often talk about moving towards horizontal acquisition to achieve greater economies of scale and government efficiency. GSA is uniquely positioned to move government in that direction. Unfortunately, the continued failures in the FTS 2001 program suggest that contract management and administration present serious challenges for the government's procurement agency. In particular, agency communication appears to be an obstacle for GSA between regions, the headquarters, and the services. GSA's Office of Inspector General cited communication difficulties as having a significant impact on the MAA program in its April 2001 consulting services report.

I will also look at the contract management fees and full service fees that GSA charges user agencies in MAA cities. It is too early to judge whether federal agencies are being charged too much for services but I strongly disagree with keeping the amount of these fees hidden from user agencies. GSA has made it clear that it is not a mandatory provider of local or long distance telecommunications services. Agencies are consumers in this program, and they should be able to make informed decisions with their limited budgets. Moreover, agencies seemed to have been denied important information about up-front transition and equipment costs that further impacted severely constrained budgets and diverted valuable resources away from mission goals. I am told that the United States Coast Guard had to grapple with disconnected search and rescue telephone lines in Staten Island, New York. I can only speculate, but I imagine they would have profited from a better understanding of the services that their contract fees provided at the time.

Mr. TURNER. Thank you, Mr. Chairman.

I appreciate the fact that you have chosen to have a hearing on this subject. As you stated, it has been estimated that we can save upwards of $1 billion if we fully implement the Metropolitan Area Acquisition Program, so we are talking about real money.

It does seem to me that a hearing on the subject is critical because with the changing technology, clearly government, not only within the GSA but the agencies themselves, need to be much more aggressive in taking advantage of the lower prices now being offered in this industry, the ultimate beneficiary being the taxpayer.

I understand that GSA has awarded 37 contracts for services in 20 cities with a potential value of more than $4 billion. However, in many of these instances, the implementation time has been much longer and slower than was provided for in the agreement between the agency and the GSA.

Unfortunately, the promised savings cannot be realized if the contracts are not fully implemented and the purpose of this hearing today is to get to the bottom of the reasons for the delays that have occurred.

I am also going to join the chairman in expressing an interest in the issue of the disclosure of fees by the GSA. It seems to me, as it did to the chairman, that the agency should have the right to know what the contract management fee and full service fee charge by GSA is so they can make an evaluation as to whether or not they want to participate in the GSA-sponsored contract program.

I look forward to hearing from our witnesses today and hopefully this will be another step forward in what I think has overall been a very positive move on the part of the Government to try to save in the cost of local services to our Federal agencies.

Thank you.

Mr. TOM DAVIS OF VIRGINIA. Thank you.

Does anyone else wish to make an opening statement? Hearing none, I would like to call our first panel of witnesses: Linda Koontz of the GAO; Sandra Bates of the General Services Administration; Commander Robert Day of the U.S. Coast Guard; and Louis DeFalaise of the Department of Justice. We appreciate your being here.

I would like to have everyone rise because it is the policy of this committee that all witnesses be sworn before they testify.

[Witnesses sworn.]

Mr. TOM DAVIS OF VIRGINIA. To afford sufficient time for questions, we would like you to limit your statements to not more than 5 minutes. We have the total statements here and will be asking questions based on the total statement which will be entered into the record.

We also may undergo a vote before everyone has testified. What I will try to do is maybe if one of my colleagues can go vote as soon as the bell sounds and get back here, we can have a brief recess and then they will reconvene the meeting but we will keep going for about 10 minutes into it and as soon as they get back, we will reconvene it so we can get all the testimony and then get to questions as quickly as possible.

Linda, why don't we start with you? Thanks for being with us.

STATEMENTS OF LINDA KOONTZ, ASSOCIATE DIRECTOR, GOVERNMENT-WIDE AND DEFENSE SYSTEM INFORMATION SYSTEMS, GAO; SANDRA BATES, COMMISSIONER, FEDERAL TECHNOLOGY SERVICE, GENERAL ACCOUNTING OFFICE; LOUIS DE FALAISE, ACTING DIRECTOR, EXECUTIVE OFFICE, U.S. ATTORNEY'S OFFICE; AND COMMANDER ROBERT DAY, COMMANDING OFFICER, COAST GUARD ELECTRONIC SUPPORT

Ms. KOONTZ. Mr. Chairman and members of the subcommittee, thank you for inviting us to participate in today's hearing on the implementation of GSA's Metropolitan Area Acquisition Program.

As you know, GSA initiated the MAA Program to achieve immediate and substantial price reductions for telecommunications in selected metropolitan areas. It further envisioned that as part of its overall FTS strategy, contractors under the MAA Program would eventually be allowed to compete for FTS2001 long distance service so that agencies could procure telecommunications end-to-end from one source.

At this subcommittee's request, we have been reviewing the MAA Program and specifically we have focused on three issues: the status of the MAA implementation; the fees GSA charges to customer agencies for managing and administering these contracts; and the steps taken by GSA to enable the MAA and the FTS2001 contractors to crossover between these programs and offer both long distance and local service.

My testimony this afternoon provides the interim results of our review which is largely focused on the New York City MAA. This work is continuing and should be completed sometime later this year.

In brief, GSA has awarded 37 MAA contracts for 20 metropolitan areas. Although the contracts require transition to the MAA contracts within 9 months after the contractors have been given authorization to begin implementation, this transition has not occurred as quickly as anticipated. For example, MAA transitions in New York, Chicago and San Francisco are not yet complete almost 2 years after contractors were given notice to proceed.

GSA and the MAA contractors have faced significant challenges in implementing this program. First, in New York the newly deregulated telecommunications environment has produced unexpected barriers to implementation that are taking time to resolve. In addition, both GSA and the contractors have raised numerous issues they believe contributed to implementation delays. These include contractor performance issues, inadequate customer budgets and the length of the process used by GSA to allocate business among contractors in multiple award cities.

We have not yet begun to completely unravel these issues but we will continue our work both on implementation barriers and on GSA's efforts to address them.

With regard to fees, GSA charges customer agencies two types of fees to recover the cost of contract administration and management. These fees, in total, range from about 28 to 84 percent. According to GSA, while these percentages appear substantial, the total cost of services including these fees is substantially lower than the prices under other GSA local service contracts. GSA, how-

ever, does not separately disclose these fees but requires contractors to embed them in the prices.

We believe agencies would benefit from having specific information on fee amounts. It is a key input to agency decisionmaking on whether to use MAA contracts which are not mandatory and it makes GSA accountable to the agencies for the amounts of fees they charge. In the coming months we will be performing a more complete assessment of the fees to determine what costs are included in the fees as well as the support GSA provides to agencies.

Last, in regard to crossover, GSA has not yet allowed MAA contractors to offer FTS2001 services. However, in December 2000, GSA permitted FTS2001 and MAA contractors to offer local services in three of the MAA markets. In addition, GSA has drafted a paper stating it now believes it is appropriate to proceed with determining when to allow additional competition for FTS2001. One of the first steps will be to share this draft with industry representatives at the end of this month.

Mr. Chairman, that concludes my statement. Kevin Conway, the Assistant Director responsible for our MAA study, will be assisting me in answering any questions you might have.

[The prepared statement of Ms. Koontz follows:]

United States General Accounting Office

GAO

Testimony

Before the Subcommittee on Technology and Procurement Policy, Committee on Government Reform, House of Representatives

For Release on Delivery
Expected at
2 p.m. EDT,
Wednesday,
June 13, 2001

TELECOMMUNICATIONS

Metropolitan Area Acquisition Program Implementation and Management

Statement of Linda D. Koontz
Director, Information Management Issues

GAO-01-798T

Mr. Chairman and Members of the Subcommittee:

Thank you for inviting us to participate in today's hearing on the implementation and management of the General Services Administration's (GSA) Metropolitan Area Acquisition (MAA) program. As you know, GSA initiated its MAA program in 1997 in order to achieve immediate, substantial, and sustained price reductions for local telecommunications in selected metropolitan areas, to expand agencies' choices of high-quality services, and to encourage cross-agency sharing of resources. Further, service providers awarded contracts under GSA's MAA program may eventually be allowed to compete for FTS2001 long distance service, so that federal agencies could potentially acquire end-to-end local and long distance telecommunications services from one source.

Mr. Chairman, in an April 2001 letter, you requested us to review the MAA program. Specifically, as agreed with your staff, our work to date has focused on

- the status of MAA contract implementation,
- the fees charged customer agencies by GSA for managing and administering those contracts, and
- the steps being taken by GSA to enable the MAA and FTS2001 contractors to cross over between these programs and offer both local and long distance services.

My testimony this afternoon provides the interim results of our work. This work is continuing and should be completed later this year.

Results in Brief

As of June 2001, GSA had awarded 37 MAA contracts for 20 metropolitan areas. These contracts required transition from existing GSA contracts to the MAA contracts to be completed within 9 months after contractors were authorized to begin implementation. Of the 14 metropolitan areas in which authorization was given 9 months ago or earlier, this time goal was met in 2 areas, but in the 12

others it was not. For example, the MAA transitions for New York, Chicago, and San Francisco are not yet complete almost 2 years after the contractors were authorized to begin implementation.

GSA and the MAA contractors have faced significant challenges in implementing this program. First, in New York City, the newly deregulated local telecommunications environment has produced unexpected barriers to implementation, which will take time to resolve. In addition, GSA and the MAA contractors have raised numerous other factors that they believe have contributed to implementation delays, including contractor performance, customer budgets, and the process used by GSA to allocate business among contractors in multiple award cities. These delays, in turn, postpone the realization of savings under the MAA program.

GSA charges customer agencies two types of fees to recover the costs of their contract management and administration activities. Depending on the specific metropolitan area, these fees (which are assessed as a percentage of the amount charged by the contractor for services), in total, currently range from about 28 to 84 percent. According to GSA, while these percentages appear substantial, the total cost of services, including these fees, is substantially lower than the prices under other GSA contracts for local services. GSA does not separately disclose these fees and instead requires the contractors to embed them in the contract prices. As a result, agencies do not have complete information to help them determine whether using GSA's services is their most economical option.

Although GSA has not yet allowed MAA contractors to offer FTS2001 services, it is taking steps to allow crossover between the two programs. In December 2000, GSA permitted FTS2001 contractors and other MAA contractors to offer local services in three of the MAA markets. In addition, GSA has drafted a paper to clarify its position on permitting additional competition in the FTS2001 program. This paper states that with the transition to FTS2001 nearing completion, GSA has concluded that it is appropriate to proceed with determining when to allow additional competition for FTS2001 services. As one of the first steps in this

process, GSA plans to present this clarification to industry for comment on June 28, 2001.

Background

The MAA program was conceived just a few months after passage of the Telecommunications Act of 1996, which was intended to increase competition and reduce regulations in the telecommunications industry. The MAA program sought to take advantage of emerging competition in the local services market; the program focused on the largest cities in the country, whose population density would be likely to draw competitors into their markets. GSA believed that this emerging competition would create an opportunity for the government to gain an immediate price reduction in local telecommunications services. Further, it envisioned the MAA contracts as a complement to existing contracts in metropolitan areas, as well as a solution for local service contracts that are expiring.

The MAA program is a contractual vehicle for offering local voice and selected data services. Each contract is a fixed-price, indefinite-delivery, indefinite-quantity contract with a base term of 4 years (48 months) from date of award, with four successive 1-year options. The contracts state that all initial service locations identified in these contracts are to be transitioned from existing GSA contracts to the MAA contracts within 9 months after GSA gives "notice to proceed"—authorization for the contractor to begin implementation.

The initial stage of the MAA program (Phase I) consisted of pilot acquisitions in the New York, Chicago, and San Francisco metropolitan areas in May 1999. Bolstered by substantially lower prices in these three pilot cities, GSA expanded the MAA program to other metropolitan areas throughout the country, and awarded contracts in 17 additional cities (Phase II) between February 2000 and February 2001. In Phase III, awards are expected to be made by the end of this calendar year in seven additional cities: Detroit, Kansas City, Norfolk, Oklahoma City, Salt Lake City, San Antonio, and Seattle. GSA estimates that the federal

government could save about $1.1 billion over the 8-year life of the 37 MAA contracts awarded to date.[1]

Each MAA contract also has a minimum dollar guarantee that is divided equally among all original contract awardees for a given metropolitan area. These guarantees were largest in the pilot cities, which were the first (and largest) MAA markets: for New York, the guarantee was $7 million; for Chicago, $3 million; and for San Francisco, $2 million. Guarantees in the most recent contracts have been significantly lower, at $100,000.

GSA's Federal Technology Service (FTS) has responsibility for the MAA program. FTS headquarters is responsible for planning and program management, while FTS staff in GSA's field offices implement and administer the MAA contracts. As a self-sustaining organization, GSA FTS assesses customer agencies two types of management fees to finance its activities: a contract management fee and a full-service fee. The contract management fee is to cover general program, acquisition, and contract management activities and is applied as a percentage of service cost. The full-service fee covers service ordering, implementation planning and coordination, and billing. The full-service fee is an additional percentage applied on top of the total service cost plus the contract management fee.

Federal agencies are not required to use the MAA contracts. Depending on their specific requirements, federal agencies may use the telecommunications services provided through a GSA regional telecommunications services program[2] (using either GSA's MAA contracts or one of GSA's other local services contracts or agreements), or they may acquire and manage their own local telecommunications services and the associated equipment. A substantial number of

---

[1] GSA based these savings estimates on the difference between current service prices in effect for each of the 20 MAA cities and the total amount of the lowest offeror's prices for a given city.

[2] FTS offers a variety of programs through which agencies can acquire local telecommunications service. For example, the Aggregated System Procurement Program consolidated local requirements into an overall system procurement based on the Bell Operating Company boundaries. The Individual System Procurement Program serves locations where the aggregated program does not. In addition, regional FTS offices have also obtained Rate Stabilization Agreements that allow agencies to acquire local tariffed telecommunications services at short-term discounts.

agencies do choose to acquire services through GSA: in FY2000 for example, GSA's local telecommunications services program provided approximately 540,000 active service lines to government agencies, at an average monthly cost per line of $18.81.

Although it focuses on local services, the MAA program also has implications for the long distance market. Part of the overall FTS program strategy, developed in 1997 in consultation with industry and the Congress, was to eventually permit contractors to offer both local and long distance services through crossover between the local MAA contracts and the long distance FTS2001 contracts, thereby allowing further competition in both markets. Specifically, MAA contractors would be permitted to compete for FTS2001 long distance business (1) where allowed by law and regulation, (2) after the FTS2001 contracts have been awarded for a year (known as the forbearance period), and (3) if GSA determines that it is in the government's best interests to allow such additional competition.

Objectives, Scope and Methodology

The objectives of our ongoing review are to provide information on (1) the status of MAA contract implementation, (2) the fees charged customer agencies by GSA for the management and administration of those contracts, and (3) the steps being taken by GSA to enable the MAA and FTS2001 contractors to cross over between these programs and offer both local and long distance services.

In our work to date, we have addressed these objectives by reviewing MAA contract documentation, including solicitations, contracts, and associated modifications. We also reviewed an internal GSA management report on MAA implementation challenges prepared by GSA's Office of Inspector General (OIG), and interviewed the staff who prepared this report.

To evaluate the status of MAA implementation efforts, we reviewed reports generated by GSA's automated MAA status tracking system, verifying the

information in the reports against other available documentation such as billing system reports. To better understand how the program is being implemented, we visited the New York City FTS Region 2 office, reviewed contract management documentation, and interviewed GSA FTS regional management staff responsible for program implementations in New York and in Buffalo. To gain the customers' perspective on MAA implementation, we also interviewed agency managers at the Department of Housing and Urban Development in New York City and at the Office of U.S. Trustees and the U.S. Attorney's Office in Washington, D.C. We also met with AT&T MAA managers in Washington, D.C., and in New York, as well as Verizon MAA program managers in Washington, D.C., to gain additional information and documentation pertaining to program implementation and management.

To determine the management fees charged by GSA and how those fees are derived, we reviewed documentation on those fees as well as MAA management roles and responsibilities, and interviewed FTS program managers as well as the FTS Financial Service Center manager responsible for developing those rates.

To determine the steps being taken by GSA regarding FTS crossover, we obtained and reviewed an initial draft policy clarification prepared by GSA, analyzed documentation pertaining to GSA's December 2000 decision to lift forbearance in the MAA pilot cities, and reviewed documentation pertaining to GSA's first crossover award. We also discussed the draft policy clarification with GSA FTS managers.

MAA Implementation Status

As of June 2001, GSA had awarded 37 MAA contracts for 20 metropolitan areas. Table 1 summarizes MAA contract awards and GSA's estimated savings for each area. As indicated in the table, in 8 of the 20 metropolitan areas, a single contract was awarded. In addition, GSA recently decided to allow MAA contractors to cross over between cities and offer services in areas other than those in which they were awarded an MAA contract.[3] Two contractors have so far responded to this decision: In March 2001, GSA accepted Verizon's proposal to offer MAA services in New York, and Winstar has submitted proposals to offer services in all three Phase I cities.

[3] These crossovers are not reflected in the table because they do not represent new awards.

Table 1. MAA Contracts Awarded as of June 5, 2001

Metro area	Award date	Estimated savings (millions of dollars)	Contractor(s)
Phase I (pilot)			
New York	20 May 1999	$150	AT&T
Chicago	20 May 1999	75	AT&T
San Francisco	20 May 1999	32	AT&T
Phase II			
Buffalo	24 Feb 2000	6.4	AT&T Verizon
Cincinnati	23 Mar 2000	36.6	Winstar
Cleveland	24 Mar 2000	20	Ameritech (SBC) AT&T
Los Angeles	24 Mar 2000	47	Pacific Bell (SBC) Winstar
Baltimore	28 Mar 2000	44	Winstar
Atlanta	26 Apr 2000	174	Bell South Winstar
Miami	26 Apr 2000	44	Bell South Winstar
Indianapolis	27 Apr 2000	51	AT&T SBC Global Winstar
St. Louis	27 Apr 2000	36	Southwestern Bell (SBC) Winstar
Minneapolis	31 May 2000	13	Qwest Winstar
Dallas	30 Jun 2000	128	AT&T Southwestern Bell (SBC) Winstar
Denver	12 Jul 2000	68	AT&T Qwest Winstar
Boston	31 Jul 2000	78	AT&T Southwestern Bell (SBC) Verizon Winstar
Albuquerque	31 Aug 2000	19	Qwest
Boise	31 Aug 2000	6.5	Qwest
New Orleans	16 Oct 2000	11	Bell South
Philadelphia	27 Feb 2001	$66	AT&T Winstar

Source: GSA Federal Technology Service

MAA Implementation Has Been Delayed

Although the MAA contracts require transition to be completed within 9 months after contractors are given notice to proceed, GSA's implementation of these contracts has not been as fast as anticipated. As shown in table 2, for example, almost 2 years after notice to proceed was given, 66 percent of users in San Francisco, 43 percent of users in Chicago, and only 12 percent of users in New York are converted to MAA contracts.

Table 2: Percentage of GSA Local Telecommunications Users Converted to MAA Services as of June 1, 2001

Metro area	Award date	Notice to proceed date	Implementation status
New York	20 May 1999	18 Jul 1999	11.74%
Chicago	20 May 1999	15 Jul 1999	42.92%
San Francisco	20 May 1999	19 Jul 1999	65.76%
Buffalo	24 Feb 2000	15 Jun 2000	100.00%
Cincinnati	23 Mar 2000	14 Jul 2000	100.00%
Cleveland	24 Mar 2000	06 Jul 2000	0.00%
Los Angeles	24 Mar 2000	14 Jul 2000	13.54%
Baltimore	28 Mar 2000	29 Jun 2000	7.01%
Atlanta	26 Apr 2000	29 Jun 2000	0.10%
Miami	26 Apr 2000	29 Jun 2000	0.00%
Indianapolis	27 Apr 2000	06 Jul 2000	1.20%
St. Louis	27 Apr 2000	17 Aug 2000	16.49%
Minneapolis	31 May 2000	19 Sep 2000	84.7%
Dallas	30 Jun 2000	11–22 Sep 2000	28.22%
Denver	12 Jul 2000	13 Sep 2000	28.59%
Boston	31 Jul 2000	12 Sep 2000	5.43%
Albuquerque	31 Aug 2000	03 Oct 2000	0.00%
Boise	31 Aug 2000	23 Feb 2001	0.00%
New Orleans	16 Oct 2000	09 Nov 2000	75.64%
Philadelphia	27 Feb 2001	None to date	0.00%

Source: GSA Federal Technology Service

Progress to date implementing the more recently awarded contracts in the Phase II cities has also been mixed. Of the 11 phase II cities where notice to proceed was issued 9 months ago or more (September 13, 2000, or earlier), two—Buffalo and Cincinnati—have completed the conversion to the MAA contracts; implementation in the other 9 cities ranged from 0 to 29 percent complete, as of June 1. In the

six cities where notice was given to proceed after September 13, 2000, completion rates varied from 0 to 85 percent as of June 1.

GSA and Contractors Face Challenges in Completing MAA Implementation

Although they are making progress, GSA and the MAA contractors have faced significant challenges in completing this transition. First, in New York City, the newly deregulated local telecommunications environment has produced unexpected barriers to implementation, which will take time to resolve. In addition, GSA and the MAA contractors have raised numerous other factors that they believe have contributed to implementation delay. These factors include contractor performance, local number portability, contractor marketing, customer budgets, and the process used by GSA to allocate business among contractors in multiple award cities.

Implementing the MAA contract in the newly deregulated local telecommunications environment has created challenges for both GSA and the MAA contractors in New York City. Specifically, more than half the business lines served within this MAA are affected by a regulatory interpretation of access rights, and the associated connection and usage costs, to a building's riser cable (a cable that carries telecommunications services from the network demarcation point, typically in the basement of a building, to distribution facilities within the building). The Federal Communications Commission (FCC) has reviewed this issue and ruled that the incumbent local exchange carrier would retain ownership of the inside wiring, including the riser cable, but that the carrier could not impose fees on the use of this wiring. As a result, the MAA contracts were written under the assumption that the riser cable would be available free of charge to the MAA contractor. However, in New York, the incumbent carrier, Verizon, requires payment from the MAA contractor, AT&T, under a ruling by the New York Public Service Commission (a state regulatory body) that the incumbent carrier could charge for use of the riser cable. As a result, GSA and AT&T have had to delay

implementation efforts in the affected buildings until they can determine a mutually acceptable strategy for dealing with this problem.

In our work to date, GSA and the MAA contractors have raised numerous other factors that they believe have contributed to implementation delays. These include the following:

Contractor performance. According to GSA, AT&T has experienced systemic performance problems that have resulted in untimely service delivery and service outages during implementation and have reduced the willingness of customers to use MAA services. For example, GSA FTS officials told us that implementation in San Francisco was delayed because of recurring equipment problems that AT&T encountered as it installed Integrated Services Digital Network (ISDN) services. According to GSA, these equipment problems resulted in AT&T transitioning only a few lines at time, significantly adding to implementation time.

When we discussed these issues with AT&T MAA program managers, they acknowledged that there had been some performance issues. However, they told us that they recently changed hardware suppliers in order to resolve the equipment problems they had experienced in installing ISDN services. In addition, they stated that GSA had contributed to delays by failing to submit customer service orders to them in a timely manner. They added that discrepancies between the customer information maintained by the incumbent carrier and GSA billing records have been a continuing problem that has added to implementation time.

Local number portability. Local number portability, which allows customers to retain local phone numbers while changing local service providers, has contributed to implementation delays, according to GSA. According to GSA's MAA tracking reports, scheduled implementations in Atlanta and Miami were delayed between 2 and 5 weeks specifically by problems with implementing local number portability. In an internal management report prepared by GSA's OIG, number portability problems were ascribed both to technical difficulties and to

the fact that the incumbent carrier typically has little incentive to assist in this process.

MAA contractor marketing. According to AT&T MAA program officials, GSA has not permitted AT&T to directly market MAA services to customer agencies in New York—a factor these officials believe has delayed implementation efforts. GSA officials, however, told us that AT&T is permitted to directly market these services and must only inform GSA of its plans to do so.

Customer budgets. According to an internal management report prepared by GSA's OIG and discussions with AT&T MAA managers, customers did not budget funding to cover service initiation charges and (in some cases) the cost of upgrading hardware, required as part of MAA implementation. The report cited this as one of the factors that has caused implementation to proceed less quickly than initially projected.

Fair consideration. In multiple-award MAA cities, delays were caused by the fair consideration process[4] that GSA uses to distribute service orders to contractors in cities where there is more than one MAA contractor. In Buffalo, for example, this process was not completed until 3 months after notice to proceed was issued, due in part to the time required by GSA to review all contractor deliverables.

All the delays described affect the potential savings under the MAA program. GSA has estimated that the MAA program could save about $1.1 billion. GSA based its savings estimate on the difference between current service prices in effect for each of the 20 MAA cities and the total amount of the lowest MAA offeror's prices for a given city. However, this estimate does not consider the time required to actually implement these contracts. Because savings are not realized until the service is actually implemented, delays in implementing the contracts in turn

[4] The fair consideration process identified in the MAA contracts is a means for the government to provide contractors a fair opportunity to compete for MAA service orders. According to these contracts, the government may base its fair consideration decision on (1) relative contract prices without further consideration of other factors or (2) a combination of price, technical, and past performance considerations.

delay the realization of savings and limit what can be realized over the 8-year term of the contracts.

More Transparency Is Needed for Management Fees

GSA's two fees—a contract management fee and a full-service fee—vary among the metropolitan areas served. GSA's contract management fee ranges from a low of 9.5 percent in St. Louis to a high of 60 percent in Baltimore, for the 19 MAA cities where fees have been determined. GSA's full-service fee (which is applied on top of the contract management fee) ranges from a low of less than 2 percent in Albuquerque, Dallas-Fort Worth, and New Orleans, to a high of 20 percent in San Francisco.

Table 3 identifies the fees that GSA has set for its MAA contracts. For purposes of comparison, we have also computed a composite fee that combines the contract management and full-service fee rates. To offer some additional perspective, the table also displays the single management fee that GSA currently assesses in MAA cities for non-MAA local telecommunications contracts. (It should be noted, however, that these fees are applied to a much higher base contract price.)

Table 3: GSA Local Telecommunications Management Fees

Metro area	Contract management fee	Full-service fee	Composite fee[a]	Non-MAA management fee
Chicago	30.00%	10.00%	43.00%	56.73%
New York	30.00%	10.00%	43.00%	20.19%
San Francisco	50.00%	20.00%	80.00%	38.60%
Buffalo	40.00%	10.00%	54.00%	20.19%
Cincinnati	32.00%	5.00%	38.60%	56.73%
Cleveland	32.00%	6.00%	39.92%	56.73%
Los Angeles	44.20%	6.20%	53.14%	38.60%
Baltimore	60.00%	15.00%	84.00%	27.26%
Atlanta	26.00%	7.00%	34.82%	34.41%
Miami	28.00%	9.00%	39.52%	34.41%
Indianapolis	22.00%	5.00%	28.10%	56.73%
St. Louis	9.50%	15.79%	26.79%	5.00%
Minneapolis	30.00%	7.00%	39.10%	56.73%
Dallas	30.00%	1.84%	32.39%	30.00%
Denver	30.95%	9.60%	43.52%	27.42%
Boston	38.44%	11.16%	53.89%	32.03%
Boise	24.59%	2.93%	28.24%	33.60%
Albuquerque	30.01%	1.84%	32.40%	30.00%
New Orleans	30.01%	1.84%	32.40%	30.00%
Philadelphia	TBD	TBD	—	27.26%

[a]The formula used for the composite fee is (CMF + FSF) + (CMF × FSF), where CMF = contract management fee and FSF = full-service fee.

Source for contract management and full-service fee percentages: GSA Federal Technology Service

As previously stated, use of the MAA contracts is not mandatory; agencies can choose to procure local services on their own, if they believe they could do so more economically than GSA. In addition, to avoid paying the full-service fee, a customer agency can opt to use the MAA contracts' direct ordering and direct billing option. In so doing, the agency assumes responsibility for its service ordering, implementation planning and coordination, and billing management. To date, only the Internal Revenue Service in the Dallas-Fort Worth MAA has chosen to exercise this option.

GSA, like other federal agencies that provide centralized services, charges these fees to recover the costs of managing the program. In this type of service model, making fees transparent to users is an appropriate and valuable service. First,

disclosing fee amounts provides user agencies with key input to deciding whether to acquire services from the service provider or from alternative sources. Second, such disclosure makes the service provider accountable to customer agencies for providing a level of service commensurate with the fees charged.

The MAA contracts, however, require contractors to embed the GSA fees in the service pricing that they disclose to agencies during marketing activities, as well as on the invoices submitted for payment of services. According to the Assistant Commissioner for Regional Services, GSA took this approach to focus agencies' attention on making decisions based on the total cost of services rather than on the fee percentage. She pointed out that even with the management fees included, the total cost of services under the MAA contracts is dramatically lower than what is available under other local service contracts. For example, in Baltimore, the composite fee is about 84 percent; however, the total MAA monthly cost per service line—including all management fees—is $8.92, compared to $23.92 under another GSA local services contract. As another example, composite fees in Cleveland total about 40 percent. However, the total MAA monthly cost per service line is $22.02, inclusive of fees, compared to $28.67 under another GSA contract vehicle.

Although the total cost of services is obviously a critical factor in making decisions on how to buy local services, specific information on fees would further inform agency decisionmaking. Without such information, an agency in St. Louis, for example, would not be aware that it could lower its local MAA service costs by almost 18 percent if it assumed additional service ordering, billing, and administration responsibilities. Lacking full information on these fees, agencies cannot readily determine whether it is more economical for them to procure their own local services, to procure services through GSA but perform contract and management support activities themselves, or to procure services through GSA and pay GSA for support. Further, agencies cannot accurately discern whether the services provided by GSA are worth the management fees charged. For these

reasons, GSA should consider reassessing its decision not to disclose its fees to user agencies.

MAA Contractor Crossover to the FTS2001 Market

As you know, Mr. Chairman, part of GSA's overarching FTS strategy was to eventually permit MAA and FTS2001 contractors to offer both local and long distance services. Although GSA has delayed allowing MAA contractors to offer FTS2001 services until it could be sure that the minimum revenue guarantees to the current FTS2001 contractors are met, GSA has taken two steps in the past six months to initiate crossover[5] between the MAA and FTS2001 programs. First, in December 2000 GSA lifted forbearance in the three pilot MAA cities, allowing FTS2001 and other MAA contractors to submit proposals to offer local services in those areas. In March 2001, GSA accepted Verizon's proposal to offer MAA services in New York. Winstar has also submitted proposals to offer services in the three pilot cities (New York, Chicago, and San Francisco). Second, GSA has drafted a paper to clarify its position on crossover between and among the FTS2001 and MAA contracts, which the FTS Commissioner has approved. This paper states that with the transition to FTS2001 nearing completion, GSA has concluded that it is appropriate to proceed with determining when to allow additional competition for FTS2001 services. As one of the first steps in this process, GSA plans to present this clarification to industry for comment on June 28, 2001.

— — — — —

Mr. Chairman, that concludes my remarks regarding the interim results of our review of GSA's ambitious MAA program. We will continue our work, focusing on the barriers to timely MAA contract implementation and GSA's efforts to

[5] Three types of contractor crossover are envisioned between and among the FTS2001 and MAA contracts: (1) where a local MAA service provider is allowed to cross over to offer FTS2001 long distance services; (2) where an FTS2001 contractor is allowed to cross over to offer MAA local services; and (3) where an MAA contractor is allowed to cross over into an MAA city in which it did not receive one of that city's initial MAA contracts.

surmount these barriers. In addition, we will more thoroughly evaluate the management fees that GSA is collecting on these contracts, as well as the support that GSA is in turn providing to agencies.

We would like to offer two observations at this time. First, there is a need for greater transparency of the MAA contracts' management fees. An opportunity exists for agencies to make a more informed business decision on whether to buy GSA's management and administrative services or to perform these functions themselves. However, because GSA does not disclose fee information to its customers, they cannot make such fully informed decisions. In addition, disclosing these fees would make GSA more accountable to agencies for the amount of these fees.

Second, our work on the New York MAA indicates that AT&T and GSA have different perspectives on the transition to date. Given the complexity and newness of this implementation endeavor, some of these differences are understandable. However, this situation also suggests the need for an increased quantity and quality of communication between these two parties.

Mr. Chairman, that concludes my statement. I would be happy to respond to any questions that you or other members of the Subcommittee may have at this time.

GAO Contacts and Staff Acknowledgments

For information about this testimony, please contact Linda Koontz at (202) 512-6240 or by e-mail at koontzl@gao.gov. Individuals making key contributions to this testimony included Scott Binder, Kevin Conway, and Mary Marshall.

(310318)

Mr. TOM DAVIS OF VIRGINIA. Thank you very much.

Ms. Bates.

Ms. BATES. Mr. Chairman, thank you again for this opportunity to appear before you today to discuss the Metropolitan Acquisitions Program. In my remarks this afternoon, I will briefly address the strategy, the results of the competitions, the implementation status and our fees.

The collaborative effort that led to the development of the FTS program strategy in the spring of 1997 occurred in the context of the newly enacted Telecommunications Act of 1996. That strategy gave us the framework for bringing the Government's use of telecommunications technology forward into this new century. The MAAs were conceived for three purposes. First, they fulfilled the MAA program goals of maximizing competition to provide the best services and prices to Government users. Second, the MAAs were the first ever competitions designed specifically for the deregulated local markets. They provided an opportunity for public policy leadership by FTS. We stimulated the development of competition by offering government requirements to emerging metropolitan markets. Third, the program crossover provisions anticipated the introduction of additional future competition to incumbent MAA providers.

Since 1999, we have awarded 38 contracts in 21 metropolitan areas across the Nation with price reductions ranging from 30 to 70 percent. By the end of this year, we will have completed 28 cities. At that time, two-thirds of the Federal work force will be within reach of an MAA with attractive prices and state-of-the-art service offerings. Following on the heels of the acquisitions have come the many significant challenges associated with implementation. MAA implementation progress to date reflects the regulatory environment under which the local services industry operates. This environment has been characterized by the need for labor intensive, time consuming, site by site negotiations and problem-solving causing implementation delays.

The local competitive environment today has developed more slowly than expected and is far from mature. The aspects of deregulation that have proved especially challenging for the MAA Program include building access rights, resale of facilities, local number portability and customer issues. Challenges associated with contract initiation, contractor planning and customer-related activities have required more time than we anticipated. In August 2000, we asked the GSA Inspector General to review the program implementation. The IG recently issued their findings and suggestions. We agree with their overall findings and will incorporate their suggestions to improve our program.

Finally, let me comment on our fee structure. Local service is a labor intensive operation, whether managed by FTS or a large private business. Over the past 5 years, we have reduced our fees by about 30 percent. In fact, MAA fees are lower than pre-MAA fees in every city but one. Mr. Chairman, I believe the strategy that we jointly crafted is as sound today as it was when we developed it 4 years ago. The MAA acquisitions continue to be successful in terms of new providers, services and prices. We have brought explicit competition to the local market through multiple award con-

tract vehicles. We have brought agencies real choice of providers and we have state-of-the-art service offerings. We have taken the lead in stimulating competition in the local arena and have gained unparalleled and unique expertise as a result.

It is taking longer than we expected to achieve the benefits of local services competition. We have more work to do. We are committed to staying the course with the MAA Program and to realizing the benefits the program has to offer.

Mr. Chairman, I look forward to your continued leadership and support and I am happy to address any questions you have at this time. With me today is Ms. Margaret Binns, Assistant Commissioner for Regional Services. In that capacity, Margaret is the GSA executive responsible for the MAA Program. She will assist me in addressing questions you and the other Members may have.

[The prepared statement of Ms. Bates follows:]

STATEMENT OF

SANDRA N. BATES

COMMISSIONER

FEDERAL TECHNOLOGY SERVICE

U.S. GENERAL SERVICES ADMINISTRATION

BEFORE THE

SUBCOMMITTEE ON TECHNOLOGY AND

PROCUREMENT POLICY

COMMITTEE ON GOVERNMENT REFORM

U.S. HOUSE OF REPRESENTATIVES

JUNE 13, 2001

Mr. Chairman, thank you again for this opportunity to appear before you today to discuss the Metropolitan Area Acquisitions Program (MAAs). In April you invited me here to discuss the long distance component of the FTS telecommunications program. Today I am here to report to you on the other component of the program –local telecommunications services – a market/sector in which FTS is seeking to stimulate competition.

In your invitation to me you addressed several important questions to GSA regarding the MAA program. The answers to those questions are incorporated within this written version of my testimony. With me today is Ms. Margaret Binns, Assistant Commissioner for Regional Services. In that capacity, Margaret is the GSA executive responsible for the MAA program. She will assist me in addressing questions you and the other Members may have.

Mr. Chairman, the collaborative effort among the members of this committee, industry, the agencies and we at GSA, that led to the development of the FTS program strategy in the Spring of 1997, occurred in the context of the newly enacted Telecommunications Act of 1996. That strategy gave us a solid and flexible framework for bringing the Government's use of telecommunications technology forward into this new century. I have included as part of my testimony the *Statement of Principles* drafted in 1997 (Attachment 1). As I stated in my April testimony before you, we recognized then that maximizing

competition should be our hallmark principle. To achieve this, we called for separate local and long distance competitions with mutual crossover options. Those crossover options allowed for additional competition as those markets evolved. The long distance acquisition became FTS2001 and the local services acquisition became the MAAs.

In my remarks this morning I will address your questions about the MAA program. Specifically I will address our strategy in the context of the MAA program. Next, I will review the results of our MAA competitions held so far. Third, I will delineate the regulatory and program challenges and the MAA implementation status. Fourth, I will discuss our program coordination process. Fifth, I will discuss our fees. Finally, I will discuss how we expect to be positioned for continued future progress and success.

The Strategy and the MAA Program

The MAAs were developed to ensure the best service and price to the Government and to maximize competition. As a government procurement, the MAA strategy offered the first opportunity for the government to use competition to drive local service prices down, just as had been accomplished with long distance services under FTS2000. Under FTS2000, though, for a time in the late

80s and early 90's we lagged behind the commercial price reductions being achieved by large commercial users. We used the price redeterminations in 1992 and 1996 to turn that situation around, and now continue to set the pricing pace under the FTS2001 program. That experience taught us that we did not want to be in the same position behind commercial users in the evolving local telecom market. In fact, we wanted Federal agencies to realize those savings first.

Our assessment of the market was that competition would come first in major metropolitan areas with large business populations. Industry was targeting the commercial business opportunities in those areas and was building the infrastructure there to deliver services. As we designed the MAA program, we sought to leverage those plans and investments to the advantage of Federal customers and agencies in those locations, and to establish price leadership for local services right from the start. To do that we translated the competitive techniques of the long distance program to leverage them in the MAA competitions. At the same time, we made sure the MAAs were positioned to establish a framework that could meet the evolving data services needs of our customers well into the future. In this way we set out to achieve the program goals of maximizing competition to provide the best services and prices.

The MAAs were designed not just to take advantage of competition, but also to stimulate the development of competition by offering government requirements to

budding metropolitan markets. The MAAs were the first-ever head to head competitions designed specifically for the deregulated local markets – providing an avenue for new market entrants in the form of sizeable government revenue streams in each local market competed. Thus, they also provided an important opportunity for public policy leadership.

Finally, the program crossover provisions are intended to enable the Government to benefit from the additional competitive pressures created through the entry of local providers into the long distance markets as well as other local markets where they were not the incumbent providers. Similarly, crossover anticipated entry of long distance providers into local markets. At the time the strategy was developed, the Regional Bell Operating Companies (RBOCs) were permitted to compete in other local markets and fully expected regulatory relief for entering long distance markets to occur relatively soon. Likewise, at that time, providers such as MCI Metro, TCG, and others were making large investments and were moving aggressively into local markets.

So, the stage was set for the Government to stimulate this emerging competitive local marketplace by fostering new entry into local markets. Mr. Chairman, we jointly crafted a clear and coherent strategy for bringing the benefits of local services competition to government users. And today, four years later, after having put this strategy into motion, and even with the delay in the rollout of competitive local markets, which I will discuss later, I am here to say as I did two

months ago about FTS2001 that we believe the strategy remains fundamentally sound. Our goal of maximum competition to provide the best services and prices is being realized and the strategy has proven to be flexible and able to respond to the changes in the landscape we've seen over these last few years. Let me now review our accomplishments in the MAA competitions.

MAA Acquisitions

Despite the unforeseen changes in the marketplace following development of the strategy, Mr. Chairman, there can be no question that the MAA acquisitions have been a great success. Since 1999, we have awarded 38 contracts in 21 metropolitan areas across the nation. Currently there are six distinct MAA contract awardees competing in the program across those 38 contracts. Of these six winners, two are competitive local exchange carriers (CLECs) and four are incumbent local exchange carriers (ILECs). One of the ILECs competed and won an MAA contract outside of its incumbent territory. So, we have achieved the kind of competitive atmosphere we envisioned in terms of the number and types of competitors within the program.

In every case, we have benefited from those competitive forces in being able to drive prices down significantly. Our price reductions have ranged from 30 percent to upwards of 70 percent depending on the specific MAA and telecommunications services. These savings are based on a comparison of

awarded MAA contract prices versus pre-MAA prices. The pre-MAA prices were already 10 to 15 percent below commercial prevailing tariff rates. And the largest reductions have generally been found in the largest metropolitan areas where the greater percentages of our customers are located. We have calculated that these price reductions have the potential in the first 20 cities to save $1 billion for our existing customer base during the life of the MAA program. The savings are predicated on a model that computed the difference between MAA awarded prices and the referenced prices (i.e., GSA pre-MAA prices or tariff), calculated over the 8 year life of the contracts, using projected contract transition dates, number of telephone lines, and potential growth in data requirements.

Of particular interest to those in the Washington, DC, area was one of our Phase 2 MAA competitions, the Washington Interagency Telecommunications Services (WITS) program, which supports a very large base of 170,000 customers. The WITS2001 acquisition resulted in a price reduction of 46 percent, and in addition has resulted in transforming the program from a government-owned network to a contractor owned and operated infrastructure providing state of the art commercial voice and data services to the many government users in the DC, Northern Virginia, and suburban Maryland areas.

As a measure of that success, we have begun supporting the non-command and control requirements of the Department of Defense (DoD), a brand new customer to the WITS2001 MAA contract. DoD decided to transition 165,000 customers to

WITS 2001 instead of conducting a separate acquisition to replace its existing contract for local service requirements in Washington. DoD estimates it avoided $5 million in acquisition costs and reduced prices by 50 percent compared to its previous contract.

We expect that our success in conducting the MAA acquisitions will continue as the seven additional metropolitan areas we have under competition right now are completed later this year (Detroit, Kansas City, Norfolk, Oklahoma City, Salt Lake City, San Antonio, Seattle). When all 28 metropolitan areas have been completed, close to two-thirds of the federal workforce population will be within reach of an MAA contract offering with competitive prices and service offerings positioned to meet future needs. Moreover, the dynamic vigor of the program is already evident in the type of modifications we have processed for the awarded contracts. These have included voluntary price reductions and the expansion of geographic service coverage areas.

We have had significant success in the MAA acquisitions. However, following the acquisitions are the many significant challenges associated with their implementation. The implementation challenges closely track the slower than expected pace at which competitive markets for local service are developing.

MAA Implementation Progress

In your letter you asked about the status of the three MAA phases and about the effects of regulatory challenges on the program and on our ability to achieve the program goals. Both the MAA acquisitions and the implementations have been occurring within the developing marketplace for competitive local telecommunications. Much of the work of implementation and many of the associated challenges we have been working through are not unique to the program but are common to the experiences of the industry and its customers, government and commercial alike. So, the MAA program status reflects to a great extent the regulatory environment under which the telecommunications industry operates.

Keeping this background in mind let me address the specific status of the MAA program by phase. Phase 1 of the MAA program, the first ever local services competition, consisted of the initial three MAA awards in New York City, Chicago, and San Francisco. As a pilot, this phase was intended to offer a preview of what could be expected from a competitive local services competition.

New York City, Chicago, and San Francisco (MAA Phase 1) have transitioned 14 percent, 46 percent, and 70 percent of the MAA customers, respectively. Program wide implementation challenges are centered on building access, reselling of facilities, and number portability. Other implementation challenges

are city specific. A complete assessment of the state of competitive local services markets and MAA implementation is provided later in this testimony.

Phase 2 of the MAA program includes 18 additional MAAs. Of these 18, Philadelphia is relatively new, and is still in the contractor planning stage. No implementation has yet occurred there. Of the remaining 17 cities, 8 are at 25 percent completion or less; 3 cities are between 25 and 75 percent completion; and 6 cities are at 75 percent or more completion (3 of these 6 have transitioned all customers).

Phase 3 of the MAAs is still in the acquisition phase and we expect to complete those acquisitions this year. Naturally, no implementation activities have begun in Phase 3 yet.

As for your question about the MAA savings achieved so far, this is very difficult to compute for many reasons. To conservatively calculate user savings, we have compared the dominant price element that most of our users focus on, the monthly recurring charges (or line rates) for telephone lines, using our pre-MAA and MAA prices. The pre-MAA prices used to calculate savings were based on current GSA prices or tariff pricing. On this narrow measure alone, we estimate that converted user agencies accrue savings at a rate of nearly $4 million per month. The majority of these savings, approximately $3.7 million, are due to the WITS2001 contract, which is serving over 363,000 lines today. However, the

more than 16,000 lines we have put in service in the other MAA cities are accruing savings at a similar per line rate, and we expect the savings to grow proportionally as the number of MAA lines increases. Based on our early success, we believe that the savings goals of the program will ultimately be realized.

However, calculating savings accurately may be difficult for the following reasons:

- Users may see savings based on monthly recurring line charges and feature charges, but the exact number and types of lines and features may change as the lines are converted from the old contract to MAA.

- Users may also realize savings in usage charges, both because usage rates may be less and because fewer calls incur the charges, making exact comparisons difficult.

- Users may also incur Service Initiation Charges to convert or add lines, but the contractors may waive these if they choose.

The reasons for the mixed results to date in Phase 1 and 2 MAA implementations are many and varied. However, we distinguish between regulatory and program challenges. I will discuss these challenges next by first outlining what we have

learned about the current state of local services and the associated challenges that has presented. Following that discussion I will describe our program-specific challenges.

The State of Competitive Local Services Markets and MAA Implementation Challenges

We all know that the pace of local services deregulation and the associated development of competitive local markets have been much slower than expected. That is clear to anyone who follows this business. The most recent FCC statistics indicate that as of the end of last year, despite a 93 percent jump in lines served in the preceding 12 months, competitive local exchange carriers served only about 8 ½ percent of the telephone lines in the country. And that was before the recent difficulties in the telecom capital markets and the resulting spate of bankruptcies and consolidations in the sector. FTS and our customers have been in the middle of this change and turmoil since the very beginning and have gained some significant firsthand experience as a consequence. At this juncture we are convinced by our experiences that the local competitive environment today is far from mature.

Examples of areas where the state of local services competition has caused significant implementation delays and which remain a challenge for all of us include the following:

Building access rights. While providing service to the outside of a building is a critical facet of infrastructure deployment and delivering service, it is not complete without provision of in-building infrastructure or access to what is already in place. The labyrinth of rules associated with ownership of wiring inside the building has provided ample opportunities for protracted delays between incumbent LEC providers and MAA competitive LEC providers. Our experience has shown that carriers will continue to contest last mile issues down to the last inch. In any given building, we may find ourselves caught up in disagreements between our contractor, the incumbent LEC, and the building owner. We may need to negotiate with multiple parties to determine who owns what, whether existing wiring is adequate and, if not, whose responsibility it is to make it so, and if compensation is required, to whom and at what levels. Procedures for handoff and responsibilities after handoff may need to be agreed upon. Then we must coordinate tasks and schedules, all while minimizing disruption to our customers. These negotiations have been time-consuming, contributing to delays in implementation. And we in government are not alone in finding these issues troublesome. For example, in the FCC's Competitive Networks Proceedings, which examined this area, over one thousand pleadings were filed with the FCC, the most ever filed for an individual proceeding. This process began in July 1999 and only recently has the FCC finalized the initial rules for telecommunications access to commercial buildings. But many of the issues are far from settled and further rulemaking is planned.

Reselling. Certainly not all MAA competitors could be expected to own facilities throughout a competed metropolitan area. So, we expected that the new entrants would offer a combination of services from their own facilities as well as those derived from reselling facilities of the ILEC. This battle and the related battles over access to the local loop have been the principal battlegrounds of local competition nationwide. Extensive negotiations and coordination have been required among FTS, the MAA contractors, and the ILEC to deliver the resold services, and these efforts have resulted in delays. Furthermore, services resold from the ILEC by the MAA contractor complicate troubleshooting and trouble handling procedures. Across the industry, doubts about the economic viability of resale have grown considerably, in sharp contrast to the views of a few years ago.

Number Portability. In the local service arena, local number portability (LNP) is a required feature of deregulation. LNP is intended to eliminate a key disincentive to changing providers. It requires that numbers be portable between carriers so the customer may switch providers without the inconvenience and cost of changing phone numbers.

The availability of local number portability was a key criterion for determining where we would conduct MAA competitions. However, while we have conducted competitions only where number portability was scheduled to be available, as it

turned out across the industry, implementing number portability has been very difficult. The challenges and the time and effort have been greater than anticipated. Implementing local number portability requires carefully coordinated database changes and provisioning steps involving the customer, the new and old service providers, long distance carriers, and the Number Portability Administration Center (a private company which transfers customers' telephone numbers between telephone companies). A complete and accurate telephone number inventory is vital to insure continuity of service. Several database "scrubs" are generally needed prior to LNP order commitments. Miscues at any point can cause delays and technical problems leading to service outages or non-functional phone numbers. We have experienced many of these problems in MAA implementations, again a contributing factor in MAA implementation delays.

Customer Issues. While we have very attractive services and prices, changing to a new service provider can be daunting. Typically, existing telephone equipment and provider arrangements have been in place for long periods of time, and making changes introduces some risks. FTS understands this, and we work diligently with our customers and industry partners to manage the implementation process to minimize service disruption to our customers.

In our non-mandatory environment agencies are not required to use the MAA contracts, and deciding to do so usually requires extensive coordination and involvement on their part. However, we help our customers throughout the decision process with price quotes, assessments of alternatives, risks, tradeoffs and benefits. In many cases transition requires significant or complete equipment replacement (including the telephone instrument itself), cable and wiring changes, retraining personnel on new equipment and services, re-tooling order processes and trouble reporting, and establishing new service provider relationships.

Needless to say, it is easy to see why customers might view this process as a daunting one, despite our best efforts to smooth their path. As a result, for some customers this is not a course they prefer, and is in fact one of the difficulties that are part of the fundamental market change we are experiencing.

Program Specific Implementation Challenges

Clearly the regulatory environment has had a major impact on MAA implementation progress. In addition there have been program-specific challenges that have contributed to the implementation delays. Such challenges have generally been associated with the activities that follow each MAA award. There are three major stages of post-award activities:

- Contract initiation
- Contractor planning and deliverables
- Customer involvement and buy-in

The first stage, contract initiation, involves considerable coordination between FTS and the contractor. In addition, roles and responsibilities are established for FTS and contractor teams. This stage includes issuing the formal notice to proceed, updating the ordering and billing system and price analysis tools with the final negotiated prices and other contract administration data, establishing FTS contract fees, and establishing the contract management structure. At this stage the contractor is staffing critical project management, technical, marketing positions and is responsible for identifying its local team in the MAA city.

This same process must repeat itself with each contractor, in each MAA. Care must be taken since actions taken by either the contractor or FTS in an individual MAA must be assessed for national program implications. Because multiple awards have been made in multiple cities at nearly the same time, this process has taken significantly longer than anticipated.

The second stage, contractor planning, includes activities largely to be performed by the contractors with FTS oversight and approval. They must submit various deliverables to FTS, including implementation plans, infrastructure build out plans, proposed tariff filings, plans for identifying and handling state and local

taxes, marketing plans, and other related documents. This stage also has taken longer than expected for a variety of reasons in each MAA. Tax issues, infrastructure build out, and time required to deliver acceptable planning documents have been particularly time consuming, and in some cases have stalled MAA implementation for extended periods. In addition, while some contractors have used more or less uniform approaches across multiple MAA contracts, other contractors have provided very different approaches from one MAA contract to the next.

In the third stage of post award activities, customer involvement and buy-in, the agencies may select an MAA contractor after MAA contract holders are given a fair opportunity to be considered for work. This process is managed by FTS in consultation with the agencies. FTS typically must coordinate wider agreement on the MAA contractor selection among multiple agencies at each building or campus served by an MAA. This is needed in order to implement the most cost-effective *government-wide* solution for delivering telecommunications services to those locations. Once that coordination is accomplished, agency orders may be issued. FTS then works with both the customers and contractors to plan, schedule, coordinate and execute the cutovers. Delays in any of these three stages can and have caused extensions to overall project schedules.

In summary, both regulatory and program activities have been significant sources of implementation delays. However, let me emphasize that while I have

separated implementation activities and delays into those related to the regulatory environment, and those related to the MAA program, the lines between these activities are not so clearly drawn. Many MAA program issues, such as contractor build out, tariff filings, tax planning, and others are also very closely tied to the regulatory environment. Likewise, for example, the customer issues associated with the new regulatory environment are also very closely tied to the establishment of the new MAA program. Consequently, the nine months we anticipated would be needed to address these activities have been insufficient to resolve many of the problems encountered by all parties involved – industry, customers and FTS.

To address these and other implementation challenges, over the last year FTS has strengthened MAA national program management, centralizing responsibility for issues with broad program implications. Legal and contract management support has been increased significantly. National focal points by region and by industry partner help maintain a consistent national perspective for decisions and for communications. MAA pricing analysis tools have been enhanced to better support fair consideration, business case development and customer buy-in. Substantial effort has been devoted to communication and cooperation between the GSA Public Building Service and FTS throughout the country, and resulted in issuance of a joint policy on access to buildings and MAA implementation and development of a national licensing agreement with one of the MAA companies. Early efforts to share lessons learned in the first cities facilitated the work of other

regions and leveraged experience. Today, all regions are now involved in MAA implementation, most with multiple cities, and all industry partners have awards in multiple regions. With this initial learning curve behind us, and a large baseline of knowledge and experience with this new environment in place, we expect implementation to be smoother and faster as we complete implementation and as additional cities are added to the program.

FTS MAA Program Coordination

FTS developed the MAA goals and strategy with the advice and counsel from industry, customers, and this committee. From inception, through proposal evaluation, contract award, and implementation, FTS regional offices have been an integral part of the MAA program. While the MAA program is managed nationally, it is implemented locally at the regional level, placing decision-making and project management authority close to the customer. Therefore from the outset of the program regional participation has been critical.

To ensure MAA program consistency, the Program Management Office (PMO) was created to provide nationwide coordination of the MAA Program. In particular, the PMO provides coordination between the FTS regional offices and the FTS headquarters in their various program roles.

FTS headquarters offices are responsible for the solicitation development, evaluation, contract award and support for implementation activities. The FTS regional offices are responsible for developing city specific requirements and for front-line post-award implementation activities including managing the process used to select among MAA contract awardees.

During implementation, the PMO provides program guidance and oversight to FTS headquarters, regional personnel and industry partners. Since this is a national program, communications and coordination among all three are essential to ensure program continuity and consistency.

The following is a list of post-award activities performed by the PMO in conjunction with the headquarters, regional staff and industry partners:

- Conduct post award conferences
- Support customer outreach and marketing efforts
- Provide and maintain customized relational database for MAA pricing
- Coordinate rates and billing interface requirements
- Coordinate and facilitate resolution of contract interpretation issues
- Coordinate contract modifications with national contracting officers
- Monitor and report on implementation progress

Most importantly, regular communication is maintained by the PMO via scheduled or issue specific conference calls to track progress, identify issues, and resolve implementation problems. Regional and headquarters personnel work closely with the PMO on contract interpretation, scope, modifications, and other issues that have program-wide implications.

GSA Fees

In your letter you also asked about our fee structure. Basically, the total cost to the customer for service is a combination of the MAA contractors' price and FTS direct and indirect costs. Direct costs consist of personnel providing customer support, while indirect costs consist of acquisition support, national and regional management, General Management and Administration (GM&A) allocations, and financial systems for billing, invoicing, and inventory. These costs are spread across the MAA customer base in each MAA.

FTS has overall responsibility for the MAA program. In this role we provide the following value-added capabilities and functions:

- National MAA Program Management
- Acquisition and Contracts Management
- Customer Accounts Management
- Full Life Cycle Services Management
- Transition and Implementation Management

I have included separately with my testimony a list of functions (Attachment 2).

Clearly, based on the services required of and provided by FTS, one indisputable fact associated with providing local telecommunications services and a nationwide local program is that it is resource intensive. This was true even before adding the complexities of deregulation. Part of our response to the difficulties encountered with implementation of the MAA contracts has been to apply additional resources to get problems fixed and projects moving. FTS is a fee for service organization. We do not receive directly appropriated funds. Instead we add a fee to the contractor payments made by our customers from their appropriated funds to recover our actual costs incurred in administering the program.

Local service is by its very nature a labor-intensive operation whether managed by FTS, a federal agency, or a large private business. Local services involve the myriad physical cables and wires that connect the individual subscribers' telephones and computers to a telephone company's central office, then to the public switched network. The churn of daily office activities directly affects management of local service: office moves, new employees, changes in individual responsibilities, promotions and retirements, etc. Any and all of these activities can result in rewiring, telephone number moves and changes, establishment or discontinuation of service, ordering or canceling features, and other significant changes.

FTS provides skilled contracting, technical, and management resources to develop, implement, and manage contracts that supply the local loops, local transport, inter-exchange access for FTS2001 services, and customer telephone equipment of various kinds. FTS personnel serve as the customer advocate and act as the liaison and facilitator with the MAA service providers.

Even with the resource requirements of the MAA program, we have been working hard to match the dramatic success of our price reductions on many MAA contracts with significant reductions in our fees. We are working to reduce our costs and, in turn, the fees we charge our customers. We have a track record of doing so since the outset of the non-mandatory local services program. Over the last 5 years we have reduced our fees by about 30 percent and we are committed to being vigilant in driving costs down in the future.

Despite these reductions, however, the much lower service prices achieved in the MAA acquisitions mean that the percentages represented by the fees have increased. For example, if we charged $5 on top of a $25 monthly phone bill in the past, that represented a 20 percent fee. Now, if we charge a dollar less, or $4.00 on a $10.00 phone bill, the fee becomes 40 percent. Thus, at first glance, an actual decrease in fees of 20 percent can erroneously appear to be more than a two-fold increase.

Expressed as percentages, fees vary from 25 to 80 percent, but in actual dollars the range is from $2.50 to $6.00 per line. These represent decreases from pre-MAA fees in all but one city. I have provided fees by city in Attachment 3.

Nevertheless, from the customer and taxpayer's perspectives, total costs are dropping dramatically. In San Francisco, for example, the monthly business line rate including our fee has been reduced from $28 to about $8. Other metropolitan areas also show bottom line costs dropping significantly.

Positioned for the Future

Based on the acquisition successes and the hard fought implementation progress we have had, we believe there is no other program better positioned to meet the future local competitive environment than the MAA program. We continue to hold competitions, work as hard as we can to attract customers to the program, install and implement services under our contracts, refresh and expand the offerings available to our customers, and stimulate additional competition through the program crossover feature.

Crossover, in particular, remains a powerful tool that we are using in the local markets to stimulate additional competition. This is especially true in markets with a single awardee, like New York City, where the first crossover award was made in March. We had opened the first three metropolitan areas for crossover

and were evaluating multiple proposals for crossover modifications in Chicago and San Francisco and expecting to receive more in the coming months. However, as the result of recent questions and issues from industry, and in response to the interest of this committee, we have put further crossover action on hold for now. As I mentioned in the earlier hearing, we will actively seek industry input. We are once again working with the Industry Advisory Council (IAC) Telecom Special Interest Group to facilitate broad industry input on our current crossover plans and to ensure all interested parties have a chance to participate. The first formal meeting is scheduled with that group in about two weeks, and I will be listening closely to the remarks of your industry panel members today.

Of course one of the key ingredients to our success in the past has been our active customer involvement. We are also engaged on the issue of crossover with our customer "board of directors", the Interagency Management Council (IMC). We intend to involve them every step of the way.

Finally, we have been working closely with GAO in their review of the MAA program and appreciate their comments and any others that the Members of this Committee may have.

Conclusion

Mr. Chairman, as I've said already, despite the slow pace of market development, I believe the strategy we jointly crafted is as sound today as it was when we developed it 4 years ago. The MAA acquisitions continue to be successful in terms of new providers, services and prices. We have brought explicit competition to local markets for the first time ever through multiple award contract vehicles. We have brought agencies real choice of providers, and we have state of the art service offerings to satisfy the needs of a modern and increasingly sophisticated government customer base.

We have been challenged in delivering services by the still developing local telecom market and a complex program. It may take longer than anyone expected to fully achieve the benefits of local services competition and we have more work to do. However, we cannot afford to turn back the clock and retreat to the days of the single monopoly provider. We have taken the lead in stimulating competition in the local arena and have gained unparalleled and unique expertise as a result. We have developed a set of contracts with attractive prices, the promise of considerable savings, and the benefits of advanced service delivery platforms to meet future needs. For this reason, we remain committed to the MAA program and its competitive structure, and intend to make adjustments as necessary to reflect changes in the market place as required to enable our customers to obtain the best services possible.

Mr. Chairman, I look forward to your continued leadership and support and I am happy to address any questions you have at this time.

J.10 DEVELOPMENT OF FTS PROGRAM GUIDING PRINCIPLES

Prior to the release of this RFP, extensive exchanges of information and views took place among Congress, Executive Branch agencies, and industry. These exchanges included formal Congressional hearings, open public meetings, letters and other written materials, and private meetings arranged under the auspices of Congressional oversight committees.

J.10.1 Statements of Principles Released February 18, 1997 and April 4, 1997

A set of general principles intended to broadly guide the development and implementation of the FTS telecommunications program emerged from these exchanges. These principles are intended to convey the consensus that emerged between the Legislative and Executive branches. Attachments J.10.1-1 and J.10.1-2 reproduce the two documents that encapsulate these principles. These attachments are provided for information purposes only.

The principles represented in Attachments J.10-1 and J.10-2 have been incorporated, using contractually-correct terms, in the appropriate sections of this RFP.

The Government expects that agencies acquiring local service for non-MAA locations below the threshold (referred to in Principle 15.8 of Attachment J.10.1-2) will follow established contracting principles and examine all options, including FTS2001 contractors, MAA contractors, and other potential providers, including their LECs.

J.10.2 Forbearance Period

Following the release of the documents represented in the above attachments, further discussions resulted in the emergence of one further point of consensus, as follows. No contract modifications for optional local services in an MAA area will be executed to an FTS2001 contract or an MAA contract before one year after the relevant MAA award. In addition, no contract modifications for optional local services in a non-MAA area will be executed to an FTS2001 contract or an MAA contract before one year after any competitive award of such services. Similarly, the Government will not execute contract modifications to an MAA contract for optional long-distance services before one year after the initial FTS2001 award.

J.11 INFORMATION EXCHANGE GUIDE

The Information Exchange Guide is provided as a part of this contract.

Attachment J.10.1-1
Statement of Principles Released February 18, 1997

Federal Telecommunications Service Program
Statement of Principles
Page 1 of 2

FTS Program Goals

1. Ensure the best service and price for the Government
2. Maximize competition

Program Strategy

In general, the Government's goals will be met by:

- Multiple, overlapping, staggered contracts
- Comprehensive and niche contracts
- Awarding minimum revenue guarantees (e.g., $1B in FTS2001) to vendors that compete and win
- Leveraging the Government's large traffic volumes
- Aggressively pursuing Metropolitan Area Acquisitions (MAA) and other opportunities to maximize competition

Specifically, the Government will:

- Award multiple contracts for FTS2001
- Award MAA contracts in multiple areas, multiple contracts may be awarded in any particular area at the option of the Government
- Award niche contracts (e.g., wireless) to focus competition where and when needed
- Later, award multiple FTS-TS contracts for required end-to-end services, timing of award is at the discretion of the Government

Required and Optional Services

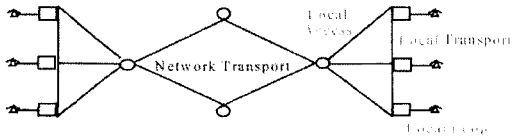

FTS2001 Contracts
Required services
Network transport
Local access
Optional services
Local transport
Local loops

MAA Contracts
Required services
Local loops
Local transport
Local access
Optional services
Network transport

Attachment J.10.1-1
Statement of Principles Released February 18, 1997 (Concluded)

Federal Telecommunications Service Program
Statement of Principles
Page 2 of 2

For FTS2001 and MAA Contracts

1. Vendors must bid required services.
2. Vendors must meet all requirements specified in the appropriate RFP (e.g., technical specifications and price structures).
3. The vendor may choose to offer services from owned facilities or as a reseller. The Government's evaluation of services offered will be facility-neutral.
4. Compliance with the RFP requirements for the required services and evaluation of the unbundled prices for the required services, using the traffic models provided by the Government, will serve as the sole basis of the contract awards.
5. The Government's sole obligation under any contract will be to meet the minimum revenue guarantees' (e.g., the Government does not plan to manage a revenue or traffic distribution among the contracts).
6. Contractors (i.e., vendors who have won either an FTS2001 or an MAA contract) may offer optional services. Contractors determine which specific optional services to offer. Contractors determine when (i.e., at time of submission of proposals or anytime during the contract life) and where to offer optional services.
7. Optional services must meet all requirements as specified in the appropriate RFP (e.g., optional local transport service offered by an FTS2001 contractor must meet the technical specification for local transport in the MAA RFP).
8. Prices, whether offered for required or optional services, must comply with the price structures contained in Section B of the appropriate RFP (e.g., optional local transport service offered by an FTS2001 contractor must comply with the price structure for local transport in the MAA RFP, optional network transport service offered by an MAA contractor must comply with the price structure for network transport in the FTS2001 RFP).
9. Individual price elements (i.e., unbundled prices) are required for all required and optional services.
10. Contractors may also offer bundled prices. The price structure will allow fixed discounts for optional bundles offered by the contractor. (This is structurally similar to the scenario based discounts used in the FTS2000 Year 7 Price Redetermination.) However, the sole basis of contract award is per item 4 above.
11. MAA contractors may elect to offer any MAA-required service, on an optional basis, outside of the awarded MAA area.
12. MAA contractors may offer in-region network transport services (and submit technical and price information) on a contingent basis for ordering immediately upon regulatory approval.

Note: Principle 12 above was deleted and replaced by a new Principle 12 in the document released on April 4, 1997 (Attachment J.10.1-2).

Attachment J.10.1-2
Statement of Principles Released April 4, 1997

The following principles supplement the 12 Principles issued on 18 February 1997.

Original Principle 12 is hereby deleted and replaced with the following new Principle 12:

12. The contract duration of the FTS2001 and MAA will be the same. Specifically, the contract duration for the FTS2001 and MAA contracts will be 4 base years and 4 one year options.

13. No work will be contracted for under any FTS contracts that is prohibited by any federal or state laws.

14. There are no minimum revenue guarantees (MRGs) for optional services.

15. Award process for MAA contracts:

    15.1 The Government will issue a request for qualification statements to which interested vendors may respond. The Government will use the standard RFP structure to enumerate its requirements. Specific price information will not be requested by the Government as part of the qualification process. Vendors may submit qualification statements at any time. However, the Government will specify a due date for qualification statements for each specific MAA. The Government reserves the right to re-examine its requirements or require re-qualification.

    15.2 The qualification statements will be required to address, in appropriate detail, the Government's requirements. The qualification statements must state the specific NPAs and NXXs in which the vendor is seeking to be qualified.

    15.3 The Government will evaluate the qualification statements. Vendors who are qualified will be placed on an MAA Qualified Vendor List.

    15.4 The Government will conduct competitions for each of the designated MAAs. The Government will specify the MAA-specific requirements, as well as the traffic model for that MAA, in an RFP issued for each MAA.

    15.5 Vendors on the MAA Qualified Vendor List may respond to the MAA RFP. Proposals shall include a price proposal based on the traffic model, an MAA-specific transition plan, and a proposal responsive to any other requirements unique to the specific MAA.

    15.6 Based on an evaluation of the MAA-specific proposals, the Government will award a contract(s) and an MRG(s) for that MAA.

    15.7 In areas designated as MAA areas, agencies will typically participate in the MAA-specific competition to be conducted. However, an individual agency may elect to compete its requirements prior to the conduct of the MAA.

Attachment J.10.1-2
Statement of Principles Released April 4, 1997 (Concluded)

15.8 In areas not designated as MAA areas, the Government will conduct a competition for services in that area and will accept proposals from any firm on the MAA Qualified Vendor List. The Government may elect not to conduct such competitions for requirements below a specified dollar threshold. This threshold will be determined at a later date by the GSA with input from the IMC and will be set to ensure that the Government's cost do not exceed the possible savings.

16. Optional services (i.e., for long distance services or for local services in other areas) may be offered under the following conditions:

16.1 Only contractors (i.e., those companies with either an FTS2001 or an MAA contract) may offer optional services.

16.2 Optional services may be added to the contract as modifications within the scope of the FTS2001 and MAA contracts.

16.3 The Government will not require service or geographic ubiquity on any optional services.

16.4 MAA contractors seeking to offer long distance services will submit prices, as well as a technical/management response based on the FTS2001 RFP, which will be evaluated in the contract modification process.

16.5 MAA contractors seeking to offer local services (i.e., in areas other than their awarded MAA area) will submit prices, which will be evaluated in the contract modification process.

16.6 FTS2001 contractors seeking to offer local services will submit prices, as well as a qualification statement based on the MAA request for qualification statements, which will be evaluated in the contract modification process.

16.7 Any contractor may offer optional services in an area after the competition is completed for that area.

Attachment 2
FTS Value Added Activities

National MAA Program Management

- program management and oversight
- ensure nationwide program consistency
- regional coordination and communication
- exercise forbearance options
- technology assessment
- program planning and strategy
- resolve contract interpretation issues
- resolve contract disputes and discrepancies
- modify contracts
- audit actions and technical support

Acquisition and Contracts Management

- Contract administration
- identify contract interpretations issues to national contracting office
- initiate contract disputes and discrepancies to national contracting office
- initiate contract modifications
- delegate COTR authority
- delegate GDR authority
- technical support
- review all contract deliverables
- pre and post award customer outreach
- price analyses
- audit actions
- contractor relationship maintain liaison with National Program Management Office

Customer Accounts Management

- electronic billing, invoicing, inventory
- electronic order processing
- financial management and reconciliation

Life Cycle Services Management

- customer consultation
- requirements analysis
- customer training
- day to day trouble resolution
- system configuration/upgrades
- vendor coordination
- configuration and inventory management
- contractor relationship (e.g. Winstar license agreement)

Transition and Implementation Management

- fair consideration analysis
- pre-cutover planning
- on-site cutover support
- post-cutover testing and acceptance

Attachment 3
MAA Fees

MAA Cities	Total Customer Surcharge $	Total Applied Fee %		25-35%	36-45%	46-55%	56-65%	66-75%	76-85%
Albuquerque	5.53	32%		7	8	3	0	0	2
Atlanta	3.20	35%							
Baltimore	4.07	84%		*Number of cities with total					
Boise	4.28	29%		fees in these ranges					
Boston	4.53	55%							
Buffalo	4.32	54%							
Chicago	1.47	43%							
Cincinnati	2.54	39%							
Cleveland	5.89	40%							
Dallas/Fort Worth	3.03	32%							
Denver	6.10	44%							
Indianapolis	2.46	28%							
Los Angeles	3.32	53%							
Miami	4.15	40%							
Minneapolis-St. Paul	5.04	39%							
New Orleans	4.25	32%							
New York	1.64	43%							
San Francisco	3.34	80%							
St. Louis	3.49	27%							
WITS/NCR[1]	2.85	36%							

[1] Weighted Average

Mr. TOM DAVIS OF VIRGINIA. Thank you. Ms. Bates is welcome. I also want to recognize Steve Perry, the new head of the General Services Administration who is in the audience. Congratulations on your appointment and your confirmation. We look forward to working with you. Your staff is doing a good job.

Louis, you are on.

Mr. DEFALAISE. Thank you.

Members of the subcommittee, I appreciate the opportunity to be here on behalf of the Executive Office of the U.S. Attorney's Office and for the 93 U.S. attorneys.

We are very concerned as a consumer with telephone operations for our several hundred locations, our offices and connected locations throughout the country, all the way to Guam where we have to usually call at 6 p.m. because it is 8 a.m. there.

Our concern to our personnel, the approximately 5,000 Federal prosecutors and litigators, is that they primarily be free to do what they are being paid to do and that is prosecuting cases and litigating on behalf of the Government. Their only concern when they pick up the phone is that there be a dial tone and reliable service.

From the central operation point, since we have a very deliberate policy of keeping our headquarters personnel very low so that we can put more people into the field, we are concerned about being able to get a turn key operation where we can buy the service and expertise so that our staff doesn't have to deal with it and the price. Obviously the more resources we can save from an operational side is more money we can spend doing what we are intending to do, protect the public weal.

We have had a number of offices that have completed the transition to the MAA carriers. In our experience, we have had a few technical difficulties in a couple of instances where there have been delays and my staff advises me in terms of the types of infrastructure and regulatory questions that existed, that this is not unusual in terms of what we experienced in the past. We are constantly updating our systems, doing it all over the country so we seem to be in a constant process of change and we encounter these things quite often.

The one good thing we can say about this program in the one location where we now have sufficient data to analyze the cost impact is that it has been highly successful. That is in the Islip location in New York where I am informed we had been paying $35 a month a line and now we are down to about $10 to $12 a line. So while we are interested in the issue of what GSA is charging us, the savings has been so great in that location that we are very pleased by the results and the outcome. By the fact we can take it as a turn key operation, we don't have to have additional numbers of staff to deal with these issues directly but all of these services are provided to us by the GSA.

We have had some difficulties in a couple of locations, but I have been informed by our staff we think those are manageable ones. With the request that the longer statement be included in the record, I would be happy to answer any questions.

[The prepared statement of Mr. DeFalaise follows:]

Department of Justice

STATEMENT

OF

LOUIS DEFALAISE
ACTING DIRECTOR
EXECUTIVE OFFICE FOR UNITED STATES ATTORNEYS

BEFORE THE

SUBCOMMITTEE ON TECHNOLOGY AND PROCUREMENT POLICY
COMMITTEE ON GOVERNMENT REFORM
UNITED STATES HOUSE OF REPRESENTATIVES

CONCERNING

METROPOLITAN AREA ACQUISITION PROGRAM

PRESENTED ON

JUNE 13, 2001

Statement of Louis DeFalaise
Acting Director
Executive Office for United States Attorneys
United States Department of Justice
Before the Subcommittee on Technology and Procurement Policy
Committee on Government Reform
June 13, 2001

Mr. Chairman and Members of the Subcommittee on Technology and Procurement Policy:

Thank you for the opportunity to share with you the United States Attorneys' experience with the Metropolitan Area Acquisition (MAA) program.

The Department of Justice supports the MAA program's goal, which is to provide government agencies the best local and regional telecommunications services at the best price while maximizing competition for services. Under the MAA program, GSA provides for competition among telecommunications companies in individual contracts in various metropolitan areas across the country. We are pleased to provide you with information to assist you in reviewing the transition to MAA carriers and in analyzing the overall implementation effort.

The Department of Justice is comprised of many offices throughout the world, including the United States Attorneys Offices in 93 federal judicial districts. The U.S.

Attorneys Offices, widely dispersed and of varying size, have acquired experience with the conversion of existing telephone services in their offices to GSA MAA program providers. As of today, several United States Attorneys Offices have completed the transition to MAA carriers. Several others are in the process of transition.

The Department of Justice and the United States Attorneys look forward to the MAA program as a vehicle to provide increased opportunities to receive quality telecommunications services at reduced costs over current charges. Each contract in this program appears to provide comparable services at significant discounts from existing costs. The conversion to MAA providers has been slow in certain locations, but these delays have not been unexpected. As with most telecommunications implementations, there are problems that result in both anticipated and unexpected delays.

What problems have impacted your ability to transition in MAA program cities?

If we take the New York region as an example where the incumbent telephone company was not the MAA provider, we can see that there have been delays because of several factors, none of which was a surprise. The first and most obvious factor relates to the congested state of existing telecommunications infrastructure in the city and the adjacent localities. In the New York area, both underground facilities and building

points of entrance are congested. As a result, no matter what services have been required in the New York City area, there have been delays in receiving them. Although there has been a rush to enlarge capacities to deliver the increasing demands for bandwidth, the demand has outpaced the ability of telephone companies to expand the underground cable/fiber infrastructure.

Another vivid example of the consequence of increased demand for existing facilities is the disruption of the streets in Washington, D.C., caused by telecommunications companies. Throughout the country, other factors, including the demand for switch ports and limited resources in densely populated areas, also affect the pace of transition.

Adding to the problem of infrastructure facilities is the lack of basic infrastructure systems within most older buildings – including U.S. Attorneys Offices – in densely populated areas of the country. Where this occurs, even if service is available at the entrance of a building, it is not unusual that there would be no duct space available or inside wire capacity remaining for the service to be brought into the controlled space of a U.S. Attorneys Office. These problems are less pronounced in less populated areas. In the New York region, for instance, it was possible to install the MAA dial tone in the new courthouse in Islip without the aforementioned delays. The courthouse was a new

structure and the lead times were adequate. There was no issue related to a lack of facilities, since new facilities were required to service the building and were installed during the construction phase of the building.

In your view, has there been consistent communication between national GSA and the regional offices on contract administration?

It is very difficult to gauge the consistency of communications between national and regional GSA Offices on contract administration. The Department of Justice and United States Attorneys have a very positive relationship with GSA headquarters. The United States Attorneys, since they are geographically dispersed, have closer relationships with their regional GSA offices. In any event, the United States Attorneys are always seeking to reduce costs associated with running an office, including the delivery of dial tone service. They consistently press GSA for assistance with MAA service and pricing. United States Attorneys have found that the GSA Regional offices to be supportive of the MAA. That indicates to us that GSA leadership at the headquarters level is supportive, as well.

Has GSA, in its regions, been able to resolve transition difficulties in a timely manner?

While it is difficult to define what is "timely" when it comes to resolving telecommunications transition problems, in most instances, the answer would be "yes." For those problems that have been within GSA's control, the resolutions have come rapidly. One example occurred during the loss of long distance services during the Denver transition; long distance was restored within a day or two. Other locations report the transition to have been seamless, for the most part, with minor problems rapidly resolved. In Islip, for example, the MAA lacked the required switch capacity. Service nevertheless was provided in a timely manner and did not delay the move into the new facility. As mentioned previously, for older facilities with typical telecommunications infrastructure deficiencies, delays have occurred. In White Plains, New York, GSA has not had control over the speed at which the vendor could augment the capacities required to resolve a problem of insufficient port capacity. Nearly 18 months ago, the MAA vendor discovered that it lacked adequate ports to deliver the intended service to the White Plains United States Attorney's Office just days before the intended cutover. Service is now expected to transition within a month or two. On the other hand, in one location, service quality has been so poor that the United States Attorney's office has requested GSA to reverse the transition.

What recommendations would you make to GSA to improve the program in MAA cities?

United States Attorneys use GSA-provided telecommunications services in nearly every city in the United States. As a result, regional GSA offices maintain inventories of United States Attorneys' circuits, and possess full costing data for those locations. It would be beneficial if GSA would prepare cost comparisons up-front to demonstrate the level of savings that the MAA program could provide a particular office for equivalent or improved services. This simple step, if taken in advance of a promotional visit to a U.S. Attorney's Office, would reduce the amount of time needed to make a decision and to effect a transition.

In our experience, marketing should always stress the potential for overall government savings and value, rather than just best cost. Some regions do a better job of marketing in this manner than others, but all are using marketing effectively.

To date, has there been a net cost savings to user agencies? Do you believe the goals of the program are on track? Do you believe GSA is providing the appropriate level of service in exchange for the contract management fee that it is charging?

Using the New York region as an example, for the United States Attorney in the Islip courthouse, the overall cost savings reflect at least a sixty-five percent reduction from costs at the former locations in Hauppauge and Garden City.

Despite the problems inherent to the entire telecommunications industry, the scarcity of facilities that make up the infrastructure supporting the program, and delays that accompany large service transitions, the program is moving ahead at a predictable rate. Large telecommunications transitions often take time to ramp up. The MAA is no different. The progress of FTS2000 was slow to start and – like the MAA – picked up speed as the program matured. Naturally, the Department of Justice would like to benefit from lower prices immediately, but in reality we realize that it will take some time to achieve the cost savings we expect.

In many cases, the GSA management fee is not clearly indicated in line rate quotes. The Department's goal -- to obtain the highest quality telecommunications at the best cost -- can be achieved, using the MAA program, as long as the rates charged are significantly lower than existing prior rates for similar services. The GSA fee added is not as important as the value added services they need to provide along with lower overall costs. The value added services GSA provides are invaluable for transitions that are often extremely complex. GSA must assure the customer that, when the cutover is

performed, the service will work. When compared to the pre-MAA cost of a telephone line charge, and for management of number portability alone -- coupled with the overall savings in line charges -- it appears that the service charge GSA receives is reasonable. However, the Department of Justice does not have adequate information to assess the actual percentage of markup that GSA applies to cover its management fees in each MAA jurisdiction.

Mr. TOM DAVIS OF VIRGINIA. Thank you.

Commander Day, thank you for being with us.

Commander DAY. Mr. Chairman, distinguished members of the subcommittee, the Coast Guard took advantage of the GSA MAA Program when we learned of its existence through GSA, region II in New York in July 1999. A thorough review by my staff, which is responsible for the telecommunications services in the New England Region, basically found the pricing was extremely attractive compared to the services we had before. On average we acheived a 76.5 percent savings on our analog telephone lines.

Based on those indicated recurring savings, I initiated action to move with our MAA Program with region II. We started in the October 1999 timeframe and started moving forward with the contractors in cutting over Coast Guard lines. Our extensive command post in Staten Island, NY, has roughly 751 lines servicing that area.

We did have some problems. There were problems during the initial transition and recurring problems over a period of 4 or 5 months we had minor outages here and there but then we did have one major outage in April 2000 which required some attention by both GSA personnel as well as the contractor at the time. I had a joint meeting with these personnel, and requested understanding of the severity of the potential impact on Coast Guard operations. We requested rapid resolution. We had very good communication between all three parties. I was able to get things cleared up in terms of a pathway to make sure we no longer had these types of issues. Within a 2-day period, all the problems had been resolved. Since that time period, we have experienced essentially 18 months of very good service under the MAA Program and are experiencing savings of $150,000 per year recurring, which is why I started this initiative.

That is all I have. I appreciate the opportunity to speak before the subcommittee and I would be happy to answer any questions.

[The prepared statement of Commander Day follows:]

U.S. Department
of Transportation
**United States
Coast Guard**

Commandant
United States Coast Guard

2100 Second Street, S.W.
Washington, DC 20593-0001
Staff Symbol: G-ICA
Phone: (202) 366-4280
FAX: (202) 366-7124

DEPARTMENT OF TRANSPORTATION

U. S. COAST GUARD

STATEMENT OF

COMMANDER ROBERT DAY

ON

THE GSA METROPOLITAN AREA ACQUISITION PROGRAM

BEFORE THE

SUBCOMMITTEE ON TECHNOLOGY AND PROCUREMENT POLICY

COMMITTEE ON GOVERNMENT REFORM

U.S. HOUSE OF REPRESENTATIVES

JUNE 13, 2001

DEPARTMENT OF TRANSPORTATION
UNITED STATES COAST GUARD
STATEMENT OF
COMMANDER ROBERT DAY
ON
THE GSA METROPOLITAN AREA ACQUISITION PROGRAM
BEFORE THE
SUBCOMMITTEE ON TECHNOLOGY AND PROCUREMENT POLICY
COMMITTEE ON GOVERNMENT REFORM
U.S. HOUSE OF REPRESENTATIVES
JUNE 13, 2001

Good afternoon, Mr. Chairman and distinguished members of the Subcommittee. It is a pleasure to appear before you today to discuss Coast Guard participation in the General Services Administration's Metropolitan Area Acquisitions program.

In July 1999, GSA Region Two in New York announced the award of the Metropolitan Area Acquisition (MAA) contract to AT&T communications. United States Coast Guard Electronic Systems Support Unit (ESU) Boston, having responsibility for Coast Guard telecommunications systems support in the New York region, reviewed the services and pricing made available from this contract. Comparison of MAA contract pricing against the recurring billing for existing Bell Atlantic (the provider for Coast Guard units in New York at that time) indicated that MAA offered the Coast Guard significant recurring savings. ESU Boston entered into discussions with GSA Region Two to implement MAA for Coast Guard commands in New York. The facilities to be serviced included our primary New York command (Activities New York) located at Fort Wadsworth on Staten Island, Coast Guard offices located at the Battery Building on Manhattan, and several Coast Guard vessels and units located in the MAA area.

The recurring cost savings that would be achieved by utilizing the New York MAA contract are indicated below:

	Pre MAA Prices (Bell Atlantic Service)	MAA Price	$ Savings	% Savings
Analog Line Service	$23.48	$5.51	$17.92	76.5%
Digital Line Service	$26.30	$13.03	$13.27	50.5%
Voice Mail Service	$ 4.00	$ 1.57	$ 2.43	60.1%

(Services are per line per month)

Based on the indicated recurring savings, ESU Boston initiated action in September of 1999 to move all New York-based Coast Guard units to the MAA contract.

Transition planning commenced in mid-October 1999 with initial cut-over occurring at the beginning of November 2000. Numerous problems occurred during the initial phases of the transition that included recurrent failure of the primary circuit connecting the Staten Island commands to the AT&T primary switching location. The results of these failures impacted the reliable operation of Coast Guard operational and administrative telephone services including primary Search and Rescue (SAR) lines. ESU Boston escalated the response to these outages to both GSA and the AT&T contractor. Numerous technical difficulties, including poor response to central office switching problems, were cited as the primary cause of problems and delays in resolution. The maximum outage incurred was a period of 16 hours from April 3 – 4, 2000. During this period GSA and the MAA contractor routed key SAR lines to cellular telephone numbers provided by the United States Coast Guard.

As a result of the problems experienced, ESU Boston requested a meeting between GSA Region Two, the AT&T MAA contractor, and personnel from affected Coast Guard units. The impact on critical Coast Guard operations caused by the outages was reinforced and a detailed strategy to ensure reliable final completion of the MAA cutover was sought. The meeting was held on May 3, 2000. Senior management from GSA Region Two and AT&T (including AT&T's Assistant Vice President for Government Markets) assured the Coast Guard that all of the technical difficulties had been identified. A senior engineering team had been dedicated to resolve all issues, and final cutover and resolution of problems would be completed within the week. Within days a majority of the problems were resolved to Coast Guard satisfaction. Since final transition, New York area Coast Guard facilities have experienced extremely reliable telecommunication services and prompt response to requests for new services or problem resolution.

A total of 751 Coast Guard telephone lines were transitioned to the New York MAA contract. The Coast Guard has accrued an annual recurring savings of approximately $150,000 per year as a result of the transition to the MAA contract from the prior Bell Atlantic service.

Thank you for the opportunity to relay the Coast Guard's experience regarding the GSA's Metropolitan Area Acquisitions program today. I will be happy to answer any questions you may have.

Mr. TOM DAVIS OF VIRGINIA. Mr. DeFalaise, I understand you have a time issue, so let me ask you a few questions.

Can you comment further on the situation in which you have asked transition to be reversed and what are the service problems you have had in that instance?

Mr. DEFALAISE. I understand those included such issues as dropped lines where we didn't get a dial tone or the connections failed; there was some crossing of lines and a number of other technical difficulties. This was in one section of an office. This was a particular location so we stopped the conversion for the larger part of the office and asked for a reversal on that particular setup until the problems were solved. It seems it is more a matter of technical difficulties that need to be resolved.

Mr. TOM DAVIS OF VIRGINIA. Do you think it would be helpful if we allowed vendors to market directly to your regional facilities?

Mr. DEFALAISE. The way the U.S. attorneys offices are set up, because the telecommunications expertise is mostly in our Washington office, I think the results would be pretty much as they are today. Either we find there is something new to be done or some cost savings at the Washington end and go out to our offices or they get offers and come to us asking us to evaluate them so I don't know that procedure would change that much. It is pretty much a cooperative effort between our technical people in our Washington office and our field offices. For presentations, I suspect at some point the field offices would call in and ask our Washington people to come and help evaluate them anyway.

Mr. TOM DAVIS OF VIRGINIA. Do you think the lack of cost comparison data made it difficult for you to encourage regional offices to transition?

Mr. DEFALAISE. It certainly would be much easier to encourage the regional offices if we could tell them up front what the cost comparisons were and what they might save in overall operations, so yes, that would be a very attractive feature if it could be done.

Mr. TOM DAVIS OF VIRGINIA. It is a new program and obviously it is going to have its problems getting started and getting the bugs out but I think that sheds some light.

Let me turn to GAO for a minute. Estimated cost savings in the MAA cities is actually quite high. They set a pretty high goal for themselves, do you agree with that?

Ms. KOONTZ. Yes.

Mr. TOM DAVIS OF VIRGINIA. You note in your testimony total cost savings is an estimated $1.1 billion over 8 years. What impact have significant transition delays had on the actual cost savings to agencies or do you think they are just delayed?

Ms. KOONTZ. It is difficult, at this time, to project what the impact is going to be on total MAA savings. The GSA originally projected $1.1 billion. To the extent you have delays it limits the amount of savings you can realize within an 8-year period. However, the estimate GSA put together was based on existing business they have under contract. The potential for business may actually be much greater than that and if the program is able to exploit this larger amount of business, it could be that savings would be greater over the 8 year period. We haven't yet been able to quantify what the impact has been thus far.

Mr. TOM DAVIS OF VIRGINIA. Clearly if it started faster, you would get more savings?

Ms. KOONTZ. Yes, you can only get savings after people are on the program.

Mr. TOM DAVIS OF VIRGINIA. Given some of the difficulties that have been encountered, if you would move ahead and not be ready for it, then you are better off waiting, so I guess the chapter is unwritten.

The up-front cost of transitioning along with the often unanticipated cost of provisioning of new telecommunications equipment is cited as a barrier to transition. Do you follow me? In your view, should GSA have better prepared agencies for these costs? Aren't these additional costs likely to lower overall cost savings?

Ms. KOONTZ. It is true that the savings estimate does not include one-time transition related costs like service initiation charges, any termination fees you have on other contracts, and equipment modifications that need to be done. For that reason, that will reduce the amount of potential savings available over the 8 years.

Under the FTS2001 contracts, GSA was able to plan in advance and collect money from the agencies in order to cover these kinds of transition fees. This did not happen this time and as we understand it, some of the agencies have cited this as a barrier to quicker implementation because they do not have the money budgeted to take care of these one-time transition fees.

Mr. TOM DAVIS OF VIRGINIA. GSA has stated it is moving forward to phase 3 contract awards this year. In your view, are there steps GSA ought to be doing to improve the MAA Program before it moves to phase 3 and what would those be?

Ms. KOONTZ. As you know, our work is continuing, we are not done yet but I think we do have one observation that is based largely on what we did in New York. This is not rocket science by any stretch of the imagination but what we saw there was a real need for improved communications particularly between the MAA contractors and GSA. When you talk to each of the parties, you get quite a different impression of what is going on and I think that indicates there is a need for increased quantity and quality of communications.

One thing we noted in New York was that the GSA region there does not conduct routine scheduled meetings with the contractors to identify, discuss, and track problems that come up, although this is done in other regions. That might be one thing the GSA region could do.

Mr. TOM DAVIS OF VIRGINIA. Thank you.

Mr. Turner.

Mr. TURNER. Ms. Koontz, the GSA is providing basically management consulting services. Would an agency have an option to secure that kind of assistance from some other source and perhaps be able to have another option in terms of their local service?

Ms. KOONTZ. Built into the MAA Program are two types of services that you can get from GSA, that is why there are two different fees. One of these fees, the full service fee, is for GSA assistance in ordering and billing. Agencies can decide if they prefer to deal more directly with the contractor on those issues, and they can do

so more economically, they can do that and avoid the fee. That is one possible option they can pursue.

The other option may be that because MAA is not mandatory, agencies can use any other contract vehicle if any are available but also they can choose to procure their own services, buy tariff services, or to run their own procurement if they believe the services provided under the MAA contracts are not as economical as if they did it on their own.

Mr. TURNER. I noticed today we have raised a lot of issues regarding the GSA's implementation of this program but has your investigation in this area allowed you to take a look at how aggressive individual Federal agencies have been with regard to pursuing options or dealing with the GSA? It seems to me it could be that part of the problem we are seeing here is not solely on the GSA shoulders but perhaps on the shoulders of agency personnel who don't put this as a great priority in terms of what they are doing at their particular agency.

Ms. KOONTZ. Because we have only focused on the New York MAA at this point, I don't think I could generalize on that point at this juncture.

Mr. TURNER. What kind of activities do we have to really encourage the agencies to move aggressively with regard to taking advantage of the services provided by GSA or, in the alternative, to pursue other alternatives on their own? What is it that builds a fire under them to say this is something that is going to save some money, you need to move on it, get with it and spend some time on it, that this needs to be a priority in your agency?

Ms. KOONTZ. One of the things is already present in the MAA contracts. I think you heard the agency people testify to the fact that the prices are quite good under those contracts. The data we have seen, even inclusive of the fees, it is much more favorable in many cases than any other existing vehicle.

It seems to me if that isn't sufficient to entice Federal agencies into the MAA Program, I don't know what would be.

Mr. TURNER. As a percentage, what percentage of the Federal agencies do we know have pursued participation in the MAA Program?

Ms. KOONTZ. I don't know.

Mr. TURNER. Ms. Bates, do you know?

Ms. BATES. I don't know the specific percentage.

Mr. TURNER. Can you give me some indication? Do we have the vast majority of our agencies trying to participate or working with you or do we have the vast majority of them still out there not worried too much about utilizing the services you are providing?

Ms. BATES. I will try and set the stage for you, sir, by example. Within the Washington metropolitan area our WITS Program, which is the MAA in Washington, we have significant participation by the Federal agencies, including the Department of Defense. I would say within Washington, which I might mention the WITS Program, the transition is complete, we have significant participation.

In the other areas, because of the nature of this program, it is local service and it is managed locally in many cases much as my colleagues here at the table have stated, so the decisions are made

locally and in small unit levels. To date, as a rough order including the Washington area, we have 215,000 lines converted to MAA and most of that is in Washington.

I think our challenge in the future is getting out the word by talking to the Interagency Management Council, the local Federal executive boards, really spreading the word on this program because as I stated in my oral testimony, by the end of phase 3, we will have an MAA program within the grasp of the majority of the Federal agencies and it is the responsibility of FTS/GSA to make sure that awareness is out there so people can take advantage of that opportunity.

Mr. TURNER. Thank you.

Mrs. JO ANN DAVIS OF VIRGINIA [assuming Chair]. Ms. Bates, I have a question for you. Can you tell us about the fair consideration process, what qualifications does GSA consider during the process, and is this process clearly defined to the vendors?

Ms. BATES. Fair consideration is a process used to determine in a multiple award contract, which we have several within the Metropolitan Area Acquisition Program to determine which of the awardees would receive a specific set of business. The criteria is contained in the request for proposals and in the contract which says that fair consideration can be conducted one of three ways. The first way is to assess, after the requirement has been defined, take that requirement and match it against the price tables assuming the technical qualifications are met, and that is the case most of the time, and look at the price tables in the MAA. I need to remind you that we do have out year pricing so that we do have price tables, so one can easily assess the total price of that specific requirement. That is one way.

A second way is to take the requirement and form it into a task order and ask each of the multiple awardees to respond with a technical and cost proposal. The third is for any of the companies at any time to come in and lower their prices and enter. No. 1 and No. 2 are the methods we are using. I believe the process is very well defined to the industry.

With regard to our customer agencies, I think this is a new process to the telecommunications environment coming off a monopoly environment into a deregulated environment and multiple award contracts. This is a new process for our customers and we have had to spend time working with them to ensure them that we go through this process and that it is completed.

Mrs. JO ANN DAVIS OF VIRGINIA. I think I have time to ask you one other question.

Back to the fees. I believe Ms. Koontz said the fees are on several levels, so the agency could determine if they could save more money and wanted to do the work themselves. I think I understood in the testimony that you don't disclose your fees? How would the agency know if they could afford to do it better themselves or how much money they would save? How can they know how to make an informed decision if you don't disclose your fees to them?

Ms. BATES. Let me state that our fees are embedded in the bills the customers receive. We have never made an attempt to my knowledge to in any way not disclose those fees to customers as we sit down and talk with them in terms of evaluating alternatives.

Mrs. JO ANN DAVIS OF VIRGINIA. Let me butt in there just a second. If your fees are embedded in the bills, that is after the fact, they have already made the decisions?

Ms. BATES. Right.

Mrs. JO ANN DAVIS OF VIRGINIA. So are they told what the fees are up front before they make their decision?

Ms. BATES. Yes.

Mrs. JO ANN DAVIS OF VIRGINIA. I guess that is not what I was hearing in the testimony. Maybe I should go to Commander Day. Were the fees disclosed to you by GSA when you made your decisions?

Commander DAY. They were embedded in the bill.

Mrs. JO ANN DAVIS OF VIRGINIA. By embedded in the bill, are they spelled out.

Commander DAY. This is before and we know they are there before we enter the agreement.

Mrs. JO ANN DAVIS OF VIRGINIA. Are they spelled out dollarwise or percentagewise so you do know exactly before you make your decisions what you are going to be paying?

Commander DAY. The exact dollar amount, I have not been shown. I do know a percentage of the recurring fee for phone service is related to GSA overhead which we consider as the management portion of our fee, so I don't have to manage the billing, I don't have to manage the vendor. It is sort of expected that is the amount they utilize for the personnel necessary to oversee these contracts. We know they are in there. The exact amount, I have not been shown.

Mrs. JO ANN DAVIS OF VIRGINIA. Not the exact dollar amount, but do you know the percentage?

Commander DAY. Yes, ma'am.

Mrs. JO ANN DAVIS OF VIRGINIA. You do know the percentage in advance?

Commander DAY. The exact percentage, I have not been privy to either.

Mrs. JO ANN DAVIS OF VIRGINIA. Mr. DeFalaise.

Mr. DEFALAISE. I will double check and get back to you on this but my general understanding is we are aware there is an embedded fee, we do not know in advance and it would be nice to know in advance the specific overall cost of GSA fees, but we will nearly always eventually learn what the actual costs of these fees are is after the fact. I will double check and if I am wrong, I will get back to you but that is my understanding at this time.

Mrs. JO ANN DAVIS OF VIRGINIA. Ms. Bates, if they choose to let you do the managing and go with your fee and after the fact get the bill and find out what your fee is and decide they can do it cheaper themselves, can they drop you and do theirs at that point?

Ms. BATES. Yes. I would like to add that in my previous answer to your question, while I stated yes, the fees are known, it is not our intent to hide the fees and if we are not being as forthright in every case with our customers as we should, we will definitely take that as a corrective measure.

Mr. TOM DAVIS OF VIRGINIA [resuming Chair]. One of the cited factors that seems to be impairing MAA implementation progress has been contractor performance which has resulted in untimely

service delivery and service outages in some cases. In some cases it is not even the contractor's fault, it is just transition through other things they have to do.

What steps have we taken to try to hold the contractors accountable for their performance and prevent the recurrence of these problems and are there other context issues where you have to hook up with other lines and so on, building access as you mentioned? What role is that playing?

Ms. BATES. You are right when you state that each issue is difficult. I think we have to keep in mind here that we really are plowing new ground. The competition in the local market is new, it is new to everyone. We have broken the price barriers in the market and we are plowing new ground. It is local. Each situation stands on its own and can be quite lengthy. I won't attempt to go into any of that.

Our first goal has been to really get the barriers, the problems, whatever it is cleared up so we can all get on with the implementation. As we get into these situations, there are very few, if any, that we can ever say this is a problem with you that you are totally accountable for, there is no one else involved in that. Many times, it is very entwined in a lot of issues as you have acknowledged.

I believe our contractors are doing their best. They are a good set of contractors and they too are plowing ground. We are making it. As far as contractor performance issues in the true legal and contractual area, at this time, we have not chosen to pursue them. However, the door is always open for that.

Mr. TOM DAVIS OF VIRGINIA. What is the relationship between GSA's current local service contracts and the rate stabilization agreements and the MAA contracts for local services? Are these being allowed to expire and those requirements moved to your MAA contracts or are you exercising contract options or otherwise extending those agreements?

Ms. BATES. The Rate Stabilization Program was put into place several years ago prior to deregulation when in our attempt to manage the program and bring lowest prices to the government, we negotiated with the local services provider at that time to stabilize the rates over a given period. Those are with the traditional provider and are single award by definition.

It was our program intent to have the MAAs in place to let the rate stabilization programs expire and move over. We have had to extend some of those because of the delays in the MAA implementation. That is the program goal.

Mr. TOM DAVIS OF VIRGINIA. The MAA contracts are awarded out of GSA's national headquarters office but they are administered and implemented regionally?

Ms. BATES. Correct.

Mr. TOM DAVIS OF VIRGINIA. What guidelines have you established for the regional contract administrators to ensure some uniformity in the process or are they given great flexibility and are their particular management or administrative practices used by one region with greater success that you have promoted for use elsewhere?

Ms. BATES. This is one of the areas of centralized management with decentralized operation, a lesson we have learned since the

beginning of the MAA Program where we have made significant changes since the beginning to where we are now. While the service is delivered locally, we have learned it is very critical to the program to have centralized program and project management. We have instituted that and Ms. Binns here is responsible for the program nationwide. She has people on her staff dedicated to managing and operating this program. Within our regions, we also have people identified for the implementation, the specifics, the day to day implementation of that program.

Our contracting people have a similar structure in place where we have centralized contract oversight and administration at our headquarters level led by Mr. Al Olson, our Assistant Commissioner for Acquisition; we have contracting officers in the regions to carry out the necessary day to day contracting activities. This has evolved over the last 2 years. I think we are well positioned at this time to do that.

Communications as alluded to earlier is always a challenge even though we are in the communications business, telecommunications or communicating with one another. We have taken steps to improve that communications so that we can freely identify problems, make sure they are known to everyone in a timely manner, have far more communications with our industry partners and our customers in terms of the day to day implementation as well as making the decisions in order to proceed with the program.

In this particular area, I think we have implemented significant change since the beginning for a very positive effect on the program.

Mr. TOM DAVIS OF VIRGINIA. In your view, how is the marketing of the MAA contract supposed to work? What are GSA's responsibilities and what do you view as the responsibility of the MAA contractor? How does the fair consideration process factor into marketing to customers and the processing of customer service orders and if an MAA contractor were to commit the time and resources to develop a customer and were that customer to place orders with GSA for services from that customer, could the GSA fair consideration process then preempt that customer decision?

Ms. BATES. That is a lot of questions rolled into one. Let me take them one by one.

The marketing concept, I view marketing as customer awareness and getting the information out about the program to make sure the agencies can make that choice. I think that is the responsibility of the GSA, FTS, as well as our industry partners. We need to get out the word about this program, particularly because it is local and decisions are made locally.

It is not just good enough to talk to the department level of an agency. We have to get and reach the entire customer base, very localized in nature and I think this is critical that both the industry as well as FTS does that.

We have to be mindful though of our customer wishes. Some customers do not prefer to be contacted locally, some prefer the national level, some may be at a mid level, so there is no formula. Clearly I think it is all our responsibility to get out the word about the program and program awareness.

Regarding fair consideration, this doesn't extend just to the MAA Program. Fair consideration is a very important and integral part of a multiple award contract environment. It is so integral, it is the law as Linda would remind me. It is our responsibility to conduct fair consideration regardless of which industry partner will identify the requirement and the agency then chooses to bring it to the contract. We conduct fair consideration and there is no guarantee or predetermination as to which industry partner would get that business.

That is a problem that extends far beyond MAA but really goes to the heart of multiple award programs. I think the integrity of that process is key to the entire government acquisition process.

Mr. TOM DAVIS OF VIRGINIA. We have had delays in implementation and you are a lot smarter now than when you started this. We all are. Given all that, do you still think you can achieve the $1.1 billion savings originally contemplated? If you are not sure, you can get back to us.

Ms. BATES. I will get back to you.

Mr. TOM DAVIS OF VIRGINIA. I would like you to go back and take a look. I think one of the problems we have had is we have set unrealistically high expectations and time periods at the very beginning.

Ms. BATES. I agree.

Mr. TOM DAVIS OF VIRGINIA. And a lot of unintended consequences result, particularly with telecom. We are seeing that not only with you but you see this in the private sector. Any company moving in has the same kind of thing. For that reason, we would like to know where we are.

Ms. BATES. We will do that.

Mr. DEFALAISE. Mr. Chairman, if there are any other questions, I would be happy to answer them but otherwise, could I be excused?

Mr. TOM DAVIS OF VIRGINIA. I am going to yield to Mr. Horn for any questions. Otherwise, you can leave with our blessing and thank you for being here.

Mr. HORN. This is a question to all of you. Looking back on GSA over the current contract and were your needs met when new equipment came on the line and what does that mean in terms of the next few years? Would you get the kind of communications equipment that you need to get? If you could give me a feeling for did you have a problem when new equipment came on board?

Mr. DEFALAISE. In our situation, we are fortunate that our telecommunications staff, although very small, is very aggressive in looking for ways to improve the services and to cut costs. In addition to the roughly 65 percent or more savings that we have at Islip in New York, we got a better product. We went from analog to digital and we also got voice mail that we did not previously have.

To this point, we have gone to GSA because the perception has been that they were meeting our needs, giving us a significant savings in cost potentially. As I said, we have only been able to evaluate it for one site because we don't have the data from the others and the quality and level of service we got as a turn key operation,

we just went to them and said, we want to pay less, pick it up and hear a dial tone and we have been favorably impressed so far.

There have been delays in several locations but they have been within expected parameters of infrastructure and regulatory concerns.

Mr. HORN. Thank you.

GAO is a customer of GSA, I take it, right, despite your fine, across the board bluebooks, you are a patient of GSA, correct?

Ms. KOONTZ. I don't know whether GAO is a customer of GSA for the MAA contracts. I am sure Sandy knows but I don't.

Ms. BATES. They are.

Mr. HORN. It is nice to know who is doing what but the issue of new, innovative technology, does that come on board so you have access to it or has that been a problem?

Ms. BATES. The program is structured and the resulting contracts are structured very much to focus and include tech refresh. That is what it is all about when we talk about long term contracts and flexibility. Definitely the framework is there. We have seen it come on, particularly in the case of WITS in the Washington metropolitan area.

Many of the agencies as they transition not only in Washington but in other locations have chosen to upgrade their service or reconfigure to provide greater technology. That is one of the program benefits, to transition and also get something more and the low prices we have been able to get through competition has allowed that in many cases. Agencies have been able to do more with less. I think that is very, very positive and often gets lost when we talk about other issues.

Mr. HORN. Commander, I am curious when you are at sea and when you are in port, does that take a different type of equipment you need based on salt water or whatever?

Commander DAY. No, sir. This is primarily focused on our shore-based facilities. Many of them are just as critical as our under way vessels.

Mr. HORN. Does the Coast Guard have a satellite system so they can communicate?

Commander DAY. We are using commercial satellites as well as some military satellite but this is not part of the offerings coming from this program. We have taken advantage of some of the new technology coming available under MAA. It has increased service capability, particularly with the digital telephone offerings. That is part of the draw for us to go there because of not only the prices but it is refreshing technology which I would not be able to refresh with my own service funds at that time.

Mr. HORN. Are you responsible for computer security or is GSA responsible for that?

Commander DAY. I am responsible for computer security and the computer system operations within my region which is New England.

Mr. HORN. Does GSA have a unit that can help you on the computer security situation or do you have your own group?

Commander DAY. I have my own group and we have not investigated or seen services available from GSA regarding that. There are other computer related services I am aware of but we are not

taking advantage of those at this time, telecommunications primarily.

Mr. HORN. How about GAO, do you have your own unit on computer security or does GSA do it for you?

Ms. KOONTZ. I don't know.

Mr. HORN. Let's have a block in the hearing and get a letter from GAO on that question.

Ms. KOONTZ. OK.

Mr. TOM DAVIS OF VIRGINIA. Mrs. Mink, any questions?

Mrs. MINK. The effort on the part of government to try to save money and it appears from the testimony of a number of witnesses, there is the potential of quite a bit of savings if we can get all the Federal agencies into this combined cooperative telecommunications effort.

Up to date, you have been in this thing for 2 years, 1999, 2000 and this year. What would you estimate to be the total cost savings thus far based upon the areas you have been successful in congregating into this system?

Ms. BINNS. It is very difficult to quantify with a great deal of precision.

Mrs. MINK. How about a ballpark?

Ms. BATES. I would say we are saving right now about $1 million a month which includes the Washington area MAA. That consists of about 215,000 lines.

Mrs. MINK. Aside from the cost factor which must be appealing to the agencies, is there any other benefit they would derive by participating in the MAA?

Ms. BATES. I believe there are several other benefits they would get. First of all, they would get the benefit of competition and we have brought competition in the local market for the first time.

Mrs. MINK. Would you explain how you brought competition into the local market?

Ms. BATES. The MAA Program, one of the driving factors was furthering public policy in the area of deregulation in the local market. These are the first acquisitions that were designed to go out and take advantage of that deregulation and see if there was competition in the local market and perhaps to stimulate that.

We offered the government's requirements and put them out there. We indeed found that there is competition out there and it is very real. So our customers have the benefit of the competition and also of choice which they have never had before. We have been in a monopoly, regulated environment and they have not had the choice. That is very, very positive. I think it is a little more than just cost reduction. It is breaking the barrier of the cost in the local market that we have brought.

Also, the MAA Program, as GSA regional services has always done, has offered the customer total service. Because the decisions are locally made many times, the people in our customer agencies have many other duties and rely on GSA/FTS to make decisions for them or help them make decisions. Our staff stands ready to help them make those choices, make technical decisions, recommendations and to assist them in any way.

Another important factor is this isn't one of those situations where once the service is installed, FTS walks away from the cus-

tomer. We are there with the customer troubleshooting, operations, maintenance, managing our contractor, all the way until that customer disconnects that service. It really is a life cycle service and management.

Mrs. MINK. So when you estimate cost savings, do you include the additional staff that may be required in order to do all the servicing you just described?

Ms. BATES. When we calculated the cost savings of the $1 billion, we did not include all of those elements. Basically, what we did is looked at what our customer base was paying today and what they would be paying in the future under this program. Being optimistic people, we also factored in significant growth and that growth was factored in on both sides of the equation.

Mrs. MINK. When you assess the management fees, do you include these additional costs that are experienced by GSA and FTS?

Ms. BATES. Not directly in computing the savings. I view that as our fees and I want to tell you, we are talking about fees that range from $2.50 a line to $6 a line. That is just to put the framework there. The value that GSA adds is that we are doing this so our customer agencies do not have to do it. I would pose that we are very good at what we do. We have experience, we have learned many times through the school of hard knocks so perhaps we are more efficient than others might be.

The truth is, with our customer agencies having gone through down sizing and right sizing, many of them are focusing on their core agency mission and their acquisition and technical people are doing the same. So they rely on us to do that.

Mrs. MINK. Thank you, Mr. Chairman.

Mr. TOM DAVIS OF VIRGINIA. Mr. Turner.

Mr. TURNER. The MAA Program has been implemented in 30-some cities and in 8 of those cities only 1 contractor was announced by GSA. Could you tell us why there was only one contractor and does this not take away from the idea that there is competition inherent in the program you are administering?

Ms. BATES. In many of those instances, there was competition. It was not just one company proposed and one company being awarded. There was competition. The results of the competition dictated that it was appropriate to award the contract to only one provider. The Federal acquisition regulations as they relate to multiple awards provide guidelines in terms of when it is appropriate and relative to technical and cost proposals of each of the bidders. In the cases where we made a single award, it was appropriate for only one contractor.

Mr. TURNER. Do you have the option of adding the contractors later? How does that work?

Ms. BATES. Yes, sir. If you recall, one of the principles of the program is the crossover. While we have focused in past hearings on the discussion of crossover between long distance and local and local to long distance, part of the crossover allows MAA providers to crossover into other locations. I think this is a strength of the program because where we did have a single award because of the situation at the time, it does not preclude our customers from having choices and multiple award as we move ahead with crossover.

Mr. TURNER. Ms. Koontz, this kind of hearing is oftentimes a little frustrating when we have a story that says contracts that were supposed to be implemented over 9 months have taken much longer. We are told the problem is the regulatory environment makes it difficult. I know in New York there was a legal problem; you're looking at potential management problems in GSA or whether the agencies are not aggressive enough, or whether contractors aren't performing but I have not yet had a sense to the apportionment of that blame. Is it primarily the contractors that are dragging their feet or is it the GSA? Who should this committee point to and say you need to do a better job?

Ms. KOONTZ. It is probably premature for GAO to say exactly where the blame lies in any of this. If it is anything like FTS, there will be plenty of blame to go around probably.

We have not completed our work yet and many of the issues we presented today, we have been unable to nail down at this point in time. It is not possible for us to really talk about what recommendations for the future should be.

Mr. TURNER. I am sure the chairman will be diligent in keeping a watchful eye on all those groups.

Mr. TOM DAVIS OF VIRGINIA. Ms. Davis.

Mrs. JO ANN DAVIS OF VIRGINIA. Understanding we are not far enough along yet to determine about fees, 84 percent seems rather high to me, as a businesswoman, for a fee. I am curious what do the agencies get for 84 percent versus 28 percent on the low end?

Ms. BATES. First, I would like to address the percentage. I think to characterize the fee in terms of percentage of the line charge presents somewhat a distorted picture. If our fee is $2 and the line charge is $40, as it was in some cases pre-MAA, that is a fairly low percentage. If post-MAA the fee remains $2 and the line charge is $5, that percentage is different and it presents a distorted picture. In many cases, that is what we are dealing with where we had a line charge that was up here and now is down here.

By the same token, I don't mean to imply that we are not managing the fee or concerned about the makeup of that fee. That is why I think through management of our operating expenses, our fee has gone down 30 percent in the last 5 years and we are continuing to look at it. FTS being a nonappropriated fee for service organization, and nonmandatory, you can well imagine like any other good business person, I need to keep a strict eye on my operating expenses and I am doing that actively. We can always look for suggestions to improve.

What value do we get or how do we earn that fee? As I stated earlier, we manage the customer through the life cycle from the beginning of the requirement all the way to the time they disconnected. We provide acquisition support, put the contracts in place, do the follow on contract management and administration, which in this particular market is always a challenge and requires top notch, highly skilled individuals.

We also provide consulting services to the customer in helping them define their requirements and to look at the solutions and evaluate those. This requires technical people up on the latest technology.

We also do the day-to-day operations of operating much of these switches and services where we are looked to as the provider in the case of many Federal buildings where we are providing service to all the tenants within that building. We are their provider, they look to us.

We also do the troubleshooting that is required anytime there is a system glitch or there is a problem. The troubleshooting extends back to the equipment to the long distance carrier or whatever. Our customers look to us, when they have trouble they call us and ask us to ferret it out. We do that, that is why we are there.

We also provide billing services and a consolidated bill. We take in the bills and provide the bill to the customer and validate the bill in conjunction with the customer. So we really are a total service provider. It takes the responsibility and much of the technical burden off the customer by doing that. I think my colleagues here have indicated they have taken advantage of those services.

Mrs. JO ANN DAVIS OF VIRGINIA. If two Federal agencies were getting the same service from you, would their fee be the same?

Ms. BATES. If they were getting identical services, yes.

Mrs. JO ANN DAVIS OF VIRGINIA. The percentages are different because they may use two different carriers, so their line charge may be different but your fee would be the same even though the line charge is different?

Ms. BATES. Right. The fee is not at all related to the cost. If a line charge is $2 or $3 in a given city, the fee is the same. Within the same city, it is the same. It can vary between locations because our cost base is different.

You recall the fee is intended to recover all of our direct and indirect operating costs. I wanted to be accurate and not mislead you.

Mr. TOM DAVIS OF VIRGINIA. The Sprint bridge contract expired June 6, I didn't hear what happened to it.

Ms. BATES. It expired, we did not extend the contract. The transition is completed relative to Sprint to Sprint transition. The transition period has ended and all of the traffic now and services on Sprint is being billed under FTS2001.

Mr. TOM DAVIS OF VIRGINIA. Thank all of you for being here today.

I will let you step down and welcome our second panel to the witness table. We have John Doherty of AT&T; James Payne of Qwest; Randall Lucas of Verizon; Jerry Hogge of Winstar and David Page of BellSouth.

[Witnesses sworn.]

Mr. TOM DAVIS OF VIRGINIA. I would ask you to take about 5 minutes and summarize your comments. We have read your statement and have questions based on it.

We will start with you, Mr. Doherty, and move down the line.

STATEMENTS OF JOHN DOHERTY, VICE PRESIDENT, AT&T GOVERNMENT MARKETS; JAMES F.X. PAYNE, SENIOR VICE PRESIDENT, GOVERNMENT SYSTEMS, QWEST COMMUNICATIONS; RANDALL L. LUCAS, VICE PRESIDENT, SALES, FEDERAL MARKET, VERIZON FEDERAL INC.; JERRY HOGGE, VICE PRESIDENT, GOVERNMENT SOLUTIONS AND ENHANCED SERVICE PROVIDERS, WINSTAR; AND DAVID PAGE, VICE PRESIDENT, FEDERAL SYSTEMS, BELLSOUTH BUSINESS SYSTEMS

Mr. DOHERTY. Thank you for holding today's hearings to discuss GSA's Metropolitan Area Acquisition Program. AT&T appreciates the subcommittee's dedication to the stated goals of the MAA Program, end to end competition in the Federal telecommunications market and its promise of choice, innovation and lower prices to benefit agency users and taxpayers.

The MAA Program was designed to bring these benefits to the local Federal telecommunications market. We believe a program that operates more like the private sector will benefit both taxpayers and government by reducing barriers to competition and the inefficiencies of the present program. We look forward to working with the subcommittee, other vendors, GSA and interested stakeholders to make this happen.

I am pleased to respond to questions asked by the chairman in his letter of invitation and his request for recommendations to improve the MAA Program.

While the program was launched as part of a tripartite agreement between Congress, industry and GSA, AT&T viewed the MAA Program as a real opportunity for government customers to realize benefits of end to end telecommunication competition. We still do.

AT&T is committed to bringing choice to the local telecommunications market. We have demonstrated our corporate commitment to providing local service through a multibillion dollar investment in local service infrastructure. Today 2 years after the first MAA contract award, I believe all stakeholders remain committed to the success of the MAA Program. Indeed, AT&T holds 10 of the 37 MAA contracts and has transitioned over 10,000 lines to date.

However, a number of factors have slowed or prevented achievement of the program goals. Based on experience to date, we believe changes should be made to the program. These recommendations are: adopt the use of telecommunication service schedules, level the playing field for local service providers, provide financial assistance to agencies for local services transition, reduce GSA program administrative fees, and clarify program participant roles and responsibilities.

There are several factors that have hindered the success of the MAA Program. These are: counterproductive, noncommercial practices; lack of commitment to transition services to the MAA Program; uncooperative, incumbent local exchange carriers; and untimely and inaccurate information from the government about customer telecommunication needs.

Continuation of often higher priced legacy contracts with ILEX and ambiguous roles and responsibilities or stakeholders in implementing the program.

We believe applying commercial practices would streamline the program and facilitate more rapid transition. We offer the following recommendations to address the impediments to this program. These recommendations, if implemented, will more closely align the program with commercial practices and realize the goals of the program.

Our first recommendation is that GSA adopt telecommunications service schedules to encourage even greater competitive choice and eliminate administrative burdens. Under the schedule's approach, each vendor would disclose the terms, conditions and locations where it is going to provide specific services. These schedules would ensure fairness in implementation of the program while providing agencies with truly competitive prices and the diversity of innovative services currently offered in the commercial marketplace.

The playing field must be level so that everyone can compete. Many agencies do not participate in the MAA Program because of the one-time charge required to install the facilities and equipment necessary for transitioning service. Incumbent providers hold an inherent advantage because they have existing infrastructure and need only reprice their current services which is a paper transition rather than a physical transition.

End user agencies must be educated about the favorable, long term savings available under the MAA contracts and should be strongly encouraged to make use of these contracts. The best means of accomplishing this would be to allow vendors to freely market their MAA services to the agencies. If, as GSA officials appear to have indicated to GAO, GSA is moving to this position, we believe this is a step forward.

Third, in order to assist end user agencies in their transition to an MAA Program, GSA should provide MAA customers with financial assistance through the use of a transition fund. GSA used an information technology fund to offset agency transition costs for the FTS2001 long distance service contract. More MAA transitions could be achieved by expanding the use of this transition fund to local services in order to offset the end user's expenses incurred when a physical transition is required.

GSA's program administrative fee must be reduced. These administrative fees have significantly offset vendor offers. While the MAA Program has been successful in reducing prices from industry, only a fraction of the agencies have taken advantage of these lower prices. The current administrative fee structure has diminished agency incentive to transition to competitive vendors. The administrative fees applicable to schedules are significantly lower and would reduce prices paid by the end user agencies for local services in MAA cities.

Clarify responsibilities of MAA Program stakeholders to ensure accountability, cooperation among all and more readily achieved MAA Program goals. To address this ambiguity of roles and responsibilities, AT&T conducted an extensive analysis of the MAA provisioning process and documented the specific responsibilities of vendors and the government.

With our full support, this documentation has been incorporated into several of AT&T's MAA contracts. Adoption of a uniform definition of roles and responsibilities would promote greater under-

standing and accountability among all involved and optimize achievement of program goals.

By adopting telecommunications service schedules, replicating practices of the commercial marketplace, and implementing the other changes recommended above, local exchange competition will be accelerated providing end user agencies with a variety of alternatives to meet their telecommunication needs and save significant taxpayer dollars.

With the renewed focus of this subcommittee on the program issues associated with the MAA, we have an opportunity to change course and improve the speed of the implementation of the MAA Program.

[The prepared statement of Mr. Doherty follows:]

Statement of John J. Doherty
Vice President
AT&T Government Markets
Before the Technology and Procurement Policy Subcommittee
House Government Reform and Oversight Committee
June 13, 2001

Thank you Chairman Davis, Ranking Member Turner, and members of the Subcommittee for holding today's hearing to discuss Metropolitan Area Acquisition (MAA) program. We appreciate the Subcommittee's dedication to the stated goals of the MAA program – rapid deployment of end-to-end telecommunications competition, and bringing choice, innovation, and lower prices to benefit agency users and taxpayers. We look forward to working with the Subcommittee and the General Services Administration (GSA), other vendors and all other interested stakeholders to achieve these goals.

Since the earliest stages of this program, AT&T has been committed to providing local telephone service to the federal government; this was no more apparent than when AT&T acquired the nation's largest competitive local exchange carrier (CLEC), and invested billions of dollars in local service infrastructure. This market is important to us; we view it as but one component of the comprehensive agreement between Congress, the Executive Branch and industry forged almost three years ago to provide one stop shopping to federal government customers and eliminate the artificial distinctions between contracts such as FTS 2001- long distance, MAA -local, and other telecommunications contracts.

Beginning in 1998, the General Services Administration (GSA) conducted solicitations of MAA contracts in twenty cities across the United States to foster nascent local telephone service competition, to produce lower prices and provide more attractive offerings for its agency customers as enabled and envisioned in the 1996 Telecommunications Act. When these solicitations were announced, AT&T viewed them as opportunities for Government customers to realize the benefits of end-to-end telecommunications services competition. We still do.

Today, two years after the first MAA contract award, agencies and taxpayers have received only a fraction of the potential benefits from the contracts awarded. The pace of service transition has been slowed due, in large part, to the complexity of the program and the services provided, contract ambiguities and oversights, administrative burdens, new entrant technical issues, and negative actions by incumbent local exchange carriers.

I am pleased to respond to the questions you raised in your invitation to testify regarding the pace of transition, to provide some understanding of the issues involved and the lessons AT&T has learned in implementing our MAA contracts, and to recommend changes that will speed achievement of the program's goals. Working in partnership with the government and other service providers, I am certain we can resolve the systemic

issues that have prevented the MAA program from proceeding expeditiously, thereby accelerating the savings and innovation for government customers and taxpayers that naturally flow from a competitive market.

My recommended changes to the MAA program are to (1) adopt the use of telecommunications services schedules, (2) level the playing field for local service providers, (3) provide financial assistance for local service transition, (4) reduce GSA program administrative fees, and (5) clarify program participants' roles and responsibilities for provisioning telecommunications services.

GSA awarded the first MAA contracts in May 1999. The first three contracts for New York, Chicago and San Francisco (Phase I) were awarded exclusively to AT&T based on our competitive pricing and service offerings. In Phases II and III, GSA has awarded 34 more MAA contracts for local telephone services in 17 cities. All told, AT&T currently holds 10 of these 37 contracts in the following cities: New York, Chicago, San Francisco, Buffalo, Cleveland, Indianapolis, Dallas, Denver, Boston and Philadelphia. A list of the MAA contract awards, as contained on GSA's website, is included as Attachment 1.

Each MAA contract contains a list of locations identified by GSA to be transitioned during the first 9 months after GSA gives the vendor a notice to proceed. Under the MAA contracts, awardees were required to file a transition plan or schedule to move customers at those sites to the MAA contract. This contractual requirement, and the opportunities it represented, were relied upon by AT&T and, I submit, other MAA contractors, as a clear manifestation of GSA's intent to actively transition those listed sites to the MAA contracts. Two years after the first three contract awards, however, only about 10 percent of the opportunities identified by GSA have been transitioned in New York; approximately 36 percent of those lines have been transitioned in Chicago; and approximately 12 percent of those lines have been transitioned in San Francisco.

Impediments to MAA Program Success

There are several factors that have caused delays in migrating the agencies at the pace mandated in the contracts and producing the taxpayer savings that GSA announced would flow from the MAA program. I will not spend time discussing each of these areas, because I believe the key issue is how to move forward. However, let me briefly discuss the impediments in the context of AT&T's experience. The key factors that have hindered the success of the MAA program are:

- Counterproductive non-commercial practices;
- Lack of commitment to transition services to the MAA program;
- Uncooperative incumbent local exchange carriers;

- Untimely and inaccurate information from the government about the customers' telecommunications needs;
- Continuation of often higher priced legacy contracts with ILECs;
- Ambiguous roles and responsibilities for stakeholders implementing the program.

Let me now briefly discuss some of the impediments that have contributed to delay and put these impediments in the context of our experience.

Complexity of service arrangements and vendor relationships needed to replicate current services.

The shear complexity of the services to be provided led to delays in the transition. Customers, understandably, want to replicate their existing service. To do so requires the integration of services and equipment procured under separate contracts. Thus, transitioning service is a complex technical process involving multiple vendors under multiple contracts.

Incumbent local exchange carriers (ILECs) have a tremendous advantage over CLECs. Incumbent contractors own significant portions of the infrastructure required for competitors to provide service; these services or capabilities must be leased or purchased from them in some cases. For instance, existing customers want to retain their local telephone numbers. To accomplish this, CLEC vendors must arrange to have those numbers "ported" from ILECs. Intervals for implementing such porting are lengthy and have been established through interconnection agreements with each of the ILECs, many of the terms of which have been litigated at the state public utility commissions.

In New York, a particularly vexing issue was gaining access to existing "riser cable," or the wiring that connects a CLEC's network to the agency users on the upper floors of buildings. The contracts contemplate the reuse of such inside wire, but its availability was frustrated by the ILEC's actions. We began pursuing access to these essential facilities in the summer of 1999 and ultimately had to pursue relief from New York's Public Service Commission, which only last month ordered more reasonable access over the ILEC's objection. We are hopeful that this order will now speed our ability to transition customers in New York.

In the first three MAA cities, there were a number of capabilities needed to meet customer needs that had not been identified in the MAA contracts, necessitating the development of capabilities and interfaces and the negotiation of contract modifications. For example, the original contracts overlooked basic requirements like links to voice mail systems and the provision of customer directories. These factors contributed to delays in the transition.

Continuation of existing contractual arrangements for local telephone services and the lack of commitment to transition agencies to the MAA.

Despite the award of the MAA contracts, GSA has extended legacy local services contracts with incumbent local exchange carriers. These parallel contracts have dissuaded agencies from transitioning service from these incumbents, and have undermined the long-term purpose of the program, to create a competitive environment that drives prices toward cost and promotes innovation. As you know, Mr. Chairman, agencies must procure goods and services in accordance with the Competition in Contracting Act (CICA). That process consumes time and resources. In addition, physical transitioning to another provider exacts an economic and psychological cost from the agencies while transitioning to the new service provider. Staying with the incumbent is virtually transparent. For this reason, absent compelling incentives, agencies transition from incumbents only when there is no incumbent contract vehicle alternative.

Although agencies may benefit in the short run from staying with an incumbent, the competitive advantages available will diminish with time because competitive vendors will be driven from the government marketplace leaving the government ostensibly captives of the incumbents – the same place it was before the MAA program was initiated. Without competing vendors in the government marketplace for local services, agencies and the taxpayers will lose the leverage to gain access to market competition and rapid technological innovation.

Compounding this is the lack of any aggressive program to provide incentives to agencies to transition their local telephone needs to the MAA. Under the FTS2001 procurement, there are no incumbent monopolies, but the GSA still provided funding to the agencies for offsetting the significant cost of transition to incent agencies to move to the FTS 2001 contract. This approach should apply to the MAA program *a fortiori* because the incumbents are monopolies that have the means and incentives to avoid competition and should not be aided in this endeavor by GSA. Indeed, the 1996 Telecommunications Act was designed to eliminate such monopolies. Thus in the interest of securing long-term competitive benefits for its' customers, GSA should use the GSA transition fund to offset these costs for agencies.

Further evidence that this lack of commitment exists is apparent when one considers the mark-up GSA imposes on services MAA vendors are selling to the agencies and the restrictions on the MAA vendors from direct marketing to agencies.

Availability of accurate, complete and timely information needed to define service needs.

Specific information regarding each end user's needs is required in order to complete a transition. This information must be collected before any plans for the transition can be formulated. Delays in gaining access to buildings to evaluate facilities or to conduct site surveys, or in obtaining customer service records (CSRs) or other vital information from the incumbent providers, also delays transition. During the first two

years of the program, there also have been problems with the accuracy of information obtained. These inaccuracies have led to improper installations in some cases, and delays in other cases, both causing customer dissatisfaction. To remedy these types of problems, AT&T worked with GSA during transition in each of the first three cities to compile essential information needed, identified what must be provided for future transitions and underscored the extreme importance of its accuracy. Where new buildings were being occupied, there were delays caused by untimely completion of other construction activities, and wiring being done by other contractors.

Not unexpected for any program of the magnitude and complexity of the MAA, there have also been equipment incompatibilities and process lapses. When these arose, AT&T immediately identified and corrected the root cause of the problem and developed procedures to minimize their recurrence. All of these factors have contributed to the slow pace of transition to the MAA contracts limiting competition and savings. The experience gained and the steps AT&T has taken to address some of these problems should diminish the likelihood of their recurrence. However, I believe some changes to the program are necessary.

Recommendations

Several changes could be made to the program that will accelerate local competition and ensure that the better prices and services flowing from local and end-to-end competition are realized. With the adoption of our recommendations, we believe the government will enjoy greater competition and savings to the agencies and taxpayers, and make the program more attractive to other competitors.

Adopt telecommunications services schedules

Contract administration under the MAAs is unnecessarily complex and costly. For example, a vendor that has won contracts in multiple markets must replicate the same contract deliverables multiple times. Since there are individual contract administrators in each city, their review and changes to those contract deliverables, as well as basic interpretations of the contract, have led to disparities in treatment city-to-city and lack of uniformity in some procedures and requirements, increasing costs and making compliance and replicability difficult. Eliminating multiple contracts in favor of telecommunications services schedules would significantly reduce these burdens without sacrificing benefits and encourage even greater competitive choice.

AT&T has found the "fair consideration" process for deciding which vendor in a multiple award city will provide service confusing and lacking uniform application and positive feedback. No uniform methods or procedures have been adopted for this process. Further, there is limited feedback on the outcome of any specific fair consideration application, which has led to confusion among stakeholders. A preferable means would be telecommunications services schedules filed by telecommunications providers and permitting agencies to evaluate those schedules and choose the one(s) that

best meet their needs. GSA could serve a very useful role as consultants to the agencies to help them understand those schedules and the consequences of the various choices.

Level the playing field for competitive local service providers

When customers transition their existing service from one contract held by an ILEC to an MAA contract awarded to an ILEC, it is a "paper transition" rather than a physical transition, *i.e.*, the customer needs no physical changes in its equipment and facilities. The incumbent simply reprices the services already provided under the terms of the new MAA contract. Obviously, it is much easier for an end-user agency to transition under these circumstances. Without the availability of transition assistance and GSA pressure to migrate to this program, existing customers have little incentive to change. This has significantly reduced the opportunity for competitive local exchange carriers to win this business in those cities where we compete with the incumbent.

We have also learned that GSA has extended legacy contracts with ILECs so that customers could continue to obtain services from these carriers. While continuing contracts with ILECs permits continuing services and may produce some short-run savings, it frustrates efforts to foster long-run competition that results in long-run savings for end-user agencies. That goal cannot be achieved if GSA maintains these "competing contract vehicles" with ILECs because the agencies will have little or no incentive to move to the MAA program. By limiting competition, the agencies will not receive the long-term savings achievable through the MAA program. We recommend that GSA work to rapidly end such arrangements that compete with the MAA.

Provide MAA customers financial assistance through the use of a transition fund

Another significant means of leveling the playing field is to provide local service transition assistance. GSA used an Information Technology Fund to offset agency transition costs for the FTS2001 long-distance service contract. However, no financial assistance has been used for the MAA local service contracts, inhibiting the transition from existing contracts. More MAA transitions could be achieved by expanding the use of this transition fund to local services in order to offset end-user agencies' expenses incurred when a physical transition is required.

GSA's program administrative fees must be reduced

Steep contract management fees (CMF) have an artificial effect on pricing and encumber competition. GSA's CMF and the full service fees applicable under the MAA contracts have reduced the monthly savings produced by the MAA contract prices when compared to existing prices, in turn reducing the savings that could offset the one-time cost of physical transition. GSA uses these fees to offset its own revenue losses caused by the significantly lower prices of these contracts, or to cover expenses in other programs it administers. In any case, these surcharges should not be driving away savings to the agencies because increasing transition expenses only reduces the volume of business "in play" for transition, and thus, reduces savings to taxpayers. Under these

circumstances, a reduction of these fees or switching to the lower schedule fees is imperative.

While the MAA contracts have produced substantially reduced prices from vendors, these prices have not been fully passed on to the agencies and thus, only a fraction of agencies have transitioned to reduced rate service. By moving to a fee structure applicable to schedules, end user agencies could reap the benefits of lower prices.

Clarify responsibilities of MAA program stakeholders to ensure accountability and cooperation among all and to more readily achieve MAA program goals

In any procurement, especially one of the size and scope of the MAA program, there will always be the need to coordinate related contracts and to obtain essential information. Multiple stakeholders are involved in the MAA program with differing roles depending upon the service delivery point (SDP) – one of six service location access points in a building – chosen by the customer. In fact, during one of AT&T's first cutovers to provide local telephone service, it was apparent that there was no clear-cut understanding as to the respective roles and responsibilities of AT&T, other involved vendors, GSA, and the end-user agency for the particular service arrangement ordered.

Depending upon the SDP chosen, responsibility for testing, installation, coordination and information gathering may be spread amongst a number of stakeholders. To address these roles and responsibilities issues, AT&T conducted an extensive analysis of the MAA provisioning process and documented the specific responsibilities of all involved in the context of the SDP chosen. The result of that analysis, are summarized in a document called "SDP Roles and Responsibilities." I would ask that it be included in the hearing record (Attachment 2). We believe that this document can serve as a useful foundation for industry and government to define the roles and responsibilities of stakeholders and increase accountability.

Conclusion

We support the MAA program. We want it to succeed, and we believe that AT&T can be a successful MAA contractor. While the transitions have been difficult, we have learned much from the experiences and have instituted procedures to minimize their recurrence. However, there is no question that the program as currently constituted has delayed, and will continue to delay, the date by which end-user agencies could enjoy the benefits of lower prices and better services.

With a new focus on the program issues identified, we have an opportunity to fashion a more effective means of delivering these services. I believe the most fundamental change that could produce the greatest results would be embracing the use of telecommunications services schedules to be used by all vendors who want to offer such services. Those schedules would set forth where those vendors would provide services and the prices, terms and conditions for such services. Such an approach would

streamline the solicitation of prices and delivery of services and unleash real competition for the agencies.

Working together, Congress, industry and the GSA can implement specific recommendations that will enhance competition. By making the changes AT&T is recommending, the Government ultimately can achieve its objective of providing end user agencies with a variety of alternatives to meet their telecommunications needs in a timely fashion, at the best price for the agencies, saving significant dollars for taxpayers.

Thank you.

Attachment 1
MAA Contract Awardees

City	Date Awarded	Vendor	Contract #
Abuquerque	8/00	Qwest	GS00T00AHD0038
Atlanta	4/00	WinStar BellSouth	GS00T00AHD0014 GS00T00AHD0015
Baltimore	3/00	WinStar	GS00T00AHD0010
Boise	8/00	Qwest	GS00T00AHD0039
Boston	7/00	AT&T SWB WinStar Verizon	GS00T00AHD0033 GS00T00AHD0034 GS00T00AHD0035 GS00T00AHD0036
Buffalo	2/00	AT&T Verizon	GS00T00AHD0002 GS00T00AHD0003
Chicago	5/99	AT&T	GS00T99AHD0001
Cincinnati	3/00	WinStar	GS00T00AHD0006
Cleveland	3/00	Ameritech AT&T	GS00T00AHD0008 GS00T00AHD0012
Dallas	6/00	AT&T SWB WinStar	GS00T00AHD0027 GS00T00AHD0028 GS00T00AHD0029
Denver	7/00	AT&T Qwest WinStar	GS00T00AHD0030 GS00T00AHD0031 GS00T00AHD0032
Indianapolis	4/00	WinStar AT&T Ameritech	GS00T00AHD0020 GS00T00AHD0022 GS00T00AHD0021
Los Angeles	3/00	WinStar Pacific Bell	GS00T00AHD0004 GS00T00AHD0005
Miami	4/00	WinStar BellSouth	GS00T00AHD0016 GS00T00AHD0017
Minneapolis	5/00	WinStar Qwest	GS00T00AHD0026 GS00T00AHD0025
New Orleans	10/00	Bell South	GS00T01AHD0001
New York	5/99	AT&T	GS00T99AHD0007
Philadelphia	2/01	AT&T WinStar	GS00T01AHD0002 GS00T01AHD0003
San Francisco	5/99	AT&T	GS00T99AHD004
St. Louis	4/00	WinStar SWB	GS00T00AHD0018 GS00T00AHD0019

http://hydra.gsa.gov/maa/awardees.htm

Attachment 2 to Testimony of John Doherty

Appendix E

Service Delivery Point (SDP) Roles & Responsibilities

Part 1: MAA SDP Location Definitions

The SDP is the interface point for the physical delivery of service and the point used by the AT&T to identify the charges for services rendered. Each SDP is defined as the combined physical, electrical, and service interface between the contractor's network and the Government on-premises equipment, off-premises switching and transmission equipment, and other facilities (such as those provided by telephone central offices). SDP 6 includes a leased voice instrument equipped with a line/mounting cord for connection to the jack at SDP 5.

Figures E.1-1 through E.1-7 depict each of the potential MAA SDP locations which may be chosen by the Government. SDPs may also be located off Government premises when necessary, e.g., to provide Dedicated Transmission Service (DTS) circuits from a switch to an inter-exchange carrier (IXC) Point of Presence (POP).

As indicated by **Figure E.1-1** below, an SDP is the interface point at which a service is delivered by AT&T to the user. As discussed in Section C.2.1.5 of the contract, this is the point at which responsibility for service transfers from AT&T to the Government (i.e., service on the left side of an SDP in the diagram above is the responsibility of the Government, and service on the right side of an SDP is the responsibility of AT&T).

Further information on the Government's definition of the various SDPs can be found in Section C.2.1.5 of the MAA contract. The following pages describe in detail the individual SDP configurations available under AT&T's MAA contract.

MAA SDP Location Overview

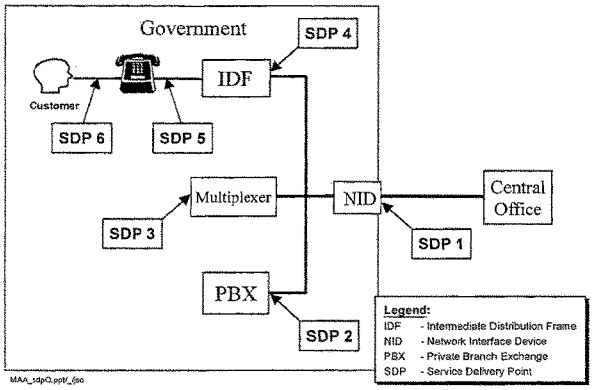

Figure E.1-1: Depicts MAA SDP Location Overview

SDP 1:

Facility brought into the Main Distribution Frame (MDF) from the AT&T central office to the Network Interface Device (NID). AT&T will supply a NID for new locations (where no NID exists), or where there is no capacity on, or access to, the existing NID. The Government will be responsible for all connections from the NID to the Intermediate Distribution Frame (IDF), multiplexers, Private Branch Exchange (PBXs), or any other equipment on the Government's premises. For further information, see Section C.2.1.5 of the MAA contract(s). **Figure E.1-2** depicts AT&T's responsibilities (dark shading), and the Government's responsibilities (light shading), for SDP 1.

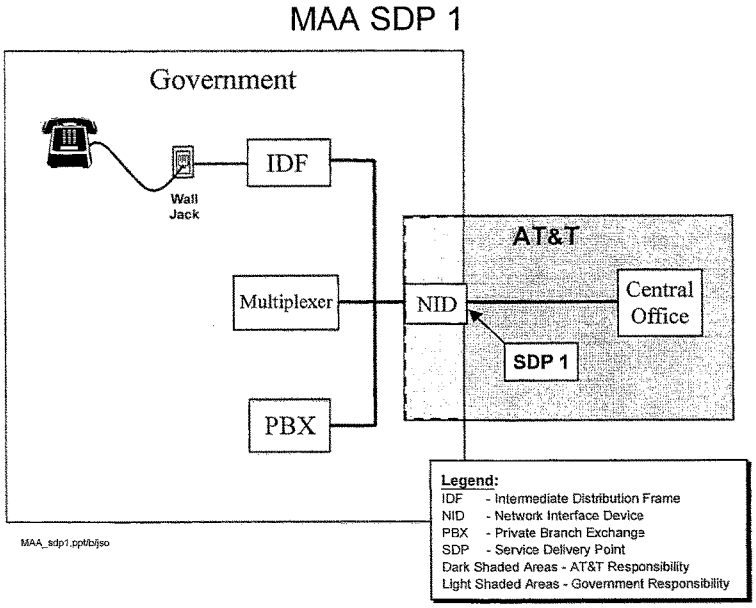

Figure E.1-2: Depicts an SDP 1 Configuration Only

SDP 2:

Transmission facility (e.g., DS-0 type facility or Primary Rate Interface (PRI)) from the AT&T central office to the customer's PBX. AT&T will supply a RJ21X for new locations (where no RJ21X exists), or where there is no capacity on, or access to, the existing RJ21X. The Government is responsible for cross-connects between the RJ21X and its PBX. For further information, see Section C.2.1.5 of the MAA contract(s). **Figure E.1-3** depicts AT&T's responsibilities (dark shading), and the Government's responsibilities (light shading), for SDP 2.

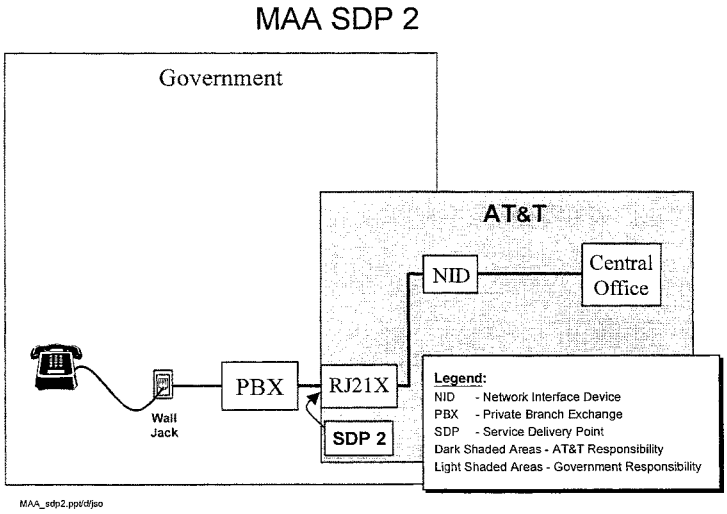

Figure E.1-3: Depicts an SDP 2 Configuration Only

SDP 3:

Transmission facility (e.g., T1 type facility) into an AT&T-owned and provided multiplexer. The Government is responsible for all connections to the multiplexer. For further information, see Section C.2.1.5 of the MAA contract(s). **Figure E.1-4** depicts AT&T's responsibilities (dark shading), and the Government's responsibilities (light shading), for SDP 3.

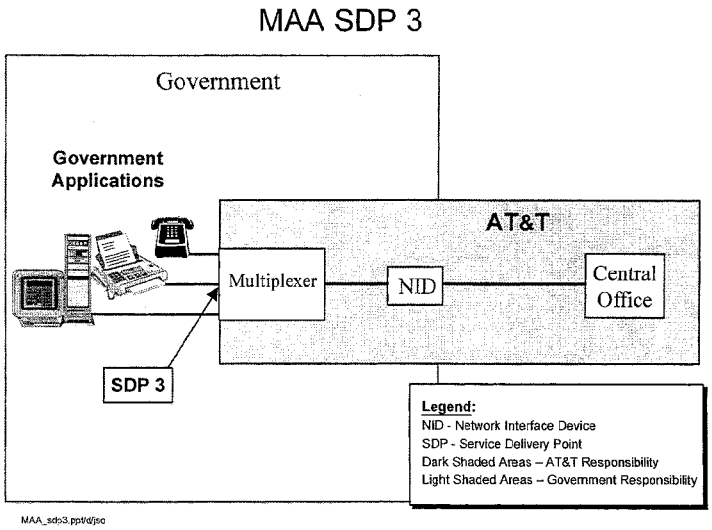

Figure E.1-4: Depicts an SDP 3 Configuration Only

SDP 4:

Transmission facilities to the AT&T side of the IDF. AT&T is responsible for tone, test, and tagging the connection points on the AT&T side of the IDF. The Government is responsible for properly labeled connection points on the Government's IDF, and for all connections between the AT&T side of the IDF and the Government's side of the IDF. In instances where AT&T supplies the IDF and requires connections to the existing IDF, the Government is responsible for providing cross-connects via other direct costs. AT&T will supply an IDF for new locations (where no IDF exists), or where there is no capacity on, or access to, the existing IDF. For further information, see Section C.2.1.5 of the MAA contract(s). **Figure E.1-5** depicts AT&T's responsibilities (dark shading), and the Government's responsibilities (light shading), for SDP 4.

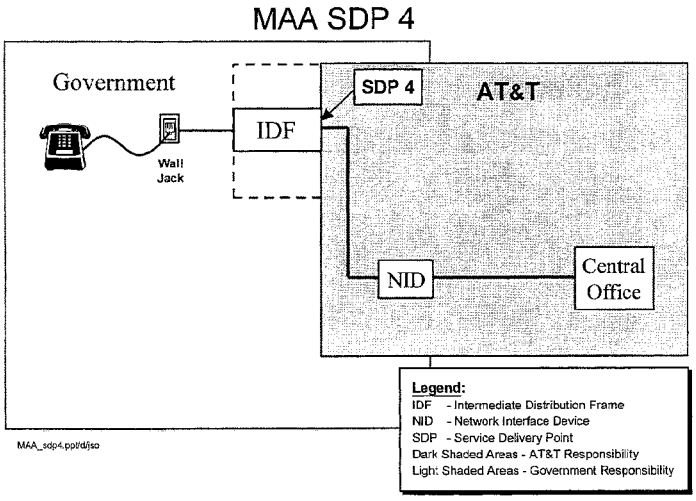

Figure E.1-5: Depicts an SDP 4 Configuration Only

SDP 5:

Service to the telephone jack (RJ11 for analog applications; RJ45 for digital applications). AT&T will supply an IDF and/or the jack for new locations (where no IDF and/or jack exists), or where there is no capacity on, or access to, the existing IDF and/or jack. The Government is responsible for all connections from the jack to equipment on their premises. For further information, see Section C.2.1.5 of the MAA contract(s). **Figure E.1-6** depicts AT&T's responsibilities (dark shading), and the Government's responsibilities (light shading), for SDP 5.

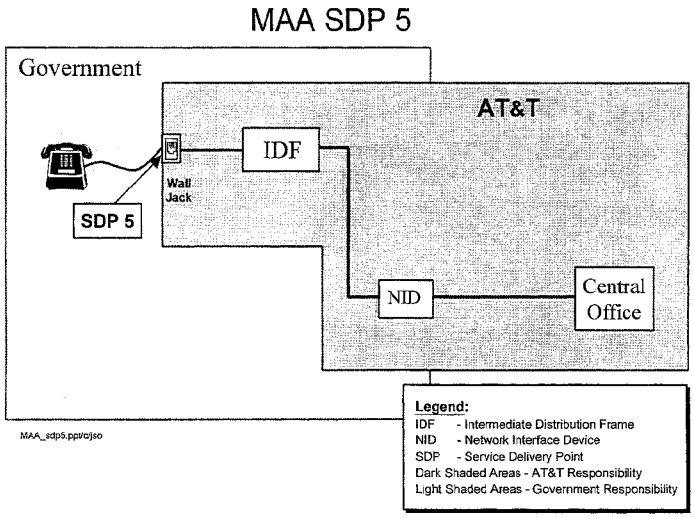

Figure E.1-6: Depicts an SDP 5 Configuration Only

SDP 6:

Service to the desktop including the telephone set. **Figure E.1-7** depicts AT&T's responsibilities (dark shading), and the Government's responsibilities (light shading), for SDP 6.

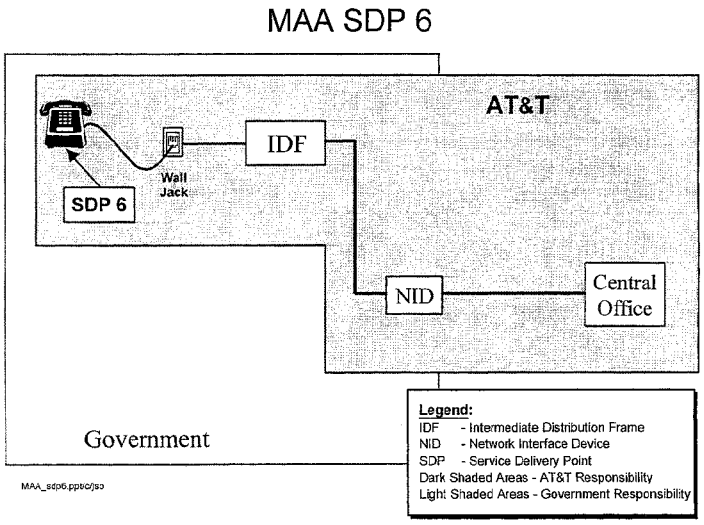

Figure E.1-7: Depicts an SDP 6 Configuration Only

Part 2: SDP Responsibility Matrix

Table E.1-1 responsibility matrix identifies the specific roles and responsibilities of both the Government and AT&T, by SDP, for each of the key tasks that must be accomplished to provide services under AT&T MAA contracts.

Table E.1-1: SDP Responsibility Matrix

#	Activity	SDP 1	SDP 2	SDP 3	SDP 4	SDP 5	SDP 6
1	Identify to AT&T locations where service is to be provided	G	G	G	G	G	G
2	Pre-qualify agency for MAA program	G	G	G	G	G	G
3	Request from the Government access to common space or telephone equipment rooms in MAA Government owned or leased buildings	A	A	A	A	A	A
4	Provide AT&T access to common space or telephone equipment rooms in Government buildings where service is to be provided	G	G	G	G	G	G
5	Perform agency telecommunications needs assessment	G or A	G or A	G or A	G or A	G or A	G or A
6	Perform assessment of common space equipment for Type I or Type II access	A	A	A	A	A	A
7	Deliver site assessment to the Government when incompatibilities or non-compliant situations have been identified	A	A	A	A	A	A
8	Provide AT&T with direction to proceed regarding site assessment	G	G	G	G	G	G
9	Have initial end-user contact meeting to understand what initial customer needs are, frame-out service order, clarify roles and responsibilities	G and A	G and A	G and A	G and A	G and A	G and A
10	Provide AT&T with initial data or service request (including but not limited to customer service record (CSR) and/or service profile data from incumbent provider, SDP, service type, agency contact, features, usage information, line numbers, directory listings, configuration groups, line class codes, IDF/MDF mapping, dialing plan, and requested service timeframe)	G	G	G	G	G	G
11	Develop and deliver initial price quote to Government contracting officer	A	A	A	A	A	A
12	Manage all Government contractors and customer agencies to accomplish end-to-end service implementation	G	G	G	G	G	G and A
13	Request access from the Government	A	A	A	A	A	A

#	Activity	SDP 1	SDP 2	SDP 3	SDP 4	SDP 5	SDP 6
	to locations where service is to be provided						
14	Provide for AT&T access to premises service location and provide relevant floor plans and furniture layout, including closet locations	G	G	G	G	G	G
15	Provide riser cable capacity, horizontal wire, IDF wiring information, and IDF room size to AT&T	G	G	G	G	G	G
16	Identify power and HVAC requirements for installation	A	A	A	A	A	A
17	Provide space, power and HVAC requirements for installation	G	G	G	G	G	G
18	Perform site assessment of premises distribution facilities up to the ordered SDP	N/A	A	A	A	A	A
19	Deliver site assessment to the Government when incompatibilities or non-compliant situations have been identified	A	A	A	A	A	A
20	Provide AT&T with direction to proceed regarding site assessment	G	G	G	G	G	G
21	Tone, test, and tag at the AT&T side of the IDF	G	G	G	A	A	A
22	Label Government side of IDF	G	G	G	G	A	A
23	Tone, test, and tag at the AT&T side of the NID	A	A	A	A	A	A
24	Label Government side of NID	G	A	A	A	A	A
25	Identify to AT&T updated and current existing station equipment, telephone numbers, features, number of lines, SDP, service type, agency contact, features, usage information, line numbers, directory listings, configuration groups, line class codes, IDF/MDF mapping, dialing plan, and requested service timeframe	G	G	G	G	G	G
26	Analyze CPE requirements and determine configuration	G	G	G	G	G	A and G
27	Perform station review	A	N/A	N/A	A	A	A
28	Update description of customer service to be provided (prepare cut sheets)	A	A	A	A	A	A
29	Confirm directory assistance / directory listings	G	G	G	G	G	G
30	Provide voice mail address station mapping (with AT&T voice mail)	A	N/A	N/A	A	A	A
31	Provide voice mail address station mapping (with Government provided voice mail)	G	G	G	G	G	G
32	Order SMDI/SMSI link (when using Government-provided voice mail)	G	G	G	G	G	G

#	Activity	SDP 1	SDP 2	SDP 3	SDP 4	SDP 5	SDP 6
33	Configure and provide inside wire	G	G	G	G	A	A
34	Approve station review data	G	G	G	G	G	G
35	Establish order freeze date; freeze order	A	A	A	A	A	A
36	Create and deliver final price quote and description of services to be provided to CO/COTR	A	A	A	A	A	A
37	Issue order (SF300) to AT&T (including PIC designations for domestic and international LD)	G	G	G	G	G	G
38	Order CPE	G	G	G	G	G	A
39	Order number porting from ILEC for existing lines (N/A for new installations)	A	A	A	A	A	A
40	Provide order acknowledgement to the Government	A	A	A	A	A	A
41	Provide customer cutover plan (including targeted due date)	A	A	A	A	A	A
42	Place order for LD trunks with LD vendor	G	G	G	G	G	G
43	Order other necessary trunks, e.g., PRI for video service	G	G	G	G	G	G
44	Do cross-connects at IDF	G	G	G	G	A	A
45	Do cross-connects at NID	G	A	A	A	A	A
46	Provide SDP-relevant customer training on system and related features to the Government	A	A	A	A	A	A
47	Provide customer training on the use of telephone sets	G	G	G	G	G	A
48	Provide access to service location to AT&T for installation of required equipment	G	G	G	G	G	G
49	Provide transmission facilities and associated equipment	A	A	A	A	A	A
50	Manage Government contractors for installation	G	G	G	G	G	G
51	Manage Government contractors for testing	G	G	G	G	G	G
52	Test dial tone, features and PIC/LD trunk at the NID	A	A	A	A	A	A
53	Test dial tone, features and PIC/LD trunk between the NID and the RJ21X	G	A	N/A	N/A	N/A	N/A
54	Test dial tone, features and PIC/LD trunk between the NID and the multiplexer	G	N/A	A	N/A	N/A	N/A
55	Test dial tone, features and PIC/LD trunk between the NID and IDF	G	N/A	N/A	A	A	A
56	Test dial tone, features, and PIC/LD trunk between the IDF and RJ11/RJ45	G	N/A	N/A	G	A	A
57	Test dial tone, features and PIC/LD trunk at the telephone set	G	N/A	N/A	G	G	A

#	Activity	SDP 1	SDP 2	SDP 3	SDP 4	SDP 5	SDP 6
58	Test porting of existing numbers	A	A	A	A	A	A
59	Test intra- and inter-agency dialing plan	A	A	A	A	A	A
60	Service completion notification provided to the Government (begins 72 hour service acceptance)	A	A	A	A	A	A
61	Acknowledge service acceptance to AT&T	G	G	G	G	G	G
62	Provide cutover test final report to the Government	A	A	A	A	A	A
63	Initiate billing after service acceptance period	A	A	A	A	A	A
64	Manage Government contractors for trouble shooting	G	G	G	G	G	G

LEGEND: ***A = AT&T (could include an AT&T subcontractor)***
G = Government (GSA and/or agency; could include a Government subcontractor)
N/A = not applicable

Mr. TOM DAVIS OF VIRGINIA. Mr. Payne.

Mr. PAYNE. My name is Jim Payne, senior vice president for Qwest Government Systems. I am pleased to be here to discuss the MAA's which constitute a significant portion of the FTS Program.

Qwest is the fourth largest long distance provider in the United States, and we are also an international carrier and provide local services.

This hearing is about the progress of the MAA Program and whether the program has accomplished its primary goals, ensuring the best services at the best prices for the government and maximizing competition for services. To that end, I will provide a brief overview of Qwest's perspective on three critical MAA questions.

What was the goal of the MAAs and why are we here? Chart 1 shows the goals. The goal was to establish a new paradigm reflecting the 1996 Telecom Act. It was to be the blueprint for the future. The paradigm includes three distinct contract vehicles: FTS2001, which we had a hearing about in April; the MAAs and the Niche contracts.

The government would have at its disposal a single, integrated program that forces continuous competition, innovation and low prices.

The second question, what is the current status of the MAA Program? Many parts of it are broken, but I do believe we can fix it. To date Qwest has won MAAs in Albuquerque, Boise, Denver, and Minneapolis based virtually on identical RFP requirements, yet our experiences in each city have been vastly different. With the exception of Minneapolis, in no case has a rapid transition been achieved. Further, the guiding principles promised that long distance would be in our contracts within 1 year after the first FTS2000 contract was awarded. It has not happened.

Our MAA experiences have been sobering. We identify the questions the committee has provided and we have some concerns. I would invite you to look at some of the examples. In every city instead of dealing directly with Qwest, the end user agencies are forced to deal needlessly and in many cases, exclusively through the GSA.

In Denver, for example, a customer had selected Qwest but the GSA redirected the order to a competitor. This certainly was not what we had anticipated.

The GSA contract management fee that applies to MAAs ranges from a low of 25 percent, and I heard an even greater high of 85 percent. When comparing the GSA to itself and other parts of GSA, you can see these overhead management fees are unprecedented.

The MAAs are voice centric. New and enhanced services such as DSL are not in the contracts that Qwest provides.

There is a lack of consistent communication between GSA here in Washington and their regions, and it has delayed transition success. Regional and strategic MAA difficulties are not being handled in a timely fashion. It appears to Qwest that GSA's focus is largely on FTS2001 problems and not on the MAAs, thus competition has not been fully achieved.

It is clear that the FTS2001 minimum revenue guarantee dominates the GSA focus. This issue has had a cascading impact on the

MAAs by delaying the timely addition of long distance to the MAA contracts. This is not the deal that Qwest signed up for.

What are Qwest's recommendations? Making these recommendations, Qwest understands the provision of service to the government is subject to the requirements of the Telecom Act and FCC policies. We believe our recommendations are consistent with all these requirements as well as focused on the MAA contract principles and the guiding areas.

Our recommendations are: GSA must adapt a more balanced, overall management structure for FTS starting with the same management fee across all the FTS programs and they should not exceed 8 percent.

The GSA must stop inserting itself in many cases needlessly between the vendors and the agencies. We believe this is a waste of tax dollars and does prevent competition.

The GSA must adopt best practices using tools and methods so the agencies can make informed decisions and demonstrate accountability.

We believe the GSA must commit to and publish a meaningful schedule to deliver long distance services through the MAAs as well as the other suggestions we are making today. We recommend that the GSA issue a schedule, and we offer one on the board here which clearly demonstrates dates and deliverables to introduce long distance services.

Let me emphasize, the MAA crossover process should be quite simple. I emphasize we need clear dates and clear deliverables.

In summary, these actions and recommendations are critical to putting FTS2000 back on track and I believe GSA does add value to the process. However, please don't ask me to choose between the GSA and my end user agency.

Thank you for the opportunity for Qwest to present its views this afternoon.

[The prepared statement of Mr. Payne follows:]

WRITTEN

TESTIMONY

OF

JAMES F. X. PAYNE

SENIOR VICE PRESIDENT

QWEST COMMUNICATIONS INTERNATIONAL INC.

BEFORE THE

SUBCOMMITTEE ON

TECHNOLOGY AND PROCUREMENT POLICY

U. S. HOUSE OF REPRESENTATIVES

June 13, 2001

I. Introduction

Good afternoon Mr. Chairman and Members of the Subcommittee. My name is Jim Payne and I am Senior Vice President of the Government Systems Division of Qwest Communications International Inc. I am pleased to be here to discuss the Metropolitan Area Acquisitions – known as the MAAs. The MAAs constitute a significant portion of the Federal Telecommunications Service (FTS) program. This Congressional hearing is an appropriate follow-on to the April 26, 2001 FTS program hearing. I sincerely commend this Subcommittee for convening hearings on these critical FTS issues.

Qwest is the fourth largest long-distance provider in the United States and provides businesses, government agencies, and consumers around the world with reliable, scalable, and secure broadband Internet communications. The core of Qwest's business--its backbone--is its network. Qwest's network spans more than 106,000 miles around the globe, including the domestic backbone network that reaches 150 cities, a 12,500-mile cross-European KPNQwest network scheduled for completion this year, and 13,000 miles of undersea cable linking the United States with Japan and the Asia-Pacific area. The company, headquartered in Denver, Colorado, began in 1997, and is led by Chairman and CEO, Joseph P. Nacchio. Qwest has revenues of $19 billion a year, serves more than 30 million customers in the United States and abroad, and employs approximately 65,000 people worldwide.

Because of the Qwest merger with, US WEST, Qwest has become a local service provider in the 14-state region that was US WEST's territory. Qwest was awarded the

first of its four MAA contracts in May 2000 and is an advocate of and participant in GSA's competitive FTS program through the MAAs. We look forward to continued participation in this program by offering agencies our industry-leading technology and service commitments at the lowest possible prices.

Qwest's commitment to providing local services is demonstrated by its investment within its 14 state region. Further, by its 25-city expansion of local fiber networks outside of that service area Qwest continues to invest in the future. Qwest exceeded targets for deployment of DSL and wireless services in 2000, and we expect continued significant growth.

I have been the Senior Vice President of the Qwest Government Systems Division since August 1999. The division was formed in 1998, and since then, has expanded to become an increasingly significant player in the government market. For almost 15 years, I have served the government market and achieved major contract expansions and wins for not only Qwest but also my previous employers -- Sprint and GTE. I have worked closely with the GSA for most of that time.

Mr. Chairman, Qwest will share its perspective on the six critical questions facing this Committee in the vitally important MAA environment.

- The problems that have impacted our ability to transition agencies in MAA cities
- Our view of the communication between national GSA and the regional offices on contract administration and management

- The GSA regions' ability to resolve transition difficulties in a timely manner
- The degree to which the competitive landscape envisioned for the program has been achieved
- Recommendations to GSA to improve the MAA program
- The regulatory issues that have hindered the program goals in MAA cities

In short, the purpose of my appearance today is to continue the discussion begun in this room on April 26: to reiterate the FTS Program Goals, to highlight the government's progress toward achieving these goals -- especially as related to the MAAs -- and to spell out what can be done to accelerate that progress while correcting gaping deficiencies.

II. The Guiding Principles: the FTS Program Goals

The post-FTS2000 concept development process established the foundation for the current MAAs and the FTS2001 contracts. This structural examination of FTS2000 included a long series of studies by a special interagency task force; the submission of white papers by industry and academics; the work of GSA and Mitretek, and finally, the Congress. The conclusion was that a new paradigm had to be developed.

The new model was affected by two legislative watershed events: first, the passage of the Information Technology Management Reform Act of 1996, referred to as Clinger-Cohen and second, the passage of the Telecommunications Act of 1996 (P.L. 104-104). Clinger-Cohen changed the way the government acquired its information technology services. It abolished the decades-old GSA dominance as the single source of supply to all government for information technology services. It mandated the broad use

of bottoms-up, requirements-driven purchasing for technology. And, in its wake, the first test of its effectiveness would be the FTS2001 and MAA RFPs.

Likewise, the Telecommunications Act anticipated a new day in telecommunications services. The watchword of the future would be competition, not just in the divested long-distance, but now, competition would extend into the local loop offering competitive dial-tone services. The bold new future of telecommunications would include Regional Bell Operating Companies, Independent Local Exchange Carriers, Competitive Local Exchange Carriers, and Inter exchange Carriers offering all distance services. It was into this future world that the government sought to make its mark.

There was significant discussion about how to shape the post-FTS2000 acquisition in the face of each of these landmark pieces of legislation. Should FTS2001 offer both local and long-distance? If so, would that "overhang" the marketplaces' readiness for such a compilation? The Congress, the industry, the agencies, and GSA developed an almost Solomon-like compromise.

FTS2001 contracts

The FTS2001 contracts established the basis for continuing support in the long-distance market with the addition of Internet services, international services, and the promise to add local services as it evolved. The user community was expanded, from the US government only, to include tribal governments with the possibility of adding state

and local governments. Minimum Revenue Guarantees (MRGs) were set at levels to entice participation by industry players and were to be applied across all services. In contrast, the smaller FTS2000 minimum revenue guarantees had been applied only to voice services. The transition period was set at one year, the same period over which no MAA contractor would be allowed to enter the long-distance marketplace. The construct was wisely set up to allow the FTS2001 providers a fair start out of the blocks to establish themselves before entering the competitive fray.

MAA Contracts

The MAA contracts were established to likewise provide a broad array of possible users. In many cases, dual awards were made in cities to allow for agency choice and competition within the markets. As in FTS2001 contracts, minimum revenue guarantees were established to attract competitors. The MRGs for the MAAs are much smaller. They are $100K per city, split among the awardees. In Denver, Qwest is guaranteed $33.3K, which will be reduced further if a fourth contractor is brought in; $50K in Minneapolis, and $100K each in Boise and Albuquerque. These guarantees were meant to be applied across the full array of service offerings. In addition, like FTS2001, to enable contract holders to successfully transition and have a fair start, no new competitors would enter the specific geography for one year after each award. After that one year period, other contractors – either MAA contractors from other regions or FTS2001 contract holders – would be eligible to add competing services to their contracts to allow additional choice and competition in the marketplace.

Niche Contracts

The role of the niche contracts was to target competition in particular areas. The Guiding Principles specifically identified wireless services as an area that met this criterion. Over time, other areas, including the commerce, Internet, electronic mail access (CINEMA), were also identified. The focused objective was to add competition to an area that required a jump-start.

The government would have, at its disposal, a single, integrated program comprised of a competitive, overlapping web of contract vehicles that would force continuous competition, innovation and low prices. The rules of the road were codified in the Guiding Principles that govern the entirety of the FTS program. The Guiding Principles represent a manifesto upon which the government marketplace agreed and charted its destiny.

Competition was to be the rule, not the exception. The Guiding Principles expected that MAA contractors would be ready to enter the long-distance market immediately after the forebearance period – meant only to give awardees of MAAs and FTS2001 a one-year "jump start" on their contracts. A construct was developed for the delivery and proposal of optional services.

Optional services were defined, for long-distance providers, as the ability to provide local services, and, for local service providers, as the ability to provide long

distance services. In order to provide the optional services there were a few pre-qualifications required:

1. "Only contractors (i.e. those companies with either an FTS2001 or an MAA contract) may offer optional services.
2. "Optional services may be added to the contract as modifications within the scope of the FTS2001 and MAA contracts.
3. "The Government will not require service or geographic ubiquity on any optional services.[1]"

The combination of the optional services offered and available under FTS2001, the MAAs, and the additional competition enabled through targeted niche contracts yielded an elegant, fully competitive program. This elegant program served a single beneficiary: the taxpayer. In summary, the FTS Program Goals anticipated:

- a single integrated program supporting competition in local and long distance markets
- multiple players in FTS2001, MAA and niche contracts to spur competition
- swift introduction of commercial products, services, and new technologies as well as reliance on contractor's commercial infrastructure
- agency choice in a non-mandatory contracting environment
- market conditions rather than government oversight would govern pricing and technology decisions

[1] Statement of Principles Dated April 4, 1997, No. 16.1 through 16.3

III. The Current Roadblocks Slowing Progress

Denver, Colorado; Boise, Idaho; Albuquerque, New Mexico; and Minneapolis, Minnesota are each cities in which Qwest has gained experience as a provider of MAA services. The experiences in each locality are different. None has been a rapid transition as was envisioned by the contractors, GSA, and the end-user agencies.

The basis upon which Qwest participated as a bidder on the MAAs was the promise of the FTS program at large. Qwest prides itself on being a vigorous competitor, dedicated to providing our customers with the most forward thinking technologies and solutions based upon their understood requirements. It was on that basis that we approached the MAAs.

The promise of the MAA contracts moving to quickly include long-distance service was built into the forecast and business case upon which each of these bids was submitted and priced. The aggressiveness with which we have pursued these opportunities has been noteworthy. Our post-award experiences, however, have been sobering. In Denver, for example, a customer was prepared to issue an order to Qwest for services only to have the GSA regional office determine that the order for service should go to the other MAA contractor.

Our principal expectation was that the region's actual needs were reflected in the requirements of each MAA. This has unfortunately proven to be a false assumption. There has apparently been little participation by the regions in the formulation of the requirements. Our experience leads us to conclude that the regions are ill prepared to deal with the solutions proposed by the winning MAA contractor.

For example:

- There is a substantial amount of disengagement between what is perceived by the regions to be a headquarters-driven acquisition and a regional implementation. These artificial barriers between headquarters and the regions are a disservice to the end-users who are deprived an opportunity to assess what is in their best interest. This condition is exacerbated by a predisposition to have end-user agencies deal exclusively through GSA as opposed to through the MAA contractor. It is as if agencies, including GSA, look at the MAA as keeping plain old telephone service (POTS) as against an opportunity to take advantage of competitive alternatives to a broad array of solutions.

- Qwest has proposed leading-edge billing applications with which regions are unprepared to deal. It has been our experience that rather than move forward to use Internet enabled technologies that facilitate ordering, provisioning and billing, the regions would rather move backward to have a retrofitted solution compatible with legacy platforms.

- When offered opportunities to assess and optimize current network configurations, the regions are too frequently resolved to make use of what is already there without performing any analysis.

GSA has a misguided sense of how to manage multiple award contracts in a given city where there is a dual award. In Denver, when Qwest has tried to engage in meetings with individual agencies, Qwest has been informed that such interaction is not permissible unless "equal contact" is provided to that client agency by the other provider. It is *not* GSA's role to assure equal contact between MAA contractors and agencies, merely equal opportunity to access these customers. GSA's role is to facilitate and not dictate to the vendors to whom they may sell. It is GSA's role to administer the contracts fairly but let the competitive process of selling take place.

Many of the circumstances in which Qwest has found itself are related to issues associated with the stalled FTS2001 transition. Decisions associated with FTS2001 services seem to have taken pre-eminence over what makes business or economic sense to agencies, networks, or technology. Because of the lack of tools to make rational decisions considering the full array of options available, an FTS2001-centric approach is more usually taken.

The lack of standards and guidelines goes beyond mere method and procedure for conducting day-to-day contract administration. It also goes to the ability of the regional

team to compare and contrast the relative benefits of acquiring services from one contracting vehicle over another. This lack of preparedness stands in the way of transitioning customers, optimizing their services and advancing their missions. As a practical matter, much of the education of the GSA regional staff is left to the MAA contractor. Moreover, because the construct of the MAA pricing is new and relatively complex when compared to buying off tariffs, there is an expectation on the part of the regions that many services are free even though prices are clearly established.

Some of the lack of coordination across the country is evidenced in the disparate needs for billing requirements. Qwest has provided tools for electronic access to billing information based upon RFP preferences specified formats and delivery in these media. In one region, despite the wide array of electronic billing options available from Qwest, that region remains committed to a GSA-provided medium known as TOPS. The retrofit to accommodate this method may or may not be recoverable from the government. However, it is clear is that these requirements, if made known during the bidding process, would have and could have been built into the assumptions and business case of Qwest as a bidder. The cost of re-engineering after award is costly to the vendor to be sure. But the true cost is to the process and the end-user who is frustrated at not having their needs met and to the potential transition delays caused.

As importantly, the evolution to commercially available services is thwarted by continued reliance on legacy products and services. Some of what these differences in billing requirements indicate is a lack of GSA-wide planning and standards across the FTS program. Billing is always an area rife with potential dissatisfaction. It is followed

closely by ordering and provisioning information. A failure by GSA to be prepared to deliver state-of-the-art capabilities to its users only delays their ability to become independent and sophisticated users of new and emerging services.

Finally, MAA contractors have made significant investments to deliver on the myriad deliverables required by the RFPs. In too many cases, these deliverables still create requirements that are beyond what commercial customers expect. To reduce prices and assume increased performance requirements is a volatile combination especially if the opportunity to expand the market to the long-distance arena remains stalled.

Qwest clearly understands that the world in which we participate is highly integrated. We did not expect that this integrated environment, reflective of the current market, would be bound by thinking, processes and practices more closely aligned to the former non-competitive paradigm. The Guiding Principles presumed an active, sales and marketing-driven environment in which vendors, agencies and the taxpayer would thrive.

We seem to be operating in a series of disintegrated fiefdoms of technology, organization, and tradition. This arcane, balkanized approach – highlighted by the gulfs between headquarters and the region and FTS2001 and the MAAs -- is yielding a new agency dependence on GSA. This dependence increases overhead to the end-users who feel compelled into relying on GSA as the monopoly service provider.

The free market, opportunity-driven program in which Qwest elected to participate has been stalled by a new set of constraints. Some are related to misplaced concerns about FTS2001 minimum revenue guarantees. Some are due to the appropriation by GSA of industry worst practices. GSA, through the creation of service-based "value added" rates, has hidden its actual costs from the agencies. Something has gone wrong.

The current and future scope of the MAAs was specific. After a one-year forebearance period, contractors would be able to add optional long-distance services. The government, pursuant to the Guiding Principles, "will not require service or geographic ubiquity on any optional services.[2]" Business cases were developed based upon the promise that the forebearance period would be lifted in a timely manner and additional services would be able to be delivered.

As a provider of leading-edge technologies, we fully expected to be able to quickly add the full array of our offerings to our MAA contracts for timely inclusion. To date, due to the lack of GSA infrastructure to process contract modifications, customers have been deprived of new services.

Equally frustrating is the fact that agencies are unable to go directly to MAA contractors. They are required to interface directly with GSA and incur one of two GSA categories of management fees: "Value Added" or "Full Service." The distinction between the two is not clear in terms of services rendered. Since agencies lack the ability

to by-pass GSA, it in effect holds the agency hostage to GSA and assures GSA revenue whether or not its services are desired by a customer agency. In the end, agency choice is sacrificed. If an agency requires the use of GSA in a "value added" or "full service" way, why should not GSA publish labor rates that would apply rather than hiding the rates in an overhead rate that may or may not reflect their actual costs.

Agencies expected to be able to get value: value added services at a competitive price. The problem that precludes agencies from getting these things is the lack of appropriately focused contract

GSA routinely quotes savings in the billions of dollars associated with the MAAs. But the quoted savings are those only GSA is experiencing. These savings are obliterated by the addition of steep contract management and value added fees that MAA contractors are obligated to be pass on to the agencies. This practice hides the deep price reductions that the vendors have put forward and allows GSA to pocket the difference. No amount of purported value-added support can legitimize the gouging of agencies for unsolicited interference by GSA. Indeed, no vendor in a cost-based environment would be authorized to pass such fees onto the government without proven benefit.

For example, the exorbitant contract management fees that have been set up for the MAAs have resulted in fees ranging from 40%[3] to as high as 75%[4]. GSA's management

---

[2] Statement of Principles Released April 4, 1997 No. 16.3
[3] Qwest has yet to be assigned the management fee for its Boise MAA although award was made in August 2000.
[4] Communications Daily, December 7, 2000.

structure and lack of seamless integration in the FTS program organization is resulting in fees that far outpace the 8% fee that is assessed on FTS2001 services. The 8% fee is likewise out of step with the Federal Supply Service's 1% fee for what are plainly commercial services.

IV. Conclusion and Recommendations

The lack of consistent communications between national GSA and the regional offices on contract administration and management issues has impacted our ability to transition agencies in MAA cities. Without an infrastructure to properly interpret and support regulatory issues affecting the competitive landscape envisioned for the program, competition has not been achieved nor have regional transition difficulties been handled in a timely manner. We therefore make the following recommendations that are essential to the Guiding Principles.

1. GSA must adopt a structure for management that integrates the entire FTS program and immediately reduce management fees to no more than 8%. The Guiding Principles were not created as options. They were created to be the foundation upon which the FTS program would operate. That foundation presumes a GSA infrastructure in place to support it. Qwest urges this Committee to assist GSA in adopting an efficient structure for management. Qwest likewise urges that communication and accountability across the agency be enhanced so that the requirements of individual MAAs be in alignment with user needs. Planning cannot be an afterthought.

2. The GSA must deliver a meaningful schedule to deliver long-distance services through the MAAs. If Qwest can manage to use a simple Gantt chart to prepare its testimony, certainly GSA can issue as schedule to clearly introduce long-distance services.

The marketplace cannot afford to wait on GSA to fix its internal problems. GSA should immediately begin to accept proposals from MAA contractors to deliver long-distance services consistent with the Guiding Principles, the modified FTS2001 contracts, the advice of GAO, and confirmed the stated desires expressed by Sandra Bates, GSA's FTS Commissioner, in her April 26 testimony before this Subcommittee. These proposals should not languish for two years as some other contract modification can and do within GSA. Rather, a team should be immediately established to process these modifications so that the market may benefit from enhanced competition. In short, do the hard work necessary to foster competition.

3. GSA must stop inserting itself between vendors and agencies. We believe this is a waste of tax dollars and preventing competition. GSA cannot be perceived to be a roadblock or as an entity serving its own self interest. Give user agencies the choice that they deserve. GSA should show a preference for direct contact between end-user agencies and the vendor community. GSA insertion into the process should be the exception rather than the rule. Its role is that of administrator of the contracts. GSA must be willing to accept that even in locations where users have traditionally gone through

them to acquire their local services, vendors always have the responsibility to offer different solutions to their potential customers.

GSA cannot continue to operate as the *de facto* monopoly provider to the agencies. The era of mandatory use is over. The age of competition is upon us. Let the marketplace move forward free of legacy mindsets.

4. GSA must adopt best business practices using tools and methods to make informed decisions and demonstrate accountability. Whatever tools are necessary to enable continuous assessment of services should be developed and provided to the government. Certainly the marketplace has tools that are able to perform such assessments as standard off-the-shelf items. The days of transitioning services once are long gone. GSA and the agencies must embrace the fact that in a competitive marketplace assessment of needs is an on-going practice. Performing such analysis to assure that agencies get the best deal is part of the due diligence that taxpayers demand.

A vibrant and competitive market will always mean that there is movement of services and enhancement of services. Perpetual change is and should be a constant. Stagnation is the enemy, not continuous improvement.

5. The GSA must publish a detailed plan and schedule to implement all these recommendations we've made today. GSA should publish a fully articulated plan and schedule to accomplish all recommendations made today. That plan should introduce sunshine into the process of managing the FTS program across the board. The plan and

schedule should have absolute dates upon which the public, agencies, and contractors may rely in making business plans.

Status of MAA transitions should likewise be published. All of this information should be made available on the GSA website. The transition details for the MAAs should mirror that which was provided for FTS2001 showing status by product and service. In addition, the plan should specifically demonstrate the reduction and simplification of the role of the GSA.

These actions and recommendations are critical to putting the FTS Program back on track. It is not too late, but time is of the essence. And let me add before I close, that although I am committed to the GSA, who can add value to this process, I want to make certain that if I'm asked to choose between the GSA and my end-user customers I will always chose the end-user. I have built a career on keeping commitment to my end user agencies and won't stop now.

Mr. Chairman, I thank you for the opportunity for Qwest to present its views this afternoon. I will gladly answer any questions that you may have.

Mr. TOM DAVIS OF VIRGINIA. Mr. Lucas.

Mr. LUCAS. My name is Randy Lucas and I am the vice president, general manager of Verizon's Federal team. Verizon Federal is a part of Verizon's Enterprise Solutions Group and is specifically organized to serve the information technology needs of our Federal customers. Verizon Federal has numerous contracts with various Federal agencies that provide a host of information technology and telecommunications services.

From Verizon's perspective, the MAA process has generally worked well and been a success but it could be made even better if GSA continues to communicate with industry on processes and guidelines that dictate how the MAA program will evolve.

Verizon has been a supporter and active participant in the MAA Program since its inception. In fact, Barbara Connor, the former president at Bell Atlantic's Federal Government Line of Business testified before the Committee on Government Reform 4 years ago, encouraging Congress to support the separation of local service and long distance services in developing the government's procurement strategy. A lot has changed in this industry since that time and real progress has been made in the implementation of the MAA Program.

The stated goals of the MAA Program have been to sustain price reductions for local telecommunications services in selected metropolitan areas; provide a flexible, contractual vehicle with high quality services; and to create a contractual structure that encourages agency cooperation and aggregation of requirements. GSA is to be commended on the pursuit of these goals and the impact the MAA has had in fostering competition.

Verizon is in the unique position of having seen the MAA from several different views. One of the first cities awarded was New York City. We lost. The sole award was made to AT&T. In January 2000, we were awarded the WITS 2001 contract which GSA considers part of the MAA Program. We won a multiple award contract in Buffalo along with AT&T. In Baltimore, where we were the incumbent vendor, we lost in a single award decision to Winstar. We were awarded a contract in Boston, a multiple award city with contracts also going to AT&T, SBC and Winstar. Earlier this year, Verizon was awarded the first crossover contract to go back to New York City to compete for services there.

As you can see, we have seen multiple awards, single awards, we have won, we have lost, we have crossed over, just like the program strategy envisioned.

Though the MAA Program, from our view, has had its successes, we believe there are areas for improvement. We would suggest that GSA more strictly enforce the post-award forbearance timeframes for the awarded cities. While Verizon understands and appreciates the need for the fair consideration process, we suggest the process needs to be expedited so that customers can take advantage of the new services and better prices offered in the MAA contract.

The process for technology refreshment and the ability to acquire up to date goods and services are potential areas for improvement.

While the MAA Program offers some limited data services, customers cannot currently buy state-of-the-art telecommunications technology such as frame relay, ATM or SONET services. Federal

Government customers want and need these technologies to meet the wants and needs of their customers, ultimately the taxpayer.

Industry needs to be allowed to provide these types of services as well as voice over IP, gigabit ethernet, and DSL based solutions. As voice, data, and video networks converge to a common platform, the MAA contract should allow for the rapid inclusion of these new technologies.

Verizon is still prohibited from providing long distance services in 11 States and the District of Columbia. This is an important regulatory hurdle as we wait for the summer release of the crossover guidelines for FTS2001. If GSA requires that all potential entrants to that market have to be able to provide long distance services to every State, Verizon will be locked out. If we will be able to offer long distance services as an option on our MAA contract, we can compete where we have been approved to provide long distance services. This will mean more choices for our customers and a better deal for the taxpayer.

I indicated that we have competed both successfully and unsuccessfully against AT&T, SBC and Winstar for local services via the MAA Program. In each case, we were the incumbent local exchange carrier. The opportunities that the MAA presents would be even more attractive if vendor partners knew they could bundle voice, data, long distance and Internet services on the same contract platform.

Verizon values our partnership with GSA and our successes within the MAA Program. We have found the representatives from national GSA, as well as those from the regions, have been more than willing to talk through issues seek feedback and discuss process improvement. The MAA is a good strategy for achieving the primary objectives. Can it be improved? Certainly, it can. It is a new process. In my 19 years of serving this market, I have found precious few things that cannot be improved.

I thank the committee for the opportunity to discuss the MAA Program. I would be glad to answer any questions you may have.

[The prepared statement of Mr. Lucas follows:]

COMMITTEE ON GOVERNMENT REFORM AND OVERSIGHT

SUBCOMMITTEE ON TECHNOLOGY AND PROCUREMENT POLICY

STATEMENT OF RANDY LUCAS,

VICE PRESIDENT/GENERAL MANAGER OF VERIZON FEDERAL

METROPOLITAN AREA ACQUISITION PROGRAM

JUNE 13, 2001

Mr. Chairman and members of the Committee, my name is Randy Lucas, and I am the Vice President/General Manager of Verizon's Federal Team.

Verizon Federal is a part of Verizon's Enterprise Solutions Group and is specifically organized to serve the information technology needs of our federal government customers. Verizon Federal has numerous contracts with various federal agencies that provide a host of information technology and telecommunications services.

I want to thank you for giving me the opportunity to testify on the federal government's Metropolitan Area Acquisition (MAA) program.

From Verizon's perspective, the MAA process has generally worked well and been a success, but it could be made even better if GSA continues to communicate with industry on processes and guidelines that dictate how the MAA program will evolve. Verizon has been a supporter and active participant in the MAA program since its inception. In fact, Barbara Connor, the former president of Bell Atlantic's Federal Government line of

business, testified before the Committee on Government Reform four years ago, encouraging Congress to support the separation of local service and long distance services in developing the Government's procurement strategy[1]. A lot has changed in this industry since that time and real progress has been made in the implementation of the MAA program.

The stated goals of the MAA program have been to "...sustain price reductions for local telecommunications services in selected metropolitan areas; provide a flexible contractual vehicle with high quality services; and to create a contractual structure that encourages agency cooperation and aggregation of requirements."[2]

GSA is to be commended on the pursuit of these goals and the impact the MAA has had in fostering competition. Verizon is in the unique position of having seen the MAA from several different views. First, one of the first cities awarded was New York City; we lost, the sole award was made to AT&T. Second, in January of 2000 we were awarded the WITS2001 contract, which GSA considers part of the MAA program. Third, we won a multiple award contract in Buffalo, along with AT&T. Fourth, in Baltimore, where we were the incumbent vendor; we lost in a single award decision to Winstar. Fifth, we were awarded a contract in Boston, a multiple award city with contracts also going to AT&T, SBC, and Winstar. Finally, earlier this year Verizon was awarded the first crossover contract to go back into New York City to compete for services there. As you can see we

[1] Reference Statement of Barbara Connor, March 12, 1997

[2] MAA website

have seen multiple awards, single awards, won, lost, and crossed over. Just like the program strategy envisioned.

Where we have been awarded contracts we have provided service in accordance with the contract.

- Verizon was given a notice to proceed in June 2000 to transition existing service in Buffalo, NY to the MAA contract. In March 2001, 1,549 lines in Buffalo were successfully transitioned to the MAA contract.

- For WITS 2001, the Notice to Proceed was granted on June 7, 2000. Though we had proposed a two-year transition phase, we have succeeded with GSA in meeting the milestones provided in attachment A.

Verizon was awarded the Boston Contract in July 2000 and submitted further proposals in November of 2000. We successfully transitioned the first awarded system for the Boston MAA with 458 lines completed as of May 5th. Three additional awards in Boston for 802 lines are now in the project implementation phase. To date we are on track to meet the transition timeline. Order dates range from May 14 to May 31. The expected completion date is currently being negotiated.

Though the MAA program from our view has had its successes, we believe there are areas for improvement.

First, we would suggest that GSA more strictly enforce the post-award forbearance time frames for the awarded cities. For one year after the awarding of a contract in a city, no other vendor can compete in that city using a MAA vehicle. After that one year, the GSA can start another competition. Delays in providing guidance to MAA awardees on the process of submitting post-award forbearance cross-over delayed for New York City federal government customers the benefits of new services with lower prices. Specifically, these delays resulted in Verizon not being able to submit its successful crossover bid until 7 months past the one-year forbearance period. In the phase 2 cities (those cities sequenced for procurement after the initial cities of New York, Chicago and San Francisco), guidance for submitting post forbearance proposals is still on hold preventing Baltimore federal government customers from receiving a competitive proposal from Verizon (the Baltimore work previously had been awarded as a sole contract to Winstar).

Once we receive orders to provide a customer service we have had no problems in working with GSA to meet the customers' requirements. The GSA's Notices to Proceed have frequently taken a long time to be issued, however, as the GSA works through the fair consideration process. While Verizon understands and appreciates the need for the fair consideration process, we suggest the process needs to be expedited so that customers can take advantage of the new services and better prices offered in the MAA contract.

The process for technology refreshment (the introduction of new technology and services) and the ability to acquire up-to-date goods and services are potential areas for improvement. While the MAA program offers some limited data services, customers cannot currently buy state-of-the-art telecommunications technologies such as Frame Relay, ATM or SONET services. Federal Government customers want and need these technologies to meet the wants and needs of their customers (the taxpayers). Industry needs to be allowed to provide these types of services as well as Voice over the Internet (VoIP), Gigabit Ethernet, and DSL based solutions. As voice, data, and video networks converge to a common platform, the MAA contract should allow for the rapid inclusion of these new technologies.

Both in New York City and Philadelphia, the GSA requirements for "on net calling with no message unit charges" hindered Verizon's ability to respond competitively because of our regulatory limitations on providing long distance (interlata) services. In fact we did not submit a proposal for Philadelphia because of the requirement to include Camden and Trenton, New Jersey. Even though Philadelphia and NYC are two areas where we can provide "corridor service," the cost to us to satisfy GSA's requirements made our prices too high.

Verizon is still prohibited from providing long distance services in 11 states and the District of Columbia. This is an important regulatory hurdle as we wait for the summer release of the crossover guidelines for FTS2001. If GSA requires that all potential

entrants into that market have to be able to provide long distance services to every state, Verizon will be locked out. If, however, we will be able to offer long distance services as an option on our MAA contract, then we can compete where we have been approved to provide long distance services. This will mean more choices for our customers and a better deal for the taxpayer.

I have already indicated that we have competed both successfully and unsuccessfully against AT&T, SBC, and Winstar for local services via the MAA program. In each case we were the incumbent local exchange carrier (ILEC). The opportunities that the MAA presents would be even more attractive if vendor partners knew they could bundle voice, data, long distance, and Internet services on the same contract platform.

Mr. Chairman, Verizon values our partnership with GSA and our successes within the MAA program. We have found that the representatives from "national GSA" as well as those from the regions have been more than willing to talk through issues, seek feedback, and discuss process improvement. The MAA is a good strategy for achieving the primary objectives. Can it be improved? Certainly it can, it's still a new process. In my 19 years of serving this market I have found precious few things that cannot be improved.

I thank the Committee for the opportunity to discuss the MAA program.

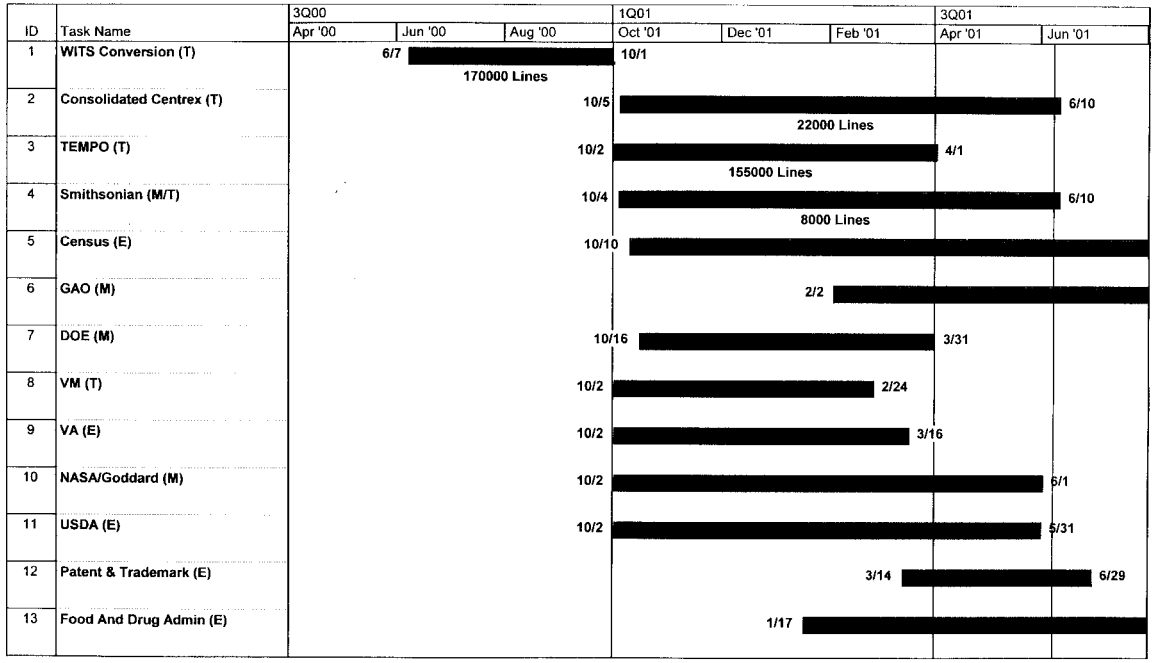

Attachment A

Mr. TOM DAVIS OF VIRGINIA. Mr. Hogge.

Mr. HOGGE. My name is Jerry Hogge, vice president of Winstar Government Solutions. I appreciate the opportunity to discuss the Metropolitan Area Acquisition Program. I am here to request your support in accelerating the pace of its implementation.

As reported in GSA's press statements, this $4 billion-plus program has the potential to save taxpayers millions of dollars this year and over $1 billion going forward if it is implemented expediently.

Winstar is a broadband services company and is one of only two competitive local exchange carriers participating in the MAA Program, and is the holder of more MAA contracts than any other vendor. Winstar is also the only vendor offering local dial tone to its customers primarily using a 38 gigahertz wireless technology.

As a competitive local exchange carrier, Winstar views GSA's MAA Program as an ideal business channel offering the opportunity to provide substantial and concentrated amounts of local voice and data services in major metropolitan areas. Winstar has competed for 17 MAA contracts, won 12 and 2 are pending decision.

Our presence in this process has undoubtedly been a key factor behind the vigorous competition that has taken place and a key part of the dramatic price reductions seen in the MAA contract prices.

As you may have read recently Winstar has voluntarily filed for reorganization under Chapter 11 of the Bankruptcy Code. We have received our initial funding, continue to provide services to our customers, are adding new customers daily and intend to emerge from this process with GSA and the Federal agencies as a prominent and strategic part of our long run business plan.

Winstar regards the MAAs as a tremendous success from a contract award perspective. However, only a minuscule part of the promised savings has been realized because most of the business promised in the contracts has yet to be implemented. Simply put, Federal customers are not being transitioned to the MAAs at an acceptable pace. Processes are lengthy, basic paperwork is slow to get done, fair consideration is inherently unfair in certain instances and conflicts exist with in-place contracts.

As of today, well over a year into Winstar awarded contracts, we have received orders for only 5 percent of the promised lines. Further, since most orders have been received very recently, only 1.7 percent of the lines forecast by GSA for the first year in our 12 cities have been installed. We believe these statistics are not uniquely loaded to Winstar but instead represent programwide failures. In fact, most of the promised MAA business remains with the incumbent RBOCs.

The drastically slow revenue flow from the MAA contracts has had a significant impact on Winstar and will ultimately impact our ability and willingness to participate in the program. The main impediments we have experienced in transitioning MAA business include administrative impediments such as slow receipt of notice to proceed, fair consideration of requests and responses, and ultimately service orders.

The average delay between the date we received a notice to proceed and our first order is almost 4 months and some cities like Indianapolis have yet to place their first order with us, resulting in the passage of an entire year where customers cannot take advantage of Winstar's reduced MAA prices.

The fair consideration process is somewhat a misnomer. Certain GSA regions apply very rigid guidelines to how vendor priced proposals are to be presented and then take months to arrive at seemingly simple buying decisions. Other local GSA offices specify which technologies can be used to satisfy a requirement such as an inground fiber deployment. This violates the contract as the specifications are to be expressed in terms of service requirements, not a definition of a specific technology or solution.

The MAA contracts are purposely uniform in their product and service content. All MAA providers are presumed to be equal in terms of technical and management merit as a result of the RQS process. Thus, post-award buying decisions should be a simple matter of comparison shopping and choosing a vendor. To date, this is not the case.

Finally, in certain MAA cities, fair consideration decisions do not always appear to be communicated. In several instances, we have not yet been notified of the outcome of fair consideration proposals we submitted in November 2000. Either we lost and haven't been notified as to why or GSA has taken more than 8 months to make a simple price comparison. Neither reason is acceptable.

The fair consideration process is further confounded by apparent conflicts with existing contracts. In Dallas, for example, Winstar's MAA service price must offset a termination fee that SBC charges GSA to disconnect its service. This external cost works against all nonincumbent MAA winners and destroys the level playing field envisioned by the fair consideration process.

Indeed, because of the incumbent's disconnect charge, GSA apparently and wrongly concludes that we are not a competitive choice since it will take many months just to break even with respect to this disconnect fee.

The MAAs are 8 year contracts and we believe we provide a better life cycle value and savings that is not being properly considered.

To the best of our knowledge, less than 10 percent of the lines forecast for our 12 cities have been transitioned. We propose a few changes to improve these results.

Simplify the transition process; speed it up; communicate the results and track performance. Transition and fair consideration are extremely measurable. A scorecard such as the one on the display that begins with the baseline circuit forecast represented to industry by GSA should be immediately implemented and tracked monthly. On the screen is a card which shows the percentage of forecast lines that have had orders placed with an MAA provider and the percentage of forecast lines that have been installed. This sort of scorecard would highlight cities that are on target and compare them to those that are not, hopefully spurring action, fixing process problems and eliminating delays.

GSA can utilize the IT fund to help defray initial one-time transition costs to a nonincumbent's network as well as other external

and equipment changeout costs that otherwise bias the purchase decision in favor of incumbent providers.

GSA's forecasts of their requirements in each city are the basis for the bargain. Millions of dollars were not invested in winning these MAA contracts just to share a $100,000 minimum revenue guarantee. Instead, we relied on GSA's detailed forecast of business and the expectation that GSA would meet those forecasts and the savings touted in its own press statements.

GSA received substantial price reductions based on the promised business. We are prepared to deliver the rates promised in our proposals and it is time for GSA to live up to the lines promised in their forecasts.

I would be happy to answer any questions you have. I appreciate the opportunity to appear.

[The prepared statement of Mr. Hogge follows:]

WRITTEN TESTIMONY OF JERRY W. HOGGE

VICE PRESIDENT, WINSTAR GOVERNMENT SOLUTIONS LLC

BEFORE THE HOUSE GOVERNMENT REFORM COMMITTEE SUBCOMMITTEE ON TECHNOLOGY AND PROCURMENT POLICY

I. Opening/Introduction

Good afternoon Chairman Davis, Congressman Turner and members of the Subcommittee. I appreciate the opportunity to appear today to discuss the Metropolitan Area Acquisition (MAA) Program. My name is Jerry Hogge, and I am the Vice President of Winstar Government Solutions LLC. I am here to discuss my company's participation in the General Services Administration's (MAA) program and to request your support in accelerating the pace of its implementation. As reported in the GSA's press statements, this program has the potential to save taxpayers millions of dollars this year - and over $1 billion going forward - *if* it is implemented expediently.

II. Who is Winstar?

Winstar is a fixed-wireless broadband services company and a Competitive Local Exchange Company (CLEC), which in the case of the MAA program is one of only two Competitive Local Exchange Carriers participating in the program. Moreover, Winstar is the only competitive local exchange carrier that is offering local services to MAA customers primarily using a fixed wireless technology to bring "dial-tone" to its customers.

Winstar has service-marked its 38 GHZ wireless technology Wireless Fiber[sm] because it offers our customers the same quality and reliability as in-

ground fiber optic systems. With this technology, Winstar offers the federal government community a solution that can be completely independent of the Regional Bell Operating Companies (RBOCs) infrastructure. Winstar's Wireless Fiber[sm] technology can be used to connect federal customers to each other such as in campus environments, to Winstar's switched and data networks, to the public switched telephone network, and to long distance networks – such as Winstar's national network or FTS2001.

When a government user places a phone call or sends data from his/her computer, Winstar uses a radio antenna located at the customer's building to transmit the data via a 38 GHz licensed radio frequency spectrum to a receiving antenna located within Winstar's network. Winstar then routes the transmission over its fiber optic backbone to the receiving customer.

By avoiding the costly and time consuming construction and trenching associated with deploying in-ground fiber systems, Winstar's Wireless Fiber[sm] technology allows broadband capacity to be extended to the federal workers' locations more rapidly and at a fraction of the initial build cost of fiber. With our Wireless Fiber[sm] technology, Winstar offers the government fiber-quality services at extremely competitive prices. Winstar's highly competitive MAA prices combined with our high quality services offer a unique and unbeatable value in the Federal marketplace.

III. What is Winstar's Interest in the MAA Program

As a competitive local exchange carrier, Winstar saw the GSA's MAA program as an ideal business channel, offering the opportunity to provide substantial and concentrated amounts of local voice and data services in major metropolitan areas. This is why Winstar initially decided to participate in the multi-year Request for Qualification (RQS) process to become technically qualified to bid on each individual MAA city. In fact, Winstar was the first CLEC to become MAA-qualified, and second among all qualified bidders in terms of reaching that milestone.

Winstar has submitted bids on seventeen (17) MAA cities; won twelve (12); and two are pending award. This level of commitment in terms of capital and personnel resources was not made lightly, but instead with reliance upon the promise of substantial amounts of business as expressed in the GSA's bid models for each MAA city.

IV. Winstar as an MAA Competitor

Winstar commends GSA on its progressive MAA initiative and congratulates them on the dramatic improvements in contract prices achieved through the MAA competition. As the holder of 12 – out of a total of 20 awarded MAA contracts --- 2 of which are single award contracts --- Winstar holds more MAA contracts than any other vendor. We believe that our positive impact on the competition is evident and it is clear that our presence in the competitive bidding

process has contributed to GSA's ability to achieve the unprecedented level (50% +) of price reductions that are a part of the MAA contracts today.

GSA conceived the MAA Program to capitalize on the competition that was designed into and promised by the Telecom Act of 1996. It sought to bring new competitors to the federal marketplace. Winstar answered this "call for competition" and established a dedicated Government Solutions organization specifically to address the MAA requirements. Winstar's Chairman, Bill Rouhana, committed millions of dollars to the proposal development process based on the promise of business expressly represented by GSA in these MAA contracts.

V. The MAA Market Realities

Winstar is using and augmenting its existing broadband network to reach the MAA customers. However, unlike the regulated incumbent providers we compete against in the MAAs, Winstar does not have a multi-decade heritage or certain regulatory benefits to help finance the construction of our network. Instead, Winstar is funded privately by equity and debt markets. The capital required to build a new network is substantial and in order to compete effectively with incumbent providers, Winstar and other CLECs have had to raise and commit billions of dollars to the endeavor.

Over the last year, the investment community has dramatically reduced the capital available for financing network deployment within the telecom industry. These changes coupled with other market pressures surrounding our

debt structure made it necessary for Winstar to voluntarily file for protection under Chapter 11 of the bankruptcy code on April 18, 2001. Other CLECs have reached a similar point in their corporate history. Our business plan is to reorganize with a new debt structure, continue to provide services to our customers, and successfully emerge from Chapter 11. GSA and the Federal agencies are very important customers and continue to be a cornerstone of Winstar's long-run business plan. We appreciate the cooperation we have received from Sandy Bates, Margaret Binns, the GSA Central Office team, as well as the GSA Regions as we work though the Chapter 11 process. Their commitment to Winstar during this time in our corporate history confirms that we have not made an unwise decision in pursuing Government business.

Although we may be undergoing change as a business – and as an industry - the fact that Winstar has invested significant financial capital, time and resources, to win each contract, and to pursue the MAA business has not changed. The bottom line is we won the contracts and now we should be able to realize the fruits of that labor. Transitioning the business to the MAA contracts enables GSA, the agencies and the American taxpayers to capitalize on our labor by realizing the dramatic savings attainable through the MAAs.

VI. The Problem – Post Award Delays in Moving Business

Our concerns about the MAA program lie not in the program strategy; nor in the bid and proposal process; but instead with the myriad of post-award

confounding factors and the painfully slow speed of GSA's conversion from the existing service contracts to the MAA contracts.

We believe that the MAAs have been a tremendous success from the contract award perspective; however, very little of that success has been realized because the sizeable volume of business promised in those contracts - through extremely detailed eight-year forecasts - has yet to be implemented.

As of this hearing, Winstar has installed only 1.7% of the lines forecast as the business requirements by GSA for the first year in our twelve cities. Further, Winstar has only received orders for 5% of the promised lines, most in recent months. While we don't have overall results for our competitors, I think its safe to say that these are not statistics uniquely low to Winstar, but instead represent program-wide failures.

To give you some sense of the disparity between actual business transitioned to Winstar's MAA contracts and that forecast by GSA let me share a few simple statistics. The GSA's bid models, for Winstar's awarded cities, showed a line requirement, in year one alone, of more than 120,000 customer station lines. As of this date – about one year into our awarded contracts - we've received orders in 9 of our cities for a total of 7,933 lines. While order volumes have accelerated in recent months, this dribble of business is clearly not the bargain Winstar contemplated when it decided to pursue MAA business. Further, as we don't believe any of the other competitors have far exceeded our results, it appears that most of the promised MAA business remains on contracts with the incumbent RBOCs.

The Government's failure to make buying decisions and transition services in a timely manner is resulting in lost taxpayer savings. Moreover, the slow revenue flow under the MAA program post-award has had a significant impact on Winstar and will ultimately impact our ability and willingness to continue to participate in the program to the fullest extent. I imagine that others in this market may reach the same conclusions.

VII. Impediments to Transition

The main impediments we've experienced in transitioning MAA business include:

1. Administrative delays by the local GSA offices.
2. An inefficient, lengthy and biased Fair Consideration process in multiple-award cities.
3. Conflicts between existing in-place contracts with incumbent providers and the MAA contracts.

1. Administrative delays by the local GSA offices.

I'd like to give you a sense of the post-award sales and transition delays. The first hurdle following contract award is receiving a Notice to Proceed (NTP). Receipt of the NTP begins the period when we are able to "sell" through of the contract. The regional GSA offices release the Notice to Proceed to the contractors once pricing decisions regarding the GSA's Contract Management Fee have been determined and released. In 25% of Winstar's awarded cities, the number of business days between contract award and NTP exceeds 75

business days. The average number of business days between contract award and NTP in our 12 cities is 60. This is almost 3 months!

Another administrative impediment to transitioning MAA business is slow receipt of service orders. As discussed earlier, Winstar has received orders for service in 9 of our 12 cities. The average number of business days between the date that we received "notice to proceed" and our first order is 89 days. While some cities, like Baltimore placed their first order within 30 days, others – for example, Indianapolis has yet to place their first order with us and it has been 11 months since we have received Notice to Proceed. Once an order is received, a typical installation interval for new service is 30-45 days. So, in combination, all of the delays have resulted in the passage of an entire year in several of our markets before customers could take advantage of the MAA's reduced prices. While Indianapolis may be atypical of the overall program, the fact is the average number of business days between contract award and receipt of the first service order for 9 of the Winstar MAA cities is 148 days – more than 7 months! To make matters worse from a selling, general and administrative cost perspective, GSA expects its vendors to devote dedicated sales resources in each city. When it takes in excess of 6 months to close a single sale, one salesperson cannot make a living and it is economically impractical to commit a resource to such a market. This is the circumstance we face in many MAA markets. (Please refer to Attachment "MAA Process for Qualified Bidders" for additional detail.)

2. "Fair Consideration" Processes

The "Fair Consideration Process" is a misnomer. First of all, in this process, Winstar typically competes with the incumbent local provider. The incumbent RBOC has an inherent advantage in that a "transition" to their MAA contract is often simply an administrative or billing effort, not a physical one. This provides the incumbent with an inherent price advantage, in the form of a lower transition cost to deliver service.

Secondly, certain GSA Regions apply very rigid guidelines to how vendor price proposals are to be presented and then take weeks and even months to arrive at seemingly simple buying decisions. In some Fair Consideration requests, the local GSA office specifies that the technology that must be used, such as in-ground fiber. This is contrary to the contract as the specifications are supposed to be functional in nature (a specification for service requirements), and not define the *how* the vendors must implement the service.

The MAA contracts are all uniform in their product and service content. All MAA providers are presumed to be equal in terms of technical merit as pre-determined by GSA's intensive RQS process. By a rigid specification of the technology to be used, we are being removed from the evaluation, even before we have a chance to quote a price. The post-award buying decisions should be a simple matter of specifying a particular service or product requirement, receiving a letter response and making a decision. In far too many instances, this is not the case.

Finally, it appears that the Fair Consideration process does not always communicate the results of the competition to the losing bidders. In some cities,

our proposals are evaluated immediately and we are informed of the government's decision – win or lose. But in other cities, we have not yet been notified of the outcome of proposals that we submitted in November of 2000. So, either we've lost and don't know why or the GSA and Agency officials have taken more than eight (8) months to make a simple price comparison. Neither reason is acceptable.

While there is great latitude inherent in the Fair Consideration provisions of these contracts, failure to make decisions and to inform losing vendors of the outcome bears no relation to normal business dealings. If Winstar loses a Fair Consideration contest, we need to know so that we can respond more competitively in the future. The Fair Consideration process was intended to bring a business-like competitive buying process to the Government market post-award. Instead, we find it being used to delay decision-making, to conceal competitive outcomes and stymie post-award progress.

3. Conflicts with in-place contracts.

The "Fair Consideration" process is further confounded by an apparent conflict between the MAA contracts and existing incumbent contracts. In Dallas, for example, Winstar's MAA service price must offset a $25.00 termination charge that SBC charges GSA to disconnect its service under a pre-negotiated rate stabilization agreement. Winstar's Dallas MAA price is roughly $1.00 per line per month less than SBC's MAA price. However, because of the $25.00/line disconnect charge, GSA concludes that we are not a competitive choice since it

will take twenty-five months just to offset the RBOC's disconnect fee. It's interesting to see disconnect line charges being imposed by the RBOCs at the same time we find these same companies are agreeing to waive service initiation charges. Both practices destroy the level playing field envisioned for the MAA fair consideration process. To make matters even worse, we're told that the breakeven point has to occur within the current fiscal year. So, even if Winstar lowered its monthly line rate to $2.00 less than the competition, Winstar and other non-incumbent MAA providers will never "prove-in." This is an eight-year contract, yet decisions are made with short-term rationale.

This sort of impediment to winning business was not part of the business opportunity portrayed by GSA in the MAA bidding process. Issues like this are causing the Government and the American taxpayers to lose out on the $1 billion of savings. I think we all agree that this is not the government's desired end-result.

VIII. One Proposed Solution

To the best of our knowledge, across the twelve MAA contracts awarded to Winstar, less than 10% of the lines forecasted to be transitioned in the first year of the contracts have been addressed. As we have stated, the near term effect of the delay is millions of dollars in lost savings. What is the solution? What can be done to facilitate the transition and realize the promised savings? We have a few suggestions.

1. **Simplify the Fair Consideration process - Speed it up, communicate the results, track performance.**

Transition of business to the MAAs and Fair Consideration are processes that are extremely measurable. **A publicly accessible scorecard that begins with the baseline circuit forecasts represented to industry by GSA should be immediately implemented and tracked monthly**. The scorecard would simply show:

1) the percentage of forecast lines that have had orders placed with an MAA provider; and
2) the percentage of forecast lines that have been installed.

Such a scorecard would create a measurable standard for each MAA city, each GSA region and show actual attainment of the promised taxpayer savings. It would also serve to highlight cities that are "on target" and compare them to those who are not, hopefully spurring action, fixing process problems, and eliminating administrative delays. Hopefully, the scorecard would serve as an impetus for local GSA offices to simplify and speed up the process, and to communicate the results of the process monthly in a public document. (Please see Attachments: "MAA Transition Scorecard – Basic" and "MAA Transition Scorecard – Basic Plus" for suggested formats.)

2. Make the Fair Consideration process Fair.

To make the "fair consideration" process more fair, GSA could utilize the GSA IT fund to help defray initial one time transition costs to a non-incumbent's network as well as other external costs that bias the outcome in favor of the incumbent providers. This might include paying for the disconnect fee of the incumbent provider or replacing proprietary phone equipment that only works with the incumbent's service. GSA could also mandate a separate consideration for such factors so that the intended level playing field for MAA post-award competition could be realized.

In sum, GSA can act to remove any inherent bias in the process so that all MAA vendors have an equal opportunity to win the business.

3. Prove the government's commitment to its business forecast.

GSA's forecasts of their requirements in each city are the basis for the bargain. As the forecasts have not been met for the Phase 1 and 2 MAA cities, it will be difficult to achieve the same level of price competition for the Phase 3 cities. In other words, without a meaningful improvement in business transition in the awarded MAA cities, phase 1 and 2 performance suggest that there is little or no "reward" to equate to the vendor's risks. GSA received substantial MAA service price reductions based upon promised business. In the FTS2001 contracts, GSA used sizeable Minimum Revenue Guarantees to substantiate their commitment level. This may be a solution for the MAAs. Regardless, the

bottom line is that Winstar is prepared to deliver the aggressive and competitive rates promised in our proposals; now it is time for GSA to live up to the business promised in their forecasts.

IX. Conclusion

In conclusion, I would like to again congratulate GSA for their MAA initiative and for bringing competition to the local market. However, absent swift action, direct and substantial damage to this good work and the underlying purposes for promoting competition, as enshrined in the Telecommunications Act of 1996, will be done. Let us now work together to take advantage of the contracts and achieve taxpayer savings by simplifying decision making, communicating and tracking results, eliminating bias in the evaluation process, and quickly and efficiently transitioning the lines that were forecast.

Savings are not realized until the service is installed and the new, lower rates are applied to the agencies' phone lines. We believe that by supporting the recommendations made to improve the program- -including the immediate adoption and usage of the suggested scorecard- -the government stands not only to reap the benefits of lower MAA prices; but also to showcase the benefits attainable through real competition in the local service marketplace.

Thank you.

Proposed - Basic Version

MAA Transition Scorecard
July 2001

City	Lines Forecast by GSA	Line Orders Placed	Lines Installed
Albuquerque	4,001		
Atlanta	21,529		
Baltimore	7,104		
Boston	9,406		
Buffalo	1,806		
Boise	1,481		
Chicago	14,054		
Cincinnati	4,049		
Cleveland	3,598		
Dallas	14,708		
Denver	13,396		
Indianapolis	10,304		
Los Angeles	11,817		
Miami	6,028		
Minneapolis	2,548		
New York	23,276		
New Orleans	2,261		
Philadelphia	13,652		
San Francisco	6,001		
St Louis	6,718		

MAA Transition: How to Get the $1B+* in Taxpayer Savings

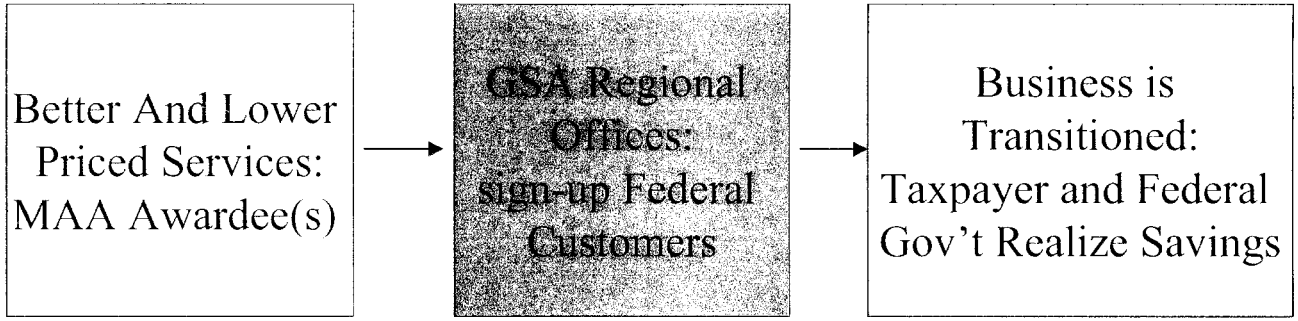

* GSA MAA Award Press Releases indicating Savings
http://www.fts.gsa.gov/news_room/press_releases/press.htm

MAA Process for Qualified Bidders

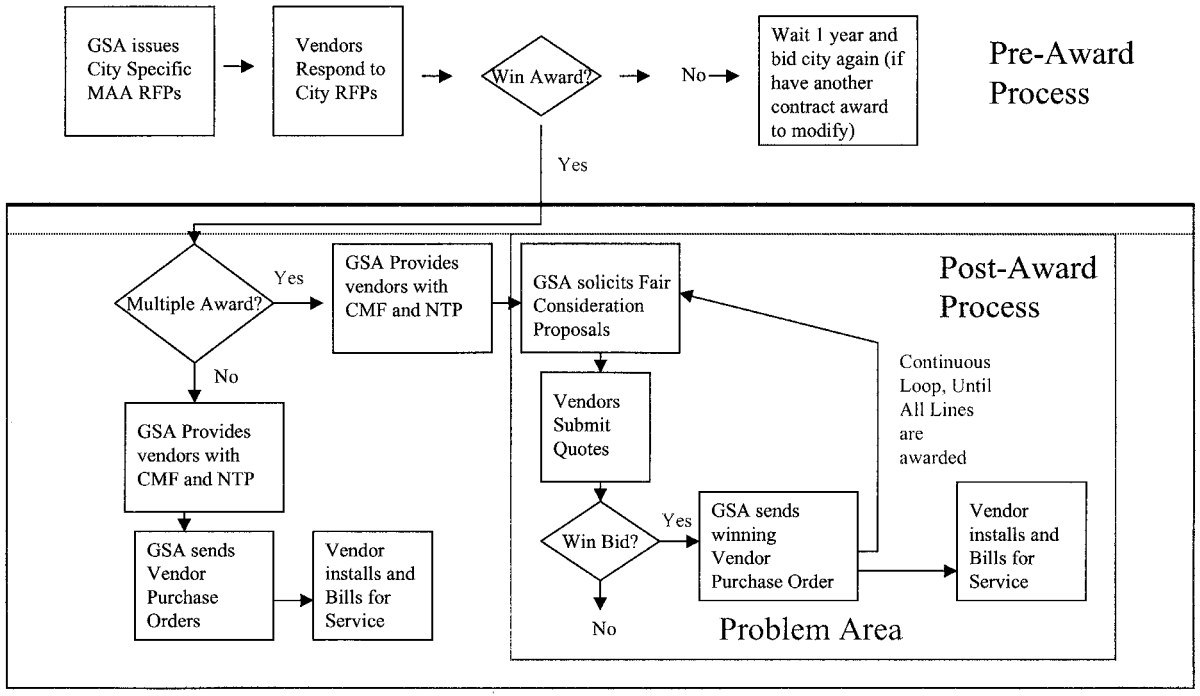

Mr. TOM DAVIS OF VIRGINIA. Mr. Page.

Mr. PAGE. My name is Dave Page. I am vice president responsible for BellSouth's business with the Federal Government. I represent a staff dedicated to ensuring our Federal customers receive the best technology available.

I have previously submitted my full statement to the subcommittee which I ask to be a part of the hearing record.

During my 32-year career at BellSouth and predecessors I have held various positions in sales and customer support. I am fortunate to have had the opportunity to see telecommunications become the most exciting industry in the world.

BellSouth is actively capitalizing on the changes in the industry to provide our customers with leading edge services. Building on the most sophisticated network infrastructure in the southeastern United States, our challenge is to maintain our perennial receipt of the industry's highest award for customer satisfaction, while simultaneously expanding our business into the global marketplace.

GSA's FTS Program and the MAAs are key opportunities for BellSouth to achieve this growth. BellSouth has won 3 MAA competitions—Atlanta, Miami and New Orleans. The 1-year forbearance period for the Atlanta and Miami contracts expired April 26, 2001. We look forward to being able to offer enhanced and emerging services such as frame relay, ATM, SONET and long distance. Unfortunately, there have only been limited opportunities to expand the contracts.

I have heard all the reason why we haven't been able to move forward and add new optional services. Some folks are concerned about commitments to FTS2001 contractors but is the government keeping its commitment to BellSouth and the millions of customers we serve.

It is not my intention to raise issues to which I have no solution, so I won't sit here and grumble about the transition and how it slowed my ability to implement services under my contracts. In many cases, there has been a lack of creativity. I recognize this may be caused by too few people in the field and not enough support from headquarters. It is our understanding that processing contract modifications to add new services might take a back seat to basic transition. I understand that priorities sometimes change and we all have to be flexible in the process.

Nevertheless, Mr. Chairman, BellSouth has been a good corporate citizen when dealing with all the stakeholders. We find we too have competing obligations for our people, our customers, our agencies and our shareholders. In the end, the approach to any problem that seems this complex is to get to the root and find a common solution.

I was reminded that industry, government and Congress had already solved the problem. The best solution to move us forward is to return to the guiding principles. These principles are maps that tell us how to proceed.

We aggressively lowered prices to win these MAAs. Our intent was to do more than just retain the business we have. It was an opportunity to expand into markets we won't enter and offer new and enhanced services. In fact, one of the primary reasons BellSouth bid on the MAAs was to be a partner with GSA moving

from a low price bid war style of competition to a best value partnership. This is not a merge. Partners should take my interests to heart and protect me from FTS2000 transition delays and difficulties. Partners should allow us to work together to facilitate meaningful discussions at all levels. Partners should be fulfilling their obligations to increase opportunity for competition rather than taking an opportunity my team develops and giving it to a competitor. Partners should live up to their commitments to all FTS program stakeholders.

To their customers, GSA owes the economic relief of the competitions that have already been conducted. The MAA should not subsidize GSA at the customer expense. To their contractor, GSA owes full, open, head to head competition. To the taxpayer, GSA owes more efficient government enabled by ruthless competition in the local and long distance services.

BellSouth appreciates this opportunity to share its views and welcomes any questions you may have.

[The prepared statement of Mr. Page follows:]

WRITTEN

TESTIMONY

OF

DAVID J. PAGE

VICE PRESIDENT

BELLSOUTH

BEFORE THE

SUBCOMMITTEE ON

TECHNOLOGY AND PROCUREMENT POLICY

U. S. HOUSE OF REPRESENTATIVES

June 13, 2001

I. Introduction

Mr. Chairman and Members of the Subcommittee, my name is Dave Page and I am the Vice President responsible for BellSouth's business with the Federal Government. I represent a staff dedicated to insuring our federal customers receive the best technology available. It is a privilege to have been asked to speak to you today and to present the views of BellSouth on this important government program.

A. David Page Background

During my 32-year career at Southern Bell, now known as BellSouth, I have held various positions in sales, customer support, and staff. I have been in and around the federal government marketplace for much of my long career, and I have had the opportunity to see this industry grow and change to become the most exciting industry in the world. Although the Federal Sales Organization was specifically established in July of 1988, to handle the unique requirements of the Federal Government customer, BellSouth has been serving the government for our 100-plus year history. My team delivers telecommunication products and services within the specific guidelines of Federal

Government regulations. Yet the measure of how well we do our jobs every day is your confidence that the communications services you expect are there when and where you need them, anywhere in the nine state BellSouth region. However, our vision does not stop there.

B. BellSouth's Role as a Government Service Provider

In the 17 years since BellSouth was formed, we have grown from a $9.5 billion business to a $23 billion communications company serving nearly 34 million customers in 19 countries. We provide local telecommunications, long distance access, wireless communications (including long distance), digital and data services, cable and digital TV, advertising and publishing, and Web hosting, Internet access, and other electronic commerce services to consumers, businesses of all sizes, to competitive telecommunications carriers and to the government. With one of the largest shareholder bases in America, BellSouth has assets of more than $39 billion. The corporation has our headquarters in Atlanta, Georgia, and employs some 88,000 men and women worldwide.

Since 1983, BellSouth has become one of the most widely held companies in the country. The BellSouth

network consists of more than 2.6 million fiber miles in more than 60,000 sheath miles of fiber-optic cable. Ninety-eight percent of interoffice circuits are transported on fiber. We have 9,000 SONET rings in service throughout our nine-state region. Ninety-nine percent of BellSouth lines are equipped for Signaling System 7 (SS7) capability.

In the Atlanta area alone, BellSouth has 100 central offices in the local calling area, 85% digital. BellSouth has over 300,000 miles of fiber optic cable, 73% buried or in conduit. In the Atlanta local calling area, BellSouth has over 2,700,000 access lines in service. In the outstate Georgia area there are 101 central offices and over 176,000 miles of fiber optic cable, 75% buried or in conduit and in over 1,300,000 access lines.

BellSouth is actively capitalizing on this changing environment allowing us to provide our customers with leading edge telecommunications services that include in-region long-distance (when allowed to do so), international, high-speed internet, ATM and frame-relay services. Building on the most sophisticated network infrastructure in the southeastern U.S., our challenge is

to maintain our perennial receipt of the industry's highest awards for customer satisfaction while simultaneously expanding our business into the global marketplace. GSA's FTS program and the MAAs are key components of BellSouth's ability to achieve our growth in these expanded areas.

C. A participant in the formation of post-FTS2000 acquisition strategies

We understand that customers do not buy technology – they buy solutions. We invest in powerful technologies and develop practical ways to apply them to solve our customers' business problems and help them realize opportunities for improvement. As participants from industry, we actively worked to develop the Guiding Principles for the post-FTS2000 program that now includes the MAAs. Our support was based upon an assumption that we, like the rest of industry, would be able to meet and exceed GSA's goals with a comprehensive solution through leading-edge technology, strategic partnering, and flexible, innovative, and cost effective pricing.

Since local transport is our core business, our initial goal in the MAA process was to become a qualified bidder and remain GSA's premier provider of local transport

service in the BellSouth nine-state region. And, because BellSouth operates under the highest code of ethics, we were confident of our full compliance with all government regulations. BellSouth believed that we would earn this premier status through committed account team support, project management, and implementation, and enhanced technical design and support.

The planned expansion of the BellSouth footprint in the Southeast region is an example of BellSouth executing a marketing strategy driven by increased customer demand. Becoming a qualified MAA bidder allowed BellSouth to incorporate innovation, network enhancements, and expansion into any MAA city in our nine-state territory.

BellSouth brings products to market to address the specific needs of customers like GSA FTS. To most customers, a good value does not mean just a competitive price. Value means getting the variety of practical services you need, without the hassle of dealing with many different suppliers. The wireline long distance market represents an opportunity for BellSouth to provide our customers with seamless telecommunications services.

D. Industries Expectations Heightened with passage of Clinger-Cohen and Telecommunications Act of 1996

The new environment that emerged after the passage of procurement reform legislation and the Telecommunications Act of 1996 under gird the development of the FTS Program. This environment is particularly exciting to BellSouth. We have embraced competition in the local loop and have aggressively submitted applications in our region to become competitive providers of long distance services. In addition, although our largest business revenues continue to come from local service, over $3 billion in fiscal 2000 came from the international sector.

As our chairman noted in the 2000 annual report to shareholders, "Established companies that are able to marry focus with funding, the Internet with infrastructure, and innovation with experience are the ones still standing strong. Bellsouth represents the best of both worlds." In short, BellSouth does not take change sitting down. In fact, BellSouth has experienced growth in data revenues at a compound annual growth rate above 31 percent over the last five years. This is in a market where pricing for data services has continued to decline. It is into this

highly competitive environment that we have hoped to participate in the FTS Program's MAA contracts.

II. The Guiding Principles of the FTS Program

The industry has experienced a wave of commercial competition in local services from interexchange carriers, competitive local exchange carriers, independent local exchange carriers, and even from other Regional Bell Operating Companies (RBOCs) competing outside of their respective regions. The diversity of providers is reflected in the array of contractors who have successfully bid and won MAA contracts. Each MAA competition proves the wisdom of the program structure and provides evidence of its continued philosophical vitality.

The FTS Program was designed to be a living program. Built upon a concept of having multiple, competitively awarded contracts that overlap in scope and duration, the design would achieve the twin goals of: 1. Ensuring the best service and price for the Government, and 2. Maximizing competition.

The program's depth was further achieved through the concept of having three discrete contract categories:

FTS2001, the MAAs, and the niche contracts. FTS2001 replaced the old FTS2000 but with broadened scope in terms of service offerings and customer base. Although initially these would be long distance contracts, depth would be achieved by opening them to include local services after one year of forebearance. The MAAs replaced the largely tariffed offerings for local service provided by RBOCs and others. After one year of forebearance, they would be welcomed into the long distance business. And, to target competition "where and when needed" niche contracts were established. This program design is a "triple threat" able to provide rolling competition without the dependency on mandatory use. Instead, the same market-driven competition that fuels the nation's economy would be applied in the government market.

BellSouth has been awarded contracts in three MAA competitions: Atlanta, Miami, and New Orleans. The one-year forebearance period for the Atlanta and Miami contracts expired April 26, 2001. We looked forward to being able to offer enhanced and emerging services including such as frame relay, ATM, DSL, web hosting, and, when allowed, long-distance services. Unfortunately, we,

like our MAA partners, have not been allowed to participate in this part of the program.

I have heard all of the reasons why we have not been able to compete in the move forward and add new services market. I understand that some folks are concerned about commitments to FTS2001 contractors. I recognize that some of GSA's inability to be as creative as they need to be is impacted by too few people in the field offices and not enough support from headquarters. BellSouth operates under the highest code of ethics, so GSA can be confident of BellSouth's full compliance with all government regulations. However, I have to ask myself whether the government is keeping its commitments to BellSouth and is compliant with the contracts it made with us.

The Southeastern U.S. is the fastest growing region of these United States. In spite of this unparalleled growth, or maybe because of it, BellSouth has moved to quickly upgrade and expand our ability to support customers across the region. Yet, as the growing population of this region requires more and more government services, we seem to be at loggerheads with a set of conflicting government obligations.

It is not my intention to raise issues for which I have no solution. So, I will not sit here today and grumble about how the FTS2001 transition has slowed my ability to implement services under my contracts. I recognize that some of GSA's inability to be as creative as they need to be is impacted by too few people in the field offices and not enough support from headquarters. It is our understanding that processing contract modifications to add new services might take a backseat to basic transition of services. I understand that priorities sometimes change and that we all have to be flexible in the process.

Nevertheless, Mr. Chairman, BellSouth has been a good corporate citizen when dealing with the all of our stakeholders. We too have competing obligations to our people, our customers, the agencies, and our shareholders. So, in the end, the approach to any problem that seems this complex is to get to its root and find some common ground for a solution.

III. Guiding Principles Are the Solution

I was reminded that the industry, government, and the Congress had already solved the problems we have

identified. The solutions that move us forward are the Guiding Principles. These principles are a map that tells us how to proceed. The rate of growth in this industry year over year is so high as to make any aggressive competitor see the massive opportunity to grow their business.

As such, we aggressively lowered prices to win these MAAs. Our intent was to do more than just to retain the business we have: it was an opportunity to expand into markets that we want to enter. In fact, one of the primary reasons BellSouth bid on the MAAs was to be a partner with GSA; moving from a "low price bid war" style of competition to a best-value partnership. This has not emerged.

Partners would have taken my interests to heart and fought to protect me from FTS2001 transition delays. Partners would have allowed us to work together to facilitate meaningful discussions at the regional and national levels. Partners would have worked to minimize transition difficulties. Partners would be fulfilling their obligations to increase opportunity for competition rather than taking opportunity that my team develops and

giving it to my competitor. Partners would live up to their commitments.

Are there regulatory issues to be overcome to deliver long-distance services within the BellSouth region? Absolutely. But nothing prevents us from bring forward the emerging services that are well within the purview of GSA to add immediately. In fact, the Guiding Principles anticipate that these overlapping contracts in terms of scope and term would provide rigorous competition in every sector. The MAAs should at least be the equal of FTS2001 from a service choice perspective even if only in the local service area. Although GSA has recently begun extending the competitive playing field to include competition among and between existing MAA and FTS2001 contractors, the pace for competitive introduction has been slow and the delivery of new services and features slow. GSA must expeditiously modify contracts.

Mr. Chairman, BellSouth's recommendations are straightforward and direct. GSA must become the partner that we courted. GSA must fulfill its commitments to all FTS Program stakeholders. To their customers, GSA owes the economic benefit of the competitions already conducted. As

it currently stands, agencies would spend less money, get better services, and realize greater flexibility by going out with their own procurements for MAA-like services. The MAAs should not subsidize GSA at customer expense.

To their contractors, GSA owes full, open, head-to-head competition. Competition must not be limited to specific cities or specific services. While it is important that GSA identify new areas that require targeted competition in the form of niche contracts, they must not overlook the need to add services, features, and technologies - including long distance - to the existing MAA contracts to meet the need of customers today. If BellSouth's data market is growing at a 31% compound annual growth rate overall, certainly that means that there is more than enough business in the interexchange portion of the market to enable the doors of competition in FTS2001 to be opened without jeopardizing any contract minimums.

To the taxpayer, GSA owes a more efficient government enabled by ruthless competition in local and long distance services. Competition yields more technological choice. Increased technological choice to the agencies makes them

able to fulfill their critical missions and serve the only constituency that really matters: the taxpayer.

Mr. Chairman, BellSouth appreciates this opportunity to share our views. We welcome any questions you may have.

Mr. TOM DAVIS OF VIRGINIA. Ms. Davis.

Mrs. JO ANN DAVIS OF VIRGINIA. Mr. Hogge, you stated in one city you waited 4 months before you got the notice to proceed and in Minneapolis it has been a year.

Mr. HOGGE. No. I talked about an average period of time from contract award to when we received a notice to proceed, kind of the administrative point in time when you are responsible for delivering contract deliverables and can start working business under the contract.

In Indianapolis, we won the contract on April 27, 2000; the notice to proceed came on July 11, roughly 2 3/12 months later. It is getting to that first order that has taken to this day.

Mrs. JO ANN DAVIS OF VIRGINIA. Your contracts when you bid was based on dollars for a year ago?

Mr. HOGGE. Right. What we did in assessing each of these contracts city by city, we looked at the forecast of business, where the buildings were, how they matched our developing network and bid based on that forecasted business which was very specific, year by year, by service, by product and represented that in a business evaluation that we assessed and decided to go forward with each bid.

Mrs. JO ANN DAVIS OF VIRGINIA. I would like to ask the same of each of you. Did you experience the same delay and cause you a loss in revenue?

Mr. DOHERTY. Yes. From an AT&T perspective, similar to Winstar, a robust business case was put together looking at the actual customers, the lines, the timing of the announcement of the award. In my testimony, we talked about untimely and inaccurate information. There is quite a bit of frustration if you are not the monopoly where you have all those infrastructures sunken costs in there for years. You have to plan when you are going to put infrastructure in to all your new customers and each of those delays delays not only implementing the capital expense but also the operational people you have in that city where you have targeted them to implement a program and they may be sitting around for 3, 4, 5 or 6 months waiting for the first order. There as been a large degree of frustration for AT&T.

Mr. PAYNE. I have the chart in front of me showing award dates and notice to proceed. Typically it has taken 3 months but in Boise, it took 7 months. You are not authorized to do any work until you have notice to proceed. In each case, we have hired staff ready to go, to move forward, so that is cost we have absorbed is for 7 months until you are allowed to work with the end users.

Mr. LUCAS. Of the three situations I describe in the testimony, there is still one that the wait time between the contract award and when we first got orders that was quite lengthy but we had to submit some interim proposals in that process as a part of the Fair Consideration Act. From the time we submitted the second round of proposals to the time we got the orders, it doesn't appear very lengthy at all.

Mr. PAGE. There is a very big difference between the two regions I support. Region 7 in New Orleans was a very rapid process and region 4, Atlanta and Miami it has been a longer process and seems to be some confusion in how they are supposed to notify you,

when they are supposed to notify you and there just seems to be some methods and procedures they are lacking there. I don't know that it has been 2 months though.

Mrs. JO ANN DAVIS OF VIRGINIA. Am I to get from most of you that the problem is the communications because it is a new program. I don't understand why two different regions would have such a significant difference. Do you get notification from the Washington office or the regional offices?

Mr. PAGE. It comes from the regional office.

Mrs. JO ANN DAVIS OF VIRGINIA. Same for all of you?

Mr. PAYNE. I want to emphasize something Winstar indicated. In Boise, it took 7 months to get the notice to proceed. We have not yet received the first orders. That was awarded in August 2000, last year. The point is there is a notice to proceed and then there is subsequent process and then you get the orders. So it isn't just the notice to proceed issue that is the delay. It is that interim between notice to proceed that the fair consideration process, which varies city by city, will determine when you get your first order. So you must first get your notice to proceed and then at some point there is a description separate from what was in the RFP, that region determines how they will define fair consideration.

Mrs. JO ANN DAVIS OF VIRGINIA. Do you think as a vendor you understand the definition of how they determine fair consideration?

Mr. PAYNE. Since it is not in the RFP, it is absolutely at the discretion of the local city.

Mrs. JO ANN DAVIS OF VIRGINIA. It is not in the RFP?

Mr. PAYNE. There is a reference to fair consideration but the process is not broken out, so each city takes their own definition of it. One of the reasons Minneapolis transitioned so quickly is they went to the notice to proceed and had a straightforward, fair consideration process. We went right into transition. As I sit here, we are 100 percent transitioned in Minneapolis.

Mr. TOM DAVIS OF VIRGINIA. Mr. Turner.

Mr. TURNER. I find this whole process, even though I know it is designed to be an improvement over past practices, quite confusing. I get the impression that the vendors find it quite frustrating. It seems you aggressively pursue trying to make a proposal and then you are told you have been awarded the contract and then it takes months for anything to ever happen with regard to what you thought you got.

Mr. Doherty, I am interested about the suggestion you made about moving to telecommunications services schedules. Explain to me exactly what that means and how that would differ from what we are currently doing. I also want to see if everyone on the panel agrees that would be a very positive change?

Mr. DOHERTY. It is our position that we believe all vendors should be able to market services to the agencies when and if they have the capability, whether it is local, long distance or end to end service. It is our belief these contracts with the forbearance periods which have not been met and a number of us have relied on these dates where they said you have a contract for a year and then you have a crossover, these programs are too hard to manage.

It is our position if you allowed industry to look at where you have a footprint—AT&T has capacity in 84 cities across the United

States—we could offer the GSA a schedule of services we offer to those agencies and they could be free to buy those services at will.

It would do two things. One, they would compare those services without any hidden fees with whatever is available to the market. Two, I don't think you would experience some of these lengthy delays mentioned here because the agencies would have all the information in front of them, I presume there would be multiple vendors who would enter services on that schedule and the process would be much quicker, therefore turning over savings to the agencies and taxpayers in a much quicker fashion.

Mr. TURNER. Does everyone agree that would be an improvement.

Mr. PAYNE. To go back to what we are supposed to achieve, it is best practices, best service and maximize competition. From a business perspective, you constantly look at your methods and procedures to make certain you are doing the right thing to achieve your goals. I believe the great frustration here is the process is not designed to evolve with the competitive process.

In the city I described, Boise, we are landlocked into how do we interpret fair consideration. I am looking for some uniformity. If you spend a year of delaying, we have heard $1 million a month. That is not a good use of anyone's time. Go back and revisit the process.

The overhead rate on schedules is 1 percent. Therefore the process is very expedited and off you go.

Mr. LUCAS. I don't disagree with the schedule being another alternative. I would have some mechanical issues with local services being provided on a schedule where every State is ruled by a different public service commission. I am not sure if we were going to mechanically create a schedule that could provide local services in 50 States what that price might look like once we take into consideration a balance across the country.

A schedule would certainly be an easier vehicle. We have a GSA schedule where we sell equipment and labor services. That works very good. From my view, that is another channel, just as MAA is another channel to the Federal customer. It becomes a channel conflict question as well. How many channels do you need to provide the same kind of service.

On the surface, the schedule would be a probably easier managed option but it would have some mechanical issues we would have to work through.

Mr. HOGGE. I would echo a good bit of Mr. Lucas' comments. Winstar also has a Federal supply schedule but we have a program that can work, we have a fair consideration process that is very loosely drafted, I think purposely so, and each GSA region has taken their own interpretation of how they implement that language. To us it should be a businesslike process. It is intended to be a process essentially of comparison shopping. These are nonmandatory contracts, in most cases multiple award, and you had a prequalification process through the RQS process that took some 2 years to complete, to evaluate all bidders on the basis of their technical and management capabilities.

After you have gotten the notice to proceed and are into a site by site or agency by agency specification of requirements, you lay

Winstar's proposal next to the other providers and make a decision. We view it as a process that is fixable but the FSS provides another means for doing it.

Mr. PAGE. I would like to echo some of what Mr. Lucas said and say it would be a different channel. I do not think the MAA is above being fixed. I think it would be a wonderful contractual platform for us to use. Ms. Bates said earlier that the difficulty on local service is trying to determine exactly what people need for today and into the future. That is not a cookie cutter kind of process where you order from column two and one from column three. If you really know what you need, you can do it off a schedule. I think the MAA can be more than that.

Mr. TURNER. Ms. Bates, do you have a comment regarding my question? What do you think about moving to a schedule?

Ms. BATES. First of all, I would like to indicate that in thinking about this, I think this is a very complex issue. I would say regarding schedules that it is easy to say but very difficult to do and requires some in-depth study.

The problems we have been addressing today in the large part would not go away with the schedules. There has been much discussion of fair consideration. Fair consideration is a key component to buying off the schedule, so that does not change.

In terms of implementation problems that we have spoken about today and the issues of plowing new ground in a deregulated market with many forces and contradictory definitions of success relative to business success, scheduled contracts do not change that. Those forces in the local market are there and are very dynamic, and are the byproduct of competition.

The complexities of today are the complexities of competition and not the good old days of a single choice, one could say.

The other area addresses the fees and I do not want my remarks to be construed in any way as defensive about a fee. We need to be mindful of our fee and that is what you hold us accountable for. I don't think we need to let the fact that FTS/GSA is fee for service obviate other issues. Many of the issues we are facing today and have been discussing this afternoon are here on the table ahead of us, fee or no fee. In the case of where a fee is 80 percent, it is $4, so I am not wanting to take attention from it but I don't think we ought to let it take our eye off the ball of some of the real hard issues we are facing.

Mrs. JO ANN DAVIS OF VIRGINIA [assuming Chair]. We will take a short recess to go vote and we will be right back.

[Recess.]

Mr. TOM DAVIS OF VIRGINIA [resuming Chair]. My first questions will be for AT&T.

We understand effective coordination with the incumbent local providers is a critical success factor in the implementation process. You mentioned that as one of the problem areas. What steps have you taken to obtain that cooperation and what additional steps does GSA need to take to ensure that coordination? What steps do we need?

Mr. DOHERTY. Let me say I agree with Ms. Bates and the testimony as far as we are working through the issues of the program. I understand that. I also understand depending on your comments

that the regulatory environment in different parts of the country and the issues are different.

However, I do believe that the accurate and timely information shared with the winning vendors as well as those vendors who competed for those services, particularly the ILECs and who have contracts, the time to work out how you are going to support the winning vendors is before those contracts are awarded.

For example, in New York the riser cable issue became a major delay for AT&T in working with Verizon in New York to move forward to get access to buildings. That is cable inside a building that takes you from floor to floor.

Mr. TOM DAVIS OF VIRGINIA. That is Verizon's cable?

Mr. DOHERTY. It was GSA's position it was their cable, Verizon went to the PUC and it sided with Verizon and said it is Verizon's cable. That was a lengthy process. We also were told to use several different tariffs, both the wholesale and retail tariff and all of that is very time consuming.

If some of those logistics had been worked out prior to the award, the implementation in New York would have been much quicker.

Mr. TOM DAVIS OF VIRGINIA. That is also in a State where Verizon has been able to go across lines, so you don't have the local issues you would in other areas in terms of local competition?

Mr. LUCAS. Yes. That was the first State we were granted long distance relief and one of the check marks of being able to do that is that we have adequate local competition.

Mr. TOM DAVIS OF VIRGINIA. Which should have incentivized you to get these guys in as fast as you could.

Mr. Lucas. We believe we have cooperated with all those that want to get into the local service business.

Mr. TOM DAVIS OF VIRGINIA. In New York.

Mr. LUCAS. In New York.

Mr. DOHERTY. In cooperation with GSA, we are writing a document to describe the roles and responsibilities of the agencies, the government, the vendors, vendors who may support the agencies and that has been incorporated into our contracts. I think that has been very helpful in streamlining who is supposed to do what and when.

When an agency orders something, what is it they are ordering and do they understand what they are ordering and what will be delivered by the program. Spreading that across all the MAA contracts for the different vendors would be helpful.

Mr. TOM DAVIS OF VIRGINIA. You are on both sides of this, Qwest is?

Mr. PAYNE. Yes, sir. We have talked about the management fee and I realize it is only a couple dollars here and there but it does frustrate the agencies. I want to be clear there has been specific guidance given to me here in Washington and to my representatives in the field. I have my program manager sitting here behind me and we were instructed not to discuss, not disclose the overhead rate.

I think many of us at this table have gone through multimillion dollar, billing system upgrades so that management fee can be embedded in a line cost and not broken out separately. In the FTS 2000 world, the contract ended in 1998. There was a line item so

every month you were reminded or you could see what the management fee was. I do think that frustrates some of the selling process.

I don't understand why we can't deal directly with the agencies. Some cities do allow it but three of the four will not. I heard one of the achievements in the first panel was moving from analog to digital. Many customers I am dealing with did that 15 years ago. I don't consider that progress. In Australia, it is against the law to sell something that is an analog interface.

When you talk directly to a customer, you are going to get the advanced technology and all the implementation advantages that come with it. Qwest is very anxious to bring DSL——

Mr. TOM DAVIS OF VIRGINIA. What happens in the translation?

Mr. PAYNE. If you went down this line, when someone is carrying the water for you, someone is interpreting what your selling proposition, I think it is a much better deal to say are you aware of hosting opportunities Qwest has in this area, are you aware of the DSL product, so the end user agency is starting to design their solutions to leap frog right into advanced technology.

Mr. TOM DAVIS OF VIRGINIA. It expands their whole universe.

Mr. PAYNE. Absolutely. That kind of dialog I witness everyday. It has been mentioned that the agencies in many cases want to use tools to make evaluations. My understanding is the minor tech pricing tools are not available and haven't been for months, so the agencies are out there without a mechanism to make those evaluations. The agencies are caught without a tool to make the evaluation. I am not clear why that is but that is what I understand.

My most important issue is in a business environment, I learned a long time ago nothing happens because you work hard. That is a nice thing but you have to have a schedule and manage to the schedule. At this hearing on April 26, we were told long distance services will be available by the end of the summer. I proposed a schedule. I am looking forward to September 22 providing long distance services under FTS2000 in one contract. That was the obligation I thought I heard. I am looking for a schedule of dates as we run most of our business there.

The field is very much voice centric. We need an education process. When we go out and talk about our solutions, we are finding the field doesn't have basic training, neither GSA nor the agency. We have to figure a way to bring them into the new century about how telecommunications works. It is hard to get into advanced technology without that.

Mr. TOM DAVIS OF VIRGINIA. You recommend that the MAA Program adopt the use of telecommunications service schedules and also reduce the GSA program administration fees and in turn a reduced role for GSA in managing the agency's telecommunications acquisitions.

Under that proposed scenario, how would those agencies that rely heavily on GSA today because they don't have the staff to plan and implement these services manage their requirements? How would you envision the roles of GSA, the contractors, the customer agencies would be redefined?

Mr. DOHERTY. I think one of the things our position supports is the fact we can't live in how we used to do things. If we are truly going to open up and are committed to bringing local competition

throughout the United States to all the agencies, we have to look at doing things differently than we did in the past. If you currently look at the way the schedule exists for GSA for agencies to buy services, it is take all or nothing. There isn't a way you can say what I really need is technical information on this particular item and that is what you pay, kind of a fee for service type thing.

I would encourage the GSA to look at different approaches to support the agencies in making buying decisions. I completely support the testimony of Ms. Bates earlier about a number of technical folks have left the agencies and a number of them do rely on GSA. We believe there could be a different proposition on how they are supported instead of having a fee that supports all that.

Mr. TOM DAVIS OF VIRGINIA. There was a recent Federal Computer Week story that noted the Gov Works Program at the Minerals Management Service is exploring the establishment of a telecommunications services schedule to sell to Federal agencies. Is that a good idea? Would you support that?

Mr. DOHERTY. We would absolutely support that.

Mr. PAYNE. Let me add, I think competition always enhances choices and better prices. I think it should certainly have an effect on these programs.

The critical difference is the GSA schedule does not allow any services that compete with the FTS services. There is a restriction of competition on the schedule side. I assume Interior is not going to take that approach. That will open an array of competition against FTS2000.

Mr. TOM DAVIS OF VIRGINIA. That could undermine FTS2001, their minimum guarantees and everything else?

Mr. PAYNE. It will encourage the prices to fall. The minimum revenue guarantee is a separate set of problems and I don't think it is related to prices.

Mr. TOM DAVIS OF VIRGINIA. That is not the Minerals Management Service's problem?

Mr. PAYNE. That is correct.

Mr. LUCAS. We would have the same issue. A schedule is something a little easier to manage but the mechanics of having a schedule that would be able to provide local services in all 50 States would be mechanically a challenge because we would have to make sure we met all the needs of the 50 individual public service commissions. It is a regulatory issue for us as far as the way Verizon looks at it. It is a different proposition for the end user agencies. There is a value add in the GSA's program on the GSA side that would be a distinction with the schedule approach.

Mr. PAGE. I don't disagree. It is a good additional channel for people to use but I have to emphasize what Mr. Lucas said, the regulatory battles you would have to run to try to come up with a 50 State price for something would be enormous.

Mr. TOM DAVIS OF VIRGINIA. Although it has only been exercised in one instance to date, it is my understanding the MAA contracts do have a direct order, direct billing option that would seem to promote the kind of direct customer, provider interface relationship you find missing. Have you looked at that and does it meet your needs?

Mr. PAYNE. Indeed we are aware of that. The delta between the direct bill versus full service—in Denver the full service fee is 44 percent management fee, the direct bill is 39 percent. That is still pretty hefty overhead. We are not allowed at this stage in any of these four cities, the agencies are not allowed to come to us directly. That has to be separately authorized so we have not had an agency to select the direct approach. All of my agencies are at the full service level.

Mr. TOM DAVIS OF VIRGINIA. Would it be helpful to a speedy transition if there was an Interagency Management Council for the MAA Program as we have for the long distance component of FTS2001?

Mr. DOHERTY. Yes. I think anytime you can sit down and talk with all the principals, you are likely to get faster results. We all have our different motivations and different agendas but we also share the same sizable number of problems. Getting everyone's opinion on the table and talking through it is the fastest way as opposed to sending letters back and forth and GSA being in the position of having to filter everyone's differences.

Mr. TOM DAVIS OF VIRGINIA. You identified the slow pace of orders as a factor in the transition delays noting to date you have received orders for only 5 percent of the identified lines. What steps have you taken by yourself or with GSA to try to facilitate contract marketing and service ordering processes?

Mr. HOGGE. Like all the other MAA winners, you start out with an initial event, kick off the city, get things going and try to work through the regional GSA office assigned to managing that specific MAA market to get out awareness, get customer interest and to start motivating the service order process.

We have been actively doing that, we have been actively working with Sandy and Margaret who have instituted periodic meetings with each region to assess and track performance.

In our testimony we suggest shining the light of day on where we are with respect to those forecasts. You get visibility on something and results tend to follow. We know with great detail what the GSA felt the requirements would be by city, by product by year. That is what we stepped up to the plate for and that is what we would like to see tracked. Whether it comes to Winstar or not, we know where we stand with respect to the fair consideration process in the multiaward cities as well as the single award cities like Baltimore and Cincinnati.

Mr. TOM DAVIS OF VIRGINIA. I understand agencies didn't budget for one-time transition related costs such as termination fees. Given GSA did not collect funds from the agencies in advance to fund these one-time charges, what should we do now to address the issue?

Mr. HOGGE. As I suggested, perhaps the IT fund could be used to defray those one-time costs as well as taking a longer view of things. I understand how agencies do their fiscal year budgeting but Winstar has a built-in value proposition in the fixed 8 year pricing we proposed to take a life cycle view of things, to adjust the fair consideration process, to remove any kind of external factors that otherwise bias the decision toward the incumbent. Any combination of those could be used to remedy a situation.

Mr. DOHERTY. It is my understanding that prior to going into the MAA Program, GSA had somewhere around 22 to 24 percent of the agencies used GSA for local services. I think GSA needs to take a much longer view of what would happen to the overheads if that was driven to the 55, 60, 65 percent capturing market share and instead of having some of these rates we have heard, from 23 to 84 percent, to lower those and take some of those fees and let the vendors use that as a short term service initiation charge. Increase our fees, that money goes to the vendors, the vendors now would take care of upfront capital costs and over a period of time, that would go away.

If GSA looked at a model, I think those fees could be used in some type of transition fund.

Mr. TOM DAVIS OF VIRGINIA. Mr. Page, you talked about the importance of niche contracting as a component of the overall FTS2001 strategy. It appears that concept really isn't being utilized by GSA. Would you agree, and if you do, what can be done to improve that utilization?

Mr. PAGE. The only what I would call niche contract—a trilogy of contracts, FTS, MAA and the niche contract—all should be able to intermingle and compete with each other as we proceed—the only one I am aware of is the DSL contract recently awarded nationwide. I would consider that a niche contract for GSA. I don't know of any others.

Mr. TOM DAVIS OF VIRGINIA. As far as you see, they are not utilizing it to the extent they could?

Mr. PAGE. It is underutilized I would think.

Mr. TOM DAVIS OF VIRGINIA. Have you had any difficulty marketing to customer agencies?

Mr. PAGE. I have two extremes. In New Orleans where I am the sole provider, I have a relationship with GSA in region 7 where we developed a marketing plan, we are actively going after customers not presently GSA customers and doing it in a uniform manner. We have worked with Margaret and her people to get some attractive, one-time looks at the market. That is a different world than my region 4 marketplace. I am having a very difficult time marketing in region 4. GSA wants to be between me and the customer.

Mr. TOM DAVIS OF VIRGINIA. Ms. Davis.

Mrs. JO ANN DAVIS OF VIRGINIA. I believe Mr. Payne you stated you were forced to work with GSA rather than going directly to the Federal agencies.

Mr. PAYNE. I think we all said it.

Mrs. JO ANN DAVIS OF VIRGINIA. I thought I heard the first panel that the agencies had a choice, either work directly with the vendor or go through GSA. What is your understanding?

Mr. PAYNE. It varies from city to city. We have instructions to work through GSA. The pricing is done through GSA. We are not allowed to tell the end user what our bid price is, it has to have the overhead rate. One way they can control that is if the overhead rate is applied to the proposal responses coming out of the GSA. We are not in the position in some cases to know that.

We should be with the agencies making their plans. At Treasury, we sat down with them with their 5 year plan, we know where they are going, we look at where the technology is taking us and

them, make our plans accordingly and we are there when we need to be there with that new technology as it evolves in whatever prescribed direction. We will probably never go through an intermediary even though we are a sub to a contract. TRW has realized the best value is bring the two together, stand by and see what happens. That is always the best proposition, bring them to our facilities in Sterling to see our "cybercenter," or to Minneapolis to see our managed care environment. It is a learning process. Our presentations are learning tools.

Mrs. JO ANN DAVIS OF VIRGINIA. Do you think it would have sped up the process which has dragged out for over a year in some cases?

Mr. PAYNE. Yes. I think some of the solutions you can skip some of the intermediate technology and directly to the more advanced technology when you see the cost break points. Those are the tools we should be working, how do we proceed here.

Mrs. JO ANN DAVIS OF VIRGINIA. Do you all agree?

Mr. DOHERTY. I think the broader issue is GSA should run this program as the public or private sector would run the program. I think there clearly is a role for the GSA in supporting the agencies, in helping them buy telecommunications services.

The question is should the GSA have a marketing role? Our position is that is not a role for the GSA. The GSA should get contracts out there, get pricing in place, get policies in place and then let the marketplace rule, let the different vendors go out and market directly to the agencies, let the agencies make informed decisions and hold the vendor community responsible for the things they have said and commitments they have made. I don't think GSA needs to be in a role to get between the end user agencies and industry trying to provide services.

Mr. LUCAS. If I may offer a dissenting opinion. GSA is a distribution channel as far as we view the world and the MAA contract is one mechanism. To the extent GSA can market that value added to those agencies where they don't have the staff to do their own telecommunications planning and implementation, GSA provides the value. That is something I am willing to market through.

GSA is also not mandatory, so if there appears to be some difficulty in a particular city or State where it doesn't look like GSA is a solution, there are other alternatives that we have to market directly to those customers.

In the communications I have with GSA there is an understanding we can work together to where we are both successful and where we can't agree, there are other options.

Mr. HOGGE. I agree. There clearly is a value add. The GSA provides services to agencies that would not be equipped to respond to a bombardment of proposals from Qwest, AT&T, Winstar and the incumbent provider but other agencies are more sophisticated. I think there is a solution along the spectrum depending upon particular situations. That is the difference here on the local contracts versus the long distance contracts. Local service is inherently local, the agencies have specific needs at a specific site.

We are open to working through GSA. It is a viable channel. That is why we pursued the program in the first place. To the ex-

tent there are agencies equipped to deal with the industry coming directly to them, there is clearly a subclass for those opportunities.

Mr. PAGE. I personally think we could do both. Where I go out and develop a prospect and need and go through some elaborate design work, where that customer or agency has no procurement vehicle readily available to utilize, the MAA should be a platform I can bring that customer to and we can establish that process and because I have done the marketing, done some of the upfront work, then GSA might be able to negotiate with that customer on fees because there is less they have had to do.

Clearly there is a need for GSA to be a marketing channel also. I see it as being more than just a two fee process where one fee is direct and one if GSA is involved. I think GSA is smart enough and savvy enough to figure out a way to have a sliding scale that allows for both. If I go out and kill it, I want to be able to eat it. You end up not having that desire to bring that in unless you know you can partake.

Mr. TOM DAVIS OF VIRGINIA. You mentioned the MAA contracts are uniform in their product and service content, GSA's implementation and administration is not. Are there specific contract administration practices that ought to be made uniform?

Mr. HOGGE. I think there are administrative processes that should be made more simple and more straightforward. Fair consideration is the one we have chosen to focus on. Winstar began as a company focused on providing local broadband services to small and mid-sized businesses.

When we decided to pursue government business through the MAA Program, you have about a 24 month period where there is a lot of expense and zero revenue. That was the RQS process. Then there is an additional period of time where you go through city by city competition and there is expense and zero revenue until you get to the point where you have a contract vehicle in place, a requirement in this market, it seems to me after that point you then get into more of a normal sort of business blocking and tackling, head to head competition for this business. That is where we think our recommendations about fair consideration can turn the post-award buying process into a more businesslike transaction.

Mr. TOM DAVIS OF VIRGINIA. In your collective experience, if agencies have to provision for additional equipment in order to transition, do they know the options available to them such as buying from the Federal Supply Service Schedule?

Mr. PAYNE. The sales process is actually one about training technically and giving the agency the contractual alternatives. We all know the rules and are very much aware of the vehicles and alternatives, and are aware in some instances an upgrade is required or necessary or maybe advantageous, so when you sit down with that agency directly, you start looking at that longer term vision, making those plans, then start realizing their capital investments and requirements. You can bring to the table some creative alternatives. That is part of the selling process.

None of this is charged. This is inherent in what you do when you sell so some call it planning, some call it selling but basically the agency is getting the benefit of a consultant who comes in and

will provide alternatives. Part of that is looking at the alternative contract vehicles.

My concern is the agencies are making decisions not knowing what those alternatives are and not knowing what the costs are and we go out to deploy it and they are surprised because we didn't present the solution that there is more equipment necessary or more upgrades or riser cable.

Mr. TOM DAVIS OF VIRGINIA. Ms. Bates, do you want to say anything? We will talk to you informally when this is over. I don't want this to go unrebutted if you want to say anything.

Ms. BATES. I don't intend to rebut because it is too late in the day. I think on a positive note, I appreciate the fact we have come here today and I have heard and you have asked questions of this panel on ways GSA/FTS can improve. I think anytime we can all come together and talk about ways to improve it is positive.

I would ask each of the panel members while they have spent much time thinking of ways we can improve, and we will look at that, they also need to think about how they can improve this process because we are in it together. If only one of us implements all the improvements, this many-legged stool will still fall over. I think we all need to take that to heart.

I also think we have talked about many things that have different meanings. The big thing is communications. We have all identified that as an area of complexity that we need to do better. I think the testimony, questions and answers really elevate that to a new level.

We have spoken of fees, marketing, many things where apples and oranges have been thrown into this fruit basket. It is a very complex issue and while we always choose to take the high road in trying to explain it, many times the devil lives in the details and we have to get down there to make sure we are comparing apples to apples.

I will commit to work hard with GAO over the next several months as they complete the study you have requested to make sure as we make recommendations and discuss very important issues of this program and the FTS2001, we are making an apples to apples comparison so we can all come out with a common understanding. We have a long way to go to get there.

We did talk about alternate contracting methods. While we need to look at that, I think we need to be aware the contract vehicles are not so much the problem but we are dealing in a deregulated market now where competition is new to many of our customers, ourselves and our industry and we cannot deny that we need competition along the way. That is threaded throughout in our discussion somewhat mixed of fair consideration.

I intend to push ahead. I think we have a good program in place and everybody here has said they are committed to a rapid implementation of the current program, bringing on new customers, getting new customers over and getting that savings to the taxpayer. I believe I can speak for everyone here, we all intend to push ahead and do that.

I appreciate the opportunity.

Mr. TOM DAVIS OF VIRGINIA. Thank you.

Ms. Davis.

Mrs. JO ANN DAVIS OF VIRGINIA. You are right, Ms. Bates, the devil is in the details. It sounded like the hearing today and all the testimony that communication is the answer to making this program work. I think it involves not only GSA here in Washington and all your regional offices as well as each of the vendors. I think if everyone could work on the communication, we can make a good program out of this.

Thank you all for coming.

Mr. TOM DAVIS OF VIRGINIA. I want to take a moment to thank everyone for attending the subcommittee's important oversight hearing. Thanks to all the witnesses, Congressman Turner and other members for participating, thank my staff for organizing this and I think it has been productive.

Ms. Bates, this is a tremendous complex procurement on the cutting edge of new technologies. I understand how difficult this is even for the most seasoned private sector entrepreneurs who are going under every day in some cases. You have some very solid ones here that we will see through this contract and I think the spirit with which you have approached this is very encouraging.

As long as we can keep talking to each other, try to learn from it and improve it as we move on, at the end of the day our goal is to give the taxpayers their best bang for the buck and for the agencies to allow them to operate most efficiently.

I applaud the way you have approached this and working with us. We obviously have a way to go but we want to be there with you. I think the hearings help everyone to understand we are going to oversee these things. It allows everyone to utilize what they have to get together.

To all the vendors, we want this to work for you as well.

I am going to enter in the record the briefing memo distributed to subcommittee members.

We will hold open the record for 2 weeks from this date for those who may want to forward submissions for possible inclusion or if there is some thought you want to get into the record before we proceed. You would be most welcome to do that.

I am going to close the proceedings. Thank you.

[Whereupon, at 4:48 p.m., the subcommittee was adjourned, to reconvene at the call of the Chair.]

[Additional information submitted for the hearing record follows:]

International
Telecommunications

25 June 2001

The Honorable Tom Davis
House Committee on Government Reform
Subcommittee on Technology and Procurement Policy
2157 Rayburn House Office Building
Washington, DC 20515-6143

Re: Request that this Statement be added to the Record of the 13 June MAA Hearing.

Dear Chairman Davis:

I attended the 13 June MAA hearing, as I attended the 26 April FTS2001 hearing, and I was again pleased to note the Committee's concern for meaningful competition in the Federal telecommunications marketplace. I am the president of a small telecommunications business that has found it increasingly difficult to participate in the Federal market because of omnibus, multi-billion dollar, bundled contracts. These contracts, such as FTS 2001 and the MAA's, have redefined the market as one in which only the largest telecommunications companies can participate.

I find it distressing that the current debate is largely focused on whether and when multi-billion dollar FTS2001 and MAA awardees can "cross-over" and participate in each other's local and long distance markets. I believe that one of the 1996 Telecommunications Act's principal goals was to foster a broad range of competition. That goal is severely distorted and subverted when competition is limited to the largest companies in the industry. As you suggested in your opening remarks to the FTS2001 hearing, a GSA Telecommunications Supply Schedule would be an excellent mechanism for opening the Federal market to **all** potential participants. This would not only spur the industry growth, but also provide the Government with the opportunity to receive the best possible pricing, service, and technological innovation.

I also found it a matter of great concern that GSA did not appear to be forthcoming in its response to user agency and GAO requests that it identify its management fee components of the MAA (and FTS2001) service charges. Without that information, Federal agencies are not able to identify the actual costs for telecommunications services. Furthermore, those companies, such as Electra, that seek to compete in the Federal market, (e.g., through a GSA Schedule), will be unable to develop competitive pricing without a breakout of the MAA and FTS2001 GSA fees. I think it is also important to note that GSA's well-documented marketing effort on behalf of its MAA and FTS2001 vendors is an additional hurdle to an open, competitive marketplace.

4905 Del Ray Avenue, Suite 212, Bethesda, MD 20814
www.etelepower.net 301-913-0474 301-913-5984 (fax)

I reiterate the conclusion to my 14 May statement: Electra is only seeking the opportunity to compete, on an equal basis, with all other Federal telecommunications suppliers. I believe that this will occur when the Government pursues a procurement policy that embodies the goals of the Telecommunications Act of 1996.

Sincerely,

Craig Brooks
President

cc: Honorable Jim Turner

June 27, 2001

Mr. James Dechene
Subcommittee on Technology and Procurement Policy
Committee on Government Reform
United States House of Representatives

Mr. Dechene:

Enclosed please find the testimony of SBC Communications, Inc. which we are submitting for inclusion in the official hearing record of the June 13, 2001, Subcommittee hearing entitled: "Ensuring Program Goals Are Met: A Review Of The Metropolitan Area Acquisition Program."

Please call me at 202-326-8873 if you have any questions. Thank you.

Sincerely,

Roxanne L Scott

Roxanne L. Scott
Associate Director, Federal Relations
SBC Communications, Inc.

TESTIMONY OF SBC COMMUNICATIONS, INC.

ENSURING PROGRAM GOALS ARE MET: A REVIEW OF THE METROPOLITAN AREA ACQUISITION PROGRAM"

BEFORE THE
SUBCOMMITTEE ON TECHNOLOGY AND PROCUREMENT POLICY

COMMITTEE ON GOVERNMENT REFORM

U.S. HOUSE OF REPRESENTATIVES

JUNE 13, 2001

Mr. Chairman and Members of the Subcommittee, SBC Communications, Inc. welcomes the opportunity to respond as part of the official record regarding the Metropolitan Area Acquisition (MAA) program administered by the General Services Administration (GSA). SBC, through its affiliates Southwestern Bell, SBC Telecom, Ameritech, and Pacific Bell, is committed to providing to our customers complete and robust services for leading edge products, as well as around the clock support for these services. SBC continues to deploy and maintain a world class network that connects consumers, businesses and government agencies throughout the United States and around the world. Our entire workforce - more than 219,000 strong located in 25 states and 22 countries – is focused on working with customers to combine and customize data and e-business services to meet their individual needs and to deliver those services over one of the most advanced communications networks anywhere.

SBC is fortunate to have been awarded MAA contracts from the GSA for the following cities: Los Angeles, Cleveland, Dallas, St. Louis, Indianapolis and Boston. We are committed to these contracts awarded to us and to servicing the customers who utilize the MAA program. We have aggressively priced our services, and we have agreed to pricing formats that, in many cases, were created specifically for the GSA and the Federal agencies. We will continue to modify the MAAs at the request of the GSA. Additionally, these MAAs follow the Indefinite Delivery / Indefinite Quantity (ID/IQ) regulations, which relieve the agencies and the GSA from any kind of commitment, whether it be term of contract, quantities of services ordered or revenue. GSA has encouraged a ruthless competition among the MAA contract holders to achieve promised savings of

$1.1 billion to the Federal government through agencies' use of the MAA program. In her testimony today, Ms. Sandra Bates, Commissioner of Federal Technology Services, GSA, qualified her estimate of savings to end-users by saying it "is very difficult to compute." An accurate and detailed accounting of the program is necessary in order to determine whether the American taxpayers are receiving adequate benefits from the MAA program. Even through cursory analysis, current savings as stated by Ms. Bates ($4 million per month for 96 months) will not come close to the $1 billion plus savings that has been anticipated. Further, it is not clear whether the savings calculation includes the MAA acquisition costs and transition costs.

Following review of the testimony before this Subcommittee today, SBC believes it is necessary to offer a correction to the record. Ms. Bates indicated that the Washington Interagency Telecommunications Services (WITS) contract was a Phase II MAA competition. However, WITS was a separate contract vehicle not included in the MAA program. This correction can be easily verified through a review of the awarded MAA cities at http://hydra.gsa.gov/maa/awardees.htm. Ms. Bates relies heavily on the WITS2001 program in her analysis of the effectiveness of the MAA program to date. Unlike the MAAs, the WITS2001 contract was a separate, sole-source contract that was awarded to the incumbent provider. This contract does not parallel the MAAs and of course transition issues would be fewer in such a scenario. In addition, Ms. Bates' testimony indicates that of the $4 million savings per month, more than 90% or $3.7 million comes from the WITS2001 contract, which leaves just $300,000 per month for the actual MAAs. We offer this example to provide a context for the comments that

follow. In our comments, we demonstrate how the MAA program has been an opportunity missed. We offer recommendations to re-energize and re-ignite the partnership with industry envisioned at the inception of the MAA program.

SBC, like any company in the private sector, owes value not only to its customers but to its shareholders as well. We find ourselves increasingly at odds with the GSA when attempting to deliver services to our customers, while at the same time maintaining the rigid and often counter-productive contract stipulations placed upon us by the MAAs. One of our deepest concerns lies within the Fair Consideration process and the way in which the GSA applies this process for all MAA contracts. The Government is taking liberties or exceptions to the rules, many of which are technically inconsistent with the MAA contract. The most egregious of these liberties is the clear intent to request (new or re-) pricing for each service order. We call your attention to the following language (from G.2 MAA requirement):

> *The Government does not intend to advise the contractors of every order to be placed or provide the contractors a separate opportunity to compete for each order.*

It seems clear that the Government's invocation of the Fair Consideration process for every service order (method "two" as described in Ms. Bates' testimony) is counter to the intent it described in the contract for each and every service order. Why is this important? The Government implied that costs for responding to these numerous requests (facility studies, staffing, marketing time, etc) were not needed in contractor proposals.

We contend that Incumbent Local Exchange Carriers (ILECs) are adversely harmed by this practice because we are regulated in our pricing flexibility. The problem only worsens as other offerors potentially enter the fray via the Forbearance Clause - not just due to a net increase in competitors but also due to the lenient rules (removal of geographic scope requirements, removal of full product set requirements, more lenient pricing considerations) a Forbearance competitor is afforded. Further, it is our experience that there is a lack of uniformity and consistency when applying Fair Consideration by the GSA. Not all pricing elements have been included in the Government's buying decisions.

Fair Consideration as well as implementation issues are magnified by the fact that, since MAAs are administered regionally by the local GSA office, they are subject to interpretation and they become ambiguous not just to the vendor but to the customer of record as well. We have found ourselves in a position where local GSA representatives are agreeable to a proposal that they see as in their best interest, only to be countermanded by the Washington office. On other occasions we have had to act as an arbitrator between the Washington and local office. This communication friction is made worse when you consider the other stakeholder – the end user agency. With four interested parties, the Washington GSA office, the local GSA office, the contractor and the end user agency, each with its own priorities, it should come as no surprise that communication is often slow and fraught with misunderstandings. Further, we have seen a trend whereby, the MAA awards have been solely predicated on price with value-add to

the customer assuming a backseat as vendors become obligated to reduce prices to the point where cost recovery has become an issue and the MAA model becomes contentious to support.

We believe that fundamentally, the GSA currently is failing to leverage its buying power. We site the following four examples:

First, the Government's Minimum Revenue Guarantees (MRG) are trivial. In its testimony today, the GSA acknowledged that, "Local service is by its very nature a labor-intensive operation whether managed by FTS, a federal agency, or a large private business. Local services involve the myriad physical cables and wires that connect the individual subscribers' telephones and computers to a telephone company's central office, then to the public switched network. The churn of daily office activities directly affects management of local service: office moves, new employees, changes in individual responsibilities, promotions and retirements, etc. Any and all of these activities can result in rewiring, telephone number moves and changes, establishment or discontinuation of service, ordering or canceling features, and other significant changes." Yet, the GSA has failed to match these intense requirements with a reasonable MRG. A significant MRG would help defray the costs of non-standard administrative requirements.

Secondly, by releasing an ID/IQ contract, the Government once again failed to provide offerors with meaningful commitments and projections upon which to base lower prices. The impact of non-substantive MRGs is compounded when coupled with an ID/IQ procurement in which the Government fails to commit to purchase even one line and also

retains the right to cancel service at any time (in the extreme, the agency could disconnect after but one month of service). This is clearly not a model that leverages the Government's buying power.

The third way the Government failed to leverage its cumulative buying power was its invocation of the Fair Consideration process for each and every service order. This has the net effect of requiring suppliers to "hide" or "save" the lowest possible price in anticipation of offering lower prices in the future to secure business at a particular location.

Fourth, the MAA contains unreasonable forbearance methods in which MAA or FTS awardees can enter an MAA city and opt to serve only a particular address without serving the entirety of the MAA city (per the requirements of the original solicitation). This exacerbates the problems raised in Example #2 above. This "cherry-picking" process puts post award pressure on the prices, which forces offerors to withhold the best price in anticipation of a future price war.

As if these issues were not enough, the Contract Management Fee (CMF), which GSA places on the MAAs for their cost to maintain and administer these contracts, ranges from 22% to 84%. This percentage has, on occasion, pushed the effective rate above tariff pricing to end-users. Although Ms. Bates testified that the CMF is known by all stakeholders, we are specifically prohibited from showing this fee in our bills, and all our marketing efforts are to be priced at the Government's marked up rate. More often than

not, the customer is not aware of the CMF. When they are aware of this fee, they usually are not aware of the percentage. In areas where the agency deals directly with the vendor, a substantial CMF is still applied. Our recommendation is that the CMF be disclosed on the bill to allow all users to make informed buying decisions. This recommendation would also lower the substantial support system expenses imposed by the MAA billing requirements.

In regards to the testimony of Winstar concerning the Dallas MAA and the termination fees faced by agencies transitioning from SBC to another service provider such as Winstar, SBC would like to make the following comments. It is common practice for Local Exchange Carriers to enter into a term contract with a customer for local access and seek relief for early termination of said contract due to the fact that discounts were applied through the term of the contract and that the LEC will never recover up-front cost for delivery of services. We agree with Winstar that the GSA did not inform potential customers that termination charges would be additional to MAA contract rates.

We offer these comments to assist the GSA. The MAA program as defined by the Guiding Principles could be an excellent tool for industry, the GSA, and the end user agencies. It does offer a contract vehicle through which agencies can buy. However, the MAA program, as currently established, imposes too many requirements that do not add value to the end user community. Our comments are reflective of our experiences to date with the program. Ours is a story of opportunities missed. SBC holds more MAA contracts than any other ILEC. We have a vested interest in seeing the program succeed.

Unfortunately, many issues have caused prices to increase and have caused the partnership with the GSA to become contradictory. The Federal Acquisition Regulations have contemplated the benefits of procuring Commercial Off the Shelf (COTS). This permits the Government to shorten its procurement cycle while lowering costs. We believe the MAA parallels this analogy. If the GSA did not require non-standard (that is non-COTS) service ordering and billing, then price savings could be passed on to the end users and implementation cycles could be reduced.

Mr. Chairman and Members of the Subcommittee, it is our hope that your hearings will positively impact the MAA program by encouraging more open communication between the GSA and the vendors as well as an alignment of program requirements in consonance with the guiding principal of a Partnership with Industry. As stated in Ms. Bates testimony "the MAAs were developed to ensure the best service and price to the Government and to maximize competition." The contract requirements need to be evaluated and modified with the intent of accelerating transition and achieving the program goals. SBC remains committed to the program and looks forward to working in partnership with the GSA and with your committee to improve the program for the benefit of all.

U.S. Department of Justice
Office of Legislative Affairs

Office of the Assistant Attorney General

Washington, D.C. 20530

July 23, 2001

The Honorable Tom Davis
Chairman, Subcommittee on Technology
and Procurement Policy
Committee on Government Reform
U.S. House of Representatives
Washington, D.C. 20515

Dear Mr. Chairman:

Attached are responses to the written follow-up questions from the June 13, 2001 hearing regarding the Metropolitan Area Acquisition Program before the House Subcommittee on Technology and Procurement Policy. I welcome this opportunity to provide additional information to the Subcommittee.

If you have any questions, please feel free to contact me.

Sincerely,

Daniel J. Bryant
Assistant Attorney General

DEPARTMENT OF JUSTICE

RESPONSES TO QUESTIONS FROM THE JUNE 13, 2001
HEARING ON THE METROPOLITAN AREA ACQUISITION PROGRAM
HOUSE GOVERNMENT REFORM COMMITTEE
SUBCOMMITTEE ON TECHNOLOGY AND PROCUREMENT POLICY

According to your statement, you are now successfully transitioned some of your regional locations to MAA Contracts - and in at least once case, successfully un-transitioned. Based on experiences to date, what advice would you give to other agencies that are either currently experiencing implementation problems such as you faced, or who might be reluctant to take advantage of the contracts? Based on your experiences, are there specific actions these agencies should take - with respect to GSA to their contractor, or both- that would mitigate transition risks?

Based on our experience with the MAA contracts thus far, we have expanded our list of questions that we ask GSA and/or the vendor when we evaluate whether to convert from an established dial-tone provider to a new MAA carrier. We do not suggest that these questions will eliminate all potential problems or will be applicable in each MAA situation, but they may help to minimize the types of problems we have experienced thus far.

We suggest asking the following questions at initial meetings with GSA and/or the vendor:

A. Is the MAA contractor the current dial-tone provider? If not, what is their installed base and experience level in the service area? Is there another MAA contractor for the region to compare with the one offered?

B. Is an equipment change necessary? If yes, which equipment must be changed? Who pays for each item that must be changed? Have those costs been incorporated into the cost of service calculations?

C. What are the service initiation fees and have they be incorporated into the monthly line charge? Are GSA management fees incorporated into the charge or will it be a separate line item?

D. Will telephone numbers have to be changed or will number portability be implemented?

E. What is the fall back plan if there are service problems associated with the conversion? Are there capabilities to immediately reverse a conversion? What is the amount of time GSA and the vendor have agreed to allow before the fall back plan is implemented? Who pays?

F. What is the schedule and how rigid is it?

In addition, if the MAA provider is the current dial-tone provider, we ask the following:

A. Will there be any equipment or dial-tone source changes? (new central office or new switch).

B. Will the changeover be totally transparent and be a paper billing process only, or will disconnects and reconnects be necessary?

We think it is important both the vendor and GSA have a clearly defined fallback plan in place which can be implemented rapidly if the conversion does not go well.

You note in your statement that although it is not known to you, that particular percentage of GSA's management fees is less important to you than the service that GSA provides to you. You also note that, for your regional offices, that support is essential. One suggestion being floated is the use of schedules in lieu of MAA-like contracts. What benefits would such an approach have for your office? Would you have the staff and resources to shoulder the administrative burden that would likely shift from GSA to the customer agencies under such an approach?

We should note that, when we look at the total cost of a phone line, we are less concerned with the amount of the fee charged by GSA than we are that a phone line that previously cost in the $30.00 a month range will now cost around $10.00 a month under the MAA, with a greater number of features (e.g. voice mail). While we would be interested to know the amount of the fee, that interest is not as important as the total cost savings and the value added services being provided by GSA under the MAA. Our costs per line have improved so much that the percentage of the GSA fee is minimal in actual dollars. The key is that the potential cost savings to our organization are potentially very

large while the quality of service will remain high and in real dollars, at a very low cost.

In our present circumstances, we do not forsee a great benefit to the use of schedules for MAA-like contracts. In reality, use of schedules in place of a MAA-like contract mechanism would have a potential to cause significant operational confusion in our offices. It is difficult enough to obtain reliable telecommunications services with just one provider and the introduction of multiple providers on schedule would have a high potential that more than one provider would serve an office at any given time. The result of more than one provider would be confusion. For example, if there is a problem with a specific telephone and there are multiple dial-tone providers for the office, there will be confusion as to which vendor to call for service. Adding more vendors always add to further complication of operational capabilities. The time to resolve problems would probably increase. The time to obtain new services probably would increase as well since schedules require more steps in a procurement depending on the value of the services required.

We believe the process for ordering service changes, service moves, and new services would be more complicated. Neither the individual U.S. Attorneys' offices nor the Executive Office for U.S. Attorneys have adequate staff or resources to assume the administrative, operational or management functions currently provided by GSA regionally and nationally.

How much of a factor - if any - were MAA service initiation charges in your decision to implement MAA services?

Service initiation charges (SIC) are considered during our cost evaluation. If the SIC is incorporated into the monthly line charge and spread over the life of the contract, the amount is not very significant. However, if the SIC is passed on to us up front, we have a budgeting requirement that we will look for offset in line charge savings. Most significant is the timing of a specific conversion. If the conversion is scheduled for early in a fiscal year, we would expect that the SIC will be offset throughout the year. However, if a one-time charge will fall close to the end of the fiscal year, the amount could require postponement of a conversion until the funds to reimburse the SIC are available.

July 27, 2001

The Hon. Thomas M. Davis III
Chairman
Subcommittee on Technology and Procurement Policy
Rayburn House Office Building - - Room B-349-A
Washington, D.C. 20515

Dear Congressman Davis,

Thank you for your continued efforts, and those of your staff, to improve the Metropolitan Area Acquisition (MAA) program and ensure that the promised $1.1 billion in taxpayer savings are promptly realized. Winstar appreciates the opportunity to continue to support your efforts. The attachment to this letter provides answers to the questions in your letter dated June 27, 2001, and it supplements our written and oral testimony from the MAA hearing.[1]

Several solutions to the recurring problems with the MAA program implementation are suggested.

1. 60% Transition. Move aggressively to achieve a substantial portion of the promised agency and taxpayer savings this year by **demanding that the GSA transition 60% of the forecast lines in each city by December 31, 2001.** The competitive industry, Wall Street, the customer agencies, and the taxpayers all need to see an unambiguous, publicly stated commitment from government that it is serious about delivering the promised savings from the MAA contract program. Timing is critical and jobs are at stake. Absent this simple, yet crucial commitment, the MAA program and the competitive industry will be severely damaged.

2. Establish Time Limits and Track Performance. Implement a more expedient and fair "Fair Consideration" or RFQ process in multiple award MAA cities. Improvements should include establishing reasonable time limits for both RFQ responses by vendors and GSA vendor selections, implementing a more simple and efficient process flow, insuring that specifications are expressed in technology neutral terms and otherwise insuring a level playing field. To highlight and track performance, it is imperative that GSA report the results of Fair Consideration (along with the status of service orders and line installations) in a public manner (i.e. implement the recommended Scorecard).

[1] Committee on Government Reform, Subcommittee on Technology and Procurement Policy, "Ensuring Program Goals are Met: A Review of the Metropolitan Area Acquisition Program" (Wednesday, June 13, 2001, 2pm, 2154 Rayburn House Office Building.)

3. Allow Contractors to Market Their Services. Remove the barriers to sales and service transitions by allowing the contractors to fully market their proposed solutions to the user agencies.

4. Terminate conflicting GSA local telecommunications service contract vehicles and focus on the substantial savings that MAA contracts will bring over their entire 8 year term.

Winstar is confident that if these recommendations are promptly implemented, the MAA program will become a success for all stakeholders – the GSA, the agencies, the vendors and the American taxpayers. Winstar has made and continues to make a substantial commitment to the Federal marketplace and looks forward to continuing its leadership role in promoting the success of this program. Thank you again for your efforts, those of the subcommittee, and of Melissa Wojciak and Amy Heerink on your staff.

Sincerely,

Jerry Hogge /pa

Jerry Hogge
Vice President, Government Solutions

Cc: Steve Perry, Administrator, General Services Administration
William J. Rouhana, Jr. Chairman & CEO, Winstar Communications, Inc.
Tim Graham, EVP and General Counsel, Winstar Communications, Inc.
Joseph M. Sandri, Jr., VP & Regulatory Counsel, Winstar Communications, Inc.
Melissa Wojciak, Subcommittee on Technology and Procurement Policy
Amy Heerink, Subcommittee on Technology and Procurement Policy

Attachment

Question 1:
You mention in your testimony that although the MAA contracts are uniform in their product and service content, GSA's implementation and administration of those contracts is not. Are there specific contract administration practices that should be made uniform and if so, what are they?

Answer:
Uniformity is needed in some areas and not in others. Uniform city-by-city tracking of GSA progress in transitioning is needed. Enforcing uniform product and service content is not necessarily a goal, even though it would be of great use absent the swift implementation by GSA of basic commercial business practices when administering the MAA contracts. Simplicity and commercial-like practices are what is needed in certain contract administration practices. One of the main problem areas with the implementation and administration of the contracts lies in the inconsistent Fair Consideration process.

1. *Enable post-award business by keeping Fair Consideration simple and efficient:* GSA regions should adopt simple processes for identifying sites to be evaluated and "bid" upon by MAA vendors. Simple e-mail requests and responses or simple letter-proposals should be used. MAA vendors are given five (5) business days to turn around a Fair Consideration proposal following a site survey. The MAA contracts do not specify a similar time-frame for GSA/Agency evaluation and decision. **The GSA should place and enforce a limit on the length of time a Fair Consideration proposal can remain with GSA/Agencies pending a purchase decision. Moreover, timelines for transitioning MAA business need to be instituted. At a minimum, the government must commit to transitioning 60% of all phase I and phase II MAA business by December 31, 2001.**

2. *Specify Requirements in "Services" terms - Maintain a "technology neutral" stance:* The MAAs require that service needs be expressed in terms of functional requirements (e.g. 5 Centrex phone lines with voicemail.) Accordingly, when a GSA region expresses its Fair Consideration requirements, it should not be able to change the technical requirements, or dictate that one technical solution be used (viz. a fiber optic cable is required between points 'A' and 'B'). Our experience in some instances is that the Request for Quotation (RFQ) submitted to the vendors specifies that a certain technology be used to perform the service. This is contrary to the service/functional requirement nature of the contract and causes impermissible discrimination based on technology, not service. During the Request for Qualification Statement (RQS) process, all vendors submitted technical responses as to how they would perform all of the required service requirements. Vendors were evaluated and either qualified or disqualified to be an MAA provider. As such, any company that has received an MAA contract is de facto qualified to provide MAA services in the subject MAA market. This pre-qualification in terms of technical and management merit are intended to simplify the post-award evaluation of specific service requirements for specific agencies and sites. **The GSA should prohibit the practice of expressing MAA Fair Consideration requirements in terms of specific technologies or solutions.**

3. *Uniform Reporting of Progress:* In some cases, the Fair Consideration process for a specific site has taken in excess of eight months for the GSA region and affected agencies to make a purchase decision. *For a simple price and service delivery comparison this delay is inexcusable.* This sort of delay indicates a contract administration failure. Fair Consideration can and should be a simple process. While we are not advocating that all regions be forced into a specific process for each step in making comparisons and taking decisions, there are clearly instances where the administrative process can be simplified and accelerated. With the implementation of the recommended "Scorecard,"[1] the excessive time taken to evaluate vendors in Fair Consideration would be made highly visible, allowing GSA Central Office to closely monitor and oversee the activities of the regional offices.

   A corollary benefit of this visibility will be timely and effective feedback to MAA service providers. The winner will know that they won and why *and* the losers will know that they lost and why so that they can know how to improve for future Fair Consideration contests.

[1] See attached proposed GSA Scorecard.

Question 2:
You indicate that GSA expects the MAA contractors to dedicate sales resources in each MAA City. What marketing steps do you view as the contractors' responsibility and what steps should GSA be taking to market these contracts that it is not?

Answer:
Part 1: When the actual results of the Fair Consideration process take almost a year (as it has in some cases), it is not economically feasible for a contractor to dedicate sales, program management and marketing resources in a city that is not producing any sales revenues. While it would be desirable in a steady-state environment to have dedicated resources, there needs to be a steady flow of business to cost justify those dedicated resources. Speeding up the Fair Consideration process would work to accomplish this objective.

Part 2: GSA and the contractor have the joint responsibility to educate the agencies regarding the MAA offerings and benefits and to sell these customers MAA services. Winstar's MAA contracts contain an express requirement to market the program to agencies by partnering with GSA.

In Fair Consideration cities, this is complicated somewhat by GSA's need to present several solutions to customers. In these cases, the contractor should have the ability to freely market to MAA user agencies, both in conjunction with GSA and directly as necessary. In several MAA markets, contractors are instructed not to contact customers directly but to work only through regional GSA staff. In many cases, GSA is not sufficiently staffed to commit the amount of time necessary to the sales effort and the entire process is drastically slowed. This slow process- -in combination with the requirement for local sales resources- -is a losing proposition for contractors.

The solution to this situation lies in speeding up the Fair Consideration process by making it more simple, less bureaucratic and by focusing regional GSA resources on making purchase decisions post-award. Where the regional GSA staff are insufficient to market and process the full extent of the forecast lines, then MAA vendors should be allowed to work directly with the agencies. Regional GSA should not become an impediment to transitioning business and attaining taxpayer savings.

Question 3:
You state that the use of sizeable minimum revenue guarantees could possibly be used to better establish the Government's commitment to using the MAA contracts. As you know, the first few MAA contracts – which were also among the largest – had substantial minimum dollar guarantees, but those guarantees have since been cutback substantially. How has that reduction changed your perception of the MAA business opportunity?

Answer:
For purposes of bidding on the MAA contracts, Winstar relied upon the GSA's detailed eight-year forecast of its requirements as the basis for the bargain. Winstar established a business case for each bid prior to submitting a proposal based on this expression of business. When GSA lowered the minimum revenue guarantees (MRGs) it did ***not*** lower the forecasted quantities of service used for evaluating vendor proposals. As such, we concluded that the GSA's real requirements remained unchanged.

For purposes of post-award fair consideration and transition, this reduction in the MRGs represents a key reason for the slow transition. If a larger amount of money were guaranteed to the MAA winners, then there would be a greater motivation to satisfy that minimum through the transition of business to the MAA contracts. A small MRG appears to reduce this incentive.

Regardless of the MRG level, there should be a good faith commitment by the GSA to meet the forecasted requirements in each MAA market. This is what drove Winstar to prepare bids and to provide highly competitive pricing. Had Winstar contemplated that the real forecast was to be only a small fraction of that contained in the bid models, our prices would have been significantly higher or we may have elected not to bid at all.

A good faith commitment to transition the forecast MAA business can be expressed in a more substantial MRG and will motivate the fulfillment of the government's obligation to its MAA contractors. More importantly, a more substantial MRG would, by motivating the transition of business to the MAAs, enable the enormous taxpayer savings claimed by GSA in each MAA press release. If the commitment is there, and processes are made more simple and efficient, the transition of business will naturally follow. **To aid the effort of reaching the promised savings, and to signal to the entire industry that the GSA is serious about implementing the MAA contracts, the GSA must complete the transition of 60% of the forecast lines in each city, by the end of the year.**

Question 4:
In your testimony, you cited an apparent conflict between the MAA contracts and existing incumbent contracts. Do you see these conflicts in all your award cities or is it only in the Dallas area that you cited? What related modifications, in your view, need to be made to the program to ensure that agencies are permitted to make decisions that benefit them in the long-term?

Answer:
The conflicts between the incumbent contracts and the MAA contracts exist throughout the MAA program. Dallas is simply one highly problematic example.

1. Remove the "Penalty" For Providing Government with Needed New Equipment.
The conflicts include not only the Dallas disconnect fee example identified in Winstar's testimony, but also the requirement for contractors to support proprietary phone equipment sold to the government via the incumbent's contracts. The MAA contract states that if a vendor cannot interface with the phone equipment that the agency uses, then it must replace it with like equipment. This stifles the ability of customers to obtain newer enhanced services and realize new technology efficiencies. This requirement also places the "new" contractor at a financial disadvantage because it cannot "compete" with the incumbent vendors who originally sold the customer the equipment and therefore do not need to supply new phone equipment as part of their solution.

2. Do Not Allow GSA to Issue "Cross Purpose" Contracts That Compete with MAA. GSA is keeping contracts and soliciting new contracts for services that conflict directly with the MAA contracts. For example, many of the Incumbent Providers still have Rate Stabilization Agreements (RSAs) with GSA that cover some of the MAA cities. In addition GSA Region 4 recently released a request for information for local telecommunications services for all cities in the region, including Miami and Atlanta, which are MAA cities. When the GSA has not even started transitioning business onto the Miami and Atlanta MAA contracts, we cannot understand why a new solicitation is being put out for consideration. Such practices directly damage the entire purpose of the competition and destroy the incentive of competitive carriers to bid for business. The solution is to prevent all new solicitations in an MAA award area until the GSA has demonstrated that it is respecting the MAA contract process and has transitioned a measurable and significant threshold amount of the MAA business (i.e., at least 90%) before even considering the implementation of "cross-purpose" contracts.

3. Take the IT Fund "Off the Shelf"
In order to create a level playing field for all contractors, GSA should utilize the Information Technology (IT) fund to cover the cost of transition, including such items as installation fees, disconnect fees, and any required phone equipment change-outs. This use of the fund will ignite transitions from existing services to MAA services by removing the barriers to exit created by the incumbent monopolies, and enable agency and taxpayer savings. With these unfair transition impediments removed, agencies can more clearly "compare apples to apples" in terms of the various MAA providers. Moreover, agencies will be better situated to make a vendor selection decision which is not focused on the near-

term cost issues associated with changing out proprietary phone sets or paying disconnect fees, but one that is focused on the more important issue of the long-term lifecycle cost of telecommunications services for the agency. The IT fund is underutilized and is precisely designed for this type of function.

---

[i] See attached. Winstar proposed scorecard.

RESPONSES FOR REP. TOM DAVIS
FOLLOW-UP QUESTIONS FOR JUNE 13, 2001 MAA HEARING

1. *In describing the MAA's minimum dollar guarantees in your statement, you note that – as Qwest is one of three contractors in Denver – that the $100 thousand MRG is split three ways. You also state that the amount would be further reduced if a 4th contractor were brought in. Just to clarify something, it is my understanding that the only additional contractors that might be permitted to offer MAA services would be crossover contractors, and that any additional revenues they might earn would apply toward the MRG associated with the "host" MAA contract they are crossing over from. Is that correct, or is there some other factor at play that I am not aware of?*

   Response: Qwest is not familiar with any documentation that confirms if Qwest provides crossover service in city "A" that the revenue Qwest would receive would apply to the Company's MRG in city "B." In our MAA contracts, Section H.3, Minimum Dollar Guarantee and Maximum Contract Limitations states (1) the total minimum dollar guarantee for the MAA city; and (2) the minimum dollar guarantee will be divided equally among the MAA city and the MAA contract awardee(s). It also states the maximum contract ceiling for all money paid to all contractor(s) providing telecommunications service for the particular MAA city.

   Further, unlike the FTS2001 contracts, the minimum dollar guarantee and maximum contract limitations shall be applied explicitly to the base term and all option years. The total cost of all telecommunications services provided to a city under the MAA program by all eligible contractors will not exceed the maximum contract ceiling. Thus, the maximum contracting ceiling will be shared among all eligible contractors providing services in the MAA city. The eligible contractors include the MAA contract awardee(s) and, after the one-year forbearance period, eligible contractors from another MAA city or FTS2001. Correspondingly, the maximum contract ceiling for other MAA cities and FTS2001 will be shared by eleible contractor(s) that provide telecommunications services under these programs.

2. *In your testimony, you proposed that GSA immediately reduce management fees to no more than 8 percent. What specific recommendations do you have for GSA to streamline its organization and processes to meet this target? How have GSA's management fees affected your ability to market MAA services to customer agencies?*

   Response: With regard to GSA's organizational streamlining, GSA should manage the entire FTS program as a single integrated unit with multiple facets. As such, the activities of the Transition Control Center would be broadened to

include and consider the MAA related transitions as part of the integrated planning that takes place on behalf of agencies and all affected contractors. Likewise, the cost of managing the MAAs would be part of the overall cost of providing the FTS portfolio of services – FTS2001, the niche contracts and the MAAs – to the agencies. This approach would force integration and reduce the ultimate price to the agencies for services.

Secondly, Qwest recommends that GSA define their "value proposition" related to voice products/services and relate it to their increased Contract Management Fee. Qwest has consistently and significantly lowered their costs to GSA, yet GSA has choked the gap with their overhead fees. In some instances, the agency customers have a much better arrangement without the MAA. Indeed, savings can be transmitted to the agency, but is overhauled by GSA.

With respect to sales, all GSA regional offices within Qwest territory apply a full-service fee, however, the contract states (Section G.3.7) that "The contractor shall market and promote the services, system features, and capabilities provided through this contract to customer organizations as part of service provisioning." Additionally, in Section F of the RFP, the contractor is required to submit a marketing plan, which includes how the contractor will conduct demonstrations and briefings for existing and potential customers.

Qwest's contract allows us to market directly to the federal agencies with no MAA mark-up, but in Minneapolis, for instance, Qwest has been instructed by GSA to not approach the agencies directly. Instead, GSA has requested joint meetings, thus utilizing additional resources. Another example is Albuquerque, where the GSA has asked Qwest to bring new business directly to GSA. In Denver, GSA advised Qwest not to visit agencies directly and has, furthermore, declined joint meetings due to multiple award contractors and to prevent "fair consideration" issues.

With respect to repair, with the exception of Qwest MAA in Albuquerque, the GSA regions have stated their preference that the agencies directly place calls to Qwest with repair issues, removing GSA completely out of the picture.

With respect to billing, Qwest prepares and bills GSA directly including their Contract Management Fees. Currently, GSA has not allowed direct billing to the agencies, thus GSA continues to conceal their fees.

Since the life cycle of the sale and service is incumbent on the contractor, I do not see the value added service performed and substantiated by GSA. The only value-added service Qwest can identify is in Minneapolis. The GSA office utilizes the software configuration systems, which allows the regional office to complete moves, adds and changes of Centrex services for their agency customers, thus eliminating Qwest's obligation to issue these orders.

Given these examples, my recommendation is for GSA to restructure themselves as commercial companies and redefine their "value proposition."

The increased Contract Management Fee is difficult to define when in most cases they apply 30 percent. As an incumbent, when embedded-based services are already installed and transition is minimal, the 11% increase cannot be defended.

Finally, selling has been challenging when in most cases the Contract Management Fee loaded on top of the MAA rate is equal to Qwest's commercial tariff rate. As a result the end user agencies experience no price reduction at all with any possible savings being absorbed by and used by GSA. The differentiation would be the GSA billing method and limited cost savings to the agencies.

3. *In your testimony, you suggest the high percentage of contract management fees and full service fees are barriers to transition, GAO suggests that the fees in dollar value are actually much lower than before the MAA program. If this statement bears out, isn't it more important that greater transparency exist rather than reducing the fees overall?*

Response: GAO is technically correct in asserting that the fees in dollar value are much lower than before the MAA program. What they fail to note in that statement, however, is that the commercial tariff rates have also continued to decline. Thus, the rate that the agency actually pays is no lower than they would be able to achieve on the open market. While greater transparency is a stated objective of Qwest, the broader issue remains the overall price of service to the agencies.

The only issue preventing transition from a Contract Management Fee perspective has been the GSA regional office inability to determine that fee. Qwest most sees the issues surrounding the lace of transition as: (1) the fair consideration process; (2) the GSA regional office misconception of the contracts; (3) TOPS/billing issues; and (4) the absence of funding from the GSA national office to cover transition costs.